# Transmittal of Drawings

**DATE: June 11, 2015**

| | | | |
|---|---|---|---|
| **CSI Job #** | **C22312** | **Submittal No:**<br><br>**Revision No:** | C22312 - Submittal-002217 - BC/CS-BOX CULVERT W/CS WW |
| **Attn:** | Mr. Jay Lafontaine<br>(jlafontaine@gwtatro.com)<br>Phone: (802) 644-8875; Fax: (802) 644-5020<br>Mr. Cody Marsh<br>(cmarsh@gwtatro.com)<br>Phone: (802) 644-8875; Fax: (802) 644-5020 | **Owner:** | |
| **Customer Name:** | G W Tatro Construction Inc<br>Jct Rtes 15 & 108, Jeffersonville, VT 05464 | **Engineer:** | |
| **Project:** | VT/DOT Bridge Replacement - Roadway Improvements TH 3 FAS 0302 in RICHFORD, VT | **Project No /**<br>**Contract No(s):**<br>**Federal Aid No(s):** | BRF030229 / |

| | |
|---|---|
| **Reason for submittal: For your files and distribution** | |
| **Enclosed herein please find submittal for:** | **1 copy of shop drawings;1 copy of Layout drawing** |
| LO1A-B, C1-F5 | |
| ***After your review:*** | ***For approval return 1 copy for our files*** |

***Standard Submittal Remarks:*** **The following is included: 1 copy of LO1A-B (Rev 3) LAYOUT, C1-WW4 (Rev 3) SHOP**

***Revision Remarks:*** **5/20/15 R1- Revised, moved WW4. added F3A,F3B, rev GA**
**5/29/15 R2- Revised, sect C-10" Dim was 9 1/2, exted WW even with HD**
**6/11/15 R3- Revised per customer review**

Respectfully submitted,
Concrete Systems, Inc.

Stivale Saavedra
(ssaavedra@csigroup.com), Extn: 471
Engineering Assistant


9 Commercial Street, Hudson, New Hampshire 03051 Phone (603) 889-4163
Fax Number: Precast Sales (603) 889-0039
Fax Number: Shipping, Manhole Design and Engineering (603) 889-2417
***CSI Group Web Site:*** www.csigroup.com

Drafter: Ray Yeager, AutoCAD Technician (ryeager@csigroup.com), 800-342-3374, Ext 472 - Prepared by: SSaavedr

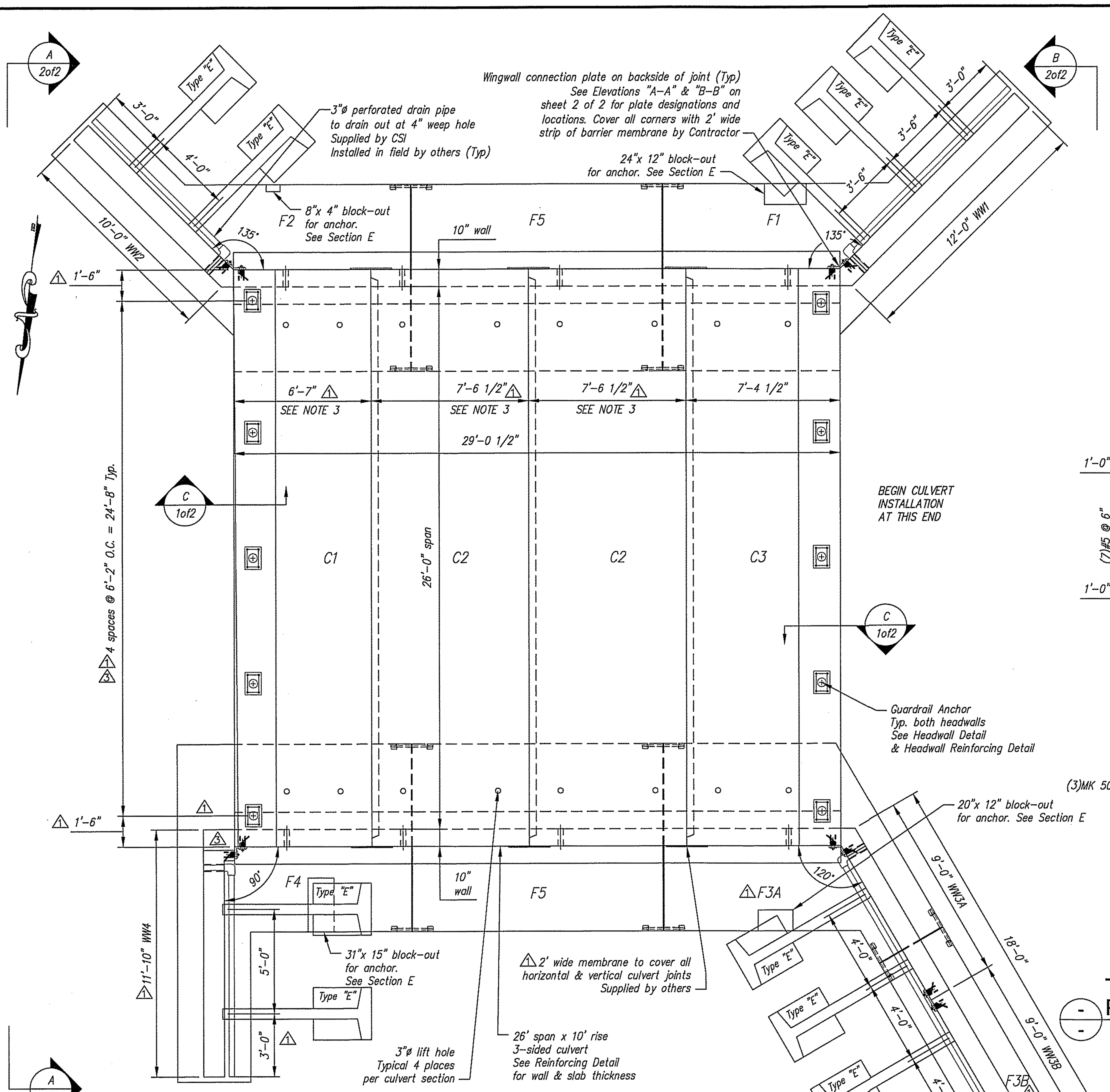


## PLAN VIEW

Scale: 1/4" = 1'-0"

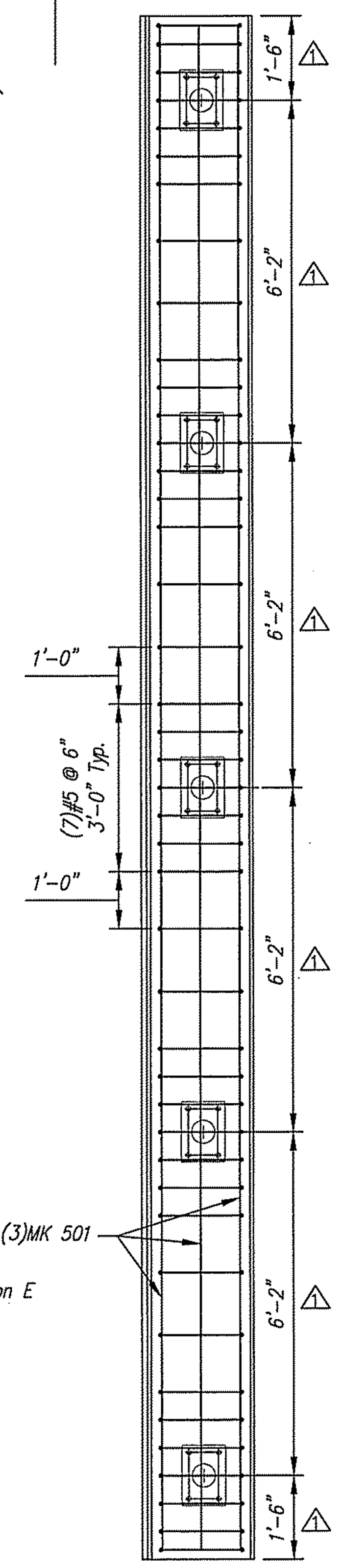


## TYPICAL HEADWALL REINFORCING DETAIL

Scale: N.T.S.

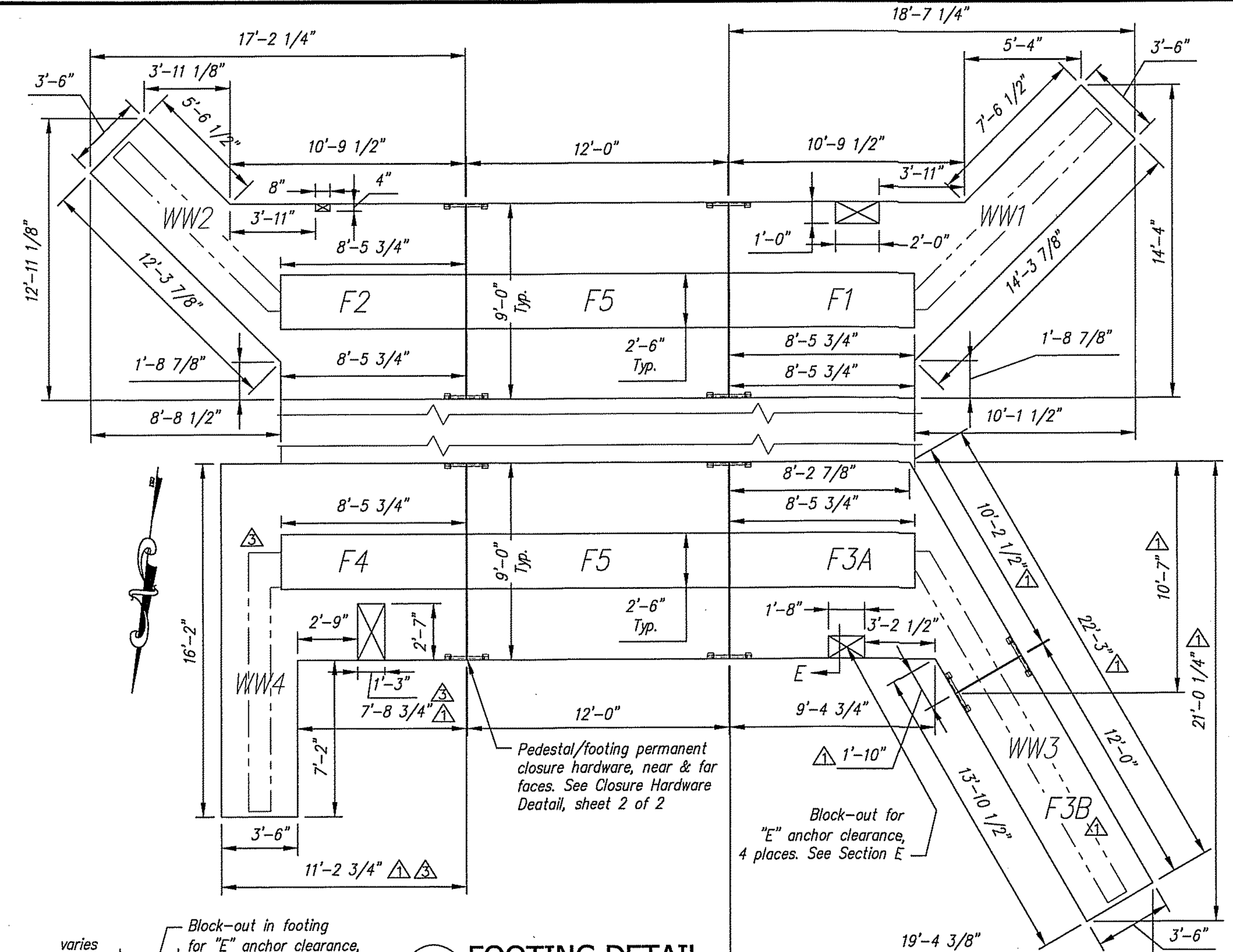


## FOOTING DETAIL

Scale: N.T.S.

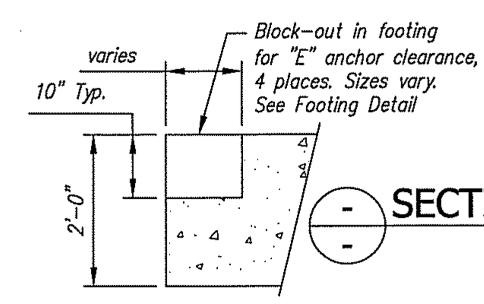


## SECTION E

Scale: N.T.S.

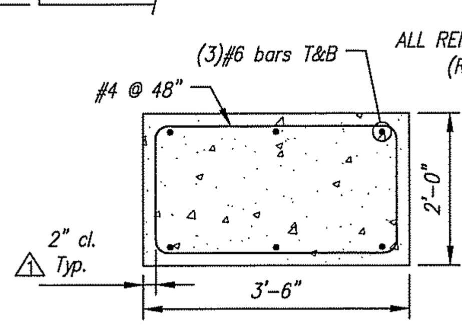


## WINGWALL FOOTING REINFORCING DETAIL

Scale: N.T.S.

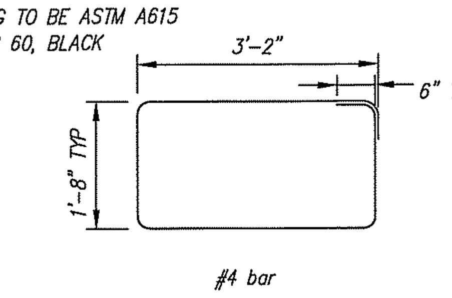


## BENDING SCHEDULE

Scale: N.T.S.

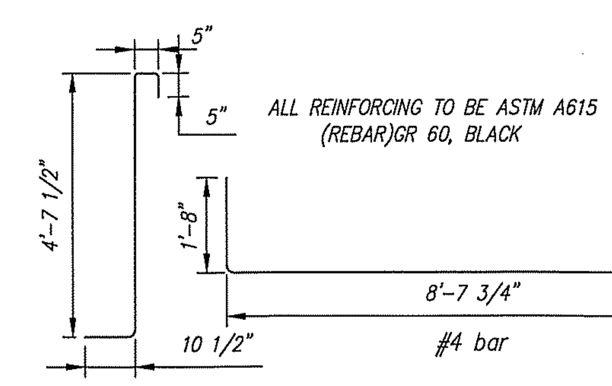


## BENDING SCHEDULE

Scale: N.T.S.

GENERAL NOTES:

1. Reference Standards:
   AASHTO "LRFD Bridge Design Specifications"
   ASTM C1577
2. Design Parameters:
   Live load: HL-93
   Earth Cover: 0.5' to 1.0'
   Concrete: Design strength f'c = 5000 psi
   Unit weight = 150 pcf
   Reinforcing: Pedestal/Footing – ASTM A615 (rebar) GR 60, plain(VTAOT Level I)△1
   Culvert/Headwall/Wingwall – Z-Bar(rebar), GR 60(VTAOT Level II)
   Soil: Unit weight = 140 pcf
   Minimum lateral pressure coefficient .25
   Maximum lateral pressure coefficient .50
   Cover to reinforcing: 2" Top of top slab & outside faces of walls
   1 1/2" elsewhere u.n.o.
3. Dimensions include a joint gap. Actual culvert piece length is ½" shorter (i.e. C2 = 7'-6").
4. DBS are Dowel Bar Splicers and DI are Dowel Ins. Both are supplied by CSI. DI's are to be installed and cut/bent in the field by others as required.
5. Headwall design taken from contract drawing S-360A.
6. Water repellant by CSI on all exposed faces of culvert to 1' in, headwalls and △1△3 wingwalls. Water repellant to be Silane-Siloxane in accordance with Vtrans 540.04.
7. Provide engineer a minimum fourteen (14) days notice prior to the start of fabrication and a detailed casting schedule.

△2 CULVERT PIECE SCHEDULE (MX-FA5000SC30)

| MARK | QTY | LENGTH | YDS | WEIGHT | |
|---|---|---|---|---|---|
| C1 | 1 | 6.54 ' | 15.40 | 31.19 | TONS |
| C2 | 2 | 7.50 ' | 15.20 | 30.78 | TONS |
| C3 | 1 | 7.38 ' | 16.50 | 33.41 | TONS |
| WW1 | 1 | 12.00 ' | 7.77 | 15.73 | TONS |
| WW2 | 1 | 10.00 ' | 6.35 | 12.86 | TONS |
| WW3A | 1 | 9.00 ' | 6.03 | 12.21 | TONS |
| WW3B | 1 | 9.00 ' | 5.31 | 10.75 | TONS |
| WW4 | 1 | 11.83 ' | 8.13 | 16.46 | TONS |
| F1 | 1 | 18.58 ' | 11.37 | 23.02 | TONS |
| F2 | 1 | 17.17 ' | 10.85 | 21.97 | TONS |
| F3A | 1 | 13.33 ' | 9.80 | 19.85 | TONS |
| F3B | 1 | 12.00 ' | 3.11 | 6.30 | TONS |
| F4 | 1 | 16.17 ' | 11.70 | 23.69 | TONS |
| F5 | 2 | 12.00 ' | 11.19 | 22.66 | TONS |

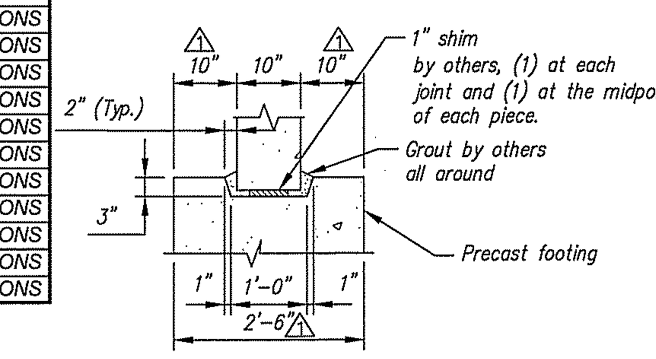


## KEYWAY DETAIL

Scale: N.T.S.

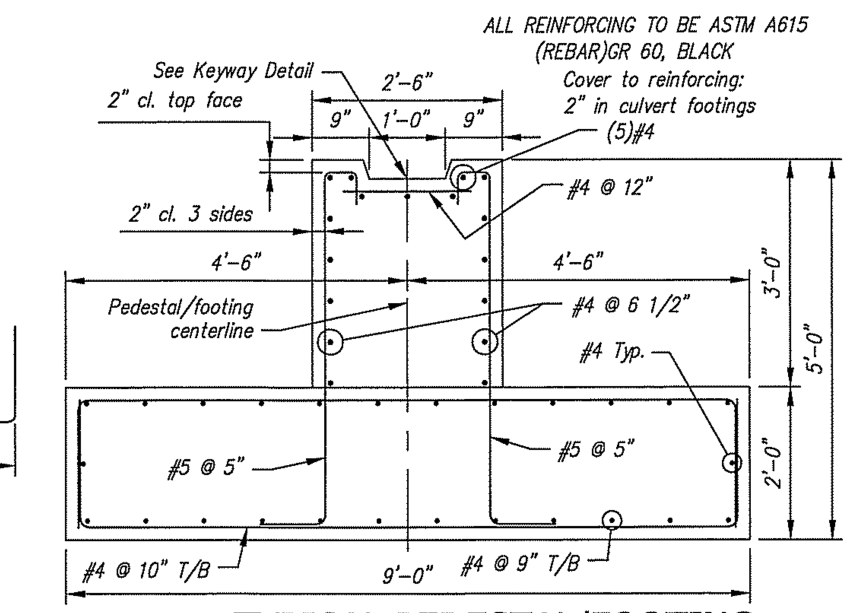


## TYPICAL PEDESTAL/FOOTING REINFORCING DETAIL

Scale: N.T.S.

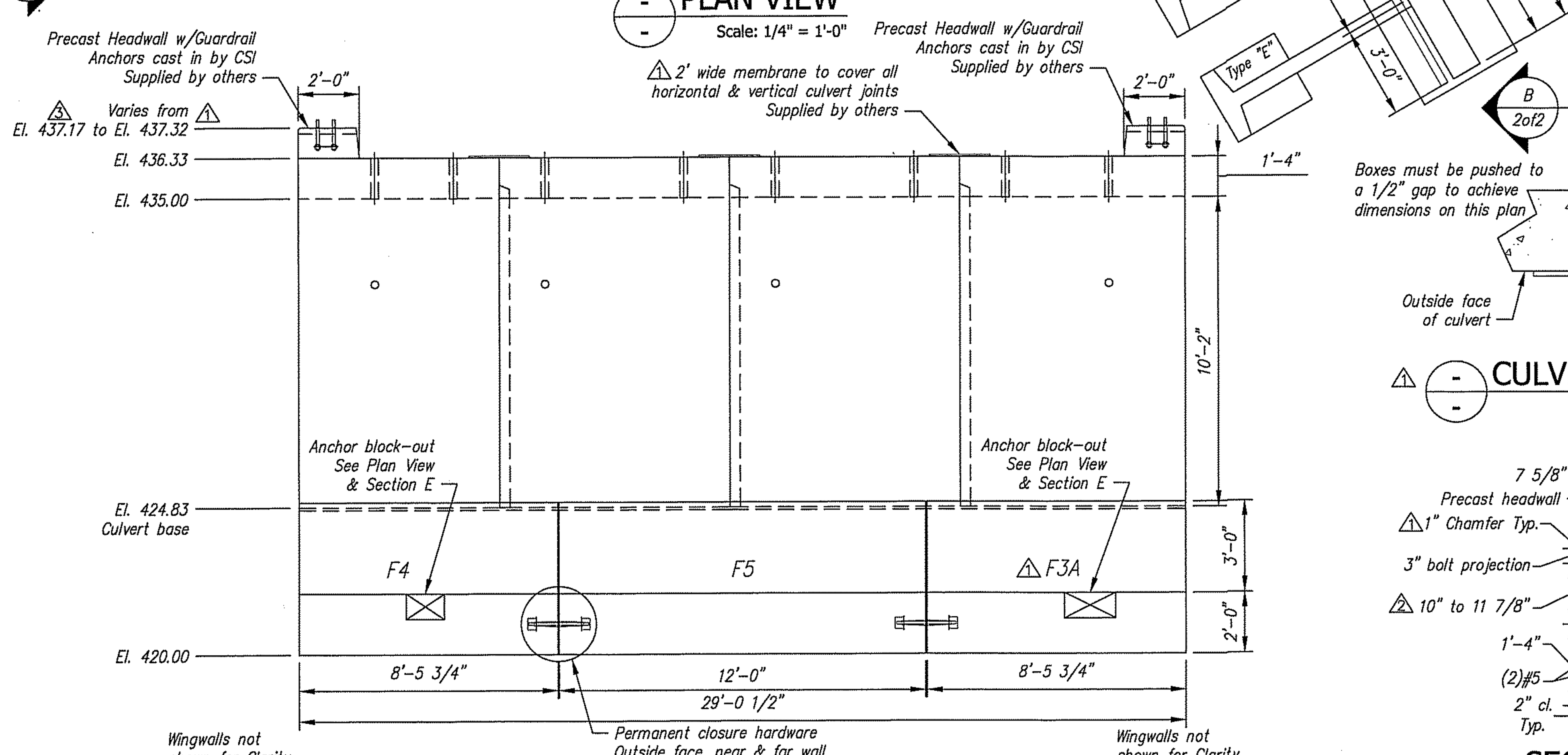


## ELEVATION

Scale: 1/4" = 1'-0"

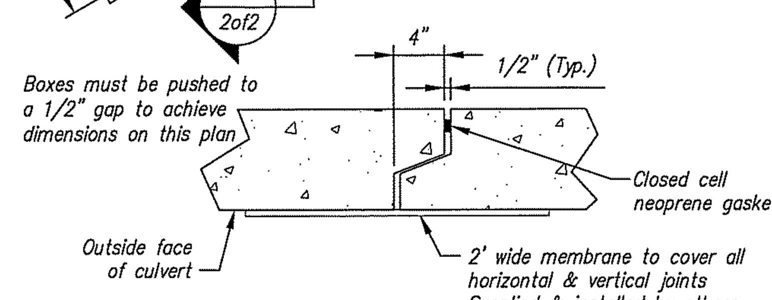


## CULVERT JOINT DETAIL

Scale: N.T.S.

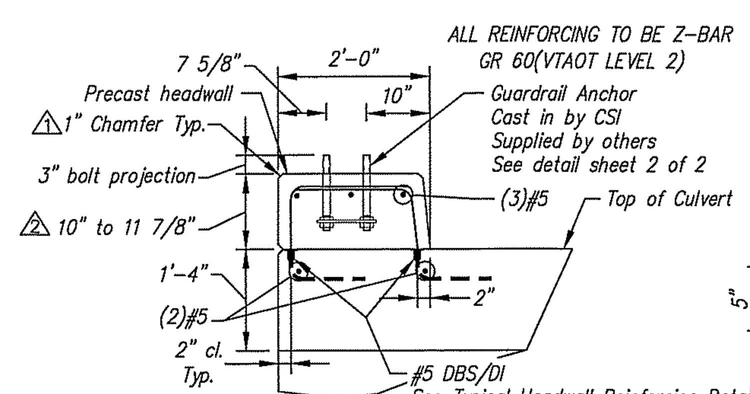


## SECTION C TYPICAL HEADWALL DETAIL

Scale: N.T.S.

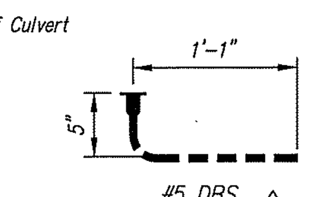


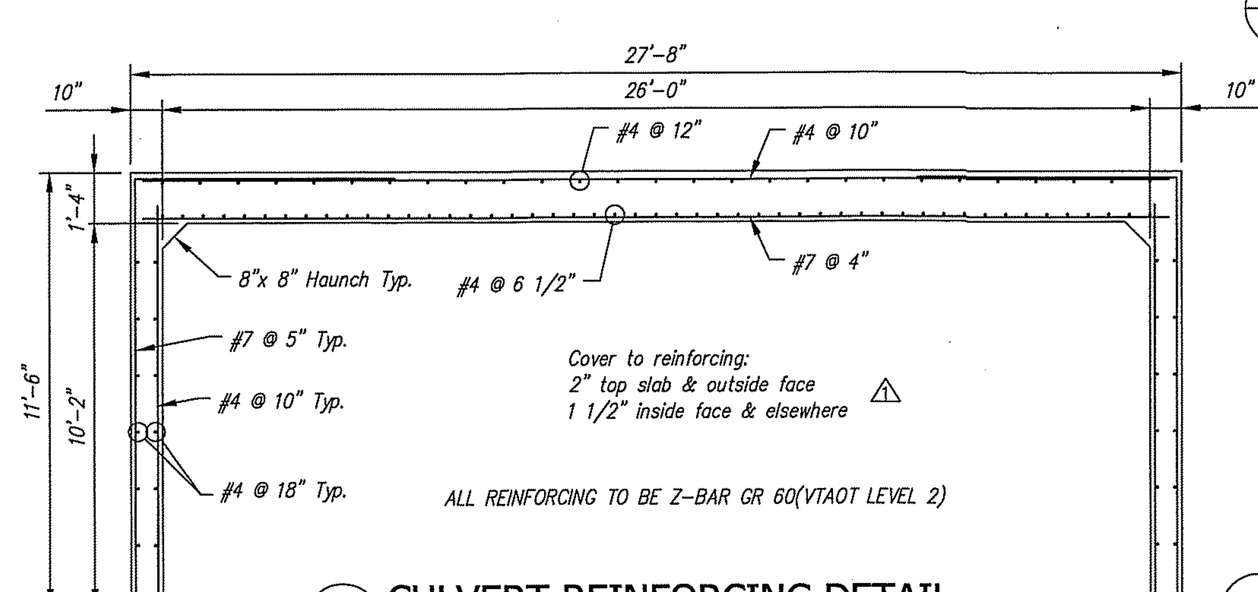


## CULVERT REINFORCING DETAIL

Scale: 3/8" = 1'-0"

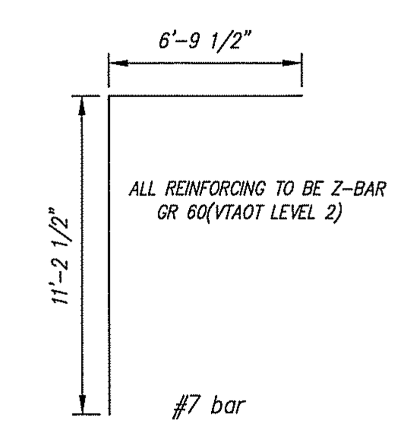


## BENDING SCHEDULE

Scale: N.T.S.

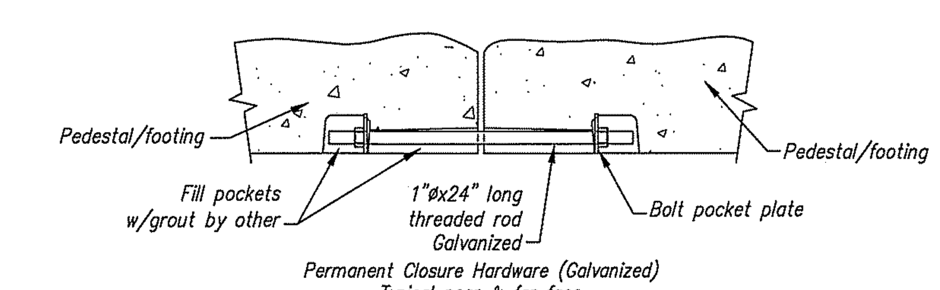


## SECTION D-D

Scale: N.T.S.

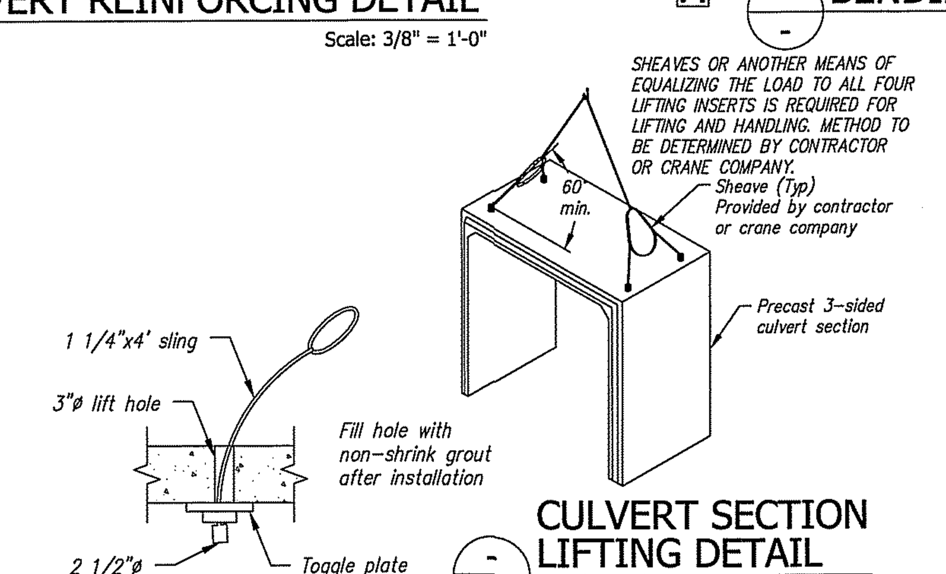


## CULVERT SECTION LIFTING DETAIL

Scale: N.T.S.

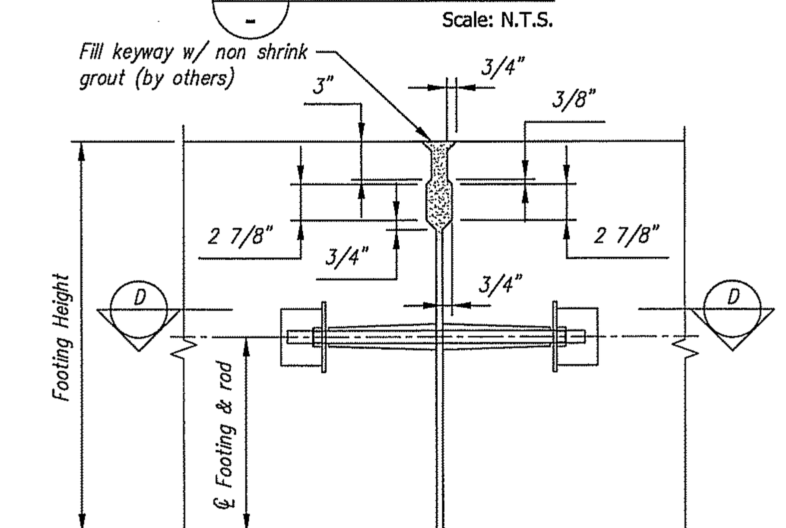


## CLOSURE HARDWARE DETAIL

Scale: N.T.S.

Contractor is to verify that all information shown on drawings has been thoroughly checked, complies with the contract documents and is adequate to meet the field conditions. Some dimensions and details may differ slightly from contract drawings to accommodate the manufacturing or design process. Approval of this drawing indicates that any deviation from the contract documents has been reviewed and found to be acceptable. Production will not commence until receipt of signed, approved shop drawings.

This drawing contains information proprietary to CONCRETE SYSTEMS, INC. This drawing is disclosed with the understanding that it will be retained in confidence and its use limited solely to the purpose for which it is disclosed. It is understood that no reproduction of this drawing is authorized without permission from CONCRETE SYSTEMS, INC. and that it will be returned to CONCRETE SYSTEMS, INC. upon request.

STATE OF VERMONT CHRISTOPHER M. WICK NO. 77828 Structural LICENSED PROFESSIONAL ENGINEER
6/11/15
Stamp for structural design only

| Rev. | Date | DESCRIPTION | By |
|---|---|---|---|
| 7 | | | |
| 6 | | | |
| 5 | | | |
| 4 | | | |
| 3 | 04JUN2015 | REVISED PER CUSTOMER REVIEW | RY |
| 2 | 28MAY2015 | REVISED PER CUSTOMER REVIEW, SECTION C-10" DIM WAS 9 1/2", EXTENDED WINGWALLS EVEN WITH HDWALL | RY |
| 1 | 14MAY2015 | REVISED PER CUSTOMER REVIEW, MOVED WW4, ADDED F3A & F3B, REVISED GUARDRAIL ANCHORS | RY |

REVISIONS

This drawing is based upon information provided from the following documents and/or sources:
Engineer: STATE OF VT/AOT PROGRAM DEVELOPMENT
Project No: ----
Drawings: STATE OF VT/AOT PROPOSED IMPROVEMENT BRIDGE PROJECT, TOWN OF RICHFORD SHEETS 1,2,4,22,23,24 OF 36
Specifications: STANDARD SPECIFICATIONS FOR CONSTRUCTION DATED 2011 ----
Other Sources: ----

Concrete Systems Inc.
9 Commercial St., Hudson, NH,03051
Phone 603-889-4163
Fax 603-889-2417

STATE AGENCY
VTrans

Drawn By R. YEAGER Date 31MAR2015
Reviewed By B. KOLAWOLE Date
Approved By Date

G.W. TATRO CONSTRUCTION, INC.
VT/AOT BRIDGE REPLACEMENT– ROAD IMPROVEMENT
RICHFORD, VT.

D | 26' SPAN X 10' RISE 3-SIDED CULVERT | REV 3
Drawing No. C22312-L01A
Quantity: 1 | Project No: BRF030229 | SHEET 1 OF 2

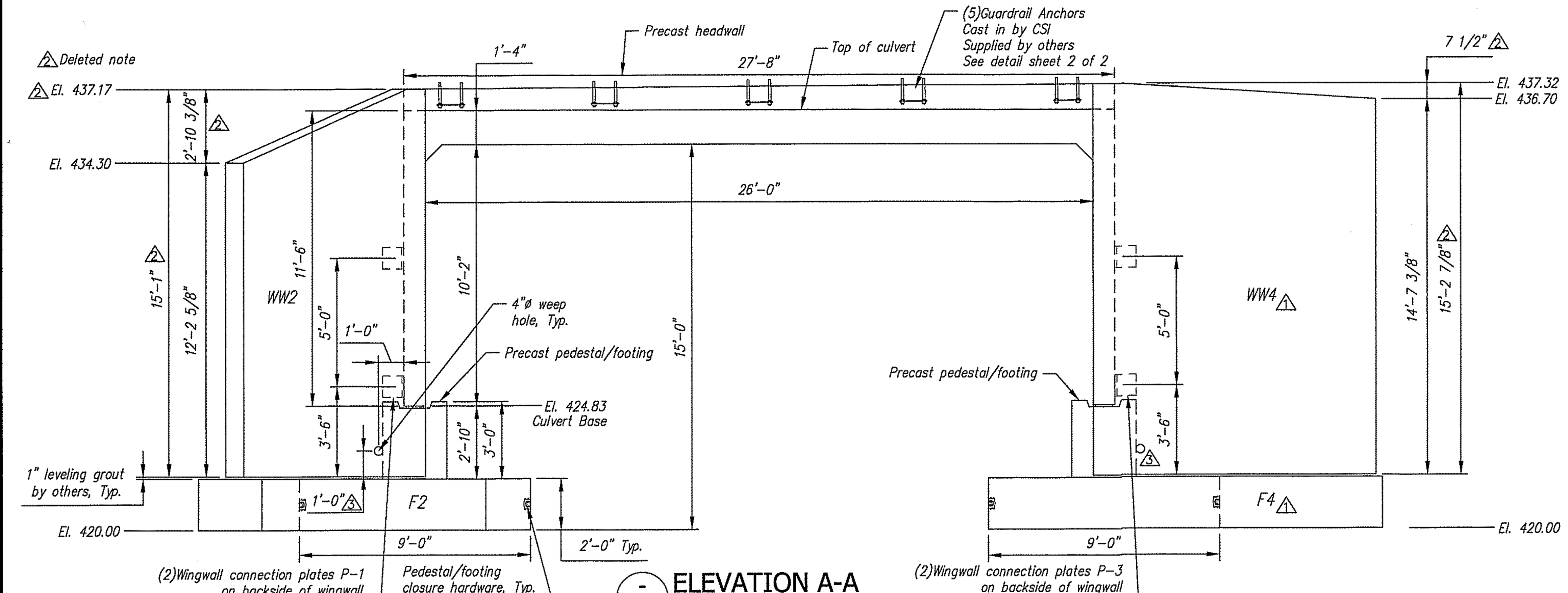


## ELEVATION A-A
Scale: 1/4" = 1'-0"

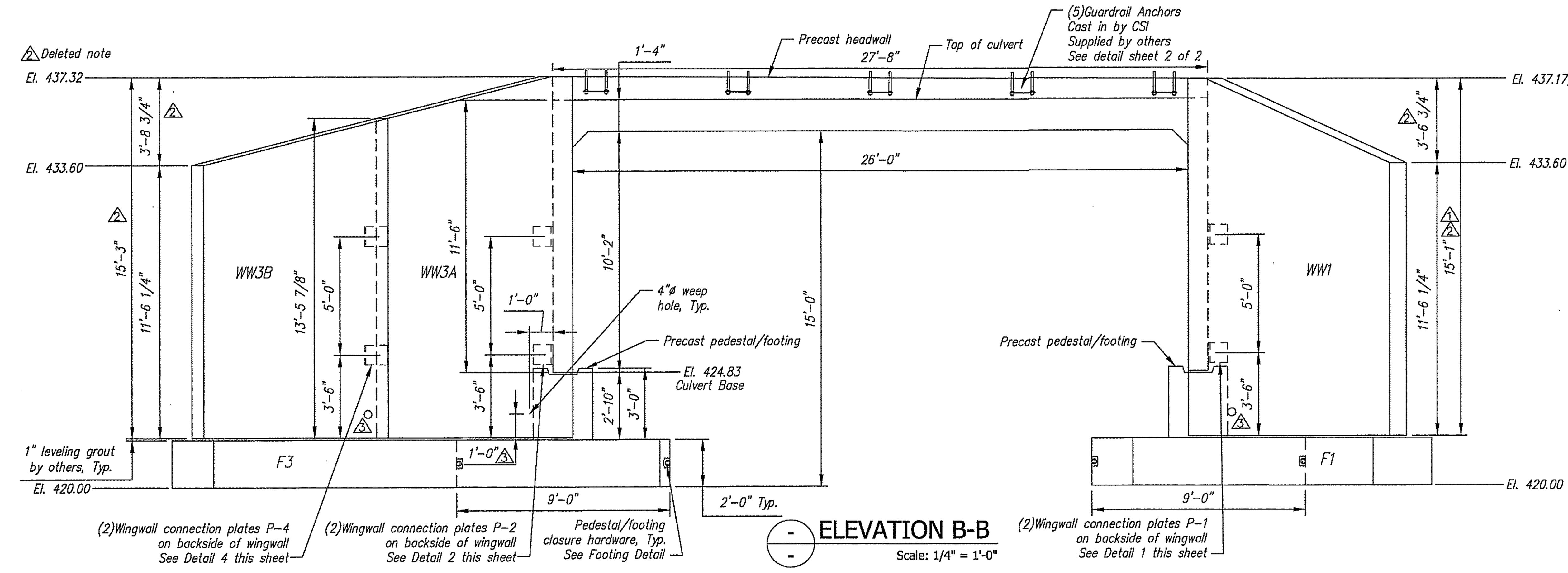


## ELEVATION B-B
Scale: 1/4" = 1'-0"

WINGWALL GENERAL NOTES:
1. Reference standard:
   AASHTO LRFD Specifications
2. Design Parameters:
   Nominal Bearing Resistance: 10 ksf (Footing width > 6ft.)
   Earth Cover: 1.0'±
   Concrete: Design strength f'c = 5000 psi
   Unit weight = 150 pcf
   Reinforcing: Z-BAR(rebar), GR 60(VTAOT Level II)
   Soil: Unit weight = 125 pcf
   Minimum lateral pressure coefficient .25
   Maximum lateral pressure coefficient .50
   Cover to reinforcing: 2" u.n.o.
3. The wingwalls have been designed for general site conditions. The project engineer shall be responsible for the structure's suitability to the existing site conditions and for the hydraulic evaluation, including scour and confirmation of soil conditions.
4. Prior to construction, contractor must verify all elevations shown through the engineer.

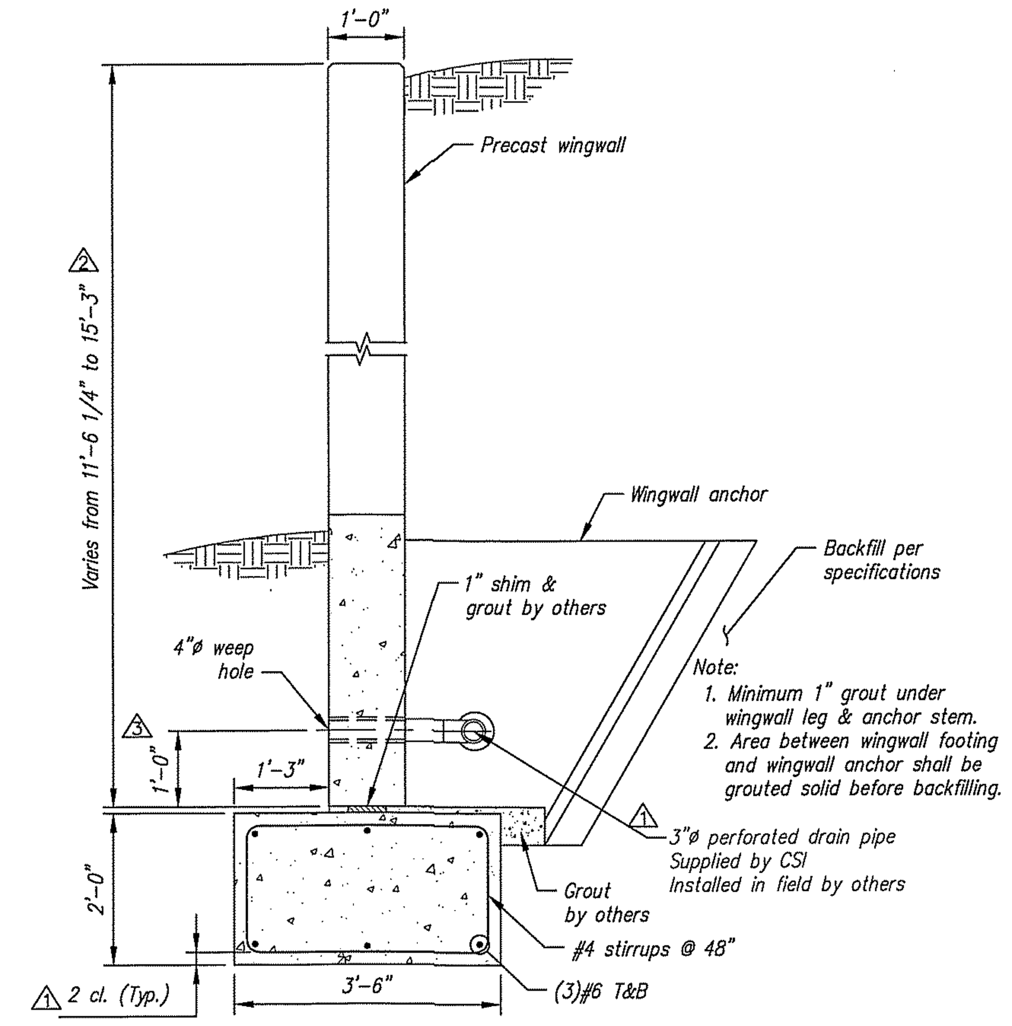


## TYPICAL WINGWALL DETAILS
Scale: N.T.S.

| BACKFILL DESCRIPTION | | | | | | | |
|---|---|---|---|---|---|---|---|
| Group Classification | A-1 A-1-a | A-1 A-1-b | A-3 | A-2 A-2-4 | A-2 A-2-5 | A-2 A-2-6 | A-2 A-2-7 |
| Sieve Analysis, Percent Passing | | | | | | | |
| No. 10 | 50 max. | | | | | | |
| No. 40 | 30 max. | 50 max. | 51 min. | | | | |
| No. 200 | 15 max. | 25 max. | 10 max. | 35 max. | 35 max. | 35 max. | 35 max. |
| Characteristics of Fraction Passing No. 40 | | | | | | | |
| Liquid Limit | | | | 40 max. | 41 min. | 40 max. | 41 min. |
| Plasticity Index | 6 max. | | N.P. | 10 max. | 10 max. | 11 min. | 11 min. |
| Usual Types of Significant Constituent Materials | Stone Fragments, Gravel & Sand | | Fine Sand | Silty or Clayey Gravel and Sand | | | |
| General Rating as Subgrade | Excellent to Good | | | | | | |

NOTES
1. BACKFILLING OPERATIONS WITHIN THE C.B.Z. SHALL BE PERFORMED IN LIFTS OF 8" OR LESS (LOOSE DEPTH).
2. MAXIMUM DRY DENSITY SHALL BE DETERMINED BY AASHTO T-99 OR OTHER APPROVED METHODS.
3. BACKFILL SHALL BE COMPACTED IN LAYERS UNTIL THE DENSITY IS NOT LESS THAN 95% OF THE MAXIMUM DRY DENSITY.

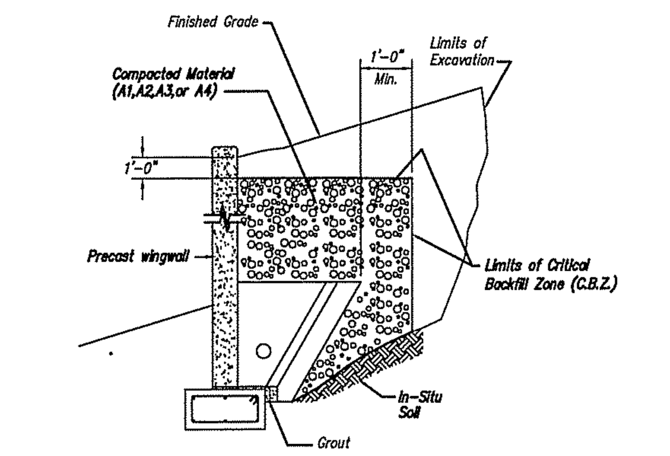


WINGWALL BACKFILL REQUIREMENTS

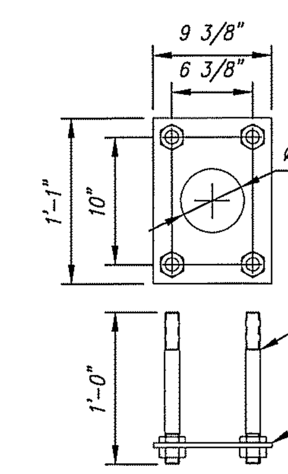


Reference VT/AOT drawing
Standard S-360A

## GUARDRAIL ANCHOR DETAIL
Scale: N.T.S.

ALL REINFORCING TO BE Z-BAR
GR 60(VTAOT LEVEL 2)

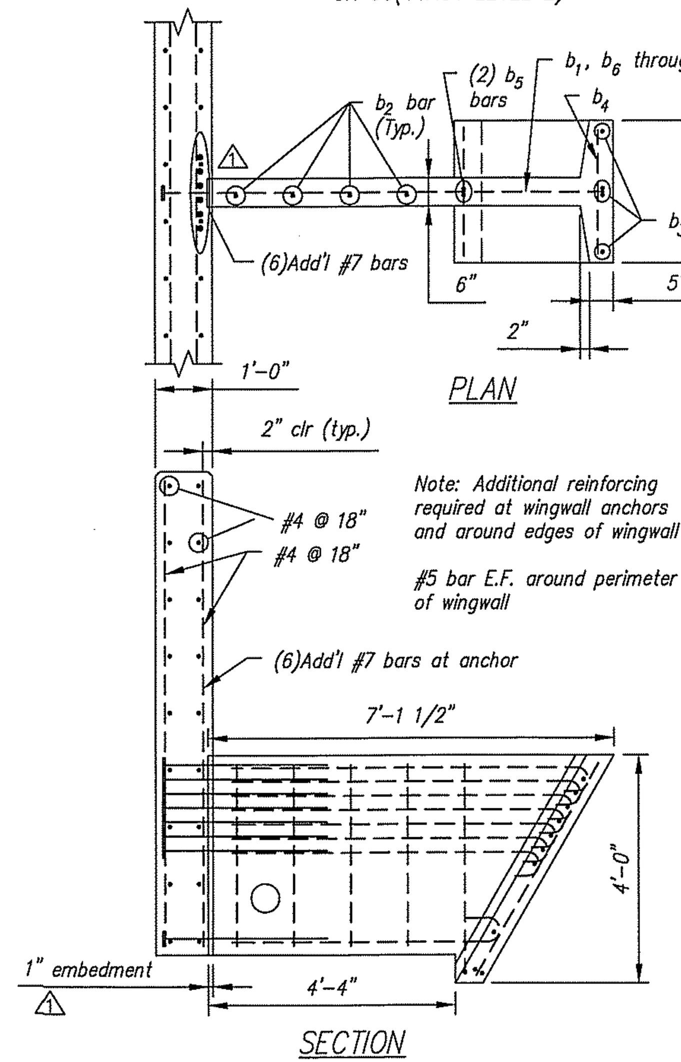


| BAR LIST | | | | | |
|---|---|---|---|---|---|
| MARK | QTY. | SIZE | a | TYPE | LENGTH |
| $b_1$ | 8 | #6 | 3'-0" | 3 | —— |
| $b_2$ | 4 | #5 | —— | Str. | 3'-2" |
| $b_3$ | 4 | #5 | —— | Str. | 4'-3" |
| $b_4$ | 11 | #5 | —— | Str. | 2'-2" |
| $b_5$ | 2 | #5 | 3'-8" | 2 | —— |
| $b_6$ | 1 | #5 | 4'-9" | 1 | —— |
| $b_7$ | 1 | #5 | 5'-4" | 1 | —— |
| $b_8$ | 1 | #5 | 5'-6" | 1 | —— |
| $b_9$ | 1 | #5 | 5'-8" | 1 | —— |
| $b_{10}$ | 1 | #5 | 5'-10" | 1 | —— |
| $b_{11}$ | 1 | #5 | 6'-0" | 1 | —— |
| $b_{12}$ | 1 | #5 | 6'-1" | 1 | —— |
| $b_{13}$ | 1 | #5 | 6'-3" | 1 | —— |

Note: "Str." denotes straight bar.
Standard clearance = 2"

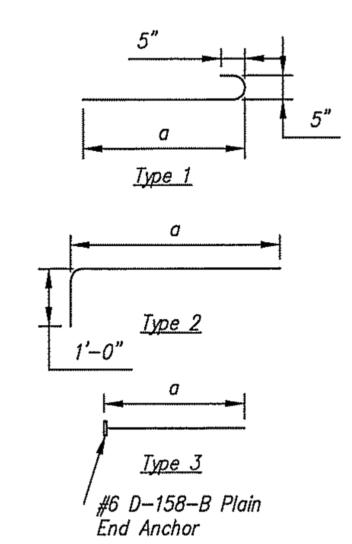


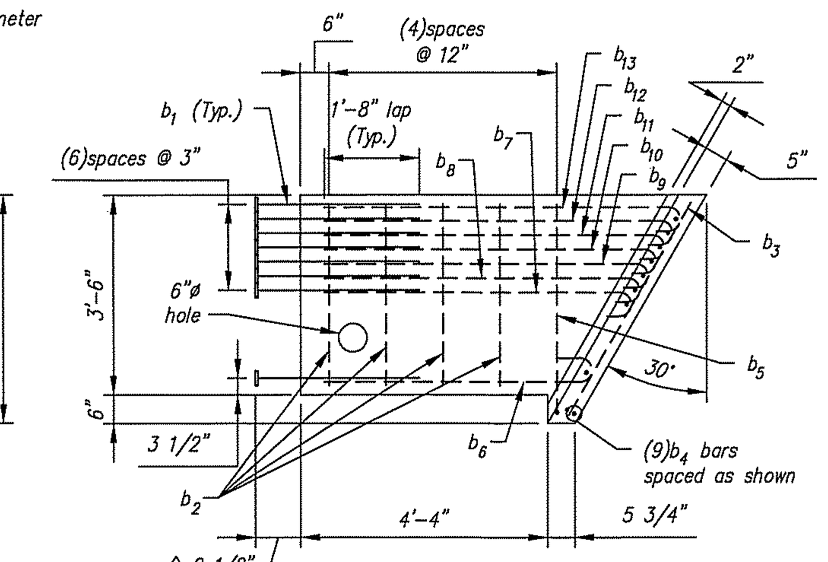


PRECAST ANCHOR
TYPE E

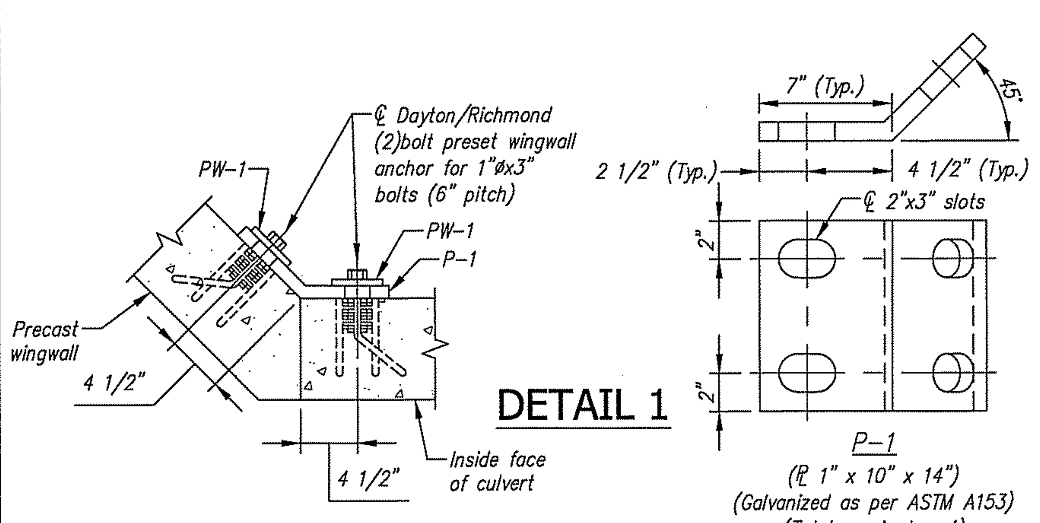


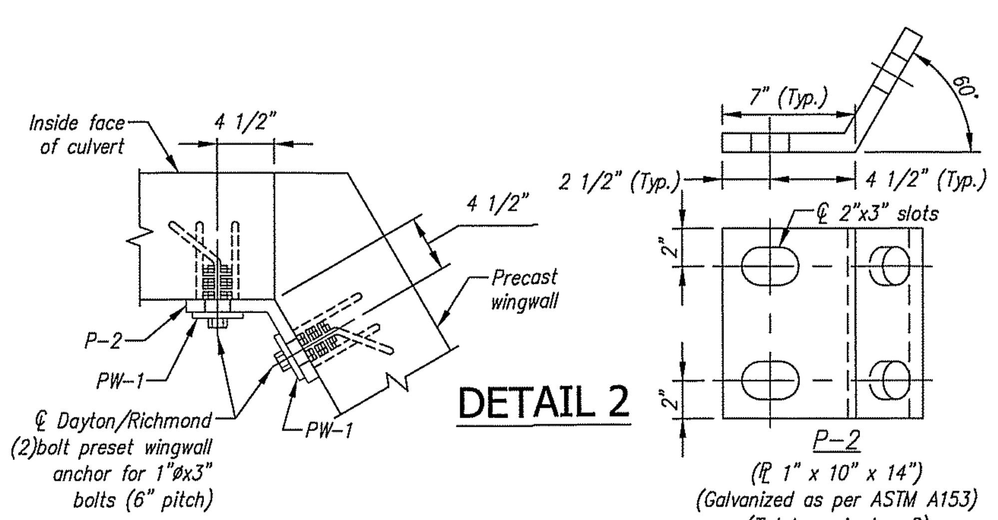


## WINGWALL CONNECTION PLATE DETAILS
Scale: N.T.S.

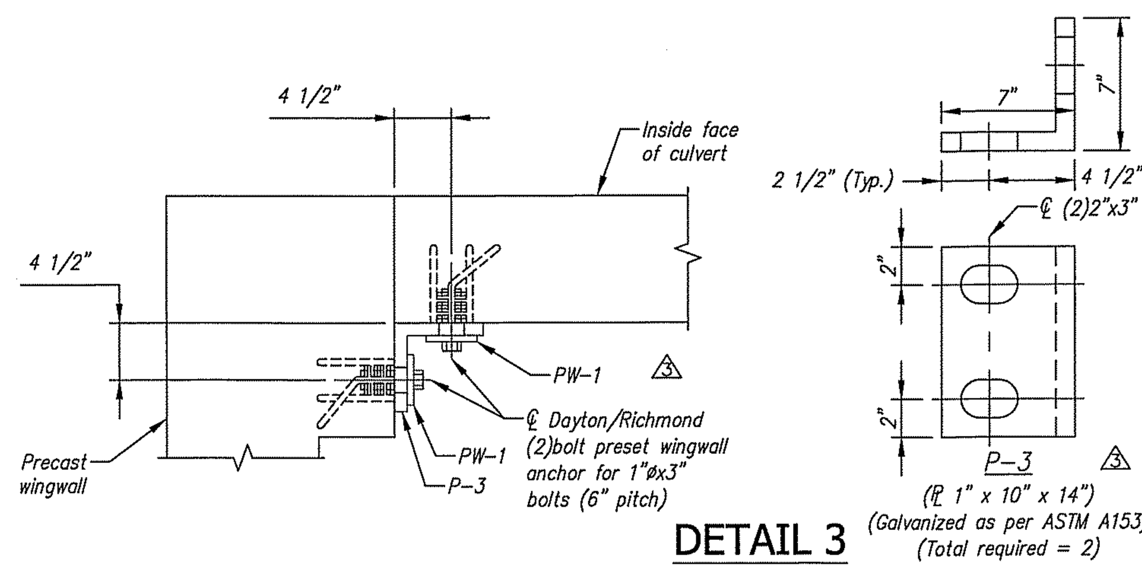


Note: All wingwall joints are covered with 2' wide strip of barrier membrane by others. See note, Sheet 1, Plan View.

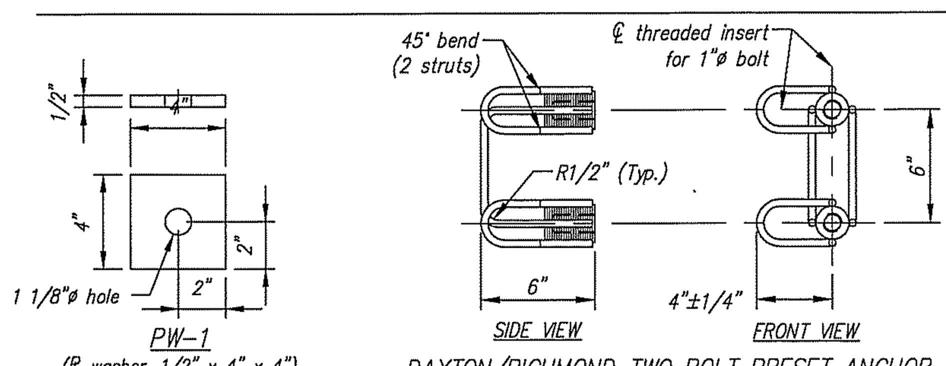


DAYTON/RICHMOND TWO BOLT PRESET ANCHOR
Anchors and bolts are electro-zinc plated

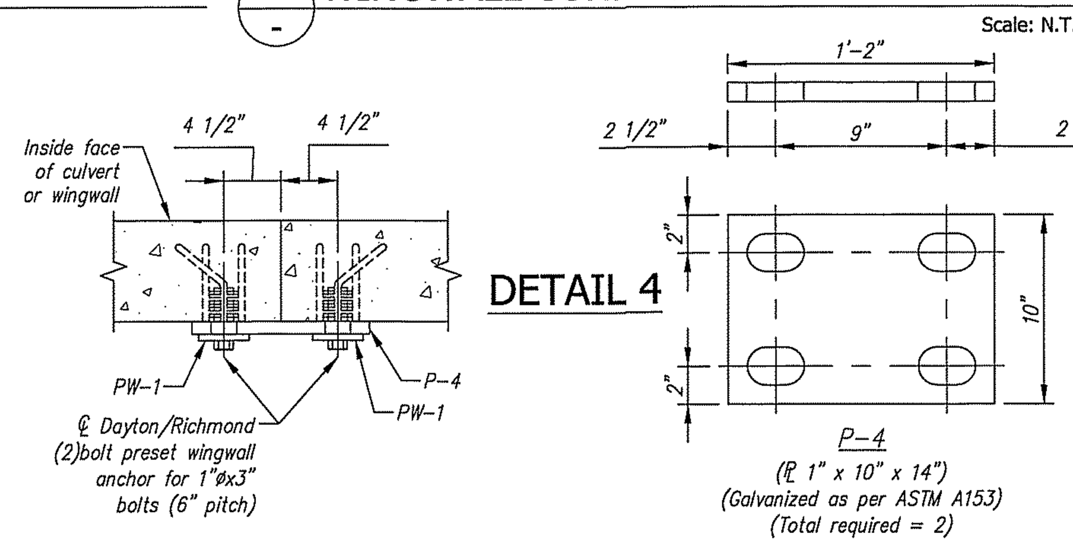


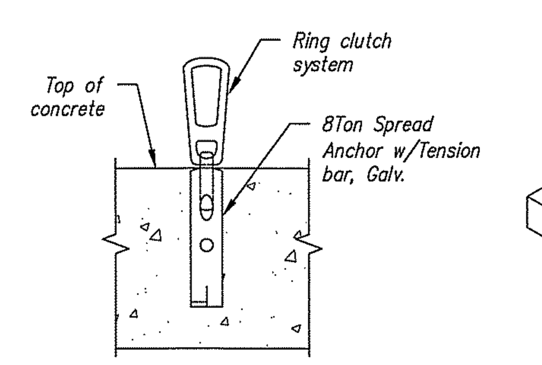


## FOOTING LIFTING HARDWARE DETAIL
Scale: N.T.S.

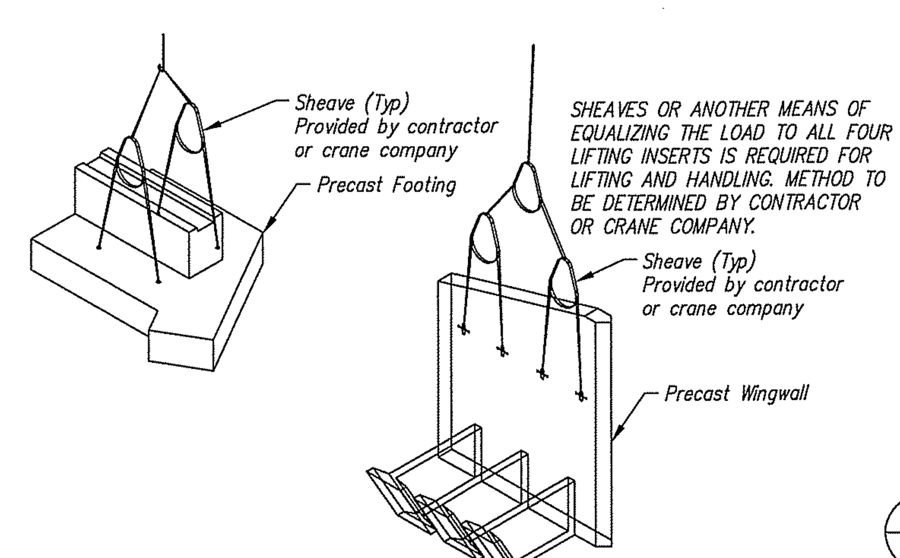


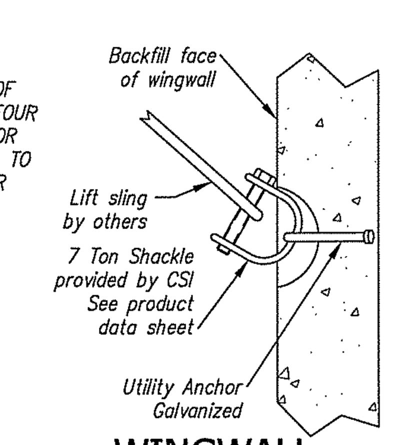


## WINGWALL LIFTING DETAIL
Scale: N.T.S.

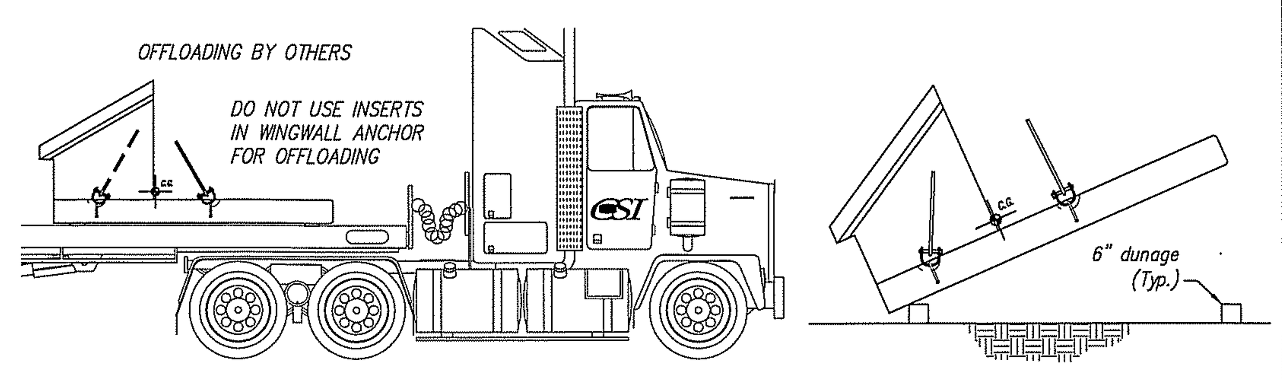


## WINGWALL OFFLOADING & TRIPPING DETAIL
Scale: N.T.S.

Contractor is to verify that all information shown on drawings has been thoroughly checked, complies with the contract documents and is adequate to meet the field conditions. Some dimensions and details may differ slightly from contract drawings to accommodate the manufacturing or design process. Approval of this drawing indicates that any deviation from the contract documents has been reviewed and found to be acceptable. Production will not commence until receipt of signed, approved shop drawings.

This drawing contains information proprietary to CONCRETE SYSTEMS, INC. This drawing is disclosed with the understanding that it will be retained in confidence and its use limited solely to the purpose for which it is disclosed. It is understood that no reproduction of this drawing is authorized without permission from CONCRETE SYSTEMS, INC. and that it will be returned to CONCRETE SYSTEMS, INC. upon request.

STATE OF VERMONT — CHRISTOPHER M. VICK — NO. 77083 Structural — LICENSED PROFESSIONAL ENGINEER — 6/11/15
Stamp for structural design only

| Rev. | Date | DESCRIPTION | By |
|---|---|---|---|
| 7 | | | |
| 6 | | | |
| 5 | | | |
| 4 | | | |
| 3 | 04JUN2015 | REVISED PER CUSTOMER REVIEW | RY |
| 2 | 28MAY2015 | EL A-A & B-B: 437.17 WAS 437.13, EXTENDED WINGWALLS EVEN WITH HEADWALL | RY |
| 1 | 14MAY2015 | REVISED PER CUSTOMER REVIEW, SEE SHEET 1 | RY |

REVISIONS

This drawing is based upon information provided from the following documents and/or sources:
Engineer: STATE OF VT/AOT PROGRAM DEVELOPMENT
Project No: ----
Drawings: STATE OF VT/AOT PROPOSED IMPROVEMENT BRIDGE PROJECT, TOWN OF RICHFORD SHEETS 1,2,4,22,23,24 OF 36
Specifications: STANDARD SPECIFICATIONS FOR CONSTRUCTION DATED 2011
----
Other Sources: ----

CSI
Concrete Systems Inc.
9 Commercial St., Hudson, NH,03051
Phone 603-889-4163
Fax 603-889-2417

STATE AGENCY
VTrans

Drawn By: R. YEAGER — Date: 31MAR2015
Reviewed By: B. KOLAWOLE — Date:
Approved By: — Date:

G.W. TATRO CONSTRUCTION, INC.
VT/AOT BRIDGE REPLACEMENT– ROAD IMPROVEMENT
RICHFORD, VT.

D — 26' SPAN X 10' RISE 3-SIDED CULVERT — REV 3
Drawing No. C22312-L01B
Quantity: 1 — Project No: BRF030229 — SHEET 2 OF 2

QUANTITY = 1
WEIGHT = 31.19 TONS

| C1 - BILL OF MATERIALS / EMBEDS | | | | |
|---|---|---|---|---|
| CSI ID# | DESCRIPTION | QTY | UM | COMMENTS |
| 3 DTJ | VAOT APPROVED SILANE SILOXANE | 1.30 | GA | |
| EM-0005A | 1" X 6 " PRESET WING INSERTS | 4 | EA | |
| EM-00033 | 3" FOAM CORE PVC | 7 | FT | |
| DTJ | DBSAE #5 Z-BAR GR 60 VTAOT LEVEL II | 86 | EA | DOWEL BAR SPLICER |
| DTJ | REBAR #4 Z-BAR GR 60 VTAOT LEVEL II | 696 | LB | |
| DTJ | REBAR #5 Z-BAR GR 60 VTAOT LEVEL II | 57 | LB | |
| DTJ | REBAR #7 Z-BAR GR 60 VTAOT LEVEL II | 2281 | LB | |
| MX-FA5000SC30 | MIX DESIGN - FLY ASH 5000 SELF CONSOLIDATING | 13.62 | CY | |
| C1 HEADWALL - BILL OF MATERIALS / EMBEDS | | | | |
| DTJ | GUARDRAIL ANCHOR | 5 | EA | SUPPLIED BY OTHERS |
| DTJ | DI #5 X 28" Z-BAR GR 60 VTAOT LEVEL II | 86 | EA | DOWEL IN |
| DTJ | REBAR #5 Z-BAR GR 60 VTAOT LEVEL II | 86 | LB | |
| MX-FA5000SC30 | MIX DESIGN - FLY ASH 5000 SELF CONSOLIDATING | 1.78 | CY | |

| C1 Culvert Rebar Schedule | | | |
|---|---|---|---|
| MK | | QTY | LENGTH |
| 401 | #4 | 16 | 10 '- 6 " |
| 402 | #4 | 8 | 27 '- 0 " |
| 403 | #4 | 104 | 6 '- 4 " |
| 501 | #5 | 2 | 27 '- 4 " |
| 701 | #7 | 32 | 18 '- 0 " |
| 702 | #7 | 20 | 27 '- 0 " |

| C1 HW Rebar Schedule | | | |
|---|---|---|---|
| MK | | QTY | LENGTH |
| 501 | #5 | 3 | 27 '- 4 " |

1 Culvert piece length is ½" shorter on shop drawing than on layout drawing. Layout dimension includes joint gap.

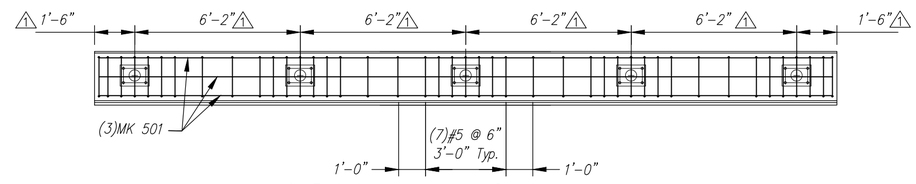


1 Typical Layout at each Guardrail Anchor
See Section A

## PLAN VIEW
## HEADWALL REINFORCING DETAIL
Scale: 1/4" = 1'-0"

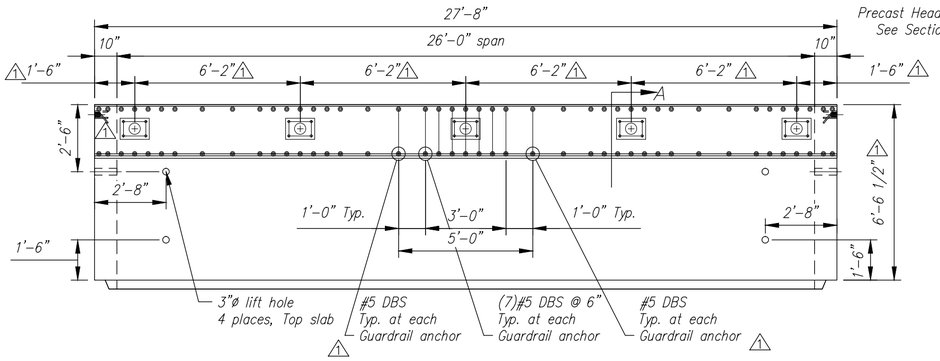


## PLAN VIEW
Scale: 1/4" = 1'-0"

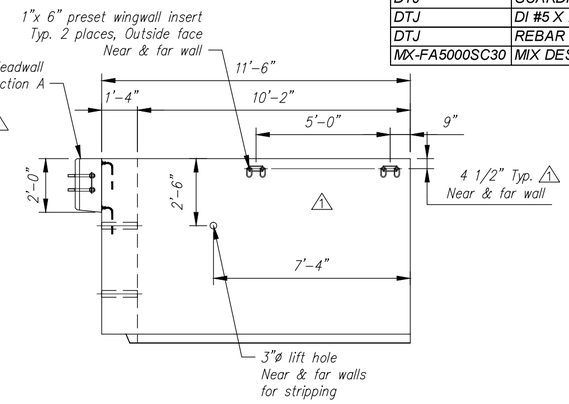


## R. SIDE ELEVATION
Scale: 1/4" = 1'-0"

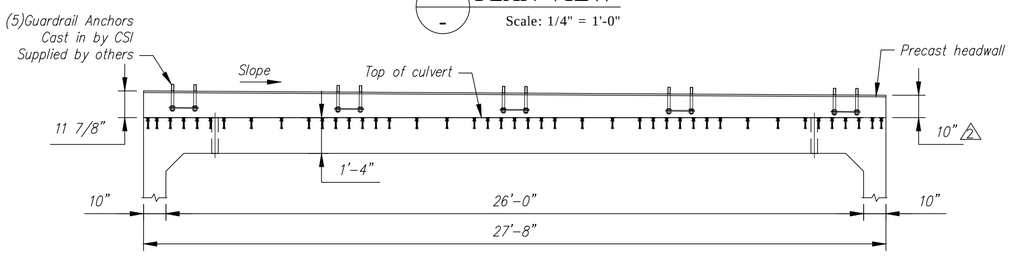


## PARTIAL ELEVATION
Scale: 1/4" = 1'-0"

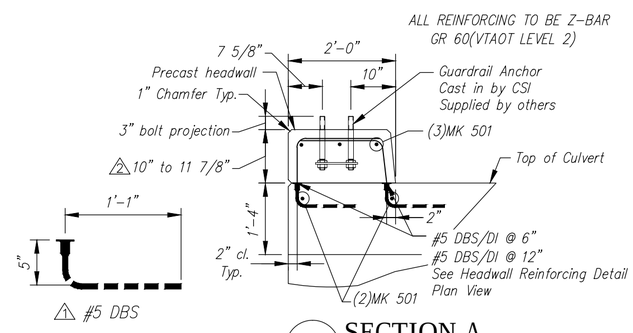


## SECTION A
Scale: N.T.S.

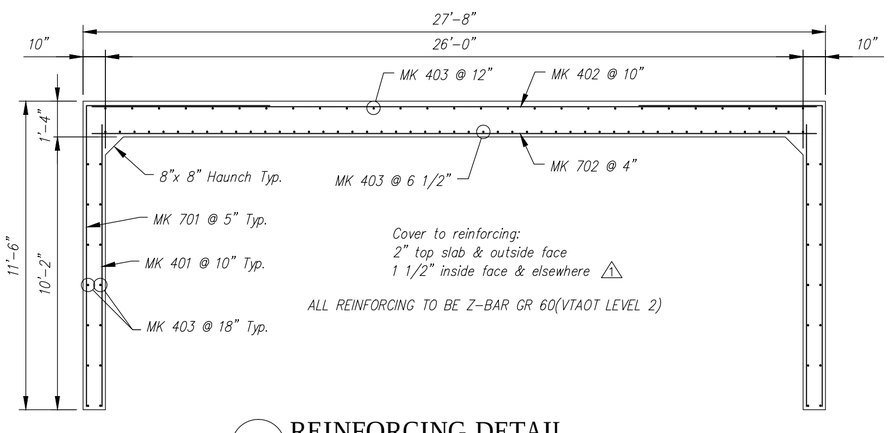


## REINFORCING DETAIL
Scale: N.T.S.

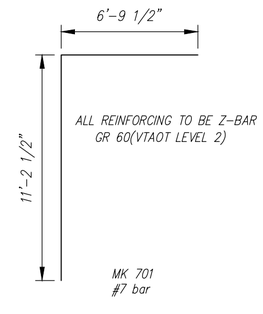


## BENDING SCHEDULE
Scale: N.T.S.

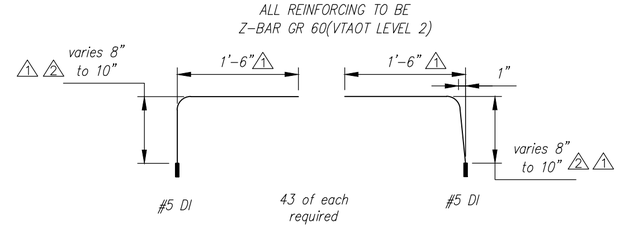


## HEADWALL
## BENDING SCHEDULE
Scale: N.T.S.

| Rev. | Date | DESCRIPTION | By |
|---|---|---|---|
| 10 | | | |
| 9 | | | |
| 8 | | | |
| 7 | | | |
| 6 | | | |
| 5 | | | |
| 4 | | | |
| 3 | 10JUN2015 | ADJUSTED WATER REPELLENT | RY |
| 2 | 28MAY2015 | 10" WAS 9 1/2", HDWALL BEND SCHED – 8" WAS 7 1/2" | RY |
| 1 | 14MAY2015 | REVISED PER CUSTOMER REVIEW, REVISED GUARDRAIL ANCHOR SPACING, MOVED WINGWALL ANCHOR, ADDED NOTE | RY |

REVISIONS

Contractor is to verify that all information shown on drawings has been thoroughly checked, complies with the contract documents and is adequate to meet the field conditions. Some dimensions and details may differ slightly from contract drawings to accommodate the manufacturing or design process. Approval of this drawing indicates that any deviation from the contract documents has been reviewed and found to be acceptable. Production will not commence until receipt of signed, approved shop drawings.

This drawing contains information proprietary to CONCRETE SYSTEMS, INC. This drawing is disclosed with the understanding that it will be retained in confidence and its use limited solely to the purpose for which it is disclosed. It is understood that no reproduction of this drawing is authorized without permission from CONCRETE SYSTEMS, INC. and that it will be returned to CONCRETE SYSTEMS, INC. upon request.

This drawing is based upon information provided from the following documents and/or sources:

Engineer: STATE OF VT/AOT PROGRAM DEVELOPMENT
Project No: ----
Drawings: STATE OF VT/AOT PROPOSED IMPROVEMENT BRIDGE PROJECT, TOWN OF RICHFORD SHEETS 1,2,4,22,23,24 OF 36
Specifications: STANDARD SPECIFICATIONS FOR CONSTRUCTION DATED 2011
Other: ----

Concrete Systems Inc.
9 Commercial St., Hudson, NH,03051
Phone 603-889-4163
Fax 603-889-2417

STATE AGENCY
VTrans Working to Get You There

| | |
|---|---|
| Drawn By R. YEAGER | Date 16APR2015 |
| Reviewed By B. KOLAWOLE | Date |
| Approved By | Date |

G.W. TATRO CONSTRUCTION, INC.
VT/AOT BRIDGE REPLACEMENT– ROAD IMPROVEMENT
RICHFORD, VT.

C — SHOP DRAWING C1 — Drawing No. C22312-C1 — REV 3

Quantity: 1 — Project No: BRF030229 — SHEET 1 OF 14

QUANTITY = 2
WEIGHT = 30.78 TONS

| C2 - BILL OF MATERIALS / EMBEDS | | | | |
|---|---|---|---|---|
| CSI ID# | DESCRIPTION | QTY | UM | COMMENTS |
| EM-00033 | 3" FOAM CORE PVC | 7 | FT | |
| JS-00002 | 1"X1"CLOSED NEOP GASKET | 49 | FT | AROUND BELL |
| DTJ | REBAR #4 Z-BAR GR 60 VTAOT LEVEL II | 824 | LB | |
| DTJ | REBAR #7 Z-BAR GR 60 VTAOT LEVEL II | 2667 | LB | |
| MX-FA5000SC30 | MIX DESIGN - FLY ASH 5000 SELF CONSOLIDATING | 15.2 | CY | |

| C2 Culvert Rebar Schedule | | | |
|---|---|---|---|
| MK | | QTY | LENGTH |
| 401 | #4 | 20 | 10 '- 6 " |
| 402 | #4 | 10 | 27 '- 0 " |
| 403 | #4 | 104 | 7 '- 3 " |
| | | | |
| 701 | #7 | 38 | 18 '- 0 " |
| 702 | #7 | 23 | 27 '- 0 " |

1 Culvert piece length is ½" shorter on shop drawing than on layout drawing. Layout dimension includes joint gap.

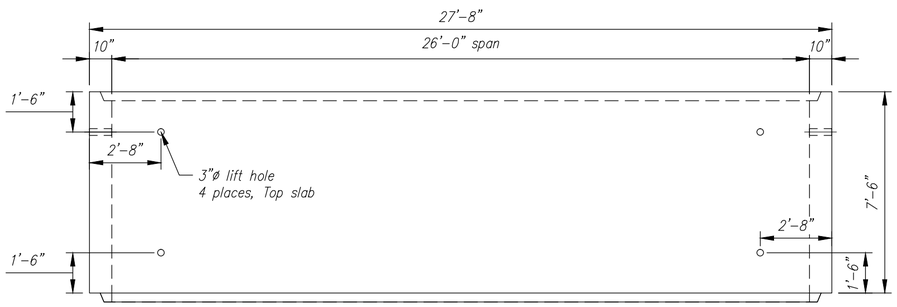


PLAN VIEW
Scale: 1/4" = 1'-0"

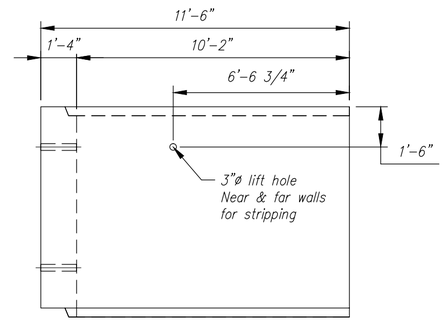


R. SIDE ELEVATION
Scale: 1/4" = 1'-0"

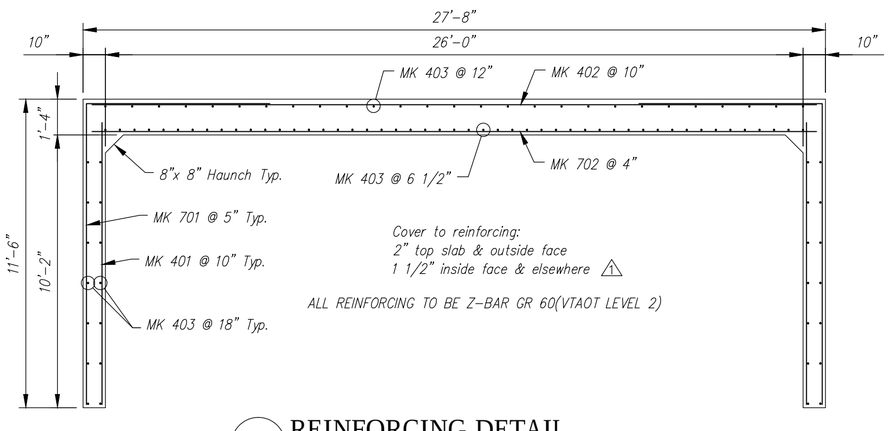


REINFORCING DETAIL
Scale: N.T.S.

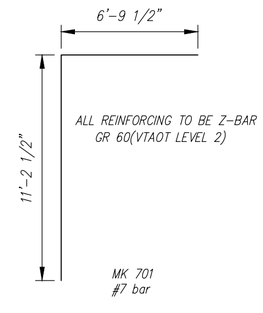


BENDING SCHEDULE
Scale: N.T.S.

| Rev. | Date | DESCRIPTION | By |
|---|---|---|---|
| 10 | | | |
| 9 | | | |
| 8 | | | |
| 7 | | | |
| 6 | | | |
| 5 | | | |
| 4 | | | |
| 3 | | | |
| 2 | | | |
| 1 | 14MAY2015 | REVISED PER CUSTOMER REVIEW, ADDED NOTE | RY |

REVISIONS

Contractor is to verify that all information shown on drawings has been thoroughly checked, complies with the contract documents and is adequate to meet the field conditions. Some dimensions and details may differ slightly from contract drawings to accommodate the manufacturing or design process. Approval of this drawing indicates that any deviation from the contract documents has been reviewed and found to be acceptable. Production will not commence until receipt of signed, approved shop drawings.

This drawing contains information proprietary to CONCRETE SYSTEMS, INC. This drawing is disclosed with the understanding that it will be retained in confidence and its use limited solely to the purpose for which it is disclosed. It is understood that no reproduction of this drawing is authorized without permission from CONCRETE SYSTEMS, INC. and that it will be returned to CONCRETE SYSTEMS, INC. upon request.

This drawing is based upon information provided from the following documents and/or sources:

Engineer: STATE OF VT/AOT PROGRAM DEVELOPMENT
Project No: ----
Drawings: STATE OF VT/AOT PROPOSED IMPROVEMENT BRIDGE PROJECT, TOWN OF RICHFORD SHEETS 1,2,4,22,23,24 OF 36
Specifications: STANDARD SPECIFICATIONS FOR CONSTRUCTION DATED 2011
Other: ----

Concrete Systems Inc.
9 Commercial St., Hudson, NH,03051
Phone 603-889-4163
Fax 603-889-2417

STATE AGENCY
VTrans Working to Get You There

| | | | |
|---|---|---|---|
| Drawn By R. YEAGER | Date 16APR2015 | G.W. TATRO CONSTRUCTION, INC. VT/AOT BRIDGE REPLACEMENT– ROAD IMPROVEMENT RICHFORD, VT. | |
| Reviewed By B. KOLAWOLE | Date | C — Drawing No. SHOP DRAWING C2 / C22312–C2 | REV 1 |
| Approved By | Date | Quantity: 2 — Project No: BRF030229 | SHEET 2 OF 14 |

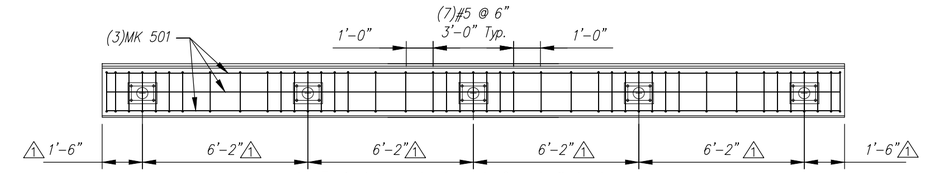


1 Typical Layout at each Guardrail Anchor
See Section A

## PLAN VIEW
## HEADWALL REINFORCING DETAIL

Scale: 1/4" = 1'-0"

| C3 - BILL OF MATERIALS / EMBEDS | | | | |
|---|---|---|---|---|
| CSI ID# | DESCRIPTION | QTY | UM | COMMENTS |
| 3 DTJ | VAOT APPROVED SILANE SILOXANE | 1.30 | GA | |
| EM-0005A | 1" X 6 " PRESET WING INSERTS | 4 | EA | |
| EM-00033 | 3" FOAM CORE PVC | 7 | FT | |
| JS-00002 | 1"X1"CLOSED NEOP GASKET | 49 | FT | AROUND BELL |
| DTJ | DBSAE #5 Z-BAR GR 60 VTAOT LEVEL II | 86 | EA | DOWEL BAR SPLICER |
| DTJ | REBAR #4 Z-BAR GR 60 VTAOT LEVEL II | 784 | LB | |
| DTJ | REBAR #5 Z-BAR GR 60 VTAOT LEVEL II | 57 | LB | |
| DTJ | REBAR #7 Z-BAR GR 60 VTAOT LEVEL II | 2539 | LB | |
| MX-FA5000SC30 | MIX DESIGN - FLY ASH 5000 SELF CONSOLIDATING | 14.72 | CY | |
| C3 HEADWALL - BILL OF MATERIALS / EMBEDS | | | | |
| DTJ | GUARDRAIL ANCHOR | 5 | EA | SUPPLIED BY OTHERS |
| DTJ | DI #5 X 28" Z-BAR GR 60 VTAOT LEVEL II | 86 | EA | DOWEL IN |
| DTJ | REBAR #5 Z-BAR GR 60 VTAOT LEVEL II | 86 | LB | |
| MX-FA5000SC30 | MIX DESIGN - FLY ASH 5000 SELF CONSOLIDATING | 1.78 | CY | |

| C3 Culvert Rebar Schedule | | | |
|---|---|---|---|
| MK | | QTY | LENGTH |
| 401 | #4 | 18 | 10 '- 6 " |
| 402 | #4 | 9 | 27 '- 0 " |
| 403 | #4 | 104 | 7 '- 1.5 " |
| | | | |
| 501 | #5 | 2 | 27 '- 4 " |
| | | | |
| 701 | #7 | 36 | 18 '- 0 " |
| 702 | #7 | 22 | 27 '- 0 " |

| C3 HW Rebar Schedule | | | |
|---|---|---|---|
| MK | | QTY | LENGTH |
| 501 | #5 | 3 | 27 '- 4 " |

QUANTITY = 1
WEIGHT = 33.41 TONS

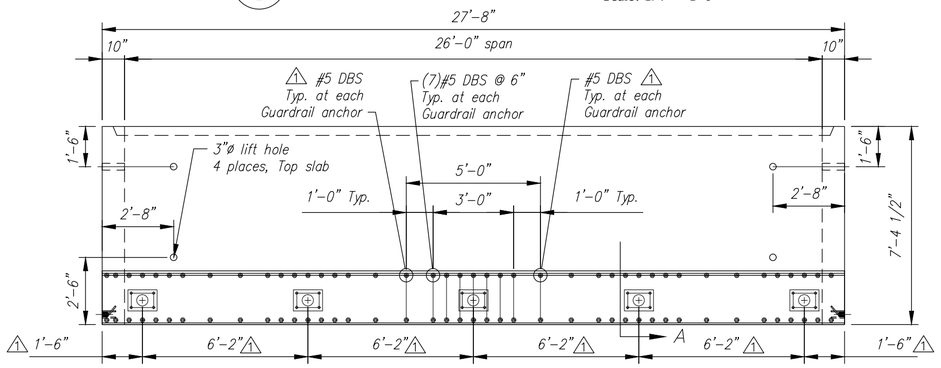


## PLAN VIEW

Scale: 1/4" = 1'-0"

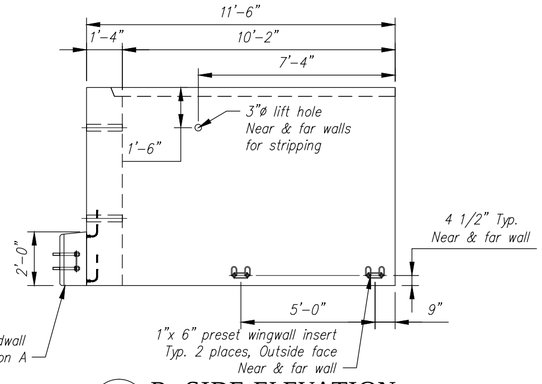


## R. SIDE ELEVATION

Scale: 1/4" = 1'-0"

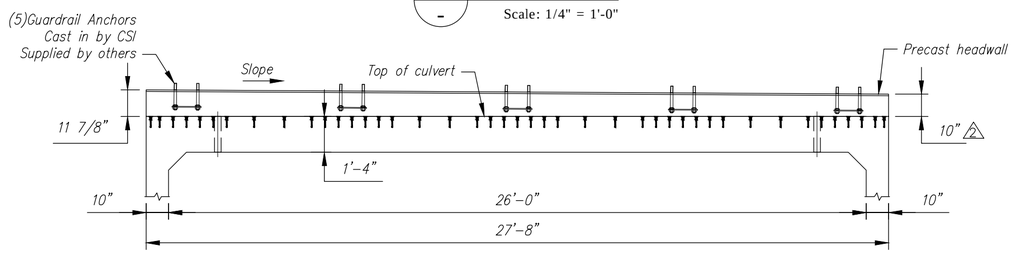


## PARTIAL ELEVATION

Scale: 1/4" = 1'-0"

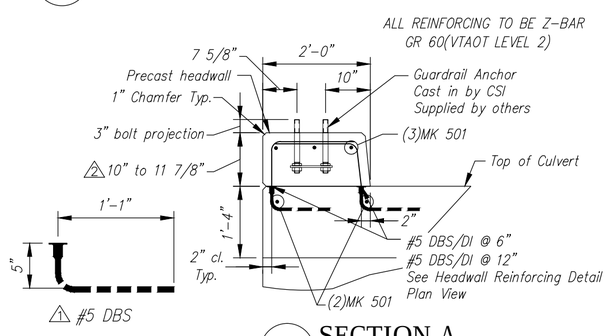


## SECTION A

Scale: N.T.S.

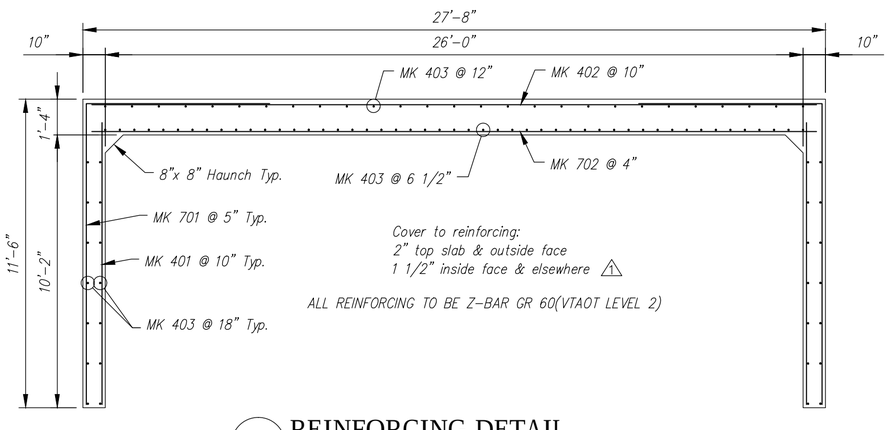


## REINFORCING DETAIL

Scale: N.T.S.

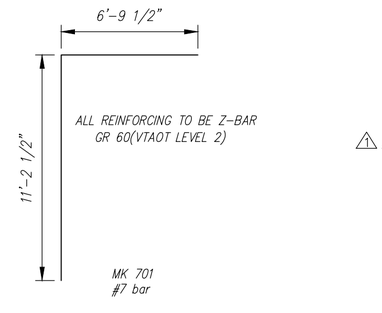


## BENDING SCHEDULE

Scale: N.T.S.

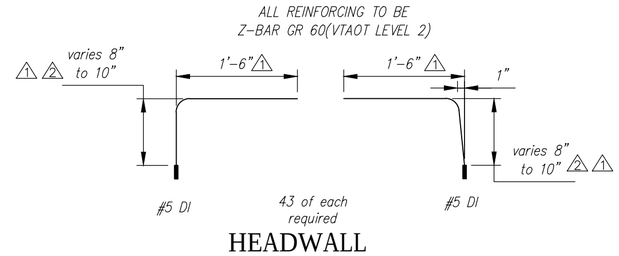


## HEADWALL BENDING SCHEDULE

Scale: N.T.S.

| Rev. | Date | DESCRIPTION | By |
|---|---|---|---|
| 10 | | | |
| 9 | | | |
| 8 | | | |
| 7 | | | |
| 6 | | | |
| 5 | | | |
| 4 | | | |
| 3 | 10JUN2015 | ADJUSTED WATER REPELLENT | RY |
| 2 | 28MAY2015 | 10" DIM WAS 9 1/2", HDWALL BEND SCHED – 8" WAS 7 1/2" | RY |
| 1 | 14MAY2015 | REVISED PER CUSTOMER REVIEW, REVISED GUARDRAIL ANCHOR SPACING, MOVED WINGWALL ANCHOR, ADDED NOTE | RY |

REVISIONS

Contractor is to verify that all information shown on drawings has been thoroughly checked, complies with the contract documents and is adequate to meet the field conditions. Some dimensions and details may differ slightly from contract drawings to accommodate the manufacturing or design process. Approval of this drawing indicates that any deviation from the contract documents has been reviewed and found to be acceptable. Production will not commence until receipt of signed, approved shop drawings.

This drawing contains information proprietary to CONCRETE SYSTEMS, INC. This drawing is disclosed with the understanding that it will be retained in confidence and its use limited solely to the purpose for which it is disclosed. It is understood that no reproduction of this drawing is authorized without permission from CONCRETE SYSTEMS, INC. and that it will be returned to CONCRETE SYSTEMS, INC. upon request.

This drawing is based upon information provided from the following documents and/or sources:

Engineer: STATE OF VT/AOT PROGRAM DEVELOPMENT
Project No: ----
Drawings: STATE OF VT/AOT PROPOSED IMPROVEMENT BRIDGE PROJECT, TOWN OF RICHFORD SHEETS 1,2,4,22,23,24 OF 36
Specifications: STANDARD SPECIFICATIONS FOR CONSTRUCTION DATED 2011
Other: ----

Concrete Systems Inc.
9 Commercial St., Hudson, NH,03051
Phone 603-889-4163
Fax 603-889-2417

STATE AGENCY
VTrans Working to Get You There

| | |
|---|---|
| Drawn By R. YEAGER | Date 16APR2015 |
| Reviewed By B. KOLAWOLE | Date |
| Approved By | Date |

G.W. TATRO CONSTRUCTION, INC.
VT/AOT BRIDGE REPLACEMENT– ROAD IMPROVEMENT
RICHFORD, VT.

C — SHOP DRAWING C3 — REV 3
Drawing No. C22312-C3
Quantity: 1 — Project No: BRF030229 — SHEET 3 OF 14

QUANTITY = 1
WEIGHT = 15.73 TONS 2

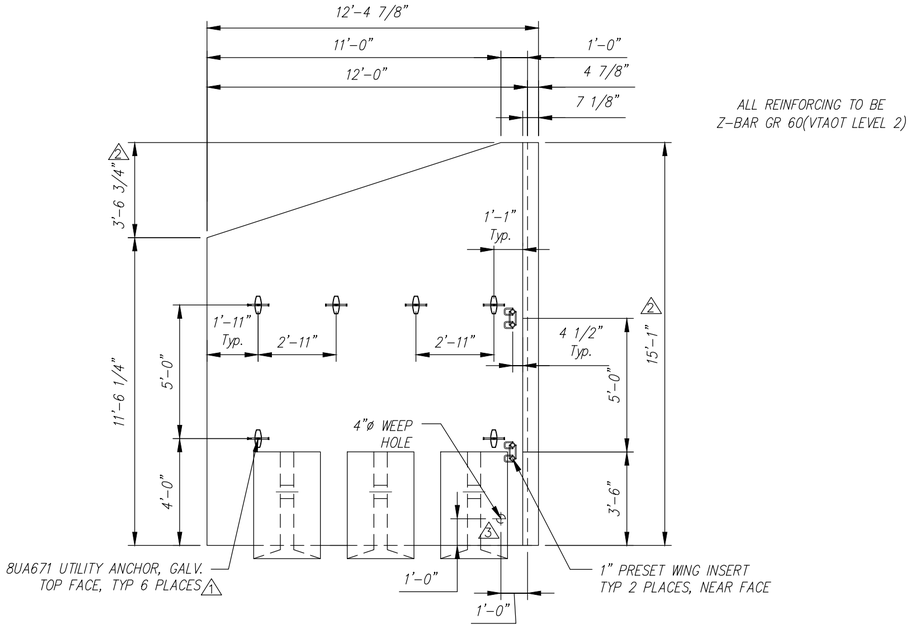


## PLAN VIEW

Scale: 1/4" = 1'-0"

ALL EXPOSED EDGES OF
CONCRETE TO RECEIVE
1 1" CHAMFER

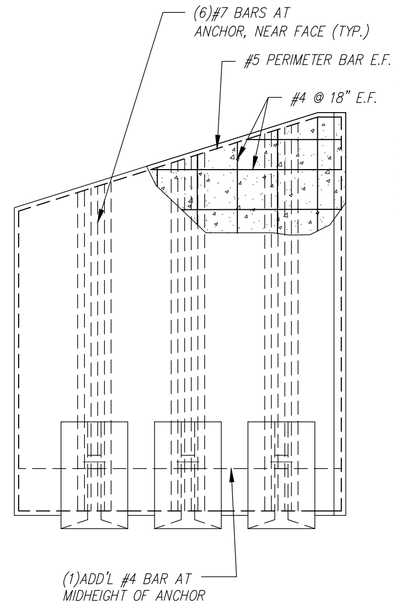


## REINFORCING DETAIL

Scale: 1/4" = 1'-0"

| WW1 - BILL OF MATERIALS / EMBEDS | | | | | |
|---|---|---|---|---|---|
| | CSI ID# | DESCRIPTION | QTY | UM | COMMENTS |
| | CSANC-E | CON/SPAN WINGWALL ANCHOR (E) | 3 | EA | |
| 3 | DTJ | VAOT APPROVED SILANE SILOXANE | 1.20 | GA | |
| | EM-00034 | 4" FOAM CORE PVC | 1 | FT | |
| | EM-0005A | 1" X 6 " PRESET WING INSERT | 2 | EA | |
| 1 | EM-00115 | UTILITY ANCHOR #8UA671-GALVANIZED | 6 | EA | |
| 2 | DTJ | REBAR #4 Z-BAR GR 60 VTAOT LEVEL II | 335 | LB | |
| 2 | DTJ | REBAR #5 Z-BAR GR 60 VTAOT LEVEL II | 106 | LB | |
| 2 | DTJ | REBAR #7 Z-BAR GR 60 VTAOT LEVEL II | 533 | LB | |
| 2 | MX-FA5000SC30 | MIX DESIGN - FLY ASH 5000 SELF CONSOLIDATING | 6.06 | CY | |

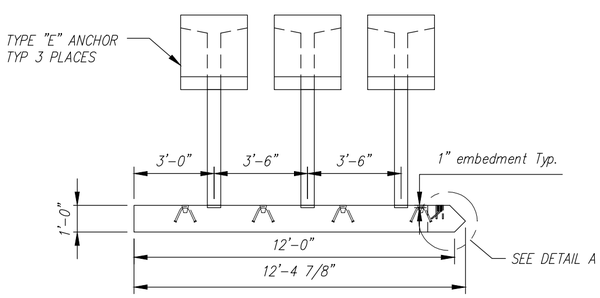


## FRONT ELEVATION

Scale: 1/4" = 1'-0"

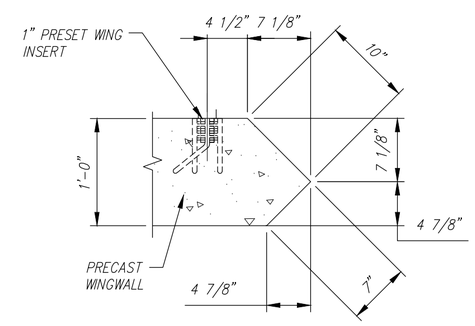


## DETAIL A

Scale: N.T.S.

| Rev. | Date | By | DESCRIPTION |
|---|---|---|---|
| 10 | | | |
| 9 | | | |
| 8 | | | |
| 7 | | | |
| 6 | | | |
| 5 | | | |
| 4 | | | |
| 3 | 10JUN2015 | RY | MOVED WEEP HOLE TO 1' |
| 2 | 28MAY2015 | RY | 15'-1 WAS 14'-8", VARIOUS CHANGES |
| 1 | 14MAY2015 | RY | REVISED PER CUSTOMER REVIEW |

REVISIONS

Contractor is to verify that all information shown on drawings has been thoroughly checked, complies with the contract documents and is adequate to meet the field conditions. Some dimensions and details may differ slightly from contract drawings to accommodate the manufacturing or design process. Approval of this drawing indicates that any deviation from the contract documents has been reviewed and found to be acceptable. Production will not commence until receipt of signed, approved shop drawings.

This drawing contains information proprietary to CONCRETE SYSTEMS, INC. This drawing is disclosed with the understanding that it will be retained in confidence and its use limited solely to the purpose for which it is disclosed. It is understood that no reproduction of this drawing is authorized without permission from CONCRETE SYSTEMS, INC. and that it will be returned to CONCRETE SYSTEMS, INC. upon request.

This drawing is based upon information provided from the following documents and/or sources:

Engineer: STATE OF VT/AOT PROGRAM DEVELOPMENT
Project No: ----
Drawings: STATE OF VT/AOT PROPOSED IMPROVEMENT BRIDGE PROJECT, TOWN OF RICHFORD SHEETS 1,2,4,22,23,24 OF 36
Specifications: STANDARD SPECIFICATIONS FOR CONSTRUCTION DATED 2011
Other: ----

Concrete Systems Inc.
9 Commercial St., Hudson, NH,03051
Phone 603-889-4163
Fax 603-889-2417

STATE AGENCY
VTrans

| | | |
|---|---|---|
| Drawn By B. SKELTON/RY | Date 04/17/2015 | |
| Reviewed By B. KOLAWOLE | Date | |
| Approved By | Date | |

G.W. TATRO CONSTRUCTION, INC.
VT/AOT BRIDGE REPLACEMENT– ROAD IMPROVEMENT
RICHFORD, VT.

C | Drawing No. SHOP DRAWING WW1 | REV 3
C22312-WW1

Quantity: 1 | Project No: BRF030229 | SHEET 4 OF 14

QUANTITY = 1
WEIGHT = 12.86 TONS 2

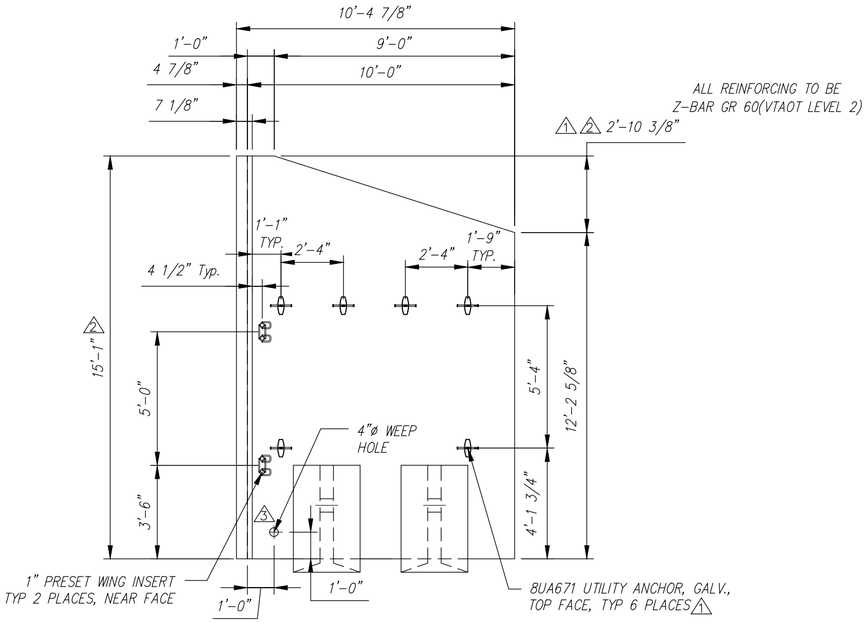


## PLAN VIEW

Scale: 1/4" = 1'-0"

ALL EXPOSED EDGES OF CONCRETE TO RECEIVE 1 1" CHAMFER

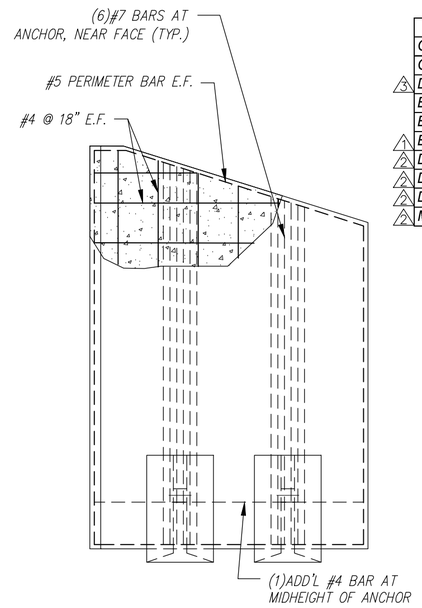


## REINFORCING DETAIL

Scale: 1/4" = 1'-0"

| | WW2 - BILL OF MATERIALS / EMBEDS | | | | |
|---|---|---|---|---|---|
| | CSI ID# | DESCRIPTION | QTY | UM | COMMENTS |
| | CSANC-E | CON/SPAN WINGWALL ANCHOR (E) | 2 | EA | |
| 3 | DTJ | VAOT APPROVED SILANE SILOXANE | 1.10 | GA | |
| | EM-00034 | 4" FOAM CORE PVC | 1 | FT | |
| | EM-0005A | 1" X 6 " PRESET WING INSERT | 2 | EA | |
| 1 | EM-00115 | UTILITY ANCHOR #8UA671-GALVANIZED | 6 | EA | |
| 2 | DTJ | REBAR #4 Z-BAR GR 60 VTAOT LEVEL II | 286 | LB | |
| 2 | DTJ | REBAR #5 Z-BAR GR 60 VTAOT LEVEL II | 99 | LB | |
| 2 | DTJ | REBAR #7 Z-BAR GR 60 VTAOT LEVEL II | 350 | LB | |
| 2 | MX-FA5000SC30 | MIX DESIGN - FLY ASH 5000 SELF CONSOLIDATING | 5.21 | CY | |

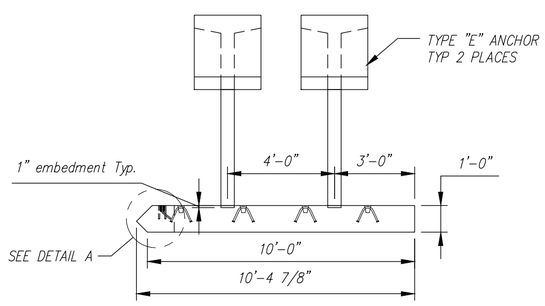


## FRONT ELEVATION

Scale: 1/4" = 1'-0"

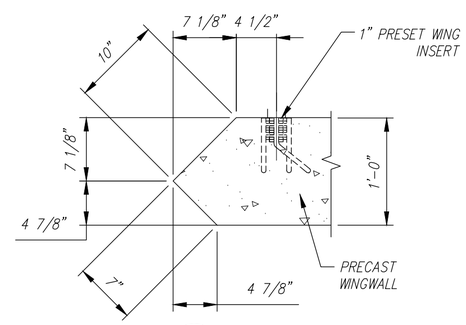


## DETAIL A

Scale: N.T.S.

| Rev. | Date | By | DESCRIPTION |
|---|---|---|---|
| 10 | | | |
| 9 | | | |
| 8 | | | |
| 7 | | | |
| 6 | | | |
| 5 | | | |
| 4 | | | |
| 3 | 10JUN2015 | RY | MOVED WEEP HOLE TO 1' |
| 2 | 28MAY2015 | RY | 15'-1" WAS 14'-8", VARIOUS CHANGES |
| 1 | 14MAY2015 | RY | REVISED PER CUSTOMER REVIEW |

REVISIONS

Contractor is to verify that all information shown on drawings has been thoroughly checked, complies with the contract documents and is adequate to meet the field conditions. Some dimensions and details may differ slightly from contract drawings to accommodate the manufacturing or design process. Approval of this drawing indicates that any deviation from the contract documents has been reviewed and found to be acceptable. Production will not commence until receipt of signed, approved shop drawings.

This drawing contains information proprietary to CONCRETE SYSTEMS, INC. This drawing is disclosed with the understanding that it will be retained in confidence and its use limited solely to the purpose for which it is disclosed. It is understood that no reproduction of this drawing is authorized without permission from CONCRETE SYSTEMS, INC. and that it will be returned to CONCRETE SYSTEMS, INC. upon request.

This drawing is based upon information provided from the following documents and/or sources:

Engineer: STATE OF VT/AOT PROGRAM DEVELOPMENT
Project No: ----
Drawings: STATE OF VT/AOT PROPOSED IMPROVEMENT BRIDGE PROJECT, TOWN OF RICHFORD SHEETS 1,2,4,22,23,24 OF 36
Specifications: STANDARD SPECIFICATIONS FOR CONSTRUCTION DATED 2011
----
Other: ----

Concrete Systems Inc.
9 Commercial St., Hudson, NH,03051
Phone 603-889-4163
Fax 603-889-2417

STATE AGENCY
VTrans Working to Get You There

| | | |
|---|---|---|
| Drawn By B. SKELTON/RY | Date 04/17/2015 | |
| Reviewed By B. KOLAWOLE | Date | |
| Approved By | Date | |

G.W. TATRO CONSTRUCTION, INC.
VT/AOT BRIDGE REPLACEMENT– ROAD IMPROVEMENT
RICHFORD, VT.

C — SHOP DRAWING WW2 — Drawing No. C22312–WW2 — REV 3

Quantity: 1 — Project No: BRF030229 — SHEET 5 OF 14

QUANTITY = 1
WEIGHT = 12.21 TONS 2

| | WW3A - BILL OF MATERIALS / EMBEDS | | | | |
|---|---|---|---|---|---|
| | CSI ID# | DESCRIPTION | QTY | UM | COMMENTS |
| | CSANC-E | CON/SPAN WINGWALL ANCHOR (E) | 2 | EA | |
| 3 | DTJ | VAOT APPROVED SILANE SILOXANE | 1.00 | GA | |
| | EM-00034 | 4" FOAM CORE PVC | 1 | FT | |
| | EM-0005A | 1" X 6 " PRESET WING INSERT | 4 | EA | |
| 1 | EM-00115 | UTILITY ANCHOR #8UA671-GALVANIZED | 6 | EA | |
| 2 | DTJ | REBAR #4 Z-BAR GR 60 VTAOT LEVEL II | 252 | LB | |
| 2 | DTJ | REBAR #5 Z-BAR GR 60 VTAOT LEVEL II | 96 | LB | |
| 2 | DTJ | REBAR #7 Z-BAR GR 60 VTAOT LEVEL II | 358 | LB | |
| 2 | MX-FA5000SC30 | MIX DESIGN - FLY ASH 5000 SELF CONSOLIDATING | 4.89 | CY | |

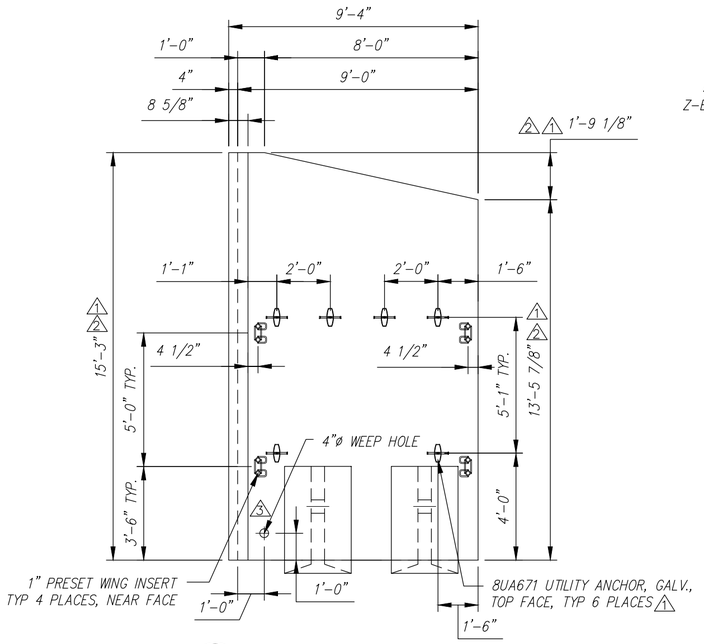


ALL REINFORCING TO BE
Z-BAR GR 60(VTAOT LEVEL 2)

## PLAN VIEW
Scale: 1/4" = 1'-0"

ALL EXPOSED EDGES OF
CONCRETE TO RECEIVE
1 1" CHAMFER

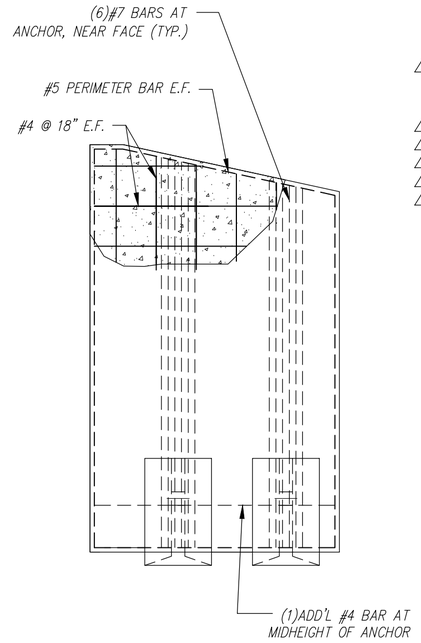


## REINFORCING DETAIL
Scale: 1/4" = 1'-0"

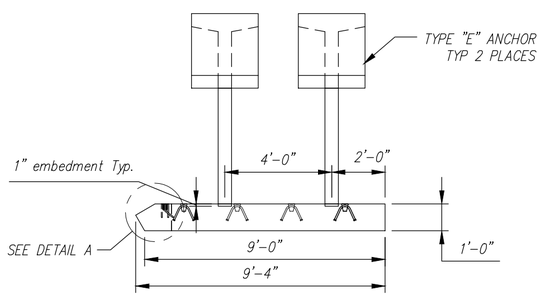


## FRONT ELEVATION
Scale: 1/4" = 1'-0"

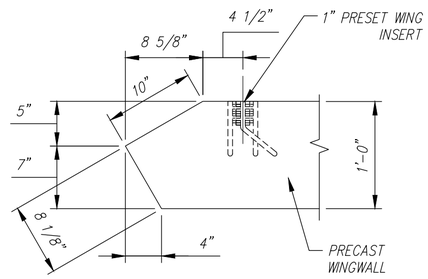


## DETAIL A
Scale: N.T.S.

| Rev. | Date | By | DESCRIPTION |
|---|---|---|---|
| 10 | | | |
| 9 | | | |
| 8 | | | |
| 7 | | | |
| 6 | | | |
| 5 | | | |
| 4 | | | |
| 3 | 10JUN2015 | RY | MOVED WEEP HOLE TO 1' |
| 2 | 28MAY2015 | RY | 15'-3" WAS 14'-10 3/8", 13'-5 7/8" WAS 13'-3 3/8", VARIOUS CHANGES |
| 1 | 14MAY2015 | RY | REVISED PER CUSTOMER REVIEW |

REVISIONS

Contractor is to verify that all information shown on drawings has been thoroughly checked, complies with the contract documents and is adequate to meet the field conditions. Some dimensions and details may differ slightly from contract drawings to accommodate the manufacturing or design process. Approval of this drawing indicates that any deviation from the contract documents has been reviewed and found to be acceptable. Production will not commence until receipt of signed, approved shop drawings.

This drawing contains information proprietary to CONCRETE SYSTEMS, INC. This drawing is disclosed with the understanding that it will be retained in confidence and its use limited solely to the purpose for which it is disclosed. It is understood that no reproduction of this drawing is authorized without permission from CONCRETE SYSTEMS, INC. and that it will be returned to CONCRETE SYSTEMS, INC. upon request.

This drawing is based upon information provided from the following documents and/or sources:

Engineer: STATE OF VT/AOT PROGRAM DEVELOPMENT
Project No: ----
Drawings: STATE OF VT/AOT PROPOSED IMPROVEMENT BRIDGE PROJECT, TOWN OF RICHFORD SHEETS 1,2,4,22,23,24 OF 36
Specifications: STANDARD SPECIFICATIONS FOR CONSTRUCTION DATED 2011
----
Other: ----

Concrete Systems Inc.
9 Commercial St., Hudson, NH,03051
Phone 603-889-4163
Fax 603-889-2417

STATE AGENCY
VTrans

| | | |
|---|---|---|
| Drawn By B. SKELTON/RY | Date 04/17/2015 | |
| Reviewed By B. KOLAWOLE | Date | |
| Approved By | Date | |

G.W. TATRO CONSTRUCTION, INC.
VT/AOT BRIDGE REPLACEMENT– ROAD IMPROVEMENT
RICHFORD, VT.

C | SHOP DRAWING WW3A | REV 3
Drawing No. C22312–WW3A
Quantity: 1 | Project No: BRF030229 | SHEET 6 OF 14

QUANTITY = 1
WEIGHT = 10.75 TONS 2

| WW3B - BILL OF MATERIALS / EMBEDS | | | | |
|---|---|---|---|---|
| CSI ID# | DESCRIPTION | QTY | UM | COMMENTS |
| CSANC-E | CON/SPAN WINGWALL ANCHOR (E) | 2 | EA | |
| 3 DTJ | VAOT APPROVED SILANE SILOXANE | 1.00 | GA | |
| EM-00034 | 4" FOAM CORE PVC | 1 | FT | |
| EM-0005A | 1" X 6 " PRESET WING INSERT | 2 | EA | |
| 2 EM-00115 | UTILITY ANCHOR #8UA671-GALVANIZED | 6 | EA | |
| DTJ | REBAR #4 Z-BAR GR 60 VTAOT LEVEL II | 208 | LB | |
| DTJ | REBAR #5 Z-BAR GR 60 VTAOT LEVEL II | 87 | LB | |
| DTJ | REBAR #7 Z-BAR GR 60 VTAOT LEVEL II | 315 | LB | |
| MX-FA5000SC30 | MIX DESIGN - FLY ASH 5000 SELF CONSOLIDATING | 4.17 | CY | |

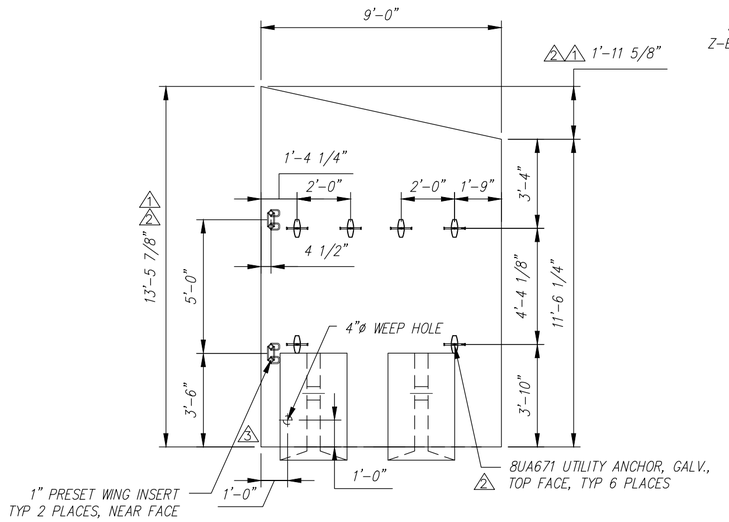


ALL REINFORCING TO BE
Z-BAR GR 60(VTAOT LEVEL 2)

## PLAN VIEW
Scale: 1/4" = 1'-0"

ALL EXPOSED EDGES OF
CONCRETE TO RECEIVE
1 1" CHAMFER

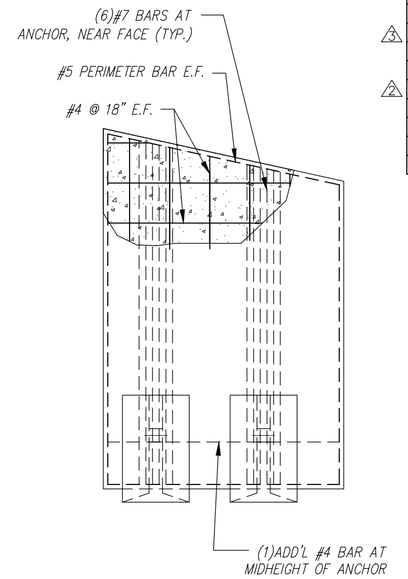


## REINFORCING DETAIL
Scale: 1/4" = 1'-0"

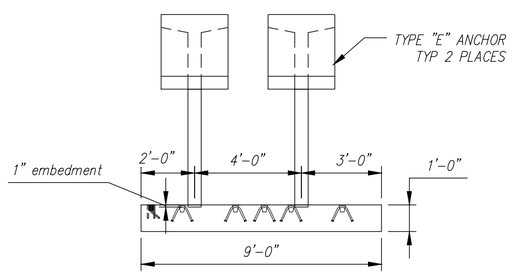


## FRONT ELEVATION
Scale: 1/4" = 1'-0"

| Rev. | Date | DESCRIPTION | By |
|---|---|---|---|
| 10 | | | |
| 9 | | | |
| 8 | | | |
| 7 | | | |
| 6 | | | |
| 5 | | | |
| 4 | | | |
| 3 | 10JUN2015 | ADDED WEEP HOLE | RY |
| 2 | 04JUN2015 | REVISED PER CUTOMER REVIEW | RY |
| 1 | 14MAY2015 | REVISED PER CUSTOMER REVIEW | RY |

REVISIONS

Contractor is to verify that all information shown on drawings has been thoroughly checked, complies with the contract documents and is adequate to meet the field conditions. Some dimensions and details may differ slightly from contract drawings to accommodate the manufacturing or design process. Approval of this drawing indicates that any deviation from the contract documents has been reviewed and found to be acceptable. Production will not commence until receipt of signed, approved shop drawings.

This drawing contains information proprietary to CONCRETE SYSTEMS, INC. This drawing is disclosed with the understanding that it will be retained in confidence and its use limited solely to the purpose for which it is disclosed. It is understood that no reproduction of this drawing is authorized without permission from CONCRETE SYSTEMS, INC. and that it will be returned to CONCRETE SYSTEMS, INC. upon request.

This drawing is based upon information provided from the following documents and/or sources:

Engineer: STATE OF VT/AOT PROGRAM DEVELOPMENT
Project No: ----
Drawings: STATE OF VT/AOT PROPOSED IMPROVEMENT BRIDGE PROJECT, TOWN OF RICHFORD SHEETS 1,2,4,22,23,24 OF 36
Specifications: STANDARD SPECIFICATIONS FOR CONSTRUCTION DATED 2011
----
Other: ----

Concrete Systems Inc.
9 Commercial St., Hudson, NH,03051
Phone 603-889-4163
Fax 603-889-2417

STATE AGENCY
VTrans Working to Get You There

| | | |
|---|---|---|
| Drawn By B. SKELTON/RY | Date 04/17/2015 | |
| Reviewed By B. KOLAWOLE | Date | |
| Approved By | Date | |

G.W. TATRO CONSTRUCTION, INC.
VT/AOT BRIDGE REPLACEMENT– ROAD IMPROVEMENT
RICHFORD, VT.

C | Drawing No. SHOP DRAWING WW3B | REV 3
C22312–WW3B

Quantity: 1 | Project No: BRF030229 | SHEET 7 OF 14

QUANTITY = 1
WEIGHT = 16.47 TONS 2 3

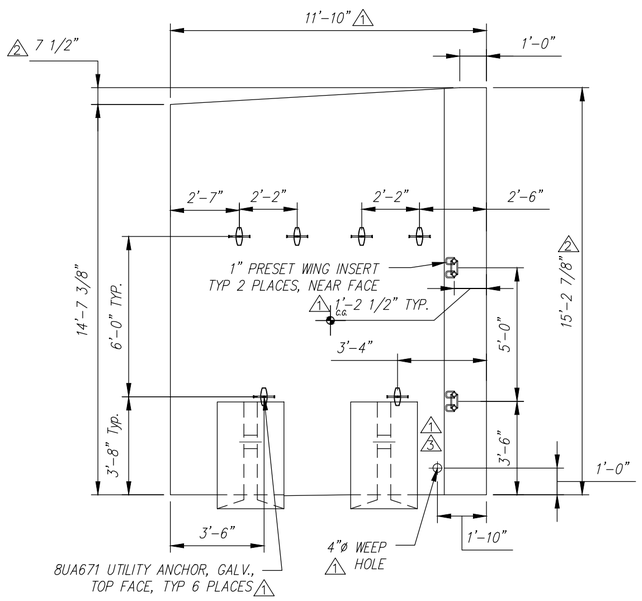


ALL REINFORCING TO BE Z-BAR GR 60(VTAOT LEVEL 2)

## PLAN VIEW
Scale: 1/4" = 1'-0"

ALL EXPOSED EDGES OF CONCRETE TO RECEIVE 1 1" CHAMFER

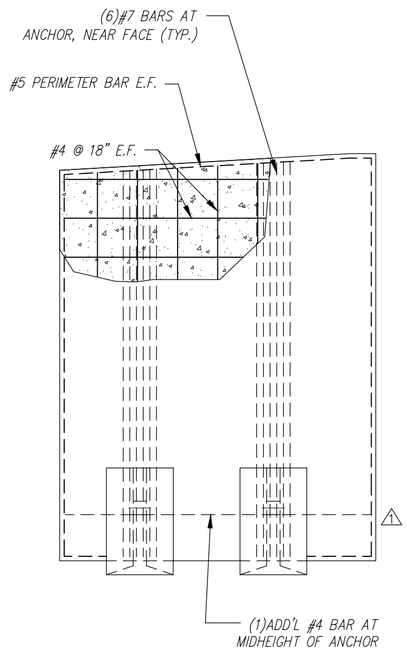


## REINFORCING DETAIL
Scale: 1/4" = 1'-0"

| | WW4 - BILL OF MATERIALS / EMBEDS | | | | |
|---|---|---|---|---|---|
| | CSI ID# | DESCRIPTION | QTY | UM | COMMENTS |
| | CSANC-E | CON/SPAN WINGWALL ANCHOR (E) | 2 | EA | |
| 3 | DTJ | VAOT APPROVED SILANE SILOXANE | 1.20 | GA | |
| | EM-00034 | 4" FOAM CORE PVC | 1 | FT | |
| | EM-0005A | 1" X 6 " PRESET WING INSERT | 2 | EA | |
| 1 | EM-00115 | UTILITY ANCHOR #8UA671-GALVANIZED | 6 | EA | |
| | DTJ | REBAR #4 Z-BAR GR 60 VTAOT LEVEL II | 305 | LB | |
| | DTJ | REBAR #5 Z-BAR GR 60 VTAOT LEVEL II | 108 | LB | |
| | DTJ | REBAR #7 Z-BAR GR 60 VTAOT LEVEL II | 356 | LB | |
| 3 1 | MX-FA5000SC30 | MIX DESIGN - FLY ASH 5000 SELF CONSOLIDATING | 6.99 | CY | |

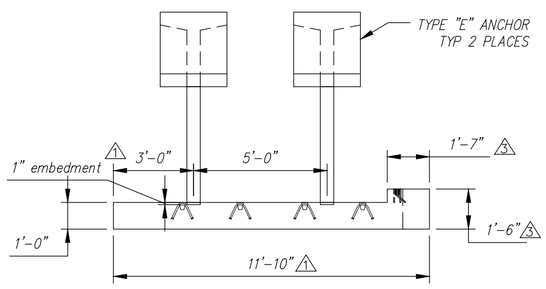


## FRONT ELEVATION
Scale: 1/4" = 1'-0"

| Rev. | Date | DESCRIPTION | By |
|---|---|---|---|
| 10 | | | |
| 9 | | | |
| 8 | | | |
| 7 | | | |
| 6 | | | |
| 5 | | | |
| 4 | | | |
| 3 | 10JUN2015 | ADDED 6" STANDOFF | RY |
| 2 | 04JUN2015 | REVISED PER CUSTOMER REVIEW | RY |
| 1 | 14MAY2015 | REVISED PER CUSTOMER REVIEW | RY |

REVISIONS

Contractor is to verify that all information shown on drawings has been thoroughly checked, complies with the contract documents and is adequate to meet the field conditions. Some dimensions and details may differ slightly from contract drawings to accommodate the manufacturing or design process. Approval of this drawing indicates that any deviation from the contract documents has been reviewed and found to be acceptable. Production will not commence until receipt of signed, approved shop drawings.

This drawing contains information proprietary to CONCRETE SYSTEMS, INC. This drawing is disclosed with the understanding that it will be retained in confidence and its use limited solely to the purpose for which it is disclosed. It is understood that no reproduction of this drawing is authorized without permission from CONCRETE SYSTEMS, INC. and that it will be returned to CONCRETE SYSTEMS, INC. upon request.

This drawing is based upon information provided from the following documents and/or sources:

Engineer: STATE OF VT/AOT PROGRAM DEVELOPMENT
Project No: ----
Drawings: STATE OF VT/AOT PROPOSED IMPROVEMENT BRIDGE PROJECT, TOWN OF RICHFORD SHEETS 1,2,4,22,23,24 OF 36
Specifications: STANDARD SPECIFICATIONS FOR CONSTRUCTION DATED 2011
----
Other: ----

Concrete Systems Inc.
9 Commercial St., Hudson, NH,03051
Phone 603-889-4163
Fax 603-889-2417

STATE AGENCY
VTrans Working to Get You There

| | |
|---|---|
| Drawn By B. SKELTON/RY | Date 04/17/2015 |
| Reviewed By B. KOLAWOLE | Date |
| Approved By | Date |

G.W. TATRO CONSTRUCTION, INC.
VT/AOT BRIDGE REPLACEMENT– ROAD IMPROVEMENT
RICHFORD, VT.

C | SHOP DRAWING WW4 | REV 3
Drawing No. C22312–WW4
Quantity: 1 | Project No: BRF030229 | SHEET 8 OF 14

QUANTITY = 1
WEIGHT = 23.02 TONS

| FOOTING SLAB - F1 - BILL OF MATERIALS / EMBEDS | | | | |
|---|---|---|---|---|
| CSI ID# | DESCRIPTION | QTY | UM | COMMENTS |
| EM-00078 | 8T SPREAD ANCHOR #FL119/P94 | 4 | EA | |
| EM-00125 | BOLT POCKET PLATE (GALVANIZED) | 2 | EA | |
| RM-00013 | REBAR #4 BLACK- GR 60 | 424 | LB | |
| RM-00015 | REBAR #5 BLACK-GR 60 40' | 264 | LB | |
| RM-00017 | REBAR #6 BLACK-GR 60 40' | 128 | LB | |
| MX-FA5000SC30 | MIX DESIGN - FLY ASH 5000 SELF CONSOLIDATING | 9.11 | CY | |
| FOOTING PEDESTAL - F1 - BILL OF MATERIALS / EMBEDS | | | | |
| RM-00013 | REBAR #4 BLACK- GR 60 | 104 | LB | |
| MX-FA5000SC30 | MIX DESIGN - FLY ASH 5000 SELF CONSOLIDATING | 2.26 | CY | |

| Ftg. Slab - F1 Rebar Schedule | | | | |
|---|---|---|---|---|
| MK | | QTY | LENGTH | |
| 401 | #4 | 26 | 12 '- 0 " | |
| 402 | #4 | 26 | 10 '- 9 " | MAX |
| 405 | #4 | 4 | 10 '- 8 " | |
| | | | | |
| 501 | #5 | 40 | 6 '- 4 " | |
| | | | | |
| 601 | #6 | 6 | 14 '- 3 " | MAX |

| Ftg. Pedestal-F1 Rebar Schedule | | | |
|---|---|---|---|
| MK | | QTY | LENGTH |
| 402 | #4 | 17 | 8 '- 3 " |
| 403 | #4 | 9 | 1 '- 8 " |

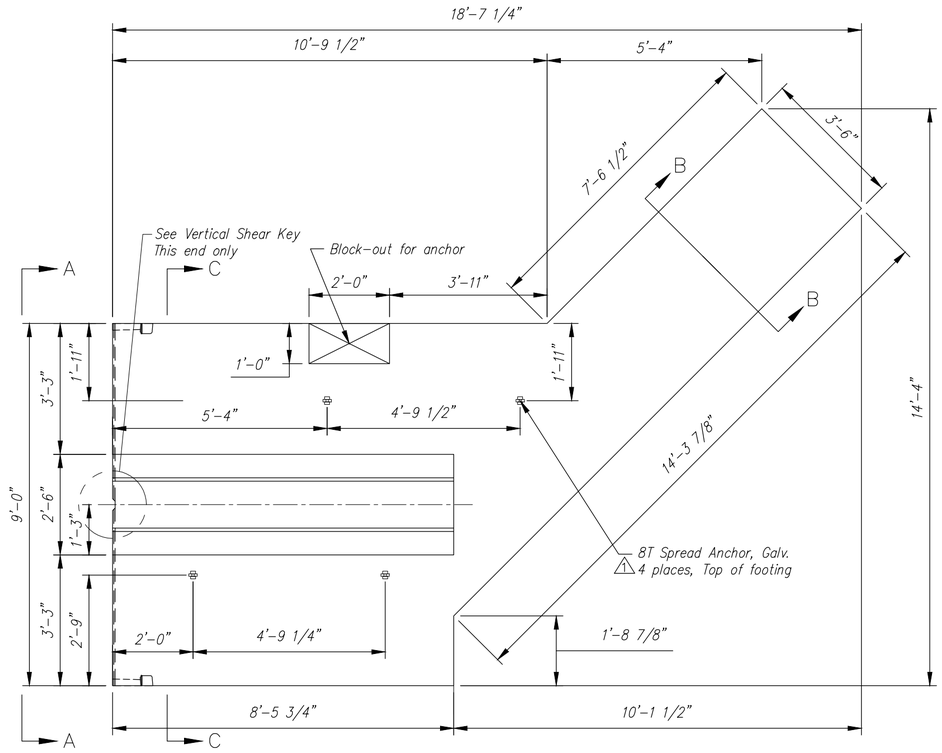


PLAN VIEW
Scale: 3/8" = 1'-0"

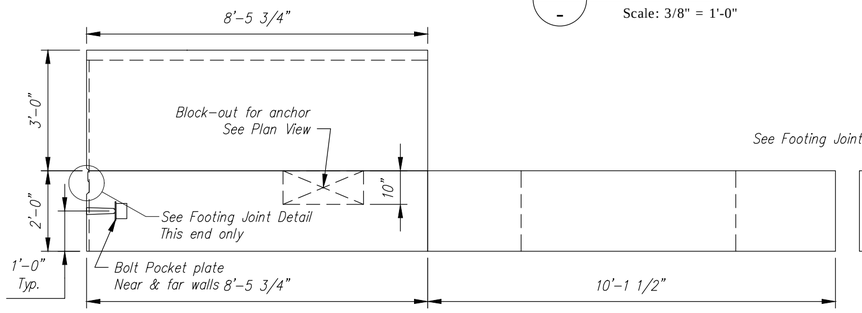


ELEVATION
Scale: 3/8" = 1'-0"

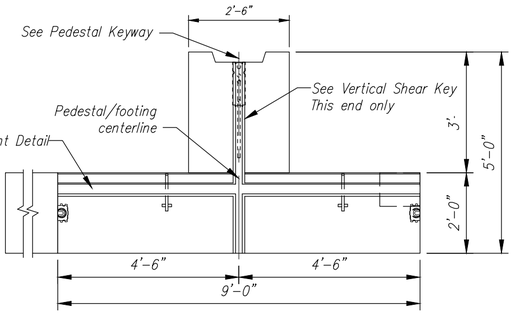


ELEVATION A-A
Scale: 3/8" = 1'-0"

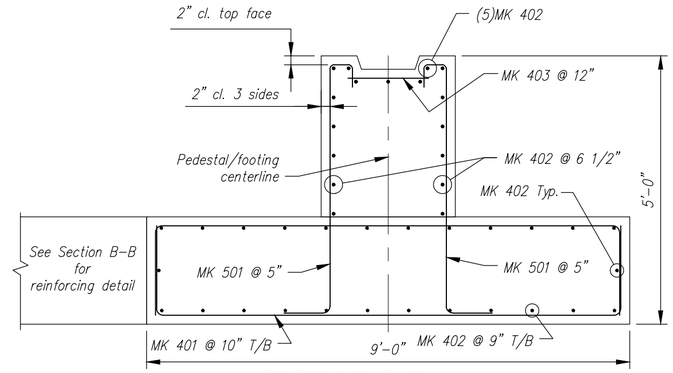


SECTION C-C
REINFORCING DETAIL
Scale: N.T.S.

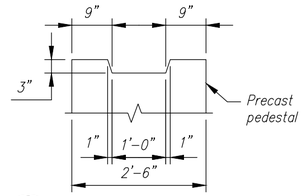


PEDESTAL KEYWAY
Scale: N.T.S.

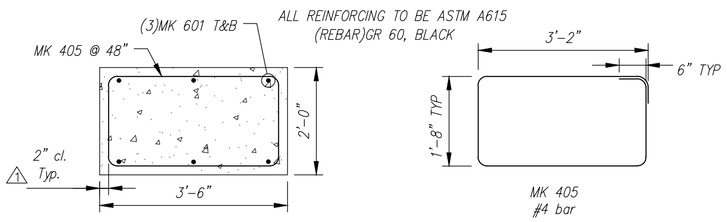


SECTION B-B
REINFORCING DETAIL
Scale: N.T.S.

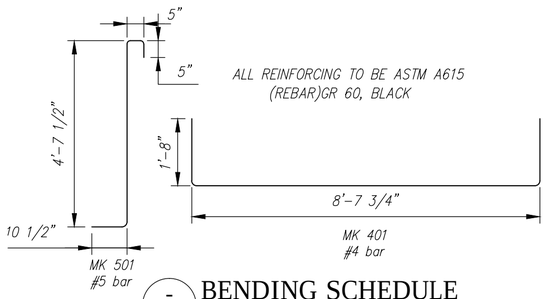


BENDING SCHEDULE
Scale: N.T.S.

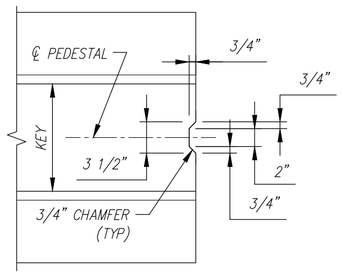


VERTICAL SHEAR KEY
Scale: N.T.S.

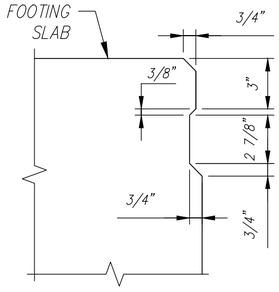


JOINT DETAIL
Scale: N.T.S.

| Rev. | Date | DESCRIPTION | By |
|---|---|---|---|
| 1 | 14MAY2015 | REVISED PER CUSTOMER REVIEW, REVISED ANCHOR LOCATIONS | RY |
| 2 | | | |
| 3 | | | |
| 4 | | | |
| 5 | | | |
| 6 | | | |
| 7 | | | |
| 8 | | | |
| 9 | | | |
| 10 | | | |

REVISIONS


Contractor is to verify that all information shown on drawings has been thoroughly checked, complies with the contract documents and is adequate to meet the field conditions. Some dimensions and details may differ slightly from contract drawings to accommodate the manufacturing or design process. Approval of this drawing indicates that any deviation from the contract documents has been reviewed and found to be acceptable. Production will not commence until receipt of signed, approved shop drawings.

This drawing contains information proprietary to CONCRETE SYSTEMS, INC. This drawing is disclosed with the understanding that it will be retained in confidence and its use limited solely to the purpose for which it is disclosed. It is understood that no reproduction of this drawing is authorized without permission from CONCRETE SYSTEMS, INC. and that it will be returned to CONCRETE SYSTEMS, INC. upon request.


This drawing is based upon information provided from the following documents and/or sources:

Engineer: STATE OF VT/AOT PROGRAM DEVELOPMENT
Project No: ----
Drawings: STATE OF VT/AOT PROPOSED IMPROVEMENT BRIDGE PROJECT, TOWN OF RICHFORD SHEETS 1,2,4,22,23,24 OF 36
Specifications: STANDARD SPECIFICATIONS FOR CONSTRUCTION DATED 2011 ----
Other: ----


Concrete Systems Inc.
9 Commercial St., Hudson, NH,03051
Phone 603-889-4163
Fax 603-889-2417


STATE AGENCY
VTrans

| | | |
|---|---|---|
| Drawn By R. YEAGER | Date 16APR2015 | |
| Reviewed By B. KOLAWOLE | Date | |
| Approved By | Date | |

G.W. TATRO CONSTRUCTION, INC.
VT/AOT BRIDGE REPLACEMENT– ROAD IMPROVEMENT
RICHFORD, VT.

C | Drawing No. SHOP DRAWING F1 | REV 1
C22312–F1

Quantity: 1 | Project No: BRF030229 | SHEET 9 OF 14

QUANTITY = 1
WEIGHT = 21.97 TONS

| Ftg. Slab - F2 Rebar Schedule | | | | |
|---|---|---|---|---|
| MK | | QTY | LENGTH | |
| 401 | #4 | 26 | 12 '- 0 " | |
| 402 | #4 | 26 | 10 '- 9 " | MAX |
| 405 | #4 | 4 | 10 '- 8 " | |
| | | | | |
| 501 | #5 | 40 | 6 '- 4 " | |
| | | | | |
| 601 | #6 | 6 | 12 '- 3 " | MAX |

| Ftg. Pedestal-F2 Rebar Schedule | | | |
|---|---|---|---|
| MK | | QTY | LENGTH |
| 402 | #4 | 17 | 8 '- 3 " |
| 403 | #4 | 9 | 1 '- 8 " |

| FOOTING SLAB - F2 - BILL OF MATERIALS / EMBEDS | | | | |
|---|---|---|---|---|
| CSI ID# | DESCRIPTION | QTY | UM | COMMENTS |
| EM-00078 | 8T SPREAD ANCHOR #FL119/P94 | 4 | EA | |
| EM-00125 | BOLT POCKET PLATE (GALVANIZED) | 2 | EA | |
| RM-00013 | REBAR #4 BLACK- GR 60 | 424 | LB | |
| RM-00015 | REBAR #5 BLACK-GR 60 40' | 264 | LB | |
| RM-00017 | REBAR #6 BLACK-GR 60 40' | 110 | LB | |
| MX-FA5000SC30 | MIX DESIGN - FLY ASH 5000 SELF CONSOLIDATING | 8.59 | CY | |
| FOOTING PEDESTAL - F2 - BILL OF MATERIALS / EMBEDS | | | | |
| RM-00013 | REBAR #4 BLACK- GR 60 | 104 | LB | |
| MX-FA5000SC30 | MIX DESIGN - FLY ASH 5000 SELF CONSOLIDATING | 2.26 | CY | |

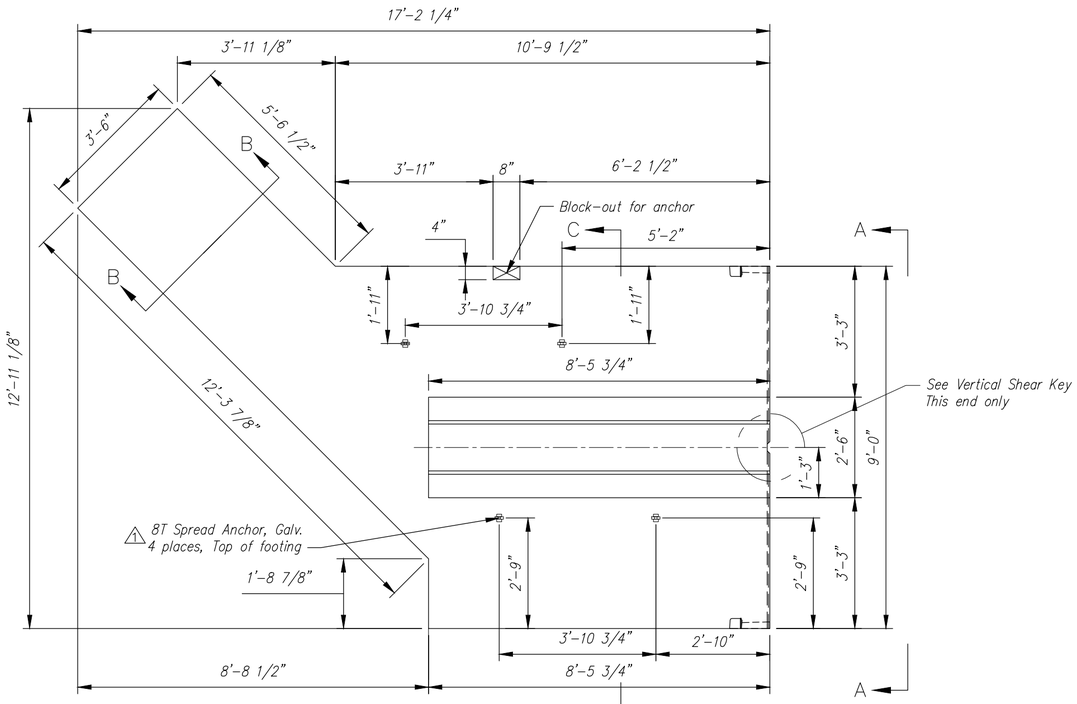


PLAN VIEW
Scale: 3/8" = 1'-0"

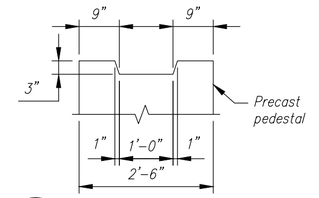


PEDESTAL KEYWAY
Scale: N.T.S.

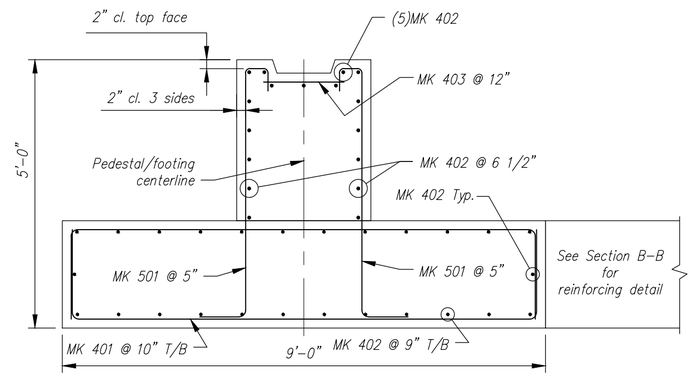


SECTION C-C
REINFORCING DETAIL
Scale: N.T.S.

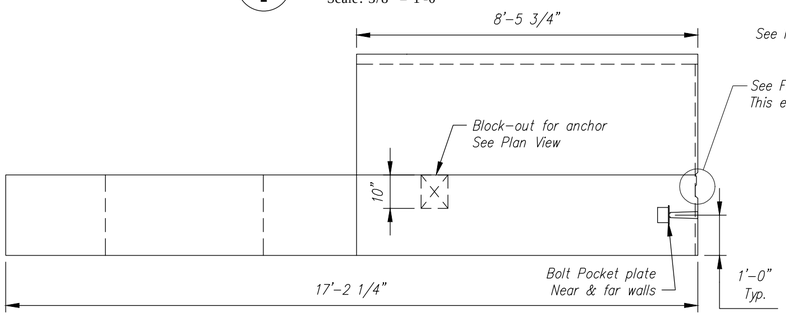


ELEVATION
Scale: 3/8" = 1'-0"

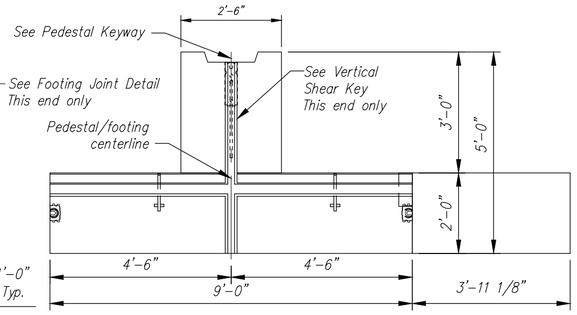


ELEVATION A-A
Scale: 3/8" = 1'-0"

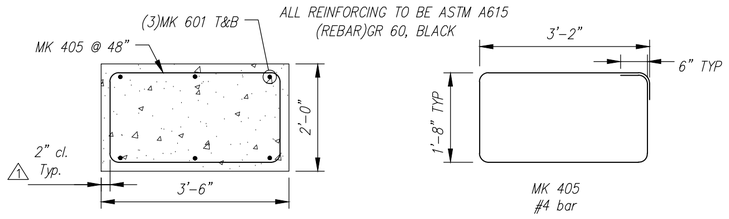


SECTION B-B
REINFORCING DETAIL
Scale: N.T.S.

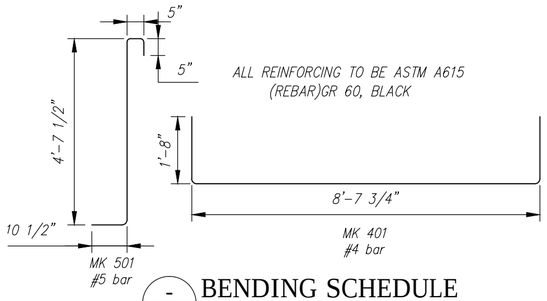


BENDING SCHEDULE
Scale: N.T.S.

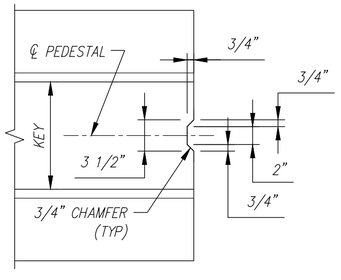


VERTICAL SHEAR KEY
Scale: N.T.S.

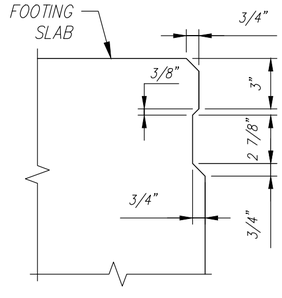


JOINT DETAIL
Scale: N.T.S.

| Rev. | Date | By | DESCRIPTION |
|---|---|---|---|
| 1 | 14MAY2015 | RY | REVISED PER CUSTOMER REVIEW, REVISED ANCHOR LOCATIONS |
| 2 | | | |
| 3 | | | |
| 4 | | | |
| 5 | | | |
| 6 | | | |
| 7 | | | |
| 8 | | | |
| 9 | | | |
| 10 | | | |

REVISIONS

Contractor is to verify that all information shown on drawings has been thoroughly checked, complies with the contract documents and is adequate to meet the field conditions. Some dimensions and details may differ slightly from contract drawings to accommodate the manufacturing or design process. Approval of this drawing indicates that any deviation from the contract documents has been reviewed and found to be acceptable. Production will not commence until receipt of signed, approved shop drawings.

This drawing contains information proprietary to CONCRETE SYSTEMS, INC. This drawing is disclosed with the understanding that it will be retained in confidence and its use limited solely to the purpose for which it is disclosed. It is understood that no reproduction of this drawing is authorized without permission from CONCRETE SYSTEMS, INC. and that it will be returned to CONCRETE SYSTEMS, INC. upon request.

This drawing is based upon information provided from the following documents and/or sources:

Engineer: STATE OF VT/AOT PROGRAM DEVELOPMENT
Project No: ----
Drawings: STATE OF VT/AOT PROPOSED IMPROVEMENT BRIDGE PROJECT, TOWN OF RICHFORD SHEETS 1,2,4,22,23,24 OF 36
Specifications: STANDARD SPECIFICATIONS FOR CONSTRUCTION DATED 2011
----
Other: ----

Concrete Systems Inc.
9 Commercial St., Hudson, NH,03051
Phone 603-889-4163
Fax 603-889-2417

STATE AGENCY
VTrans

| | | |
|---|---|---|
| Drawn By R. YEAGER | Date 16APR2015 | |
| Reviewed By B. KOLAWOLE | Date | |
| Approved By | Date | |

G.W. TATRO CONSTRUCTION, INC.
VT/AOT BRIDGE REPLACEMENT– ROAD IMPROVEMENT
RICHFORD, VT.

C | Drawing No. SHOP DRAWING F2 C22312–F2 | REV 1

Quantity: 1 | Project No: BRF030229 | SHEET 10 OF 14

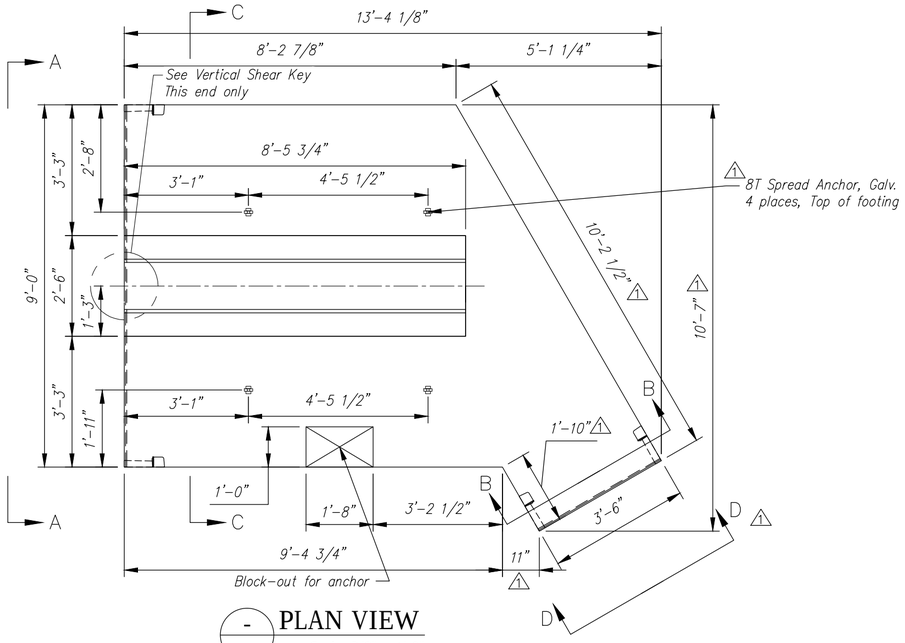


PLAN VIEW
Scale: 3/8" = 1'-0"

QUANTITY = 1
WEIGHT = 19.85 TONS

| Ftg. Slab - F3A Rebar Schedule | | | | |
|---|---|---|---|---|
| MK | | QTY | LENGTH | |
| 401 | #4 | 22 | 12 '- 0 " | |
| 402 | #4 | 26 | 9 '- 4 " | MAX |
| 405 | #4 | 2 | 10 '- 8 " | |
| | | | | |
| 501 | #5 | 40 | 6 '- 4 " | |
| | | | | |
| 601 | #6 | 6 | 9 '- 10 " | MAX |

| Ftg. Pedestal-F3A Rebar Schedule | | | |
|---|---|---|---|
| MK | | QTY | LENGTH |
| 402 | #4 | 17 | 8 '- 3 " |
| 403 | #4 | 9 | 1 '- 8 " |

| | FOOTING SLAB - F3A - BILL OF MATERIALS / EMBEDS | | | | |
|---|---|---|---|---|---|
| | CSI ID# | DESCRIPTION | QTY | UM | COMMENTS |
| 1 | EM-00078 | 8T SPREAD ANCHOR #FL119/P94 | 4 | EA | |
| 1 | EM-00125 | BOLT POCKET PLATE (GALVANIZED) | 4 | EA | |
| 1 | RM-00013 | REBAR #4 BLACK- GR 60 | 353 | LB | |
| | RM-00015 | REBAR #5 BLACK-GR 60 40' | 264 | LB | |
| 1 | RM-00017 | REBAR #6 BLACK-GR 60 40' | 89 | LB | |
| | MX-FA5000SC30 | MIX DESIGN - FLY ASH 5000 SELF CONSOLIDATING | 7.44 | CY | |
| | FOOTING PEDESTAL - F3A - BILL OF MATERIALS / EMBEDS | | | | |
| | RM-00013 | REBAR #4 BLACK- GR 60 | 104 | LB | |
| | MX-FA5000SC30 | MIX DESIGN - FLY ASH 5000 SELF CONSOLIDATING | 2.26 | CY | |

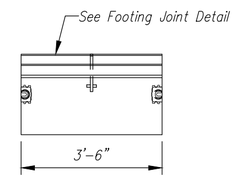


1 VIEW D-D
Scale: N.T.S.

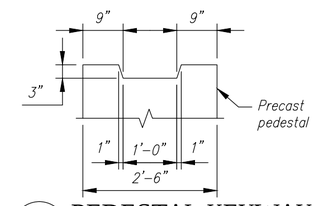


PEDESTAL KEYWAY
Scale: N.T.S.

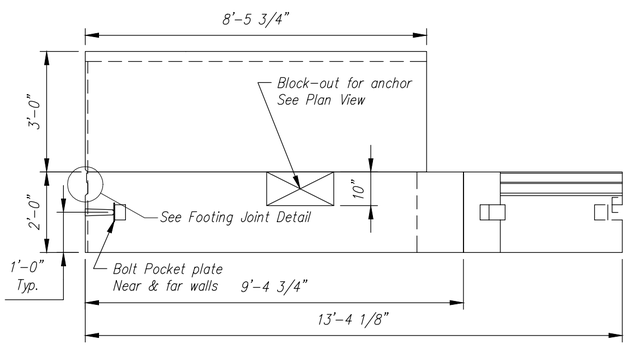


ELEVATION
Scale: 3/8" = 1'-0"

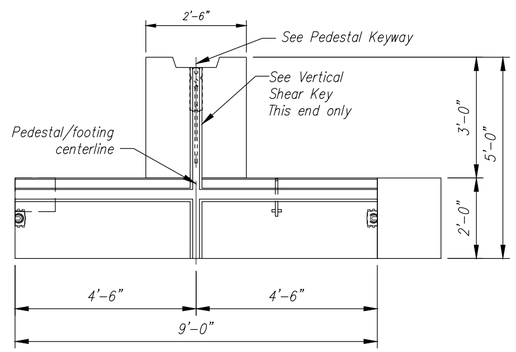


ELEVATION A-A
Scale: 3/8" = 1'-0"

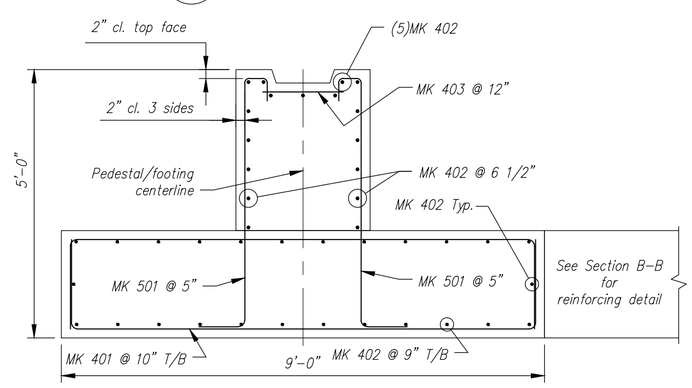


SECTION C-C
REINFORCING DETAIL
Scale: N.T.S.

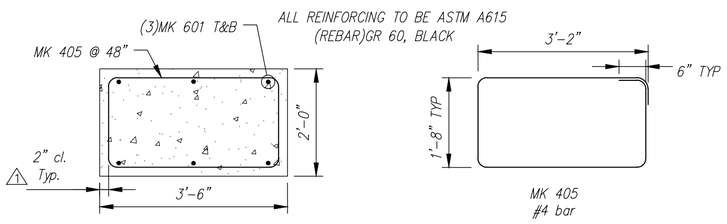


SECTION B-B
REINFORCING DETAIL
Scale: N.T.S.

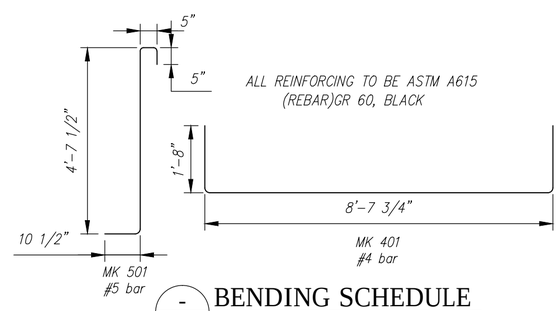


BENDING SCHEDULE
Scale: N.T.S.

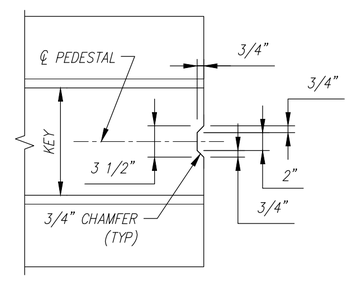


VERTICAL SHEAR KEY
Scale: N.T.S.

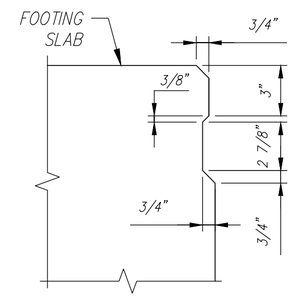


JOINT DETAIL
Scale: N.T.S.

| Rev. | Date | By | DESCRIPTION |
|---|---|---|---|
| 1 | 14MAY2015 | RY | REVISED PER CUSTOMER REVIEW, REVISED FOOTING, ADDED BOLT POCKETS,REVISED ANCHOR LOCATIONS |
| 2 | | | |
| 3 | | | |
| 4 | | | |
| 5 | | | |
| 6 | | | |
| 7 | | | |
| 8 | | | |
| 9 | | | |
| 10 | | | |

REVISIONS

Contractor is to verify that all information shown on drawings has been thoroughly checked, complies with the contract documents and is adequate to meet the field conditions. Some dimensions and details may differ slightly from contract drawings to accommodate the manufacturing or design process. Approval of this drawing indicates that any deviation from the contract documents has been reviewed and found to be acceptable. Production will not commence until receipt of signed, approved shop drawings.

This drawing contains information proprietary to CONCRETE SYSTEMS, INC. This drawing is disclosed with the understanding that it will be retained in confidence and its use limited solely to the purpose for which it is disclosed. It is understood that no reproduction of this drawing is authorized without permission from CONCRETE SYSTEMS, INC. and that it will be returned to CONCRETE SYSTEMS, INC. upon request.

This drawing is based upon information provided from the following documents and/or sources:

Engineer: STATE OF VT/AOT PROGRAM DEVELOPMENT
Project No: ----
Drawings: STATE OF VT/AOT PROPOSED IMPROVEMENT BRIDGE PROJECT, TOWN OF RICHFORD SHEETS 1,2,4,22,23,24 OF 36
Specifications: STANDARD SPECIFICATIONS FOR CONSTRUCTION DATED 2011
----
Other: ----

Concrete Systems Inc.
9 Commercial St., Hudson, NH,03051
Phone 603-889-4163
Fax 603-889-2417

STATE AGENCY
VTrans

| | | |
|---|---|---|
| Drawn By R. YEAGER | Date 16APR2015 | |
| Reviewed By B. KOLAWOLE | Date | |
| Approved By | Date | |

G.W. TATRO CONSTRUCTION, INC.
VT/AOT BRIDGE REPLACEMENT– ROAD IMPROVEMENT
RICHFORD, VT.

C | Drawing No. SHOP DRAWING F3A / C22312–F3A | REV 1

Quantity: 1 | Project No: BRF030229 | SHEET 11 OF 14

QUANTITY = 1
WEIGHT = 6.30 TONS

| FOOTING SLAB - F3B - BILL OF MATERIALS / EMBEDS | | | | |
|---|---|---|---|---|
| CSI ID# | DESCRIPTION | QTY | UM | COMMENTS |
| EM-00078 | 8T SPREAD ANCHOR #FL119/P94 | 2 | EA | |
| EM-00125 | BOLT POCKET PLATE (GALVANIZED) | 2 | EA | |
| RM-00013 | REBAR #4 BLACK- GR 60 | 29 | LB | |
| RM-00017 | REBAR #6 BLACK-GR 60 40' | 105 | LB | |
| MX-FA5000SC30 | MIX DESIGN - FLY ASH 5000 SELF CONSOLIDATING | 3.11 | CY | |

| Ftg. Slab - F3B Rebar Schedule | | | |
|---|---|---|---|
| MK | | QTY | LENGTH |
| 405 | #4 | 4 | 10 '- 8 " |
| | | | |
| 601 | #6 | 6 | 11 '- 8 " |

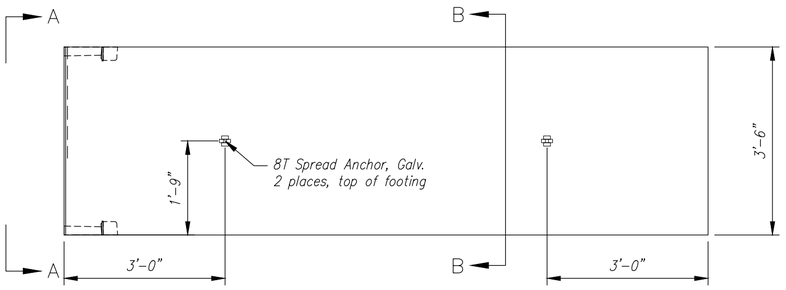


PLAN VIEW
Scale: 1/2" = 1'-0"

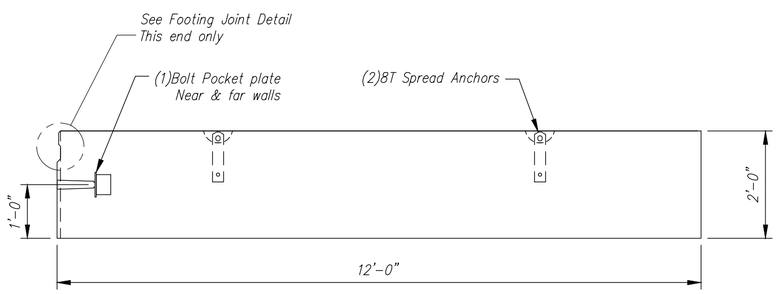


ELEVATION
Scale: 1/2" = 1'-0"

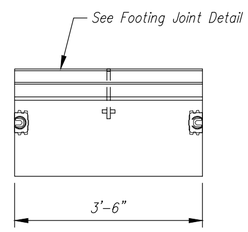


VIEW A-A
Scale: 1/2" = 1'-0"

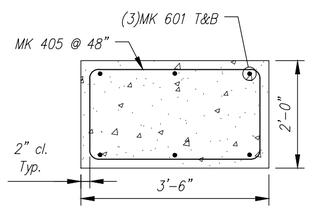


SECTION B-B
REINFORCING DETAIL
Scale: N.T.S.

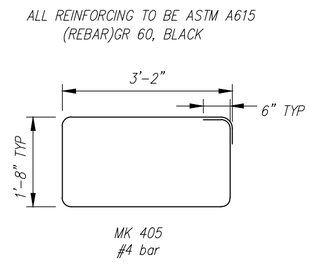


BENDING SCHEDULE
Scale: N.T.S.

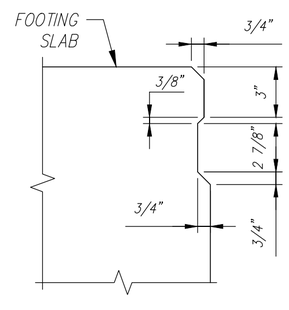


JOINT DETAIL
Scale: N.T.S.

| Rev. | Date | Description | By |
|---|---|---|---|
| 10 | | | |
| 9 | | | |
| 8 | | | |
| 7 | | | |
| 6 | | | |
| 5 | | | |
| 4 | | | |
| 3 | | | |
| 2 | | | |
| 1 | 14MAY2015 | REVISED PER CUSTOMER REVIEW, NEW FOOTING SECTION | RY |

REVISIONS

Contractor is to verify that all information shown on drawings has been thoroughly checked, complies with the contract documents and is adequate to meet the field conditions. Some dimensions and details may differ slightly from contract drawings to accommodate the manufacturing or design process. Approval of this drawing indicates that any deviation from the contract documents has been reviewed and found to be acceptable. Production will not commence until receipt of signed, approved shop drawings.

This drawing contains information proprietary to CONCRETE SYSTEMS, INC. This drawing is disclosed with the understanding that it will be retained in confidence and its use limited solely to the purpose for which it is disclosed. It is understood that no reproduction of this drawing is authorized without permission from CONCRETE SYSTEMS, INC. and that it will be returned to CONCRETE SYSTEMS, INC. upon request.

This drawing is based upon information provided from the following documents and/or sources:

Engineer: STATE OF VT/AOT PROGRAM DEVELOPMENT
Project No: ----
Drawings: STATE OF VT/AOT PROPOSED IMPROVEMENT BRIDGE PROJECT, TOWN OF RICHFORD SHEETS 1,2,4,22,23,24 OF 36
Specifications: STANDARD SPECIFICATIONS FOR CONSTRUCTION DATED 2011
----
Other: ----

CSI
Concrete Systems Inc.
9 Commercial St., Hudson, NH,03051
Phone 603-889-4163
Fax 603-889-2417

STATE AGENCY
VTrans Working to Get You There

| | |
|---|---|
| Drawn By R. YEAGER | Date 14MAY2015 |
| Reviewed By | Date |
| Approved By | Date |

G.W. TATRO CONSTRUCTION, INC.
VT/AOT BRIDGE REPLACEMENT– ROAD IMPROVEMENT
RICHFORD, VT.

C | Drawing No. SHOP DRAWING F3B C22312–F3B | REV 1

Quantity: 1 | Project No: BRF030229 | SHEET 14 OF 14

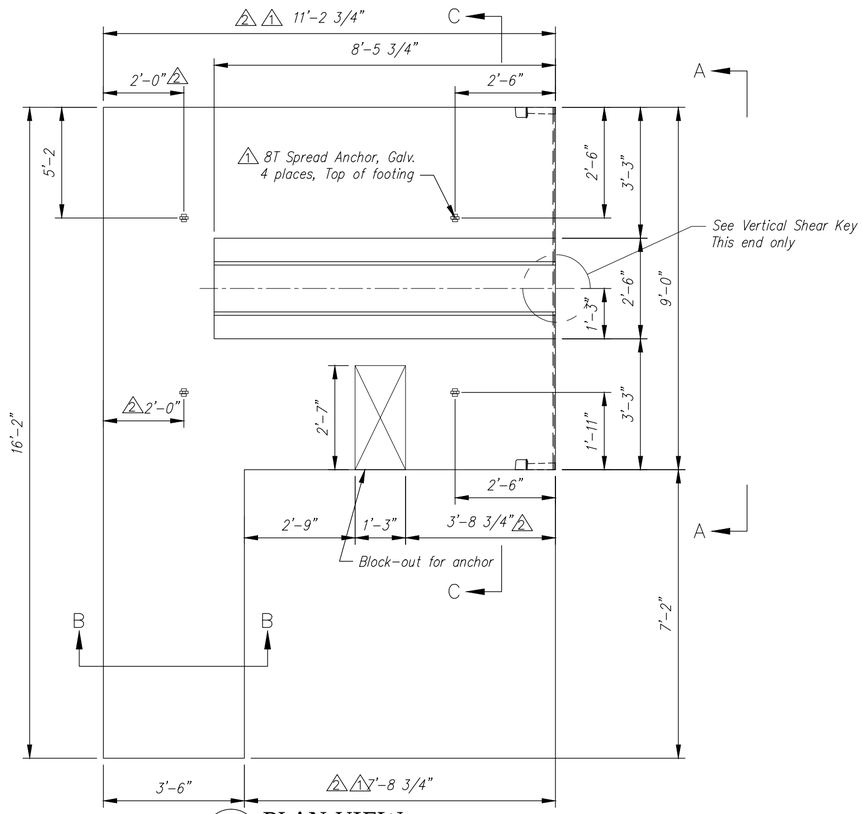


PLAN VIEW
Scale: 3/8" = 1'-0"

QUANTITY = 1
WEIGHT = 23.69 TONS 1 2

| | Ftg. Slab - F4 Rebar Schedule | | | | |
|---|---|---|---|---|---|
| | MK | | QTY | LENGTH | |
| 2 1 | 401 | #4 | 28 | 12 '- 0 " | |
| 2 1 | 402 | #4 | 26 | 11 '- 0 " | MAX |
| | 405 | #4 | 3 | 10 '- 8 " | |
| | | | | | |
| | 501 | #5 | 40 | 6 '- 4 " | |
| | | | | | |
| | 601 | #6 | 6 | 8 '- 0 " | MAX |

| Ftg. Pedestal-F4 Rebar Schedule | | | |
|---|---|---|---|
| MK | | QTY | LENGTH |
| 402 | #4 | 17 | 8 '- 3 " |
| 403 | #4 | 9 | 1 '- 8 " |

| | FOOTING SLAB - F4 - BILL OF MATERIALS / EMBEDS | | | | |
|---|---|---|---|---|---|
| | CSI ID# | DESCRIPTION | QTY | UM | COMMENTS |
| | EM-00078 | 8T SPREAD ANCHOR #FL119/P94 | 4 | EA | |
| | EM-00125 | BOLT POCKET PLATE (GALVANIZED) | 2 | EA | |
| | RM-00013 | REBAR #4 BLACK- GR 60 | 437 | LB | |
| | RM-00015 | REBAR #5 BLACK-GR 60 40' | 264 | LB | |
| | RM-00017 | REBAR #6 BLACK-GR 60 40' | 72 | LB | |
| 2 1 | MX-FA5000SC30 | MIX DESIGN - FLY ASH 5000 SELF CONSOLIDATING | 9.34 | CY | |
| | FOOTING PEDESTAL - F4 - BILL OF MATERIALS / EMBEDS | | | | |
| | RM-00013 | REBAR #4 BLACK- GR 60 | 104 | LB | |
| 1 | MX-FA5000SC30 | MIX DESIGN - FLY ASH 5000 SELF CONSOLIDATING | 2.26 | CY | |

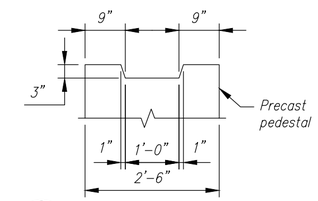


PEDESTAL KEYWAY
Scale: N.T.S.

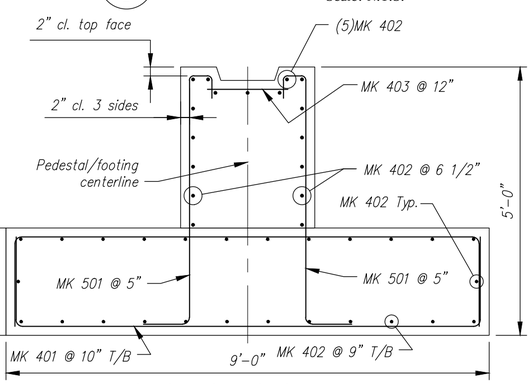


SECTION C-C
REINFORCING DETAIL
Scale: N.T.S.

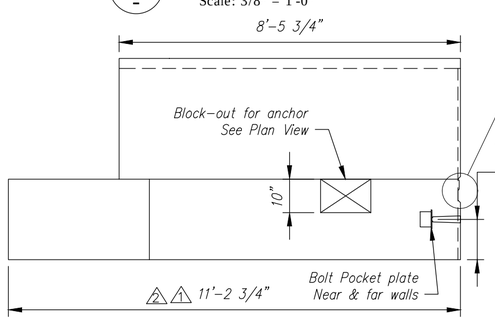


ELEVATION
Scale: 3/8" = 1'-0"

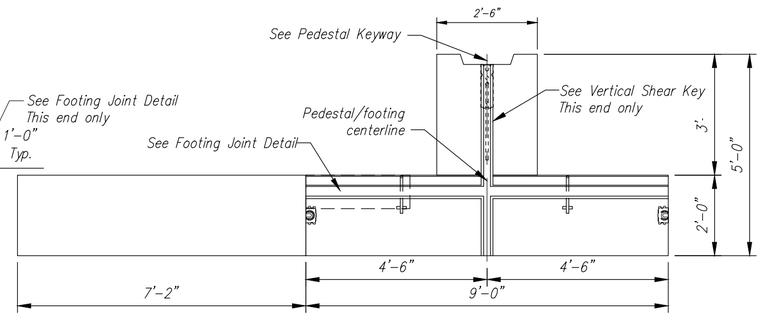


ELEVATION A-A
Scale: 3/8" = 1'-0"

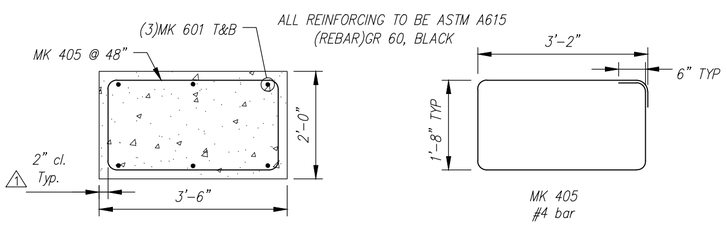


SECTION B-B
REINFORCING DETAIL
Scale: N.T.S.

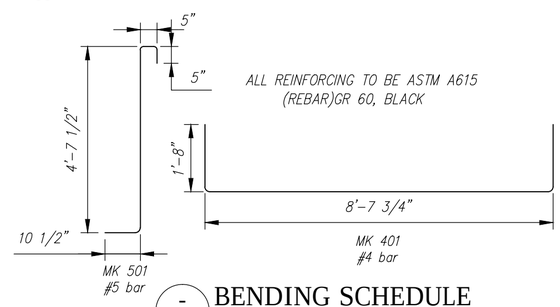


BENDING SCHEDULE
Scale: N.T.S.

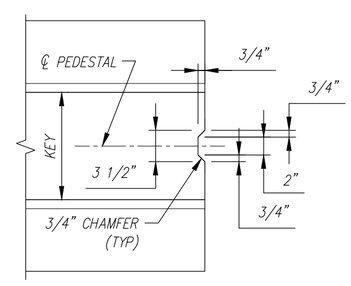


VERTICAL SHEAR KEY
Scale: N.T.S.

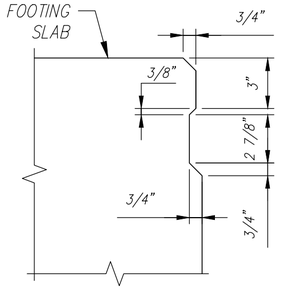


JOINT DETAIL
Scale: N.T.S.

| Rev. | Date | DESCRIPTION | By |
|---|---|---|---|
| 10 | | | |
| 9 | | | |
| 8 | | | |
| 7 | | | |
| 6 | | | |
| 5 | | | |
| 4 | | | |
| 3 | 10JUN2015 | ADDED 6" TO WIDTH, 11'-2.75 DIM WAS 10'-8.75 | RY |
| 2 | 14MAY2015 | REVISED PER CUSTOMER REVIEW, REVISED FOOTING DUE TO WINGWALL RELOCATION | RY |
| 1 | | | |

REVISIONS

Contractor is to verify that all information shown on drawings has been thoroughly checked, complies with the contract documents and is adequate to meet the field conditions. Some dimensions and details may differ slightly from contract drawings to accommodate the manufacturing or design process. Approval of this drawing indicates that any deviation from the contract documents has been reviewed and found to be acceptable. Production will not commence until receipt of signed, approved shop drawings.

This drawing contains information proprietary to CONCRETE SYSTEMS, INC. This drawing is disclosed with the understanding that it will be retained in confidence and its use limited solely to the purpose for which it is disclosed. It is understood that no reproduction of this drawing is authorized without permission from CONCRETE SYSTEMS, INC. and that it will be returned to CONCRETE SYSTEMS, INC. upon request.

This drawing is based upon information provided from the following documents and/or sources:

Engineer: STATE OF VT/AOT PROGRAM DEVELOPMENT
Project No: ----
Drawings: STATE OF VT/AOT PROPOSED IMPROVEMENT BRIDGE PROJECT, TOWN OF RICHFORD SHEETS 1,2,4,22,23,24 OF 36
Specifications: STANDARD SPECIFICATIONS FOR CONSTRUCTION DATED 2011
Other: ----

Concrete Systems Inc.
9 Commercial St., Hudson, NH,03051
Phone 603-889-4163
Fax 603-889-2417

STATE AGENCY
VTrans

| | |
|---|---|
| Drawn By R. YEAGER | Date 16APR2015 |
| Reviewed By B. KOLAWOLE | Date |
| Approved By | Date |

G.W. TATRO CONSTRUCTION, INC.
VT/AOT BRIDGE REPLACEMENT– ROAD IMPROVEMENT
RICHFORD, VT.

C | SHOP DRAWING F4 | REV 2
Drawing No. C22312–F4
Quantity: 1 | Project No: BRF030229 | SHEET 12 OF 14

QUANTITY = 1
WEIGHT = 22.66 TONS

| FOOTING SLAB - F5 - BILL OF MATERIALS / EMBEDS | | | | |
|---|---|---|---|---|
| CSI ID# | DESCRIPTION | QTY | UM | COMMENTS |
| EM-00078 | 8T SPREAD ANCHOR #FL119/P94 | 4 | EA | |
| EM-00125 | BOLT POCKET PLATE (GALVANIZED) | 4 | EA | |
| RM-00013 | REBAR #4 BLACK- GR 60 | 445 | LB | |
| RM-00015 | REBAR #5 BLACK-GR 60 40' | 383 | LB | |
| MX-FA5000SC30 | MIX DESIGN - FLY ASH 5000 SELF CONSOLIDATING | 7.86 | CY | |
| FOOTING PEDESTAL - F5 - BILL OF MATERIALS / EMBEDS | | | | |
| RM-00013 | REBAR #4 BLACK- GR 60 | 147 | LB | |
| MX-FA5000SC30 | MIX DESIGN - FLY ASH 5000 SELF CONSOLIDATING | 3.33 | CY | |

| Ftg. Slab - F5 Rebar Schedule | | | |
|---|---|---|---|
| MK | | QTY | LENGTH |
| 401 | #4 | 30 | 12 '- 0 " |
| 402 | #4 | 26 | 11 '- 9 " |
| | | | |
| 501 | #5 | 58 | 6 '- 4 " |

| Ftg. Pedestal-F5 Rebar Schedule | | | |
|---|---|---|---|
| MK | | QTY | LENGTH |
| 402 | #4 | 17 | 11 '- 9 " |
| 403 | #4 | 12 | 1 '- 8 " |

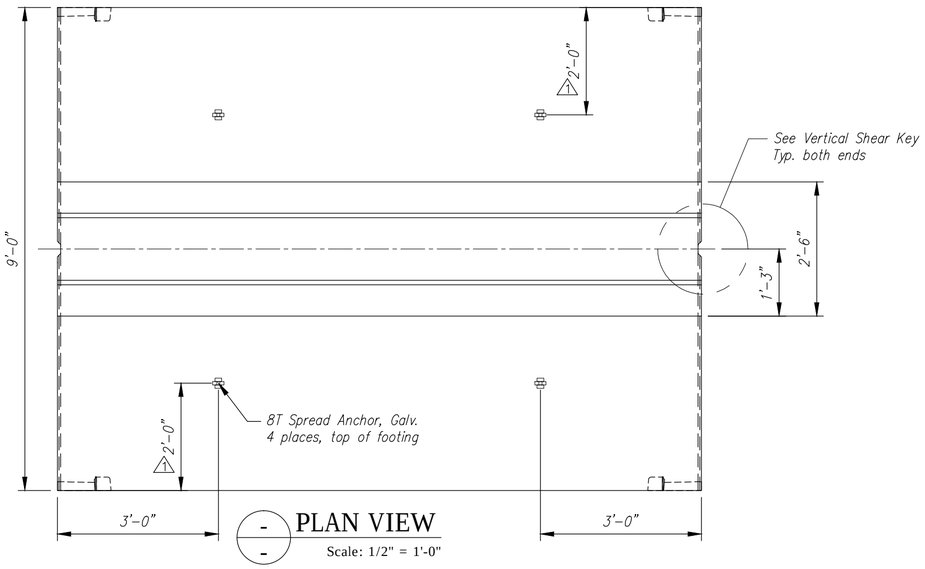


PLAN VIEW
Scale: 1/2" = 1'-0"

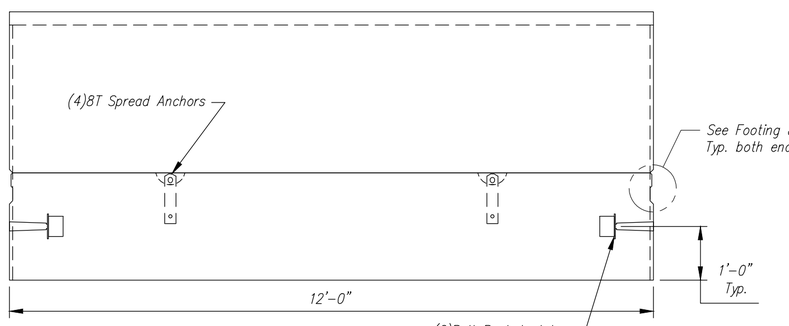


ELEVATION
Scale: 1/2" = 1'-0"

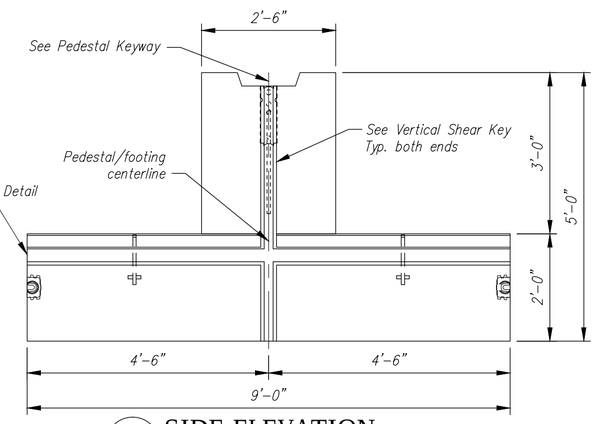


SIDE ELEVATION
Scale: 1/2" = 1'-0"

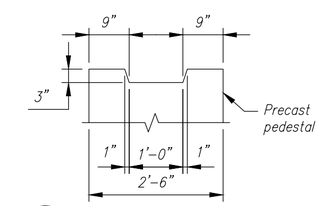


PEDESTAL KEYWAY
Scale: N.T.S.

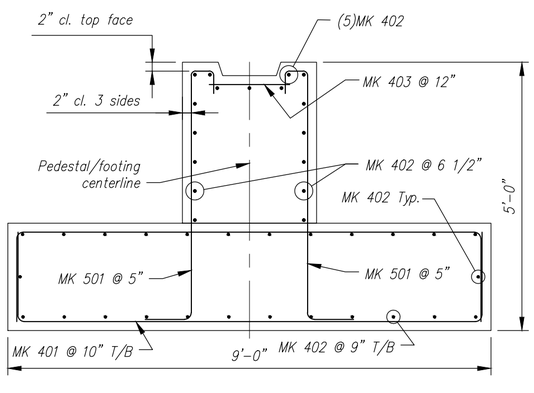


REINFORCING DETAIL
Scale: N.T.S.

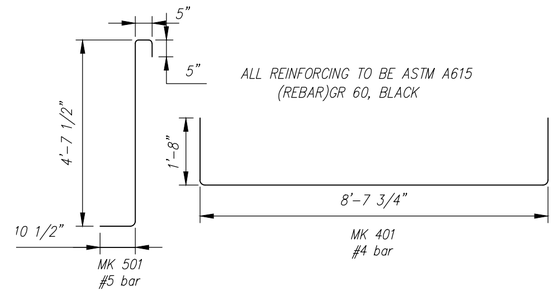


BENDING SCHEDULE
Scale: N.T.S.

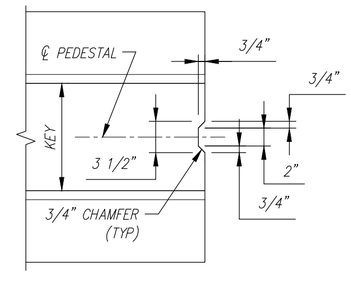


VERTICAL SHEAR KEY
Scale: N.T.S.

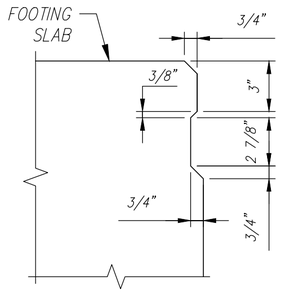


JOINT DETAIL
Scale: N.T.S.

| Rev. | Date | Description | By |
|---|---|---|---|
| 1 | 14MAY2015 | REVISED PER CUSTOMER REVIEW, REVISED ANCHOR LOCATIONS | RY |
| 2 | | | |
| 3 | | | |
| 4 | | | |
| 5 | | | |
| 6 | | | |
| 7 | | | |
| 8 | | | |
| 9 | | | |
| 10 | | | |

REVISIONS

Contractor is to verify that all information shown on drawings has been thoroughly checked, complies with the contract documents, is adequate to meet the field conditions. Some dimensions and details may differ slightly from contract drawings to accommodate the manufacturing or design process. Approval of this drawing indicates that any deviation from the contract documents has been reviewed and found to be acceptable. Production will not commence until receipt of signed, approved shop drawings.

This drawing contains information proprietary to CONCRETE SYSTEMS, INC. This drawing is disclosed with the understanding that it will be retained in confidence and its use limited solely to the purpose for which it is disclosed. It is understood that no reproduction of this drawing is authorized without permission from CONCRETE SYSTEMS, INC. and that it will be returned to CONCRETE SYSTEMS, INC. upon request.

This drawing is based upon information provided from the following documents and/or sources:

Engineer: STATE OF VT/AOT PROGRAM DEVELOPMENT
Project No: ----
Drawings: STATE OF VT/AOT PROPOSED IMPROVEMENT BRIDGE PROJECT, TOWN OF RICHFORD SHEETS 1,2,4,22,23,24 OF 36
Specifications: STANDARD SPECIFICATIONS FOR CONSTRUCTION DATED 2011
----
Other: ----

Concrete Systems Inc.
9 Commercial St., Hudson, NH,03051
Phone 603-889-4163
Fax 603-889-2417

STATE AGENCY
VTrans

| | | |
|---|---|---|
| Drawn By R. YEAGER | Date 16APR2015 | |
| Reviewed By B. KOLAWOLE | Date | |
| Approved By | Date | |

G.W. TATRO CONSTRUCTION, INC.
VT/AOT BRIDGE REPLACEMENT– ROAD IMPROVEMENT
RICHFORD, VT.

C | Drawing No. SHOP DRAWING F5 / C22312–F5 | REV 1

Quantity: 2 | Project No: BRF030229 | SHEET 13 OF 14