Transmittal of Drawings

DATE: May 20, 2015

CSI Job #	**C22312**	**Submittal No:** **Revision No:**	C22312 - Submittal-002217 - BC/CS-BOX CULVERT W/CS WW
Attn:	Mr. Jay Lafontaine (jlafontaine@gwtatro.com) Phone: (802) 644-8875; Fax: (802) 644-5020 Mr. Cody Marsh (cmarsh@gwtatro.com) Phone: (802) 644-8875; Fax: (802) 644-5020	**Owner:**	
Customer Name:	G W Tatro Construction Inc Jct Rtes 15 & 108, Jeffersonville, VT 05464	**Engineer:**	
Project:	VT/DOT Bridge Replacement - Roadway Improvements TH 3 FAS 0302 in RICHFORD, VT	**Project No /** **Contract No(s):** **Federal Aid No(s):**	BRF030229 /

Reason for submittal: For your files and distribution	
Enclosed herein please find submittal for:	**1 copy of shop drawings;1 copy of specification sheets;1 copy of structural calculations;1 copy of Layout drawing**
LO1A-B, C1-F5	
After your review:	***For approval return 1 copy for our files***

Standard Submittal Remarks: **The following is included: 1 copy of LO1A-B (Rev 1) LAYOUT, C1-F3B (Rev 1) SHOP, Calculations LO1, CSI Letter**

Revision Remarks: **5/20/15 R1- Revised, moved WW4. added F3A,F3B, rev GA**

Respectfully submitted,
Concrete Systems, Inc.

Stivale Saavedra
(ssaavedra@csigroup.com), Extn: 471
Engineering Assistant

9 Commercial Street, Hudson, New Hampshire 03051 Phone (603) 889-4163
Fax Number: Precast Sales (603) 889-0039
Fax Number: Shipping, Manhole Design and Engineering (603) 889-2417
CSI Group Web Site: www.csigroup.com

Drafter: Ray Yeager, AutoCAD Technician (ryeager@csigroup.com), 800-342-3374, Ext 472 - Prepared by: SSaavedr

May 20, 2015

Mr. Jay Lafontaine
GW Tatro Construction
5195 VT Route 15
Jeffersonville, VT

Dear Mr. Lafontaine,

Please submit this letter to supplement the revised drawings and calculations.

Please note:

1. A note on the review requested watertight joints at the wingwall culvert connection. We wonder why. This connection on past jobs has never been watertight and in fact, with filter fabric backing, is helpful in assisting the weephole and perforated drain in preventing water buildup behind the wall.
2. It is duly noted that the anchor connections have no cover as drawn in the submittal. The calculations and drawings have been revised to fix this problem while maintaining the 1" embedment which is a manufacturing detail.
3. Please not the calculations for distribution steel (#4 @ 6 ½") is found at the top of Page 8 in Section 2. The minimum reinforcing (#4 @ 10") is found in the middle of Page 8 in Section 2. The temperature and shrinkage steel (#4 @ 12") is found at the top of Page 6 in section 2.

Please contact me with questions or concerns.

Sincerely,

Christopher Vick, P.E.
Director of Engineering
Concrete Systems, Inc.
cvick@csigroup.com

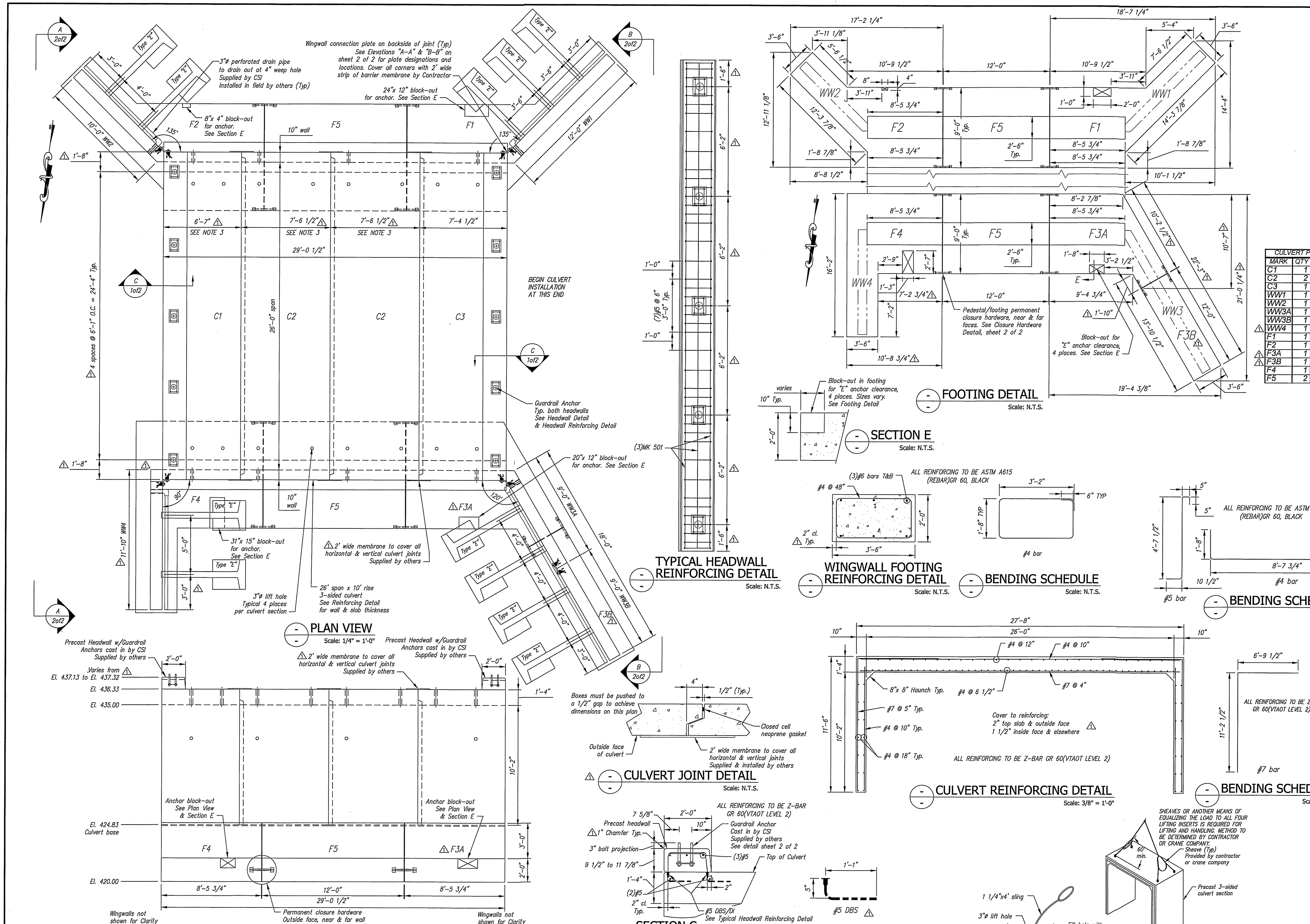

PLAN VIEW — Scale: 1/4" = 1'-0"

ELEVATION — Scale: 1/4" = 1'-0"

TYPICAL HEADWALL REINFORCING DETAIL — Scale: N.T.S.

FOOTING DETAIL — Scale: N.T.S.

SECTION E — Scale: N.T.S.

WINGWALL FOOTING REINFORCING DETAIL — Scale: N.T.S.

BENDING SCHEDULE — Scale: N.T.S.

CULVERT JOINT DETAIL — Scale: N.T.S.

SECTION C TYPICAL HEADWALL DETAIL — Scale: N.T.S.

CULVERT REINFORCING DETAIL — Scale: 3/8" = 1'-0"

CULVERT SECTION LIFTING DETAIL — Scale: N.T.S.

GENERAL NOTES:

1. Reference Standards:
   AASHTO "LRFD Bridge Design Specifications"
   ASTM C1577
2. Design Parameters:
   Live load: HL-93
   Earth Cover: 0.5' to 1.0'
   Concrete: Design strength f'c = 5000 psi; Unit weight = 150 pcf
   Reinforcing: Pedestal/Footing – ASTM A615 (rebar) GR 60, plain(VTAOT Level I) △1; Culvert/Headwall/Wingwall – Z-Bar(rebar), GR 60(VTAOT Level II)
   Soil: Unit weight = 140 pcf; Minimum lateral pressure coefficient .25; Maximum lateral pressure coefficient .50
   Cover to reinforcing: 2" Top of top slab & outside faces of walls; 1 1/2" elsewhere u.n.o.
3. Dimensions include a joint gap. Actual culvert piece length is ½" shorter (i.e. C2 = 7'-6").
4. DBS are Dowel Bar Splicers and DI are Dowel Ins. Both are supplied by CSI. DI's are to be installed and cut/bent in the field by others as required.
5. Headwall design taken from contract drawing S-360A.
6. Water repellant by CSI on all exposed faces of culvert to 1' in, headwalls and wingwalls. Water repellant to be Silane-Siloxane. △1
7. Provide engineer a minimum fourteen (14) days notice prior to the start of fabrication and a detailed casting schedule.

CULVERT PIECE SCHEDULE (MX-FA5000SC30)

MARK	QTY	LENGTH	YDS	WEIGHT	
C1	1	6.54 '	15.40	31.19	TONS
C2	2	7.50 '	15.20	30.78	TONS
C3	1	7.38 '	16.50	33.41	TONS
WW1	1	12.00 '	7.73	15.65	TONS
WW2	1	10.00 '	6.39	12.94	TONS
WW3A	1	9.00 '	6.04	12.23	TONS
WW3B	1	9.00 '	5.27	10.67	TONS
△1 WW4	1	11.83 '	7.61	15.41	TONS
F1	1	18.58 '	11.37	23.02	TONS
F2	1	17.17 '	10.85	21.97	TONS
△1 F3A	1	13.33 '	9.80	19.85	TONS
△1 F3B	1	12.00 '	3.11	6.30	TONS
F4	1	16.17 '	11.27	22.82	TONS
F5	2	12.00 '	11.19	22.66	TONS

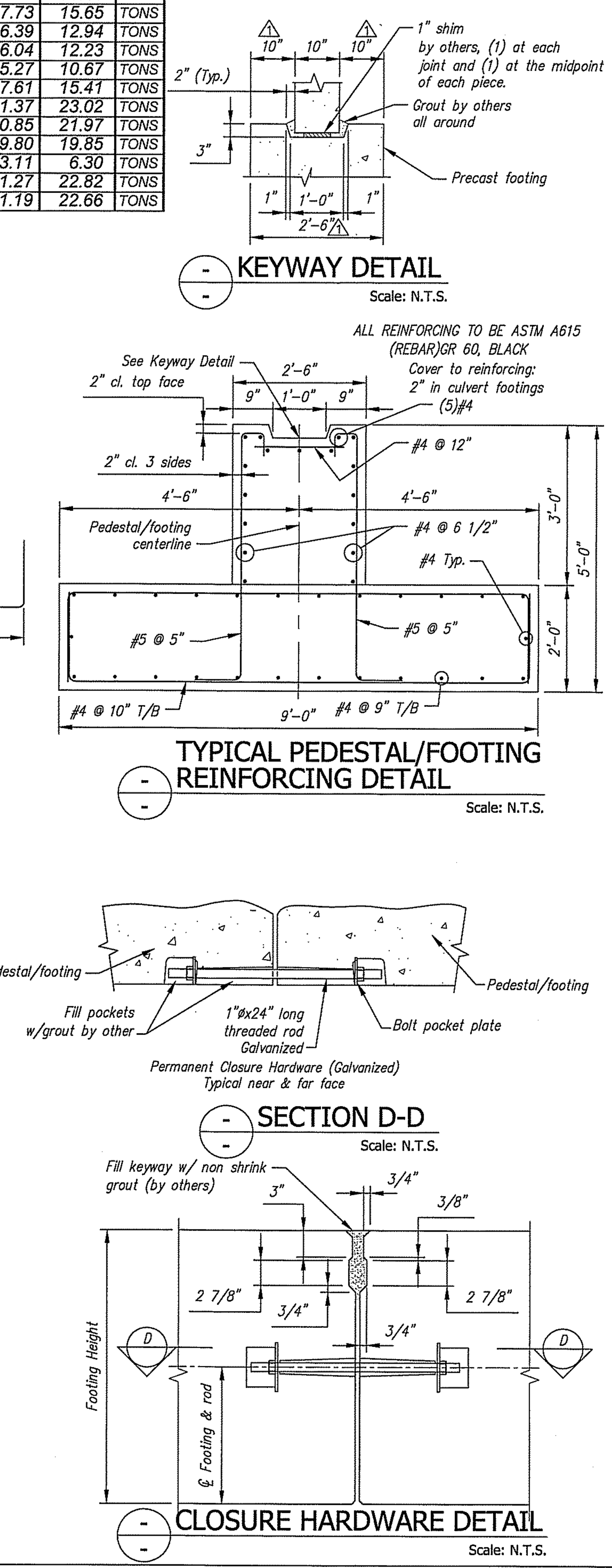

KEYWAY DETAIL — Scale: N.T.S.

TYPICAL PEDESTAL/FOOTING REINFORCING DETAIL — Scale: N.T.S.

SECTION D-D — Scale: N.T.S.

CLOSURE HARDWARE DETAIL — Scale: N.T.S.

Contractor is to verify that all information shown on drawings has been thoroughly checked, complies with the contract documents and is adequate to meet the field conditions. Some dimensions and details may differ slightly from contract drawings to accommodate the manufacturing or design process. Approval of this drawing indicates that any deviation from the contract documents has been reviewed and found to be acceptable. Production will not commence until receipt of signed, approved shop drawings.

This drawing contains information proprietary to CONCRETE SYSTEMS, INC. This drawing is disclosed with the understanding that it will be retained in confidence and its use limited solely to the purpose for which it is disclosed. It is understood that no reproduction of this drawing is authorized without permission from CONCRETE SYSTEMS, INC. and that it will be returned to CONCRETE SYSTEMS, INC. upon request.

STATE OF VERMONT — CHRISTOPHER M. VICK — NO. 77928 Structural — LICENSED PROFESSIONAL ENGINEER — 5/20/15

Stamp for structural design only

REVISIONS

Rev.	Date	DESCRIPTION	By
7			
6			
5			
4			
3			
2			
1	14MAY2015	REVISED PER CUSTOMER REVIEW, MOVED WW4, ADDED F3A & F3B, REVISED GUARDRAIL ANCHORS	RY

This drawing is based upon information provided from the following documents and/or sources:

Engineer: STATE OF VT/AOT PROGRAM DEVELOPMENT
Project No: ----
Drawings: STATE OF VT/AOT PROPOSED IMPROVEMENT BRIDGE PROJECT, TOWN OF RICHFORD SHEETS 1,2,4,22,23,24 OF 36
Specifications: STANDARD SPECIFICATIONS FOR CONSTRUCTION DATED 2011

Other Sources: ----

Concrete Systems Inc.
9 Commercial St., Hudson, NH,03051
Phone 603-889-4163
Fax 603-889-2417

STATE AGENCY — VTrans

Drawn By: R. YEAGER — Date: 31MAR2015
Reviewed By: B. KOLAWOLE — Date:
Approved By: — Date:

G.W. TATRO CONSTRUCTION, INC.
VT/AOT BRIDGE REPLACEMENT– ROAD IMPROVEMENT
RICHFORD, VT.

D — 26' SPAN X 10' RISE 3-SIDED CULVERT — REV 1

Drawing No. C22312-L01A

Quantity: 1 — Project No: BRF030229 — SHEET 1 OF 2

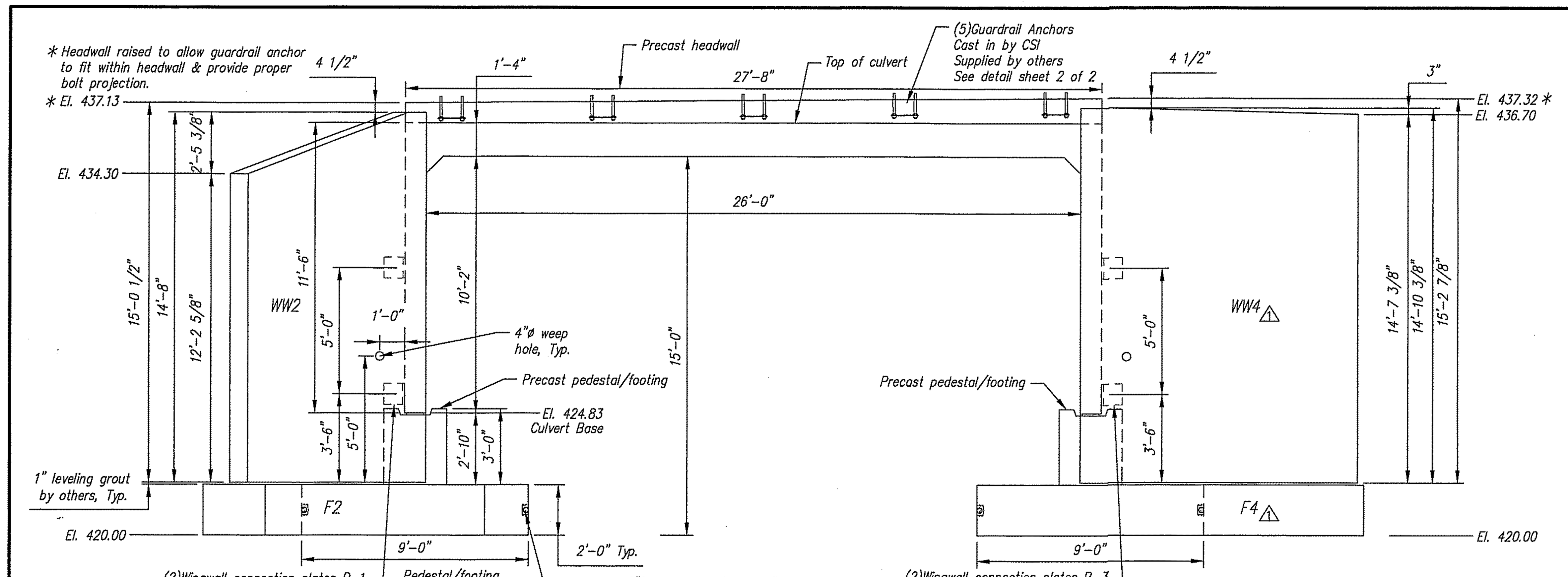

ELEVATION A-A
Scale: 1/4" = 1'-0"

WINGWALL GENERAL NOTES:

1. Reference standard:
   AASHTO LRFD Specifications
2. Design Parameters:
   Nominal Bearing Resistance: 10 ksf (Footing width > 6ft.)
   Earth Cover: 1.0'±
   Concrete: Design strength f'c = 5000 psi
   Unit weight = 150 pcf
   Reinforcing: Z-BAR(rebar), GR 60(VTAOT Level II)
   Soil: Unit weight = 125 pcf
   Minimum lateral pressure coefficient .25
   Maximum lateral pressure coefficient .50
   Cover to reinforcing: 2" u.n.o.
3. The wingwalls have been designed for general site conditions. The project engineer shall be responsible for the structure's suitability to the existing site conditions and for the hydraulic evaluation, including scour and confirmation of soil conditions.
4. Prior to construction, contractor must verify all elevations shown through the engineer.

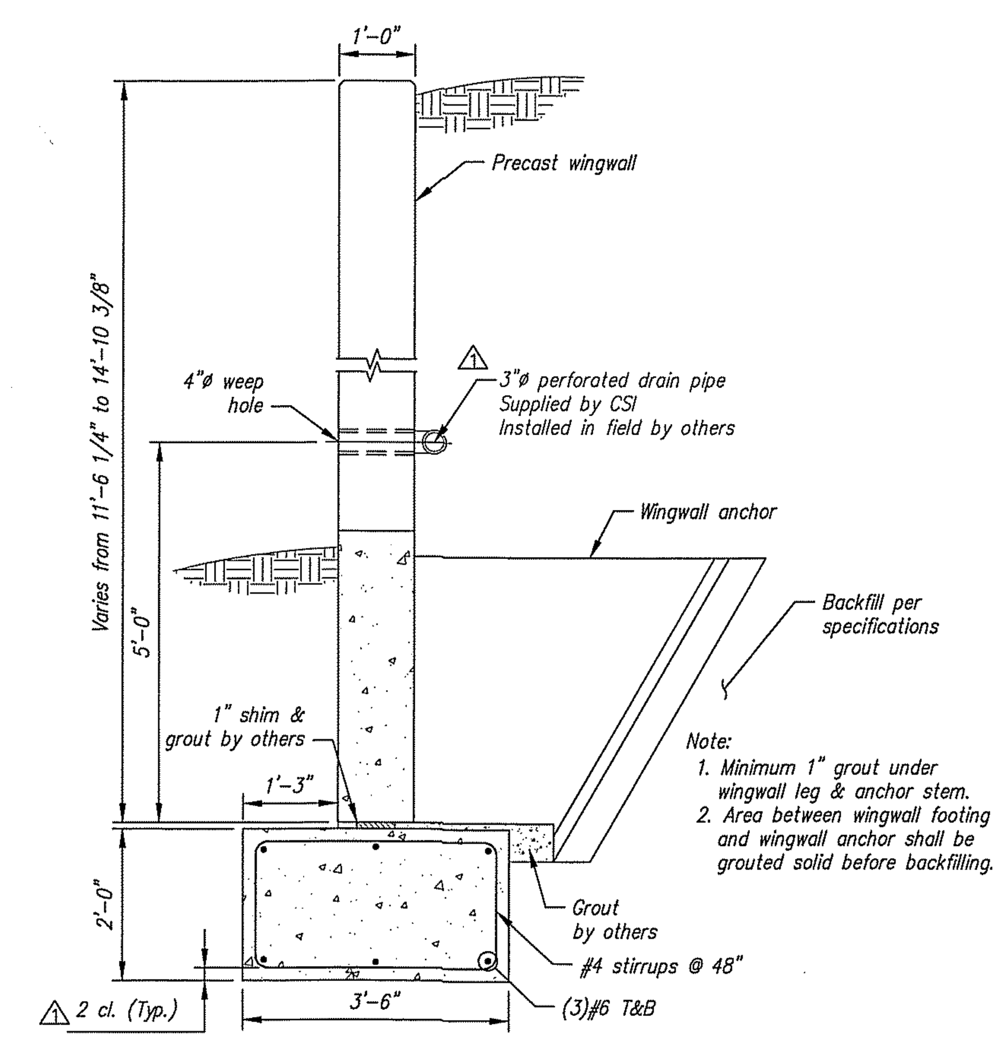

TYPICAL WINGWALL DETAILS
Scale: N.T.S.

BACKFILL DESCRIPTION							
Group Classification	A-1		A-3	A-2			
	A-1-a	A-1-b		A-2-4	A-2-5	A-2-6	A-2-7
Sieve Analysis, Percent Passing							
No. 10	50 max.						
No. 40	30 max.	50 max.	51 min.				
No. 200	15 max.	25 max.	10 max.	35 max.	35 max.	35 max.	35 max.
Characteristics of Fraction Passing No. 40							
Liquid Limit				40 max.	41 min.	40 max.	41 min.
Plasticity Index	6 max.		N.P.	10 max.	10 max.	11 min.	11 min.
Usual Types of Significant Constituent Materials	Stone Fragments, Gravel & Sand		Fine Sand	Silty or Clayey Gravel and Sand			
General Rating as Subgrade	Excellent to Good						

NOTES
1. BACKFILLING OPERATIONS WITHIN THE C.B.Z. SHALL BE PERFORMED IN LIFTS OF 8" OR LESS (LOOSE DEPTH).
2. MAXIMUM DRY DENSITY SHALL BE DETERMINED BY AASHTO T-99 OR OTHER APPROVED METHODS.
3. BACKFILL SHALL BE COMPACTED IN LAYERS UNTIL THE DENSITY IS NOT LESS THAN 95% OF THE MAXIMUM DRY DENSITY.

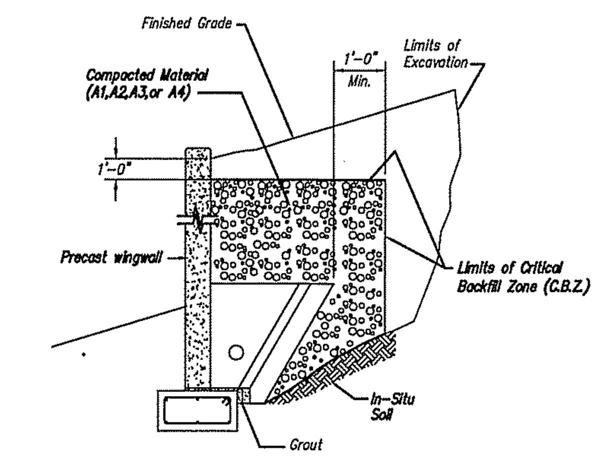

WINGWALL BACKFILL REQUIREMENTS

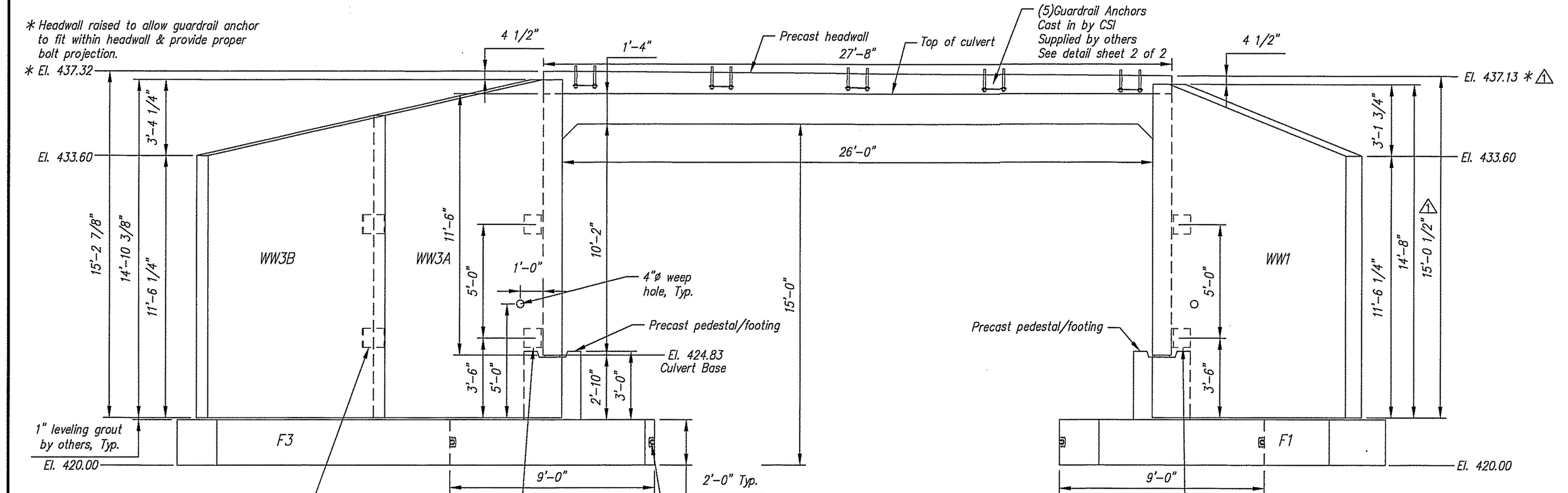

ELEVATION B-B
Scale: 1/4" = 1'-0"

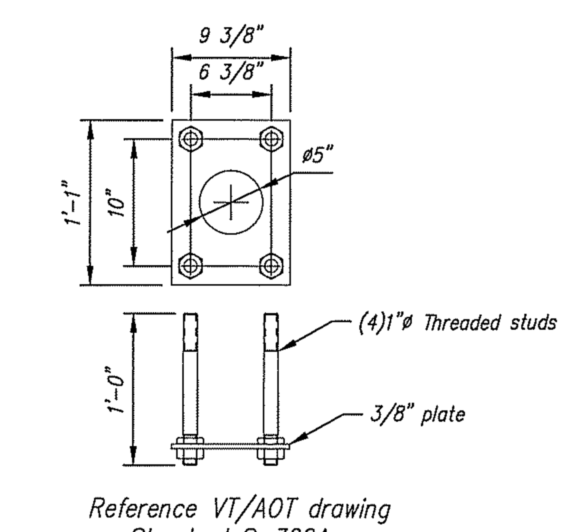

GUARDRAIL ANCHOR DETAIL
Scale: N.T.S.

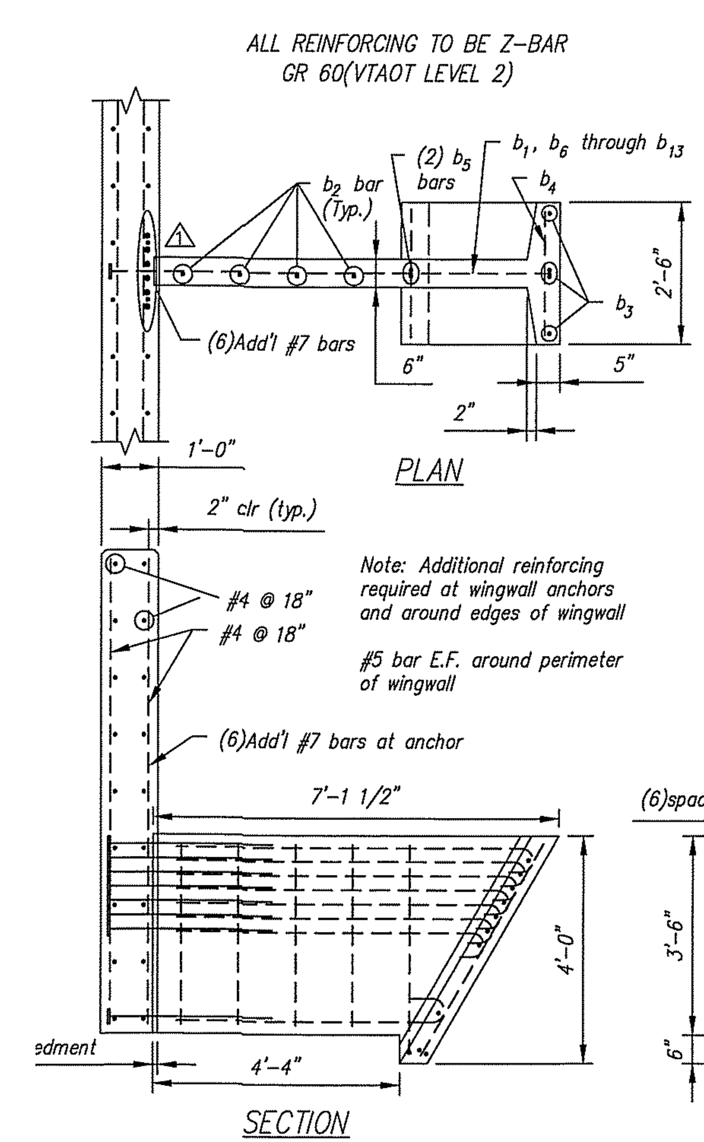

BAR LIST					
MARK	QTY.	SIZE	a	TYPE	LENGTH
b_1	8	#6	3'-0"	3	———
b_2	4	#5	———	Str.	3'-2"
b_3	4	#5	———	Str.	4'-3"
b_4	11	#5	———	Str.	2'-2"
b_5	2	#5	3'-8"	2	———
b_6	1	#5	4'-9"	1	———
b_7	1	#5	5'-4"	1	———
b_8	1	#5	5'-6"	1	———
b_9	1	#5	5'-8"	1	———
b_{10}	1	#5	5'-10"	1	———
b_{11}	1	#5	6'-0"	1	———
b_{12}	1	#5	6'-1"	1	———
b_{13}	1	#5	6'-3"	1	———

Note: "Str." denotes straight bar.
Standard clearance = 2"

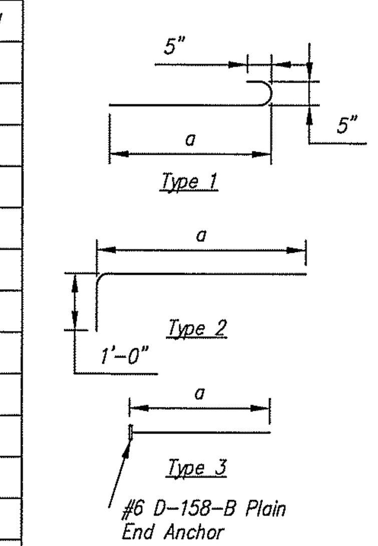

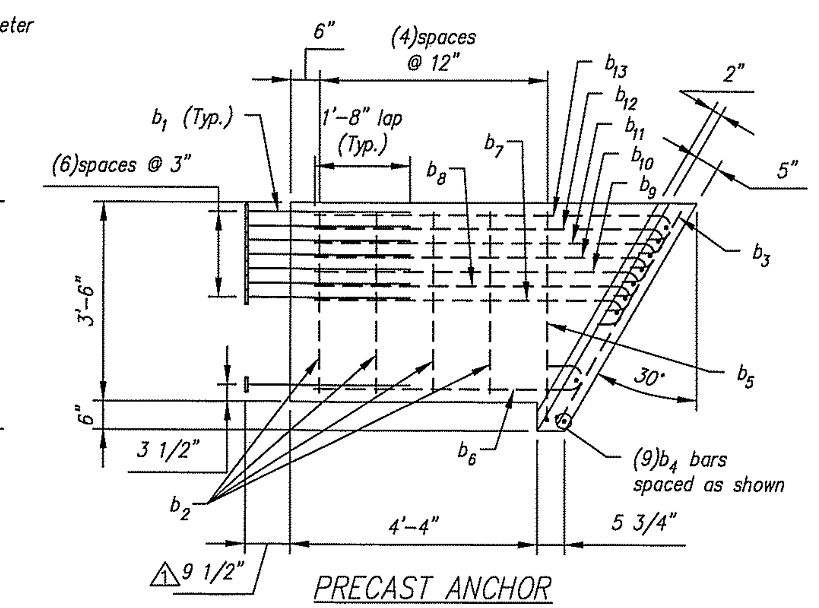

PRECAST ANCHOR TYPE E

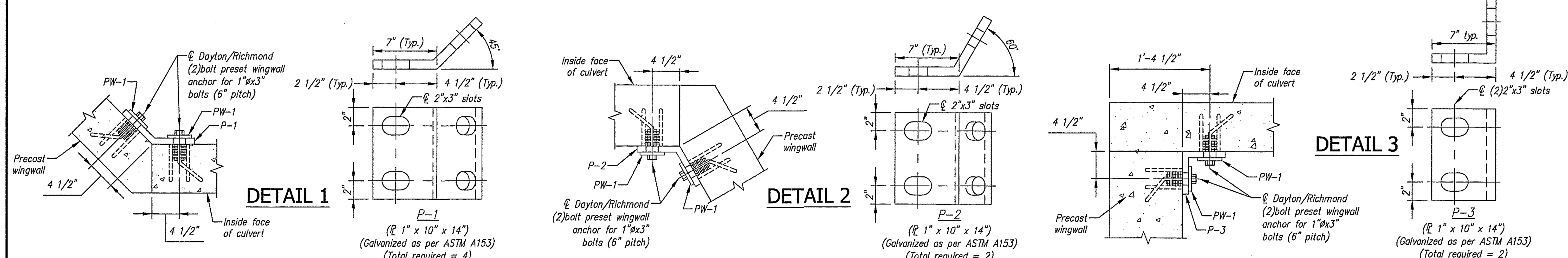

Note: All wingwall joints are covered with 2' wide strip of barrier membrane by others. See note, Sheet 1, Plan View.

WINGWALL CONNECTION PLATE DETAILS
Scale: N.T.S.

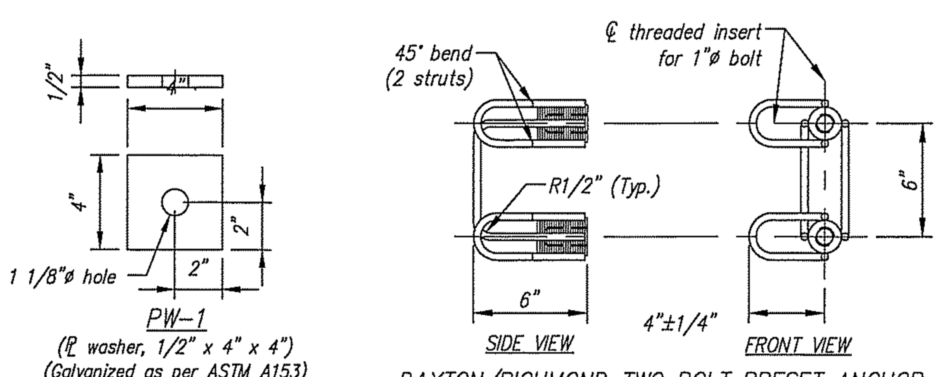

DAYTON/RICHMOND TWO BOLT PRESET ANCHOR
⚠ Anchors are available in plated finish.
Anchors are not designed for use with hot dip galvanized hardware

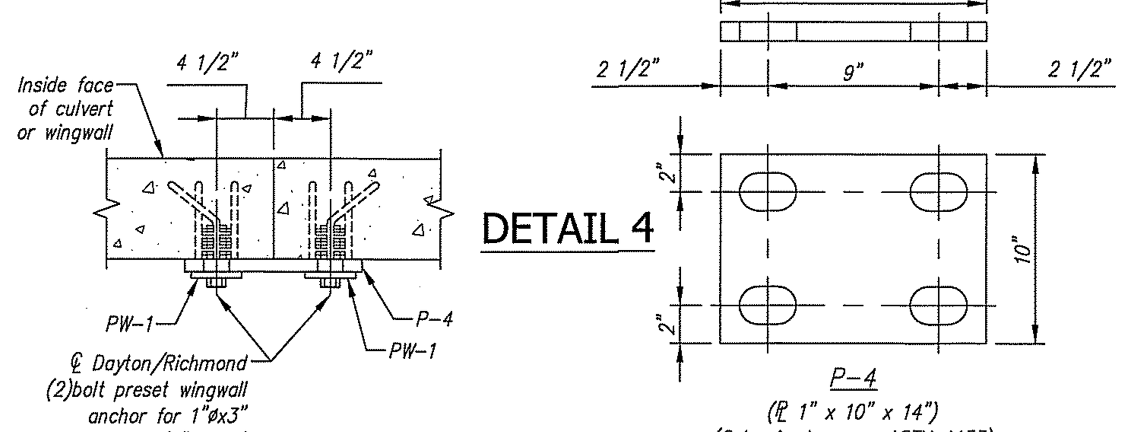

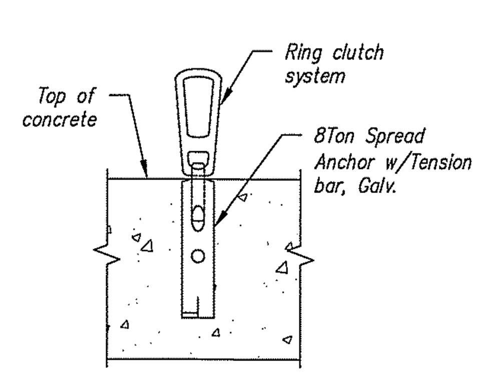

FOOTING LIFTING HARDWARE DETAIL
Scale: N.T.S.

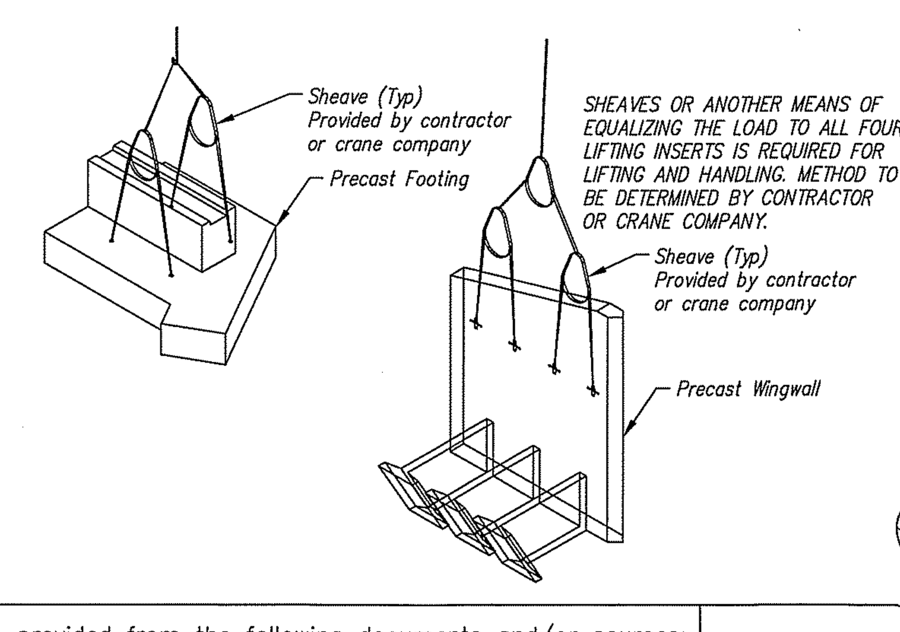

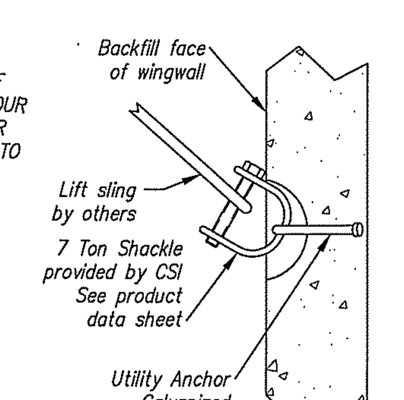

WINGWALL LIFTING DETAIL
Scale: N.T.S.

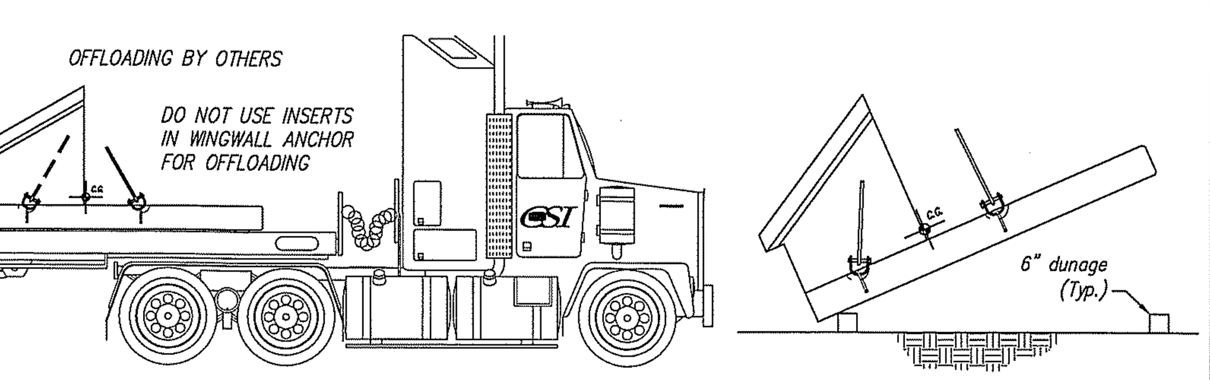

WINGWALL OFFLOADING & TRIPPING DETAIL
Scale: N.T.S.

Contractor is to verify that all information shown on drawings has been thoroughly checked, complies with the contract documents and is adequate to meet the field conditions. Some dimensions and details may differ slightly from contract drawings to accommodate the manufacturing or design process. Approval of this drawing indicates that any deviation from the contract documents has been reviewed and found to be acceptable. Production will not commence until receipt of signed, approved shop drawings.

This drawing contains information proprietary to CONCRETE SYSTEMS, INC. This drawing is disclosed with the understanding that it will be retained in confidence and its use limited solely to the purpose for which it is disclosed. It is understood that no reproduction of this drawing is authorized without permission from CONCRETE SYSTEMS, INC. and that it will be returned to CONCRETE SYSTEMS, INC. upon request.

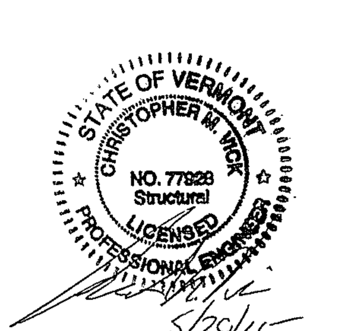

Stamp for structural design only

Rev.	Date	DESCRIPTION	By
7			
6			
5			
4			
3			
2			
1	14MAY2015	REVISED PER CUSTOMER REVIEW, SEE SHEET 1	RY

REVISIONS

This drawing is based upon information provided from the following documents and/or sources:
Engineer: STATE OF VT/AOT PROGRAM DEVELOPMENT
Project No: ----
Drawings: STATE OF VT/AOT PROPOSED IMPROVEMENT BRIDGE PROJECT, TOWN OF RICHFORD SHEETS 1,2,4,22,23,24 OF 36
Specifications: STANDARD SPECIFICATIONS FOR CONSTRUCTION DATED 2011

Other Sources: ----

Concrete Systems Inc.
9 Commercial St., Hudson, NH,03051
Phone 603-889-4163
Fax 603-889-2417

STATE AGENCY
VTrans Working to Get You There

Drawn By	Date
R. YEAGER	31MAR2015
Reviewed By	Date
B. KOLAWOLE	
Approved By	Date

G.W. TATRO CONSTRUCTION, INC.
VT/AOT BRIDGE REPLACEMENT- ROAD IMPROVEMENT
RICHFORD, VT.

D — 26' SPAN X 10' RISE 3-SIDED CULVERT — REV 1
Drawing No. C22312-L01B
Quantity: 1 | Project No: BRF030229 | SHEET 2 OF 2

DESIGN CALCULATIONS FOR PRECAST CONCRETE 3 SIDED CULVERT

REV 1 (05/19/15)

PROPOSED IMPROVEMENT
ROUTE TH3 BRIDGE #6
RICHMOND, VT

STATE OF VERMONT
CHRISTOPHER M. VICK
NO. 77928
Structural
LICENSED
PROFESSIONAL ENGINEER
5/20/15

G W TATRO CONSTRUCTION

CONCRETE SYSTEMS, INC.
9 COMMERCIAL STREET
HUDSON, NH

CSI Drawing No C22312- LO1

TABLE OF CONTENTS

Section #	Description	Total Pages
1	Summary of Design Information	1
2	Mathcad Calculations : 26' x 10' 3-Sided Culvert: HL93, 0.5'-1' Earth Cover	12
3	STAAD Pro Output Fixed: 26' x 10' 3-Sided Culvert: HL93, 0.5'-1' Earth Cover Incl. BM & SF diagrams	39
4	STAAD Pro Output Spring: 26' x 10' 3-Sided Culvert: HL93, 0.5'-1' Earth Cover Incl. BM & SF diagrams	39
5	Mathcad Calculations : Pedestal and Footing	5
6	STAAD Pro Output: 3' high Pedestal Incl. BM & SF diagrams	10
7	CSI LRFD Wing Wall 1 Calculations	17
8	CSI LRFD Wing Wall 2 Calculations	14
9	CSI LRFD Wing Wall 3A Calculations	14
10	CSI LRFD Wing Wall 3B Calculations	14
11	CSI LRFD Wing Wall 4 Calculations	14
12	Bridge Load Rating	48
	TOTAL	227

9 Commercial Street Hudson, New Hampshire 03051 Phone (603) 889-4163
Fax Number: Precast Sales (603) 889-0039
Fax Number: Manhole Design and Engineering (603) 598-1344

Section 1

Summary of Design Information

REFERENCES:

AASHTO LRFD Bridge Design Specifications
ASTM C1504 Standard Specifications for Precast Reinforced Concrete 3 Sided Structures for Culverts, Storm Drains and Sewers
ACI 318 Building Code Requirements for Structural Concrete
NPCA Quality Control Manual for Precast Plants
Plans: Proposed Improvement Route TH3 Bridge #6, Richmond VT; sheet 1 of 36 to sheet 36 of 36
Specifications: Section 540: 4 pages

COMPUTER PROGRAMS:

Mathcad
STAAD Pro
CSI LRFD Wing wall Spreadsheet

DESIGN PARAMETERS:

Concrete:
Design strength f'c = 5000 psi
Unit weight = 150 pcf
Reinforcing:
Yield strength fy = 60,000 psi
Cover to reinforcing = 2" Top of Top Slab; 1.5" elsewhere u.n.o.

Soil: *Unit weight = 140 pcf*
Lateral earth pressure coefficient (max.) = .50
Lateral earth pressure coefficient (min.) = .25

Earth Cover: *0.5' – 1.0'*

Live Load: *HL93*

Section 2
Mathcad Calculations
26’ x 10’ 3-Sided Culvert
HL93, 0.5’-1.0’ Earth Cover

LRFD METHOD

26 ft x 10ft (3 sided - bottom open) HL93; Earth Cover : 0.5ft - 1.0ft

Reference Dwg:
C22312-LO1

REFERENCES:

1. ASTM C1504 Standard Specification for Precast Concrete 3-Sided Culverts,Storm Drains and Sewers;
2. AASHTO LRFD Bridge Design Specifications
3. Attachment A: STAAD.Pro Computer Output for Culvert; Fixed Support in Global X-Dir. at Joint 2 and Bending Moment & Shear Force Diagrams - HL93
4. Attachment B: STAAD.Pro Computer Output for Culvert; Spring Support (200 kips/ft) in Global X-Dir. at Joint 2 and Bending Moment & Shear Force Diagrams - HL93

DESIGN PARAMETERS:

$\gamma_w := 62.4 \cdot \frac{lbf}{ft^3}$ unit weight of water

$\gamma_c := 150 \cdot \frac{lbf}{ft^3}$ unit weight of concrete

$\gamma_e := 140 \cdot \frac{lbf}{ft^3}$ unit weight of earth

$DE_1 := 0.5 \quad ft$ Depth of earth Cover -Min

$DE_2 := 1.0 \quad ft$ Depth of earth Cover -Max

$DE_{ave} := \frac{DE_1 + DE_2}{2} = 0.75 \quad ft$ Depth of earth Cover -Average

$L_T := 10 \cdot in$ Length of tire contact area -parallel to span

$K_{max} := .5$ max. earth pressure coefficient

$LLDF := 1.10$ factor for distribution of live load with depth of fill

$K_{min} := .25$ min. earth pressure coefficient

Geometry:

$ClearSpan := 26 \cdot ft$ ClearSpan

$ClearRise := 10 \cdot ft$ ClearRise

Member Properties:

$b_v := 12 \cdot in$ design section width

$t_t := 16 \cdot in$ top slab thickness

$t_w := 10 \cdot in$ wall thickness

$L_{Section} := 7.5 \cdot ft$ Section Length

$Span := ClearSpan + t_w = 26.833 \ ft$

$Rise := ClearRise + \left(\frac{t_t}{2}\right) = 10.667 \ ft$

$t_{Min} := \frac{ClearSpan + 10 \cdot ft}{30} = 1.2 \ ft$ Estimate Slab Thickness

AASHTO Table 2.5.2.6.3-1

$F_e := 1 + 0.2 \cdot \frac{DE_{ave} \cdot ft}{ClearSpan + 2 \cdot t_w} = 1.005$ **Soil-Structure Interaction Factor**

AASHTO Eqn 12.11.2.2.1-2

Dead Load: (DL)

$D_{pav} := F_e \cdot \gamma_e \cdot DE_{ave} \cdot ft \cdot 1 \cdot ft = 105.569 \ \frac{lbf}{ft}$ Dead Load

Live Load: Design Truck

Multiple presence factor $M := 1.2$

$F_1 := 8000 \cdot lbf$ Axle load 1 $F_{23} := 32000 \cdot lbf$ Axle load 2 & 3

$Im := 33 \cdot (1.0 - 0.125 \cdot DE_1)$ $Im = 30.938$ Dynamic load allowance $I_i := 1 + \frac{Im}{100} = 1.309$

$I := \max(1, I_i)$ $I = 1.309$

$E_{perp} := 96 \cdot in + \left(1.44 \cdot \frac{ClearSpan}{12}\right) = 11.12 \ ft$ Distribution - perpendicular to span

$E_{para} := L_T + (LLDF \cdot DE_1 \cdot in) = 0.879 \ ft$ Distribution - parallel to span

$D := 6 \cdot ft$ Wheel spacing across a Design truck $D1 := 14 \cdot ft$ Typical Axle spacing

$P1 := \frac{M \cdot I \cdot F_1 \cdot ft}{E_{perp}} = (1.13 \cdot 10^3) \ lbf$ $P2 := \frac{M \cdot I \cdot F_{23} \cdot ft}{E_{perp}} = (4.522 \cdot 10^3) \ lbf$

$P3 := \frac{M \cdot I \cdot F_{23} \cdot ft}{E_{perp}} = (4.522 \cdot 10^3) \ lbf$

Live Load: Design Tandem

$F_{34} := 25000 \cdot lbf$ Axle load 3 & 4 Multiple presence factor $M := 1.2$

$Im := 33 \cdot (1.0 - 0.125 \cdot DE_1)$ $Im = 30.938$ Dynamic load allowance $I_i := 1 + \frac{Im}{100} = 1.309$

$I := \max(1, I_i)$ $I = 1.309$

$E_{perp} := 96 \cdot in + \left(1.44 \cdot \frac{ClearSpan}{12}\right) = 11.12 \ ft$ Distribution - perpendicular to span

$E_{para} := L_T + (LLDF \cdot DE_1 \cdot in) = 0.879 \ ft$ Distribution - parallel to span

$D := 6 \cdot ft$ Wheel spacing across a Design tandem

$P3 := \frac{M \cdot I \cdot F_{34} \cdot ft}{E_{perp}} = (3.532 \cdot 10^3) \ lbf$ $D3 := 4 \cdot ft$ Distance between Axles of a Design tandem

Live Load: Design Lane load

Applicable only if Span is greater than 15ft

$W_{10} := 640 \cdot \frac{lbf}{ft}$ Design Lane load over 10 ft width

$W_1 := \frac{W_{10}}{10} = 64 \frac{lbf}{ft}$ Lane Load

Lateral Earth Pressure:

$H1 := DE_2 \cdot ft + t_t = 2.333\ ft$

soil depth at top of wall

$H2 := H1 + ClearRise = 12.333\ ft$

soil depth at bottom of wall

$LEPMIN := K_{min} \cdot \gamma_e \cdot 1 \cdot ft = 35 \frac{lbf}{ft^2}$

minimum lateral earth pressure

$LEPMAX := K_{max} \cdot \gamma_e \cdot 1 \cdot ft = 70 \frac{lbf}{ft^2}$

maximum lateral earth pressure

Minimum **(EMIN)**

top of wall

$w_{et} := H1 \cdot LEPMIN = 81.667 \frac{lbf}{ft}$

bottom of wall

$w_{eb} := H2 \cdot LEPMIN = 431.667 \frac{lbf}{ft}$

Maximum **(EMAX)**

$w_{et} := H1 \cdot LEPMAX = 163.333 \frac{lbf}{ft}$

$w_{eb} := H2 \cdot LEPMAX = 863.333 \frac{lbf}{ft}$

Approaching Wheel Load (Surcharge) : (AWL)

$w_a := (3.0 \cdot ft) \cdot \gamma_e \cdot ft \cdot K_{max} = 210 \frac{lbf}{ft}$

Internal Fluid Pressure: (IFP)

$w_{ib} := \gamma_w \cdot ClearRise \cdot 1 \cdot ft = 624 \frac{lbf}{ft}$

bottom of wall

Design Load Combinations:

The following load combinations are considered:

1. *DEFLECTION CHECK (Load Cases 600):*
   1.0LL + 1.0Emin
2. *Spring check (Load Cases 500):*
   1.0DL +1.0LL

STRENGTH I

3. *For the Maximum Moments & Forces in the Culvert:*

- *1.35 DL+ 1.75LL + 1.35Emax+1.75AWL - For Max. Outside the Culvert (Negative) Moment in the walls and slab) - Load Cases 100's;*
- *1.35 DL+ 1.75LL + 1.0Emin+1.0Wins - For Max. Inside of the Culvert (Positive) Moment in the slab -- Load Cases 200's.*

4. *Cracking Load Combinations:*

- *1.0 DL+ 1.0LL + 1.0Emax+1.0AWL - For Max. Outside the Culvert (Negative) Moment in the walls and slab) - Load Cases 300's;*
- *1.0 DL+ 1.0LL + 1.0Emin+1.0Wins - For Max. Inside of the Culvert (Positive) Moment in the slab - Load Cases 400's.*

Where,

- *DL - Dead Load;*
- *LL - Live Load;*
- *E - Soil Pressure Load;*
- *AWL - Approaching Wheel Load (Surcharge);*
- *Wins - Inside Water Pressure Load.*

STAAD.Pro ANALYSIS RESULTS:

$t := t_t$ top slab thickness

Att. No	X-Dir. Support Conditions kips/ft	Max. Support Displ.	Top Slab Negative (Outs. Face) Moment	Top Slab Positive (Ins. Face) Moment
"A":	Fixed	$d := 0 \cdot in$	$M1_{F93} := 41.22 \cdot ft \cdot kip$	$M2_{F93} := 82.27 \cdot ft \cdot kip$
"B":	Spring	$d := 0.124 \cdot in$	$M1_{S93} := 43.16 \cdot ft \cdot kip$	$M2_{S93} := 86.20 \cdot ft \cdot kip$

X-Dir. Support Conditions kips/ft	Wall Negative (Outs. Face) Moment	Wall Shear	Top Slab Shear
Fixed	$M3_{F93} := 40.78 \cdot ft \cdot kip$	$Vw_{F93} := 8.59 \cdot kip$	$Vs_{F93} := 18.52 \cdot kip$
Spring	$M3_{S93} := 42.60 \cdot ft \cdot kip$	$Vw_{S93} := 8.77 \cdot kip$	$Vs_{S93} := 18.52 \cdot kip$

$M_{uSN} := \max(M1_{F93}, M1_{S93}) = (4.316 \cdot 10^4)\ ft \cdot lbf$ Max Negative Moment in Top Slab

$M_{uSP} := \max(M2_{F93}, M2_{S93}) = (8.62 \cdot 10^4)\ ft \cdot lbf$ Max Positive Moment in Top Slab

$M_{uW} := \max(M3_{F93}, M3_{S93}) = (4.26 \cdot 10^4)\ ft \cdot lbf$ Max Negative Moment in Wall

$V_{uW} := \max(Vw_{F93}, Vw_{S93}) = 8.77\ kip$ Max Shear in Wall

$V_{uS} := \max(Vs_{F93}, Vs_{S93}) = 18.52\ kip$ Max Shear in Top Slab

TOP SLAB, BOTTOM REINFORCEMENT; Members 3 & 4:

Shear Capacity

$f_c := 5\ ksi$ $c := 1.5 \cdot in$ rebar clear distance $d_b := 0.875 \cdot in$ bar diameter

$d_{v1} := 0.9 \cdot d = 12.656\ in$ $d := t - c - \frac{d_b}{2} = 14.063\ in$ $\beta := 2$

$d_{v2} := 0.72 \cdot t = 11.52\ in$ $d_v := \max(d_{v1}, d_{v2}) = 12.656\ in$

$\phi V_c := .9 \cdot .0316 \cdot \beta \cdot \sqrt{f_c} \cdot ksi \cdot b_v \cdot d_v = (1.932 \cdot 10^4)\ lbf$ $V_{uS} = (1.852 \cdot 10^4)\ lbf$

$\text{if}(\phi V_c > V_{uS}, \text{"OK"}, \text{"NG See further analysis below"}) = \text{"OK"}$

Minimum Reinforcement:

Check Minimum Reinforcement, Ratio of Reinforcement Area to GROSS Concrete Area:

***** 3-Sided Culvert - AASHTO 12.14.5.8**
Ast/Agross = 0.002:
Primary reinforcement in the direction of the span, at all cross sections subject to flexural tension, at the inside face of walls, and in each direction at the top of the slabs if cover <2ft.;

$A_{sMin} := 12 \cdot in \cdot t \cdot 0.002 = 0.384\ in^2$

Temperature & Shrinkage Reinforcement;

$A_{st} := 12 \cdot in \cdot \frac{t}{2} \cdot 0.002 = 0.192\ in^2$ **Use #4 @ 12in ;**

Positive (Inside Face) Moment:

$A_s := 1.8 \cdot in^2$ **Selected Steel Area; Use #7 @ 4in As = 1.8in^2**

$f_c := 5000\ psi$

$SpacingUsed := 4$ Spacing

$f_y := 60000$

$a := \frac{A_s \cdot f_y}{.85 \cdot f_c \cdot 12 \cdot in} = 2.118\ in$

$f_y := 60000 \cdot psi$

$\phi M_n := .95 \cdot A_s \cdot f_y \cdot \left(d - \frac{a}{2}\right) = \left(1.112 \cdot 10^5\right)\ ft \cdot lbf$

$M_{uSP} = \left(8.62 \cdot 10^4\right)\ ft \cdot lbf$

$\text{if}\left(\phi M_n > M_{uSP}, \text{"OK"}, \text{"NG"}\right) = \text{"OK"}$

AASHTO Crack Control: Top Slab (Critical Ms)

***** Culvert - AASHTO 5.7.3.4 & 12.14.5.7**

$M_s := 53830 \cdot ft \cdot lbf$ Service Load Moment

$N_s := 1940 \cdot lbf$ Axial thrust at Service limit state (Value Concurrent with Ms)

$e := \frac{M_s}{N_s} + \left(d - \frac{t}{2}\right) = 339.032\ in$

$j := 0.74 + 0.1 \cdot \left(\frac{e}{d}\right) = 3.151$

$j_{max} := .9$

$j1 := min\left(j, j_{max}\right)$

$j1 = 0.9$

$i := \frac{1}{1 - \frac{j1 \cdot d}{e}} = 1.039$

$f_s := \frac{M_s + N_s \cdot \left(d - \frac{t}{2}\right)}{A_s \cdot j1 \cdot i \cdot d} = \left(2.779 \cdot 10^4\right)\ psi$ Reinforcement stress under service load condition

$d_c := c + \frac{d_b}{2} = 1.938\ in$

$\gamma_e := 0.75$ Class 2 Exposure factor

$\beta_s := 1 + \frac{d_c}{0.7 \cdot (t - d_c)} = 1.197$

$Spacing := \frac{700 \cdot \gamma_e}{\beta_s \cdot \frac{f_s}{ksi}} - 2 \cdot \frac{d_c}{in} = 11.908$

$\text{if}(Spacing > SpacingUsed, \text{"OK"}, \text{"NG"}) = \text{"OK"}$

AASHTO Crack Control: Top Slab (Critical Ns)

***** Culvert - AASHTO 5.7.3.4 & 12.14.5.7**

$N_s := 5770 \cdot lbf$ Axial thrust at Service limit state

$M_s := 43790 \cdot ft \cdot lbf$ Service Load Moment (Value Concurrent with Ns)

$e := \frac{M_s}{N_s} + \left(d - \frac{t}{2}\right) = 97.134\ in$

$j := 0.74 + 0.1 \cdot \left(\frac{e}{d}\right) = 1.431$ $j_{max} := .9$ $j1 := min(j, j_{max})$ $j1 = 0.9$

$i := \frac{1}{1 - \frac{j1 \cdot d}{e}} = 1.15$

$f_s := \frac{M_s + N_s \cdot \left(d - \frac{t}{2}\right)}{A_s \cdot j1 \cdot i \cdot d} = (2.14 \cdot 10^4)\ psi$ Reinforcement stress under service load condition

$d_c := c + \frac{d_b}{2} = 1.938\ in$

$\gamma_e := 0.75$ Class 2 Exposure factor

$\beta_s := 1 + \frac{d_c}{0.7 \cdot (t - d_c)} = 1.197$

$Spacing := \frac{700 \cdot \gamma_e}{\beta_s \cdot \frac{f_s}{ksi}} - 2 \cdot \frac{d_c}{in} = 16.627$

$\text{if}(Spacing > SpacingUsed, \text{"OK"}, \text{"NG"}) = \text{"OK"}$

Top Slab: Bottom Distribution Reinforcement:

*** - AASHTO 9.7.3.2; $DE_2 = 1$

Bottom Steel Req'd:

$Ws := Span$

$P_{sd} := \frac{100}{Ws^{.5}} \cdot ft^{.5} = 19.305$ $P_{max} := 50$ If the main reinforcement parallel to the traffic;

$A_{sd} := \frac{P}{100} \cdot A_s = 0.347\ in^2$ **Use #4 @ 6.5in ;** $P := min(P_{sd}, P_{max})$

Walls: Members 1 & 2

Shear Capacity

$f_c := 5\ ksi$ $c := 2 \cdot in$ rebar clear distance $d_b := 0.875 \cdot in$ bar diameter

$d := t_w - c - \frac{d_b}{2}$ $d = 7.563\ in$ $\beta := 2$

$d_{v1} := 0.9 \cdot d = 6.806\ in$

$d_{v2} := 0.72 \cdot t_w = 7.2\ in$ $d_v := \max(d_{v1}, d_{v2}) = 7.2\ in$

$\phi V_c := 0.9 \cdot .0316 \cdot \beta \cdot \sqrt{f_c} \cdot ksi \cdot b_v \cdot d_v = (1.099 \cdot 10^4)\ lbf$ $V_{uW} = (8.77 \cdot 10^3)\ lbf$

$\text{if}(\phi V_c > V_{uW}, \text{"OK"}, \text{"NG"}) = \text{"OK"}$

Minimum Reinforcement:

Check Minimum Reinforcement, Ratio of Reinforcement Area to GROSS Concrete Area:

***** 3-Sided Culvert - AASHTO 12.14.5.8**
Ast/Agross = 0.002:
Primary reinforcement in the direction of the span, at all cross sections subject to flexural tension, at the inside face of walls, and in each direction at the top of the slabs if cover <2ft.;

$A_{sMin} := 12 \cdot in \cdot t_w \cdot 0.002 = 0.24\ in^2$

Negative (Outside Face) Moment
(Use the Same Reinforcement as in the Top Slab:

$A_s := 1.44 \cdot in^2$ **Selected Steel Area;**
Use #7 @ 5in As= 1.44in^2

$SpacingUsed := 5$ Spacing

$f_c := 5000\ psi$

$f_y := 60000$ $a := \frac{A_s \cdot f_y}{.85 \cdot f_c \cdot 12 \cdot in} = 1.694\ in$ $f_y := 60000 \cdot psi$

$\phi M_n := .95 \cdot A_s \cdot f_y \cdot \left(d - \frac{a}{2}\right) = (4.593 \cdot 10^4)\ ft \cdot lbf$ $M_{uW} = (4.26 \cdot 10^4)\ ft \cdot lbf$

$$\text{if}\left(\phi M_n > M_{uW}, \text{"OK"}, \text{"NG"}\right) = \text{"OK"}$$

AASHTO Crack Control: Wall (Critical Ms)

***** Culvert - AASHTO 5.7.3.4 & 12.14.5.7**

$M_s := 27370 \cdot ft \cdot lbf$ Service Load Moment

$N_s := 8180 \cdot lbf$ Axial thrust at Service limit state (Value Concurrent with Ms)

$$e := \frac{M_s}{N_s} + \left(d - \frac{t}{2}\right) = 39.714\ in$$

$$j := 0.74 + 0.1 \cdot \left(\frac{e}{d}\right) = 1.265 \qquad j_{max} := .9 \qquad j1 := min\left(j, j_{max}\right) \qquad j1 = 0.9$$

$$i := \frac{1}{1 - \frac{j1 \cdot d}{e}} = 1.207$$

$$f_s := \frac{M_s + N_s \cdot \left(d - \frac{t}{2}\right)}{A_s \cdot j1 \cdot i \cdot d} = \left(2.747 \cdot 10^4\right)\ psi$$

Reinforcement stress under service load condition

$$d_c := c + \frac{d_b}{2} = 2.438\ in$$

$\gamma_e := 0.75$ Class 2 Exposure factor

$$\beta_s := 1 + \frac{d_c}{0.7 \cdot \left(t - d_c\right)} = 1.257$$

$$Spacing := \frac{700 \cdot \gamma_e}{\beta_s \cdot \frac{f_s}{ksi}} - 2 \cdot \frac{d_c}{in} = 10.335$$

$$\text{if}\left(Spacing > SpacingUsed, \text{"OK"}, \text{"NG"}\right) = \text{"OK"}$$

AASHTO Crack Control: Wall (Critical Ns)

***** Culvert - AASHTO 5.7.3.4 & 12.14.5.7**

$N_s := 11490 \cdot lbf$ Axial thrust at Service limit state

$M_s := 24080 \cdot ft \cdot lbf$ Service Load Moment (Value Concurrent with Ns)

$$e := \frac{M_s}{N_s} + \left(d - \frac{t}{2}\right) = 24.711\ in$$

$$j := 0.74 + 0.1 \cdot \left(\frac{e}{d}\right) = 1.067 \qquad j_{max} := .9 \qquad j1 := min\left(j, j_{max}\right) \qquad j1 = 0.9$$

$$i := \frac{1}{1 - \frac{j1 \cdot d}{e}} = 1.38$$

$$f_s := \frac{M_s + N_s \cdot \left(d - \frac{t}{2}\right)}{A_s \cdot j1 \cdot i \cdot d} = \left(2.099 \cdot 10^4\right)\ psi$$ Reinforcement stress under service load condition

$$d_c := c + \frac{d_b}{2} = 2.438\ in$$

$$\gamma_e := 0.75$$ Class 2 Exposure factor

$$\beta_s := 1 + \frac{d_c}{0.7 \cdot (t - d_c)} = 1.257$$

$$Spacing := \frac{700 \cdot \gamma_e}{\beta_s \cdot \frac{f_s}{ksi}} - 2 \cdot \frac{d_c}{in} = 15.026$$

$$\text{if}\left(Spacing > SpacingUsed, \text{“OK”}, \text{“NG”}\right) = \text{“OK”}$$

Inside Wall Face Vertical Reinforcement;

$$A_{sMin} := 12 \cdot in \cdot t_w \cdot 0.002 = 0.24\ in^2$$ **Use #4 @ 10in ;**

Inside Wall Face Horizontal Reinforcement;

$$A_{st} := 12 \cdot in \cdot \frac{t_w}{2} \cdot 0.002 = 0.12\ in^2$$ **Use #4 @ 18in ;**

TOP SLAB, TOP REINFORCEMENT; End of Span

- Use the same Reinforcement as in the Wall;

Negative (Outside Face) Moment:

$$c := 2.0 \cdot in$$ rebar clear distance

$$d := t - c - \frac{d_b}{2} = 13.563\ in$$

$$A_s := 1.44 \cdot in^2$$ **Selected Steel Area; Use #7 @ 5in As= 1.44in^2**

$$SpacingUsed := 5$$ Spacing

$$f_y := 60000$$

$$a := \frac{A_s \cdot f_y}{.85 \cdot f_c \cdot 12 \cdot in} = 1.694\ in$$

$$f_c := 5000\ psi$$

$$f_y := 60000 \cdot psi$$

$$\phi M_n := .95 \cdot A_s \cdot f_y \cdot \left(d - \frac{a}{2}\right) = \left(8.697 \cdot 10^4\right)\ ft \cdot lbf$$

$$M_{uSN} = \left(4.316 \cdot 10^4\right)\ ft \cdot lbf$$

$$\text{if}\left(\phi M_n > M_{uSN}, \text{“OK”}, \text{“NG”}\right) = \text{“OK”}$$

AASHTO Crack Control: Top Slab (Critical Ms)

*** Culvert - AASHTO 5.7.3.4 & 12.14.5.7

$M_s := 27810 \cdot ft \cdot lbf$ Service Load Moment

$N_s := 5770 \cdot lbf$ Axial thrust at Service limit state (Value Concurrent with Ms)

$$e := \frac{M_s}{N_s} + \left(d - \frac{t}{2}\right) = 63.4\ in$$

$$j := 0.74 + 0.1 \cdot \left(\frac{e}{d}\right) = 1.207$$

$j_{max} := .9$

$j1 := min(j, j_{max})$ $j1 = 0.9$

$$i := \frac{1}{1 - \frac{j1 \cdot d}{e}} = 1.238$$

$$f_s := \frac{M_s + N_s \cdot \left(d - \frac{t}{2}\right)}{A_s \cdot j1 \cdot i \cdot d} = \left(1.681 \cdot 10^4\right)\ psi$$

Reinforcement stress under service load condition

$$d_c := c + \frac{d_b}{2} = 2.438\ in$$

$\gamma_e := 0.75$ Class 2 Exposure factor

$$\beta_s := 1 + \frac{d_c}{0.7 \cdot (t - d_c)} = 1.257$$

$$Spacing := \frac{700 \cdot \gamma_e}{\beta_s \cdot \frac{f_s}{ksi}} - 2 \cdot \frac{d_c}{in} = 19.983$$

$\text{if}(Spacing > SpacingUsed, \text{“OK”}, \text{“NG”}) = \text{“OK”}$

AASHTO Crack Control: Wall (Critical Ns)

*** Culvert - AASHTO 5.7.3.4 & 12.14.5.7

$N_s := 5770 \cdot lbf$ Axial thrust at Service limit state

$M_s := 27810 \cdot ft \cdot lbf$ Service Load Moment (Value Concurrent with Ns)

$$e := \frac{M_s}{N_s} + \left(d - \frac{t}{2}\right) = 63.4\ in$$

$$j := 0.74 + 0.1 \cdot \left(\frac{e}{d}\right) = 1.207$$

$j_{max} := .9$

$j1 := min(j, j_{max})$ $j1 = 0.9$

$$i := \frac{1}{1 - \frac{j1 \cdot d}{e}} = 1.238$$

$$f_s := \frac{M_s + N_s \cdot \left(d - \frac{t}{2}\right)}{A_s \cdot j1 \cdot i \cdot d} = \left(1.681 \cdot 10^4\right)\ psi$$ Reinforcement stress under service load condition

$$d_c := c + \frac{d_b}{2} = 2.438\ in$$

$$\gamma_e := 0.75$$ Class 2 Exposure factor

$$\beta_s := 1 + \frac{d_c}{0.7 \cdot (t - d_c)} = 1.257$$

$$Spacing := \frac{700 \cdot \gamma_e}{\beta_s \cdot \frac{f_s}{ksi}} - 2 \cdot \frac{d_c}{in} = 19.983$$

$$\text{if}(Spacing > SpacingUsed, \text{"OK"}, \text{"NG"}) = \text{"OK"}$$

Calculate a Cut Off Point:-

Per Moment Envelope Diagram, top Reinforcement is not req'd at a distance of 4.5ft from Culvert Inner corner.

$$L_{CutOff} := 4.5 \cdot ft$$ $$d_b = 0.875\ in$$

Use Max. from a1, a2 & a3 (Refer to Section 5.11.1.2.1):

$$a1 := d = 13.563\ in \qquad a2 := 15 \cdot d_b = 13.125\ in \qquad a3 := \frac{Span}{20} = 16.1\ in$$

$$a := \max(a1, a2, a3) = 16.1\ in$$

$$L_{Bar} := L_{CutOff} + a \cdot 1.7 = 6.781\ ft$$

Cut #7 Bars (top Reinforcement) @ a distance of LBar from the culvert Inner Corner.

CHECK DEFLECTION:

Max. Vertical Displacement at Joint 4 from the Load Case #600 (1.0LL):

$$Displ_1 := 0.187 \cdot in$$ **- Fixed Support in Global X-Dir. at Joint 4 - HL 93**

$$Displ_2 := 0.186 \cdot in$$ **- Spring Support in Global X-Dir. at Joint 4 - HL 93**

$$Displ := \max(Displ_1, Displ_2) = 0.187\ in$$

Allowable Displacement: 1/800 of Span Length

$$AllowDispl := \frac{Span}{800} = 0.403\ in$$

$$\text{if}(AllowDispl > Displ, \text{"OK"}, \text{"NG"}) = \text{"OK"}$$

Section 3
STAAD Pro Output Fixed
26’ x 10’ 3-Sided Culvert: HL93
0.5’-1’ Earth Cover Incl. BM & SF diagrams

```
****************************************************
*                                                  *
*           STAAD.Pro V8i SELECTseries5            *
*           Version  20.07.10.65                   *
*           Proprietary Program of                 *
*           Bentley Systems, Inc.                  *
*           Date=    APR  1, 2015                  *
*           Time=     9:50:47                      *
*                                                  *
*      USER ID:                                    *
****************************************************
```

```
     1. STAAD SPACE
INPUT FILE: 26x10-HL93-fixed.STD
     2. START JOB INFORMATION
     3. ENGINEER DATE 03/16/15
     4. ENGINEER NAME BK
     5. END JOB INFORMATION
     6. INPUT WIDTH 79
     7. UNIT FEET KIP
     8. JOINT COORDINATES
     9. 1 -13.415 0 0; 2 13.415 0 0; 3 -13.415 10.666 0; 4 0 10.666 0
    10. 5 13.415 10.666 0
    11. MEMBER INCIDENCES
    12. 1 1 3; 2 2 5; 3 3 4; 4 5 4
    13. DEFINE MATERIAL START
    14. ISOTROPIC CONCRETE5000
    15. E 580390
    16. POISSON 0.17
    17. DENSITY 0.15
    18. ALPHA 5.5E-006
    19. DAMP 0.05
    20. END DEFINE MATERIAL
    21. MEMBER PROPERTY AMERICAN
    22. 1 2 PRIS YD 0.83 ZD 1
    23. 3 4 PRIS YD 1.33 ZD 1
    24. CONSTANTS
    25. MATERIAL CONCRETE5000 ALL
    26. SUPPORTS
    27. 1 FIXED BUT MZ
    28. 2 FIXED BUT MZ
    29. MEMBER OFFSET
    30. 3 START 0.415 0 0
    31. 4 START -0.415 0 0
    32. 1 END 0 -0.666 0
    33. 2 END 0 -0.666 0
    34. DEFINE MOVING LOAD
    35. ***TRUCK
    36. TYPE 1 LOAD 1.13 4.522 4.522
    37. DIST 14 14
    38. ***TANDEM
```

```
 39. TYPE 2 LOAD 3.532 3.532
 40. DIST 4
 41. ***
 42. LOAD 1 LOADTYPE NONE  TITLE LOAD CASE 1- UNIFORM LOAD -COVER 1.0FT
 43. MEMBER LOAD
 44. 3 4 UNI GY -0.106
 45. SELFWEIGHT Y -1
 46. LOAD 2 LOADTYPE NONE  TITLE -EMAX
 47. MEMBER LOAD
 48. 2 TRAP GX -0.863 -0.163
 49. 1 TRAP GX 0.863 0.163
 50. LOAD 3 LOADTYPE NONE  TITLE -EMIN
 51. MEMBER LOAD
 52. 2 TRAP GX -0.432 -0.082
 53. 1 TRAP GX 0.432 0.082
 54. LOAD 4 LOADTYPE NONE  TITLE -AWL
 55. MEMBER LOAD
 56. 2 UNI GX -0.21
 57. 1 UNI GX 0.21
 58. LOAD 5 LOADTYPE NONE  TITLE -IPF-WATER INSIDE
 59. MEMBER LOAD
 60. 2 TRAP GX 0.624 0 0
 61. 1 TRAP GX -0.624 0 0
 62. LOAD 6 LOADTYPE NONE  TITLE LOAD CASE LANE
 63. MEMBER LOAD
 64. 3 4 UNI GY -0.064
 65. LOAD 10 LOADTYPE LIVE  TITLE LOAD CASE TRUCK
 66. LOAD GENERATION 12
 67. TYPE 1 -41.415 10.666 0 XINC 2
 68. LOAD 30 LOADTYPE LIVE  TITLE LOAD CASE TANDEM
**WARNING-A MOVING LOAD THAT WOULD HAVE BEEN APPLIED BEYOND THE X AND Z RANGES
          OF THE STRUCTURE HAS BEEN IGNORED. CASE=   11 WHEEL   1 OF   3
**WARNING-A MOVING LOAD THAT WOULD HAVE BEEN APPLIED BEYOND THE X AND Z RANGES
          OF THE STRUCTURE HAS BEEN IGNORED. CASE=   11 WHEEL   2 OF   3
**WARNING-A MOVING LOAD THAT WOULD HAVE BEEN APPLIED BEYOND THE X AND Z RANGES
          OF THE STRUCTURE HAS BEEN IGNORED. CASE=   12 WHEEL   1 OF   3
**WARNING-A MOVING LOAD THAT WOULD HAVE BEEN APPLIED BEYOND THE X AND Z RANGES
          OF THE STRUCTURE HAS BEEN IGNORED. CASE=   12 WHEEL   2 OF   3
**WARNING-A MOVING LOAD THAT WOULD HAVE BEEN APPLIED BEYOND THE X AND Z RANGES
          OF THE STRUCTURE HAS BEEN IGNORED. CASE=   13 WHEEL   1 OF   3
**WARNING-A MOVING LOAD THAT WOULD HAVE BEEN APPLIED BEYOND THE X AND Z RANGES
          OF THE STRUCTURE HAS BEEN IGNORED. CASE=   13 WHEEL   2 OF   3
**WARNING-A MOVING LOAD THAT WOULD HAVE BEEN APPLIED BEYOND THE X AND Z RANGES
          OF THE STRUCTURE HAS BEEN IGNORED. CASE=   14 WHEEL   1 OF   3
**WARNING-A MOVING LOAD THAT WOULD HAVE BEEN APPLIED BEYOND THE X AND Z RANGES
          OF THE STRUCTURE HAS BEEN IGNORED. CASE=   14 WHEEL   2 OF   3
**WARNING-A MOVING LOAD THAT WOULD HAVE BEEN APPLIED BEYOND THE X AND Z RANGES
          OF THE STRUCTURE HAS BEEN IGNORED. CASE=   15 WHEEL   1 OF   3
**WARNING-A MOVING LOAD THAT WOULD HAVE BEEN APPLIED BEYOND THE X AND Z RANGES
          OF THE STRUCTURE HAS BEEN IGNORED. CASE=   15 WHEEL   2 OF   3
*ADDITIONAL MOVING LOAD MESSAGES SUPPRESSED
*ADDITIONAL MOVING LOAD MESSAGES SUPPRESSED
 69. LOAD GENERATION 9
 70. TYPE 2 -17.415 10.666 0 XINC 2
 71. ***TRUCK
 72. LOAD COMB 100 COMBINATION LOAD CASE -MAX MOMENT OUTSIDE
```

```
 73. 11 1.75 6 1.75 1 1.35 2 1.35 4 1.75
 74. LOAD COMB 101 COMBINATION LOAD CASE
 75. 12 1.75 6 1.75 1 1.35 2 1.35 4 1.75
 76. LOAD COMB 102 COMBINATION LOAD CASE
 77. 13 1.75 6 1.75 1 1.35 2 1.35 4 1.75
 78. LOAD COMB 103 COMBINATION LOAD CASE
 79. 14 1.75 6 1.75 1 1.35 2 1.35 4 1.75
 80. LOAD COMB 104 COMBINATION LOAD CASE
 81. 15 1.75 6 1.75 1 1.35 2 1.35 4 1.75
 82. LOAD COMB 105 COMBINATION LOAD CASE
 83. 16 1.75 6 1.75 1 1.35 2 1.35 4 1.75
 84. LOAD COMB 106 COMBINATION LOAD CASE
 85. 17 1.75 6 1.75 1 1.35 2 1.35 4 1.75
 86. LOAD COMB 107 COMBINATION LOAD CASE
 87. 18 1.75 6 1.75 1 1.35 2 1.35 4 1.75
 88. LOAD COMB 108 COMBINATION LOAD CASE
 89. 19 1.75 6 1.75 1 1.35 2 1.35 4 1.75
 90. LOAD COMB 109 COMBINATION LOAD CASE
 91. 20 1.75 6 1.75 1 1.35 2 1.35 4 1.75
 92. LOAD COMB 110 COMBINATION LOAD CASE
 93. 21 1.75 6 1.75 1 1.35 2 1.35 4 1.75
 94. LOAD COMB 111 COMBINATION LOAD CASE
 95. 22 1.75 6 1.75 1 1.35 2 1.35 4 1.75
 96. ***
 97. LOAD COMB 200 COMBINATION LOAD CASE -MAX MOMENT INSIDE
 98. 11 1.75 6 1.75 1 1.35 2 0.5 5 1.0
 99. LOAD COMB 201 COMBINATION LOAD CASE
100. 12 1.75 6 1.75 1 1.35 2 0.5 5 1.0
101. LOAD COMB 202 COMBINATION LOAD CASE
102. 13 1.75 6 1.75 1 1.35 2 0.5 5 1.0
103. LOAD COMB 203 COMBINATION LOAD CASE
104. 14 1.75 6 1.75 1 1.35 2 0.5 5 1.0
105. LOAD COMB 204 COMBINATION LOAD CASE
106. 15 1.75 6 1.75 1 1.35 2 0.5 5 1.0
107. LOAD COMB 205 COMBINATION LOAD CASE
108. 16 1.75 6 1.75 1 1.35 2 0.5 5 1.0
109. LOAD COMB 206 COMBINATION LOAD CASE
110. 17 1.75 6 1.75 1 1.35 2 0.5 5 1.0
111. LOAD COMB 207 COMBINATION LOAD CASE
112. 18 1.75 6 1.75 1 1.35 2 0.5 5 1.0
113. LOAD COMB 208 COMBINATION LOAD CASE
114. 19 1.75 6 1.75 1 1.35 2 0.5 5 1.0
115. LOAD COMB 209 COMBINATION LOAD CASE
116. 20 1.75 6 1.75 1 1.35 2 0.5 5 1.0
117. LOAD COMB 210 COMBINATION LOAD CASE
118. 21 1.75 6 1.75 1 1.35 2 0.5 5 1.0
119. LOAD COMB 211 COMBINATION LOAD CASE
120. 22 1.75 6 1.75 1 1.35 2 0.5 5 1.0
121. ***
122. LOAD COMB 300 COMBINATION LOAD CASE -CRACK CONTROL-MAX OUTSIDE
123. 11 1.0 6 1.0 1 1.0 2 1.0 4 1.0
124. LOAD COMB 301 COMBINATION LOAD CASE
125. 12 1.0 6 1.0 1 1.0 2 1.0 4 1.0
126. LOAD COMB 302 COMBINATION LOAD CASE
127. 13 1.0 6 1.0 1 1.0 2 1.0 4 1.0
128. LOAD COMB 303 COMBINATION LOAD CASE
```

```
129. 14 1.0 6 1.0 1 1.0 2 1.0 4 1.0
130. LOAD COMB 304 COMBINATION LOAD CASE
131. 15 1.0 6 1.0 1 1.0 2 1.0 4 1.0
132. LOAD COMB 305 COMBINATION LOAD CASE
133. 16 1.0 6 1.0 1 1.0 2 1.0 4 1.0
134. LOAD COMB 306 COMBINATION LOAD CASE
135. 17 1.0 6 1.0 1 1.0 2 1.0 4 1.0
136. LOAD COMB 307 COMBINATION LOAD CASE
137. 18 1.0 6 1.0 1 1.0 2 1.0 4 1.0
138. LOAD COMB 308 COMBINATION LOAD CASE
139. 19 1.0 6 1.0 1 1.0 2 1.0 4 1.0
140. LOAD COMB 309 COMBINATION LOAD CASE
141. 20 1.0 6 1.0 1 1.0 2 1.0 4 1.0
142. LOAD COMB 310 COMBINATION LOAD CASE
143. 21 1.0 6 1.0 1 1.0 2 1.0 4 1.0
144. LOAD COMB 311 COMBINATION LOAD CASE
145. 22 1.0 6 1.0 1 1.0 2 1.0 4 1.0
146. ***
147. LOAD COMB 400 COMBINATION LOAD CASE -CRACK CONTROL-MAX INSIDE
148. 11 1.0 3 1.0 1 1.0 6 1.0 5 1.0
149. LOAD COMB 401 COMBINATION LOAD CASE
150. 12 1.0 3 1.0 1 1.0 6 1.0 5 1.0
151. LOAD COMB 402 COMBINATION LOAD CASE
152. 13 1.0 3 1.0 1 1.0 6 1.0 5 1.0
153. LOAD COMB 403 COMBINATION LOAD CASE
154. 14 1.0 3 1.0 1 1.0 6 1.0 5 1.0
155. LOAD COMB 404 COMBINATION LOAD CASE
156. 15 1.0 3 1.0 1 1.0 6 1.0 5 1.0
157. LOAD COMB 405 COMBINATION LOAD CASE
158. 16 1.0 3 1.0 1 1.0 6 1.0 5 1.0
159. LOAD COMB 406 COMBINATION LOAD CASE
160. 17 1.0 3 1.0 1 1.0 6 1.0 5 1.0
161. LOAD COMB 407 COMBINATION LOAD CASE
162. 18 1.0 3 1.0 1 1.0 6 1.0 5 1.0
163. LOAD COMB 408 COMBINATION LOAD CASE
164. 19 1.0 3 1.0 1 1.0 6 1.0 5 1.0
165. LOAD COMB 409 COMBINATION LOAD CASE
166. 20 1.0 3 1.0 1 1.0 6 1.0 5 1.0
167. LOAD COMB 410 COMBINATION LOAD CASE
168. 21 1.0 3 1.0 1 1.0 6 1.0 5 1.0
169. LOAD COMB 411 COMBINATION LOAD CASE
170. 22 1.0 3 1.0 1 1.0 6 1.0 5 1.0
171. ***
172. LOAD COMB 500 COMBINATION LOAD CASE -CHECK SUPPORT DISPL.
173. 11 1.0 6 1.0 1 1.0
174. LOAD COMB 501 COMBINATION LOAD CASE
175. 12 1.0 6 1.0 1 1.0
176. LOAD COMB 502 COMBINATION LOAD CASE
177. 13 1.0 6 1.0 1 1.0
178. LOAD COMB 503 COMBINATION LOAD CASE
179. 14 1.0 6 1.0 1 1.0
180. LOAD COMB 504 COMBINATION LOAD CASE
181. 15 1.0 6 1.0 1 1.0
182. LOAD COMB 505 COMBINATION LOAD CASE
183. 16 1.0 6 1.0 1 1.0
184. LOAD COMB 506 COMBINATION LOAD CASE
```

```
185. 17 1.0 6 1.0 1 1.0
186. LOAD COMB 507 COMBINATION LOAD CASE
187. 18 1.0 6 1.0 1 1.0
188. LOAD COMB 508 COMBINATION LOAD CASE
189. 19 1.0 6 1.0 1 1.0
190. LOAD COMB 509 COMBINATION LOAD CASE
191. 20 1.0 6 1.0 1 1.0
192. LOAD COMB 510 COMBINATION LOAD CASE
193. 21 1.0 6 1.0 1 1.0
194. LOAD COMB 511 COMBINATION LOAD CASE
195. 22 1.0 6 1.0 1 1.0
196. ***
197. LOAD COMB 600 COMBINATION LOAD CASE -CHECK DEFLEC.
198. 11 1.0 6 1.0 3 1.0
199. LOAD COMB 601 COMBINATION LOAD CASE
200. 12 1.0 6 1.0 3 1.0
201. LOAD COMB 602 COMBINATION LOAD CASE
202. 13 1.0 6 1.0 3 1.0
203. LOAD COMB 603 COMBINATION LOAD CASE
204. 14 1.0 6 1.0 3 1.0
205. LOAD COMB 604 COMBINATION LOAD CASE
206. 15 1.0 6 1.0 3 1.0
207. LOAD COMB 605 COMBINATION LOAD CASE
208. 16 1.0 6 1.0 3 1.0
209. LOAD COMB 606 COMBINATION LOAD CASE
210. 17 1.0 6 1.0 3 1.0
211. LOAD COMB 607 COMBINATION LOAD CASE
212. 18 1.0 6 1.0 3 1.0
213. LOAD COMB 608 COMBINATION LOAD CASE
214. 19 1.0 6 1.0 3 1.0
215. LOAD COMB 609 COMBINATION LOAD CASE
216. 20 1.0 6 1.0 3 1.0
217. LOAD COMB 610 COMBINATION LOAD CASE
218. 21 1.0 6 1.0 3 1.0
219. LOAD COMB 611 COMBINATION LOAD CASE
220. 22 1.0 6 1.0 3 1.0
221. LOAD COMB 700 COMBINATION LOAD CASE -LL1
222. 11 1.0 6 1.0
223. LOAD COMB 701 COMBINATION LOAD CASE
224. 12 1.0 6 1.0
225. LOAD COMB 702 COMBINATION LOAD CASE
226. 13 1.0 6 1.0
227. LOAD COMB 703 COMBINATION LOAD CASE
228. 14 1.0 6 1.0
229. LOAD COMB 704 COMBINATION LOAD CASE
230. 15 1.0 6 1.0
231. LOAD COMB 705 COMBINATION LOAD CASE
232. 16 1.0 6 1.0
233. LOAD COMB 706 COMBINATION LOAD CASE
234. 17 1.0 6 1.0
235. LOAD COMB 707 COMBINATION LOAD CASE
236. 18 1.0 6 1.0
237. LOAD COMB 708 COMBINATION LOAD CASE
238. 19 1.0 6 1.0
239. LOAD COMB 709 COMBINATION LOAD CASE
240. 20 1.0 6 1.0
```

```
241. LOAD COMB 710 COMBINATION LOAD CASE
242. 21 1.0 6 1.0
243. LOAD COMB 711 COMBINATION LOAD CASE
244. 22 1.0 6 1.0
245. ***
246. LOAD COMB 800 COMBINATION LOAD CASE -DL
247. 1 1.0 2 1.0 4 1.0
248. ***
249. ***TANDEM
250. LOAD COMB 1000 COMBINATION LOAD CASE -MAX MOMENT OUTSIDE
251. 31 1.75 6 1.75 1 1.35 2 1.35 4 1.75
252. LOAD COMB 1001 COMBINATION LOAD CASE
253. 32 1.75 6 1.75 1 1.35 2 1.35 4 1.75
254. LOAD COMB 1002 COMBINATION LOAD CASE
255. 33 1.75 6 1.75 1 1.35 2 1.35 4 1.75
256. LOAD COMB 1003 COMBINATION LOAD CASE
257. 34 1.75 6 1.75 1 1.35 2 1.35 4 1.75
258. LOAD COMB 1004 COMBINATION LOAD CASE
259. 35 1.75 6 1.75 1 1.35 2 1.35 4 1.75
260. LOAD COMB 1005 COMBINATION LOAD CASE
261. 36 1.75 6 1.75 1 1.35 2 1.35 4 1.75
262. LOAD COMB 1006 COMBINATION LOAD CASE
263. 37 1.75 6 1.75 1 1.35 2 1.35 4 1.75
264. LOAD COMB 1007 COMBINATION LOAD CASE
265. 38 1.75 6 1.75 1 1.35 2 1.35 4 1.75
266. LOAD COMB 1008 COMBINATION LOAD CASE
267. 39 1.75 6 1.75 1 1.35 2 1.35 4 1.75
268. LOAD COMB 2001 COMBINATION LOAD CASE
269. 32 1.75 6 1.75 1 1.35 2 0.5 5 1.0
270. LOAD COMB 2002 COMBINATION LOAD CASE
271. 33 1.75 6 1.75 1 1.35 2 0.5 5 1.0
272. LOAD COMB 2003 COMBINATION LOAD CASE
273. 34 1.75 6 1.75 1 1.35 2 0.5 5 1.0
274. LOAD COMB 2004 COMBINATION LOAD CASE
275. 35 1.75 6 1.75 1 1.35 2 0.5 5 1.0
276. LOAD COMB 2005 COMBINATION LOAD CASE
277. 36 1.75 6 1.75 1 1.35 2 0.5 5 1.0
278. LOAD COMB 2006 COMBINATION LOAD CASE
279. 37 1.75 6 1.75 1 1.35 2 0.5 5 1.0
280. LOAD COMB 2007 COMBINATION LOAD CASE
281. 38 1.75 6 1.75 1 1.35 2 0.5 5 1.0
282. LOAD COMB 2008 COMBINATION LOAD CASE
283. 39 1.75 6 1.75 1 1.35 2 0.5 5 1.0
284. LOAD COMB 3000 COMBINATION LOAD CASE -CRACK CONTROL-MAX OUTSIDE
285. 31 1.0 6 1.0 1 1.0 2 1.0 4 1.0
286. LOAD COMB 3001 COMBINATION LOAD CASE
287. 32 1.0 6 1.0 1 1.0 2 1.0 4 1.0
288. LOAD COMB 3002 COMBINATION LOAD CASE
289. 33 1.0 6 1.0 1 1.0 2 1.0 4 1.0
290. LOAD COMB 3003 COMBINATION LOAD CASE
291. 34 1.0 6 1.0 1 1.0 2 1.0 4 1.0
292. LOAD COMB 3004 COMBINATION LOAD CASE
293. 35 1.0 6 1.0 1 1.0 2 1.0 4 1.0
294. LOAD COMB 3005 COMBINATION LOAD CASE
295. 36 1.0 6 1.0 1 1.0 2 1.0 4 1.0
296. LOAD COMB 3006 COMBINATION LOAD CASE
```

```
297. 37 1.0 6 1.0 1 1.0 2 1.0 4 1.0
298. LOAD COMB 3007 COMBINATION LOAD CASE
299. 38 1.0 6 1.0 1 1.0 2 1.0 4 1.0
300. LOAD COMB 3008 COMBINATION LOAD CASE
301. 39 1.0 6 1.0 1 1.0 2 1.0 4 1.0
302. LOAD COMB 4000 COMBINATION LOAD CASE -CRACK CONTROL-MAX INSIDE
303. 31 1.0 3 1.0 1 1.0 6 1.0 5 1.0
304. LOAD COMB 4001 COMBINATION LOAD CASE
305. 32 1.0 3 1.0 1 1.0 6 1.0 5 1.0
306. LOAD COMB 4002 COMBINATION LOAD CASE
307. 33 1.0 3 1.0 1 1.0 6 1.0 5 1.0
308. LOAD COMB 4003 COMBINATION LOAD CASE
309. 34 1.0 3 1.0 1 1.0 6 1.0 5 1.0
310. LOAD COMB 4004 COMBINATION LOAD CASE
311. 35 1.0 3 1.0 1 1.0 6 1.0 5 1.0
312. LOAD COMB 4005 COMBINATION LOAD CASE
313. 36 1.0 3 1.0 1 1.0 6 1.0 5 1.0
314. LOAD COMB 4006 COMBINATION LOAD CASE
315. 37 1.0 3 1.0 1 1.0 6 1.0 5 1.0
316. LOAD COMB 4007 COMBINATION LOAD CASE
317. 38 1.0 3 1.0 1 1.0 6 1.0 5 1.0
318. LOAD COMB 4008 COMBINATION LOAD CASE
319. 39 1.0 3 1.0 1 1.0 6 1.0 5 1.0
320. LOAD COMB 5000 COMBINATION LOAD CASE -CHECK SUPPORT DISPL.
321. 31 1.0 6 1.0 1 1.0
322. LOAD COMB 5001 COMBINATION LOAD CASE
323. 32 1.0 6 1.0 1 1.0
324. LOAD COMB 5002 COMBINATION LOAD CASE
325. 33 1.0 6 1.0 1 1.0
326. LOAD COMB 5003 COMBINATION LOAD CASE
327. 34 1.0 6 1.0 1 1.0
328. LOAD COMB 5004 COMBINATION LOAD CASE
329. 35 1.0 6 1.0 1 1.0
330. LOAD COMB 5005 COMBINATION LOAD CASE
331. 36 1.0 6 1.0 1 1.0
332. LOAD COMB 5006 COMBINATION LOAD CASE
333. 37 1.0 6 1.0 1 1.0
334. LOAD COMB 5007 COMBINATION LOAD CASE
335. 38 1.0 6 1.0 1 1.0
336. LOAD COMB 5008 COMBINATION LOAD CASE
337. 39 1.0 6 1.0 1 1.0
338. LOAD COMB 6000 COMBINATION LOAD CASE -CHECK DEFLEC.
339. 31 1.0 6 1.0 3 1.0
340. LOAD COMB 6001 COMBINATION LOAD CASE
341. 32 1.0 6 1.0 3 1.0
342. LOAD COMB 6002 COMBINATION LOAD CASE
343. 33 1.0 6 1.0 3 1.0
344. LOAD COMB 6003 COMBINATION LOAD CASE
345. 34 1.0 6 1.0 3 1.0
346. LOAD COMB 6004 COMBINATION LOAD CASE
347. 35 1.0 6 1.0 3 1.0
348. LOAD COMB 6005 COMBINATION LOAD CASE
349. 36 1.0 6 1.0 3 1.0
350. LOAD COMB 6006 COMBINATION LOAD CASE
351. 37 1.0 6 1.0 3 1.0
352. LOAD COMB 6007 COMBINATION LOAD CASE
```

```
353. 38 1.0 6 1.0 3 1.0
354. LOAD COMB 6008 COMBINATION LOAD CASE
355. 39 1.0 6 1.0 3 1.0
356. ***
357. LOAD COMB 7000 COMBINATION LOAD CASE -LL2
358. 31 1.0 6 1.0
359. LOAD COMB 7001 COMBINATION LOAD CASE
360. 32 1.0 6 1.0
361. LOAD COMB 7002 COMBINATION LOAD CASE
362. 33 1.0 6 1.0
363. LOAD COMB 7003 COMBINATION LOAD CASE
364. 34 1.0 6 1.0
365. LOAD COMB 7004 COMBINATION LOAD CASE
366. 35 1.0 6 1.0
367. LOAD COMB 7005 COMBINATION LOAD CASE
368. 36 1.0 6 1.0
369. LOAD COMB 7006 COMBINATION LOAD CASE
370. 37 1.0 6 1.0
371. LOAD COMB 7007 COMBINATION LOAD CASE
372. 38 1.0 6 1.0
373. LOAD COMB 7008 COMBINATION LOAD CASE
374. 39 1.0 6 1.0
375. ***
376. PERFORM ANALYSIS
```

```
        P R O B L E M   S T A T I S T I C S
        -----------------------------------

  NUMBER OF JOINTS          5  NUMBER OF MEMBERS       4
  NUMBER OF PLATES          0  NUMBER OF SOLIDS        0
  NUMBER OF SURFACES        0  NUMBER OF SUPPORTS      2


       SOLVER USED IS THE OUT-OF-CORE BASIC SOLVER

  ORIGINAL/FINAL BAND-WIDTH=     3/     3/     19 DOF
TOTAL      PRIMARY LOAD CASES =    29, TOTAL DEGREES OF FREEDOM =      20
TOTAL LOAD COMBINATION  CASES =   147  SO FAR.
  SIZE OF STIFFNESS MATRIX =        1 DOUBLE  KILO-WORDS
  REQRD/AVAIL. DISK SPACE  =     12.0/      0.0 MB
```

```
377. LOAD LIST 1 TO 6 11 TO 22 31 TO 39
378. PRINT SUPPORT REACTION ALL
```

SUPPORT REACTIONS -UNIT KIP FEET STRUCTURE TYPE = SPACE

JOINT	LOAD	FORCE-X	FORCE-Y	FORCE-Z	MOM-X	MOM-Y	MOM Z
1	1	0.91	5.22	0.00	0.00	0.00	0.00
	2	-2.92	0.00	0.00	0.00	0.00	0.00
	3	-1.46	0.00	0.00	0.00	0.00	0.00
	4	-0.96	0.00	0.00	0.00	0.00	0.00
	5	1.94	0.00	0.00	0.00	0.00	0.00
	6	0.19	0.83	0.00	0.00	0.00	0.00
	11	0.05	4.45	0.00	0.00	0.00	0.00
	12	0.25	4.11	0.00	0.00	0.00	0.00
	13	0.42	3.78	0.00	0.00	0.00	0.00
	14	0.55	3.44	0.00	0.00	0.00	0.00
	15	0.65	3.10	0.00	0.00	0.00	0.00
	16	0.72	2.77	0.00	0.00	0.00	0.00
	17	0.75	2.43	0.00	0.00	0.00	0.00
	18	0.80	6.68	0.00	0.00	0.00	0.00
	19	0.99	6.01	0.00	0.00	0.00	0.00
	20	1.10	5.34	0.00	0.00	0.00	0.00
	21	1.15	4.66	0.00	0.00	0.00	0.00
	22	1.13	3.99	0.00	0.00	0.00	0.00
	31	0.04	3.48	0.00	0.00	0.00	0.00
	32	0.19	3.21	0.00	0.00	0.00	0.00
	33	0.36	6.43	0.00	0.00	0.00	0.00
	34	0.62	5.90	0.00	0.00	0.00	0.00
	35	0.84	5.38	0.00	0.00	0.00	0.00
	36	0.99	4.85	0.00	0.00	0.00	0.00
	37	1.10	4.32	0.00	0.00	0.00	0.00
	38	1.15	3.90	0.00	0.00	0.00	0.00
	39	1.17	3.38	0.00	0.00	0.00	0.00
2	1	-0.91	5.22	0.00	0.00	0.00	0.00
	2	2.92	0.00	0.00	0.00	0.00	0.00
	3	1.46	0.00	0.00	0.00	0.00	0.00
	4	0.96	0.00	0.00	0.00	0.00	0.00
	5	-1.94	0.00	0.00	0.00	0.00	0.00
	6	-0.19	0.83	0.00	0.00	0.00	0.00
	11	-0.05	0.07	0.00	0.00	0.00	0.00
	12	-0.25	0.41	0.00	0.00	0.00	0.00
	13	-0.42	0.74	0.00	0.00	0.00	0.00
	14	-0.55	1.08	0.00	0.00	0.00	0.00
	15	-0.65	1.42	0.00	0.00	0.00	0.00
	16	-0.72	1.76	0.00	0.00	0.00	0.00
	17	-0.75	2.09	0.00	0.00	0.00	0.00
	18	-0.80	2.36	0.00	0.00	0.00	0.00
	19	-0.99	3.03	0.00	0.00	0.00	0.00
	20	-1.10	3.71	0.00	0.00	0.00	0.00
	21	-1.15	4.38	0.00	0.00	0.00	0.00
	22	-1.13	5.06	0.00	0.00	0.00	0.00
	31	-0.04	0.05	0.00	0.00	0.00	0.00

SUPPORT REACTIONS -UNIT KIP FEET STRUCTURE TYPE = SPACE

JOINT	LOAD	FORCE-X	FORCE-Y	FORCE-Z	MOM-X	MOM-Y	MOM Z
	32	-0.19	0.32	0.00	0.00	0.00	0.00
	33	-0.36	0.64	0.00	0.00	0.00	0.00
	34	-0.62	1.16	0.00	0.00	0.00	0.00
	35	-0.84	1.69	0.00	0.00	0.00	0.00
	36	-0.99	2.22	0.00	0.00	0.00	0.00
	37	-1.10	2.74	0.00	0.00	0.00	0.00
	38	-1.15	3.16	0.00	0.00	0.00	0.00
	39	-1.17	3.69	0.00	0.00	0.00	0.00

********** END OF LATEST ANALYSIS RESULT **********

379. PRINT FORCE ENVELOPE NSECTION 2 ALL

MEMBER FORCE ENVELOPE

ALL UNITS ARE KIP FEET

MEMB	DISTANCE		FY	LD	MZ	LD	FZ	LD	MY	LD
1	0.00	MAX	2.92	2	0.00	39	0.00	39	0.00	39
		MIN	-1.94	5	0.00	39	0.00	39	0.00	39
	0.83	MAX	2.23	2	1.41	5	0.00	39	0.00	39
		MIN	-1.44	5	-2.14	2	0.00	39	0.00	39
	1.67	MAX	1.58	2	2.41	5	0.00	39	0.00	39
		MIN	-1.17	39	-3.72	2	0.00	39	0.00	39
	2.50	MAX	0.98	2	3.06	5	0.00	39	0.00	39
		MIN	-1.17	39	-4.79	2	0.00	39	0.00	39
	3.33	MAX	0.43	2	3.89	39	0.00	39	0.00	39
		MIN	-1.17	39	-5.37	2	0.00	39	0.00	39
	4.17	MAX	0.12	5	4.86	39	0.00	39	0.00	39
		MIN	-1.17	39	-5.52	2	0.00	39	0.00	39
	5.00	MAX	0.40	5	5.83	39	0.00	39	0.00	39
		MIN	-1.17	39	-5.27	2	0.00	39	0.00	39
	5.83	MAX	0.64	5	6.80	39	0.00	39	0.00	39
		MIN	-1.17	39	-4.67	2	0.00	39	0.00	39
	6.67	MAX	0.83	5	7.77	39	0.00	39	0.00	39
		MIN	-1.28	2	-3.75	2	0.00	39	0.00	39
	7.50	MAX	0.99	5	8.74	39	0.00	39	0.00	39
		MIN	-1.58	2	-2.55	2	0.00	39	0.00	39
	8.33	MAX	1.09	5	9.71	39	0.00	39	0.00	39
		MIN	-1.84	2	-1.12	2	0.00	39	0.00	39
	9.17	MAX	1.16	5	10.69	39	0.00	39	0.00	39
		MIN	-2.05	2	-0.42	5	0.00	39	0.00	39
	10.00	MAX	1.18	5	11.66	39	0.00	39	0.00	39
		MIN	-2.21	2	-1.40	5	0.00	39	0.00	39

MAX/MIN FORCE VALUES FOR MEMB 1, AMONGST ALL SECT LOCATIONS

	FY/ FZ	DIST DIST	LD LD	MZ/ MY	DIST DIST	LD LD	FX	DIST	LD
MAX.	2.92	0.00	2	11.66	10.00	39			
	0.00	0.00	1	0.00	0.00	1	6.68 C	0.00	18
MIN.	-2.21	10.00	2	-5.52	4.17	2			
	0.00	10.00	39	0.00	10.00	39	0.00	10.00	5

2	0.00	MAX	1.94	5	0.00	39	0.00	39	0.00	39
		MIN	-2.92	2	0.00	39	0.00	39	0.00	39
	0.83	MAX	1.44	5	2.14	2	0.00	39	0.00	39
		MIN	-2.23	2	-1.41	5	0.00	39	0.00	39

1.67	MAX	1.17	39	3.72	2	0.00	39	0.00	39
	MIN	-1.58	2	-2.41	5	0.00	39	0.00	39
2.50	MAX	1.17	39	4.79	2	0.00	39	0.00	39
	MIN	-0.98	2	-3.06	5	0.00	39	0.00	39
3.33	MAX	1.17	39	5.37	2	0.00	39	0.00	39
	MIN	-0.43	2	-3.89	39	0.00	39	0.00	39
4.17	MAX	1.17	39	5.52	2	0.00	39	0.00	39
	MIN	-0.12	5	-4.86	39	0.00	39	0.00	39
5.00	MAX	1.17	39	5.27	2	0.00	39	0.00	39
	MIN	-0.40	5	-5.83	39	0.00	39	0.00	39
5.83	MAX	1.17	39	4.67	2	0.00	39	0.00	39
	MIN	-0.64	5	-6.80	39	0.00	39	0.00	39
6.67	MAX	1.28	2	3.75	2	0.00	39	0.00	39
	MIN	-0.83	5	-7.77	39	0.00	39	0.00	39
7.50	MAX	1.58	2	2.55	2	0.00	39	0.00	39
	MIN	-0.99	5	-8.74	39	0.00	39	0.00	39
8.33	MAX	1.84	2	1.12	2	0.00	39	0.00	39
	MIN	-1.09	5	-9.71	39	0.00	39	0.00	39
9.17	MAX	2.05	2	0.42	5	0.00	39	0.00	39
	MIN	-1.16	5	-10.69	39	0.00	39	0.00	39
10.00	MAX	2.21	2	1.40	5	0.00	39	0.00	39
	MIN	-1.18	5	-11.66	39	0.00	39	0.00	39

MAX/MIN FORCE VALUES FOR MEMB 2, AMONGST ALL SECT LOCATIONS

	FY/ FZ	DIST DIST	LD LD	MZ/ MY	DIST DIST	LD LD	FX	DIST	LD
MAX.	2.21	10.00	2	5.52	4.17	2			
	0.00	0.00	1	0.00	0.00	1	5.22 C	0.00	1
MIN.	-2.92	0.00	2	-11.66	10.00	39			
	0.00	10.00	39	0.00	10.00	39	0.00	10.00	5

3	0.00	MAX	6.68	18	11.03	39	0.00	39	0.00	39
		MIN	0.00	5	-2.19	5	0.00	39	0.00	39
	1.08	MAX	6.01	19	7.37	39	0.00	39	0.00	39
		MIN	-0.07	11	-3.52	12	0.00	39	0.00	39
	2.17	MAX	5.38	35	3.75	2	0.00	39	0.00	39
		MIN	-0.41	12	-7.99	34	0.00	39	0.00	39
	3.25	MAX	5.38	35	3.75	2	0.00	39	0.00	39
		MIN	-0.41	12	-10.79	35	0.00	39	0.00	39
	4.33	MAX	4.85	36	3.75	2	0.00	39	0.00	39
		MIN	-0.74	13	-15.43	35	0.00	39	0.00	39
	5.42	MAX	4.85	36	3.75	2	0.00	39	0.00	39
		MIN	-0.74	13	-17.68	36	0.00	39	0.00	39
	6.50	MAX	4.32	37	3.75	2	0.00	39	0.00	39
		MIN	-1.16	34	-21.16	36	0.00	39	0.00	39
	7.58	MAX	4.32	37	3.75	2	0.00	39	0.00	39
		MIN	-1.16	34	-22.85	37	0.00	39	0.00	39
	8.67	MAX	3.90	38	3.75	2	0.00	39	0.00	39
		MIN	-1.69	35	-25.17	37	0.00	39	0.00	39
	9.75	MAX	3.90	38	3.75	2	0.00	39	0.00	39
		MIN	-1.69	35	-27.37	38	0.00	39	0.00	39

10.83	MAX	3.38	39	3.75	2	0.00	39	0.00	39
	MIN	-2.22	36	-28.66	38	0.00	39	0.00	39
11.92	MAX	3.38	39	3.75	2	0.00	39	0.00	39
	MIN	-2.22	36	-29.22	39	0.00	39	0.00	39
13.00	MAX	2.16	18	3.75	2	0.00	39	0.00	39
	MIN	-2.74	37	-29.47	38	0.00	39	0.00	39

MAX/MIN FORCE VALUES FOR MEMB 3, AMONGST ALL SECT LOCATIONS

	FY/ FZ	DIST DIST	LD LD	MZ/ MY	DIST DIST	LD LD	FX	DIST	LD
MAX.	6.68	0.00	18	11.03	0.00	39			
	0.00	0.00	1	0.00	0.00	1	2.21 C	0.00	2
MIN.	-2.74	13.00	37	-29.47	13.00	38			
	0.00	13.00	39	0.00	13.00	39	1.18 T	13.00	5

4	0.00	MAX	5.06	22	11.01	38	0.00	39	0.00	39
		MIN	0.00	5	-2.19	5	0.00	39	0.00	39
	1.08	MAX	5.06	22	7.61	37	0.00	39	0.00	39
		MIN	0.00	5	-2.19	5	0.00	39	0.00	39
	2.17	MAX	5.06	22	4.88	36	0.00	39	0.00	39
		MIN	0.00	5	-2.19	5	0.00	39	0.00	39
	3.25	MAX	5.06	22	3.75	2	0.00	39	0.00	39
		MIN	0.00	5	-6.48	22	0.00	39	0.00	39
	4.33	MAX	5.06	22	3.75	2	0.00	39	0.00	39
		MIN	0.00	5	-11.96	22	0.00	39	0.00	39
	5.42	MAX	4.38	21	3.75	2	0.00	39	0.00	39
		MIN	0.00	5	-14.78	22	0.00	39	0.00	39
	6.50	MAX	4.38	21	3.75	2	0.00	39	0.00	39
		MIN	0.00	5	-18.04	21	0.00	39	0.00	39
	7.58	MAX	3.71	20	3.75	2	0.00	39	0.00	39
		MIN	-0.14	21	-19.38	21	0.00	39	0.00	39
	8.67	MAX	3.71	20	3.75	2	0.00	39	0.00	39
		MIN	-0.14	21	-21.92	20	0.00	39	0.00	39
	9.75	MAX	3.69	39	3.75	2	0.00	39	0.00	39
		MIN	-0.81	20	-25.03	39	0.00	39	0.00	39
	10.83	MAX	3.16	38	3.75	2	0.00	39	0.00	39
		MIN	-1.49	19	-29.02	39	0.00	39	0.00	39
	11.92	MAX	3.16	38	3.75	2	0.00	39	0.00	39
		MIN	-1.49	19	-29.18	39	0.00	39	0.00	39
	13.00	MAX	2.74	37	3.75	2	0.00	39	0.00	39
		MIN	-2.16	18	-29.47	38	0.00	39	0.00	39

MAX/MIN FORCE VALUES FOR MEMB 4, AMONGST ALL SECT LOCATIONS

FY/ FZ	DIST DIST	LD LD	MZ/ MY	DIST DIST	LD LD	FX	DIST	LD

MAX.	5.06	0.00	22	11.01	0.00	38			
	0.00	0.00	1	0.00	0.00	1	2.21 C	0.00	2
MIN.	-2.16	13.00	18	-29.47	13.00	38			
	0.00	13.00	39	0.00	13.00	39	1.18 T	13.00	5

********** END OF FORCE ENVELOPE FROM INTERNAL STORAGE **********

380. LOAD LIST 300 TO 311 400 TO 411 3000 TO 3008 4000 TO 4008
381. PRINT SUPPORT REACTION ALL

SUPPORT REACTIONS -UNIT KIP FEET STRUCTURE TYPE = SPACE

JOINT	LOAD	FORCE-X	FORCE-Y	FORCE-Z	MOM-X	MOM-Y	MOM Z
1	300	-2.73	10.50	0.00	0.00	0.00	0.00
	301	-2.52	10.16	0.00	0.00	0.00	0.00
	302	-2.36	9.83	0.00	0.00	0.00	0.00
	303	-2.22	9.49	0.00	0.00	0.00	0.00
	304	-2.12	9.15	0.00	0.00	0.00	0.00
	305	-2.05	8.82	0.00	0.00	0.00	0.00
	306	-2.02	8.48	0.00	0.00	0.00	0.00
	307	-1.97	12.73	0.00	0.00	0.00	0.00
	308	-1.79	12.06	0.00	0.00	0.00	0.00
	309	-1.67	11.38	0.00	0.00	0.00	0.00
	310	-1.62	10.71	0.00	0.00	0.00	0.00
	311	-1.64	10.04	0.00	0.00	0.00	0.00
	400	1.63	10.50	0.00	0.00	0.00	0.00
	401	1.83	10.16	0.00	0.00	0.00	0.00
	402	2.00	9.83	0.00	0.00	0.00	0.00
	403	2.14	9.49	0.00	0.00	0.00	0.00
	404	2.24	9.15	0.00	0.00	0.00	0.00
	405	2.30	8.82	0.00	0.00	0.00	0.00
	406	2.34	8.48	0.00	0.00	0.00	0.00
	407	2.39	12.73	0.00	0.00	0.00	0.00
	408	2.57	12.06	0.00	0.00	0.00	0.00
	409	2.69	11.38	0.00	0.00	0.00	0.00
	410	2.73	10.71	0.00	0.00	0.00	0.00
	411	2.71	10.04	0.00	0.00	0.00	0.00
	3000	-2.74	9.53	0.00	0.00	0.00	0.00
	3001	-2.58	9.26	0.00	0.00	0.00	0.00
	3002	-2.41	12.48	0.00	0.00	0.00	0.00
	3003	-2.15	11.95	0.00	0.00	0.00	0.00
	3004	-1.94	11.42	0.00	0.00	0.00	0.00
	3005	-1.78	10.90	0.00	0.00	0.00	0.00
	3006	-1.67	10.37	0.00	0.00	0.00	0.00
	3007	-1.62	9.95	0.00	0.00	0.00	0.00
	3008	-1.61	9.43	0.00	0.00	0.00	0.00
	4000	1.62	9.53	0.00	0.00	0.00	0.00
	4001	1.78	9.26	0.00	0.00	0.00	0.00
	4002	1.94	12.48	0.00	0.00	0.00	0.00
	4003	2.21	11.95	0.00	0.00	0.00	0.00
	4004	2.42	11.42	0.00	0.00	0.00	0.00
	4005	2.58	10.90	0.00	0.00	0.00	0.00
	4006	2.68	10.37	0.00	0.00	0.00	0.00
	4007	2.74	9.95	0.00	0.00	0.00	0.00
	4008	2.75	9.43	0.00	0.00	0.00	0.00
2	300	2.73	6.12	0.00	0.00	0.00	0.00
	301	2.52	6.46	0.00	0.00	0.00	0.00
	302	2.36	6.79	0.00	0.00	0.00	0.00
	303	2.22	7.13	0.00	0.00	0.00	0.00

SUPPORT REACTIONS -UNIT KIP FEET STRUCTURE TYPE = SPACE

JOINT	LOAD	FORCE-X	FORCE-Y	FORCE-Z	MOM-X	MOM-Y	MOM Z
	304	2.12	7.47	0.00	0.00	0.00	0.00
	305	2.05	7.80	0.00	0.00	0.00	0.00
	306	2.02	8.14	0.00	0.00	0.00	0.00
	307	1.97	8.41	0.00	0.00	0.00	0.00
	308	1.79	9.08	0.00	0.00	0.00	0.00
	309	1.67	9.76	0.00	0.00	0.00	0.00
	310	1.62	10.43	0.00	0.00	0.00	0.00
	311	1.64	11.10	0.00	0.00	0.00	0.00
	400	-1.63	6.12	0.00	0.00	0.00	0.00
	401	-1.83	6.46	0.00	0.00	0.00	0.00
	402	-2.00	6.79	0.00	0.00	0.00	0.00
	403	-2.14	7.13	0.00	0.00	0.00	0.00
	404	-2.24	7.47	0.00	0.00	0.00	0.00
	405	-2.30	7.80	0.00	0.00	0.00	0.00
	406	-2.34	8.14	0.00	0.00	0.00	0.00
	407	-2.39	8.41	0.00	0.00	0.00	0.00
	408	-2.57	9.08	0.00	0.00	0.00	0.00
	409	-2.69	9.76	0.00	0.00	0.00	0.00
	410	-2.73	10.43	0.00	0.00	0.00	0.00
	411	-2.71	11.10	0.00	0.00	0.00	0.00
	3000	2.74	6.10	0.00	0.00	0.00	0.00
	3001	2.58	6.37	0.00	0.00	0.00	0.00
	3002	2.41	6.68	0.00	0.00	0.00	0.00
	3003	2.15	7.21	0.00	0.00	0.00	0.00
	3004	1.94	7.74	0.00	0.00	0.00	0.00
	3005	1.78	8.26	0.00	0.00	0.00	0.00
	3006	1.67	8.79	0.00	0.00	0.00	0.00
	3007	1.62	9.21	0.00	0.00	0.00	0.00
	3008	1.61	9.73	0.00	0.00	0.00	0.00
	4000	-1.62	6.10	0.00	0.00	0.00	0.00
	4001	-1.78	6.37	0.00	0.00	0.00	0.00
	4002	-1.94	6.68	0.00	0.00	0.00	0.00
	4003	-2.21	7.21	0.00	0.00	0.00	0.00
	4004	-2.42	7.74	0.00	0.00	0.00	0.00
	4005	-2.58	8.26	0.00	0.00	0.00	0.00
	4006	-2.68	8.79	0.00	0.00	0.00	0.00
	4007	-2.74	9.21	0.00	0.00	0.00	0.00
	4008	-2.75	9.73	0.00	0.00	0.00	0.00

********** END OF LATEST ANALYSIS RESULT **********

```
382. ***LL
383. LOAD LIST 700 TO 711 7000 TO 7008
384. PRINT SUPPORT REACTION ALL
```

SUPPORT REACTIONS -UNIT KIP FEET STRUCTURE TYPE = SPACE

JOINT	LOAD	FORCE-X	FORCE-Y	FORCE-Z	MOM-X	MOM-Y	MOM Z
1	700	0.24	5.28	0.00	0.00	0.00	0.00
	701	0.44	4.95	0.00	0.00	0.00	0.00
	702	0.61	4.61	0.00	0.00	0.00	0.00
	703	0.74	4.27	0.00	0.00	0.00	0.00
	704	0.84	3.94	0.00	0.00	0.00	0.00
	705	0.91	3.60	0.00	0.00	0.00	0.00
	706	0.95	3.26	0.00	0.00	0.00	0.00
	707	1.00	7.52	0.00	0.00	0.00	0.00
	708	1.18	6.84	0.00	0.00	0.00	0.00
	709	1.29	6.17	0.00	0.00	0.00	0.00
	710	1.34	5.49	0.00	0.00	0.00	0.00
	711	1.32	4.82	0.00	0.00	0.00	0.00
	7000	0.23	4.31	0.00	0.00	0.00	0.00
	7001	0.39	4.05	0.00	0.00	0.00	0.00
	7002	0.55	7.26	0.00	0.00	0.00	0.00
	7003	0.82	6.73	0.00	0.00	0.00	0.00
	7004	1.03	6.21	0.00	0.00	0.00	0.00
	7005	1.19	5.68	0.00	0.00	0.00	0.00
	7006	1.29	5.15	0.00	0.00	0.00	0.00
	7007	1.35	4.74	0.00	0.00	0.00	0.00
	7008	1.36	4.21	0.00	0.00	0.00	0.00
2	700	-0.24	0.90	0.00	0.00	0.00	0.00
	701	-0.44	1.24	0.00	0.00	0.00	0.00
	702	-0.61	1.58	0.00	0.00	0.00	0.00
	703	-0.74	1.91	0.00	0.00	0.00	0.00
	704	-0.84	2.25	0.00	0.00	0.00	0.00
	705	-0.91	2.59	0.00	0.00	0.00	0.00
	706	-0.95	2.92	0.00	0.00	0.00	0.00
	707	-1.00	3.19	0.00	0.00	0.00	0.00
	708	-1.18	3.87	0.00	0.00	0.00	0.00
	709	-1.29	4.54	0.00	0.00	0.00	0.00
	710	-1.34	5.21	0.00	0.00	0.00	0.00
	711	-1.32	5.89	0.00	0.00	0.00	0.00
	7000	-0.23	0.89	0.00	0.00	0.00	0.00
	7001	-0.39	1.15	0.00	0.00	0.00	0.00
	7002	-0.55	1.47	0.00	0.00	0.00	0.00
	7003	-0.82	1.99	0.00	0.00	0.00	0.00
	7004	-1.03	2.52	0.00	0.00	0.00	0.00
	7005	-1.19	3.05	0.00	0.00	0.00	0.00
	7006	-1.29	3.57	0.00	0.00	0.00	0.00
	7007	-1.35	3.99	0.00	0.00	0.00	0.00
	7008	-1.36	4.52	0.00	0.00	0.00	0.00

********** END OF LATEST ANALYSIS RESULT **********

```
385. ***DL
386. LOAD LIST 800
387. PRINT SUPPORT REACTION ALL
```

SUPPORT REACTIONS -UNIT KIP FEET STRUCTURE TYPE = SPACE

JOINT	LOAD	FORCE-X	FORCE-Y	FORCE-Z	MOM-X	MOM-Y	MOM Z
1	800	-2.96	5.22	0.00	0.00	0.00	0.00
2	800	2.96	5.22	0.00	0.00	0.00	0.00

********** END OF LATEST ANALYSIS RESULT **********

```
388. *** BEAM DISPLACEMENTS AT CL FROM 1.0LL
389. LOAD LIST 600 TO 611 6000 TO 6008
390. PRINT JOINT DISPLACEMENTS LIST 4
```

JOINT DISPLACEMENT (INCH RADIANS) STRUCTURE TYPE = SPACE

JOINT	LOAD	X-TRANS	Y-TRANS	Z-TRANS	X-ROTAN	Y-ROTAN	Z-ROTAN
4	600	0.00391	-0.01360	0.00000	0.00000	0.00000	0.00002
	601	0.02007	-0.03555	0.00000	0.00000	0.00000	0.00011
	602	0.02780	-0.05874	0.00000	0.00000	0.00000	0.00018
	603	0.02866	-0.08121	0.00000	0.00000	0.00000	0.00022
	604	0.02419	-0.10098	0.00000	0.00000	0.00000	0.00023
	605	0.01597	-0.11609	0.00000	0.00000	0.00000	0.00019
	606	0.00555	-0.12459	0.00000	0.00000	0.00000	0.00008
	607	0.00296	-0.13058	0.00000	0.00000	0.00000	0.00001
	608	0.00824	-0.14736	0.00000	0.00000	0.00000	-0.00004
	609	0.00665	-0.15794	0.00000	0.00000	0.00000	-0.00004
	610	0.00130	-0.16233	0.00000	0.00000	0.00000	-0.00001
	611	-0.00471	-0.16052	0.00000	0.00000	0.00000	0.00003
	6000	0.00305	-0.01253	0.00000	0.00000	0.00000	0.00002
	6001	0.01567	-0.02967	0.00000	0.00000	0.00000	0.00008
	6002	0.02477	-0.05160	0.00000	0.00000	0.00000	0.00015
	6003	0.03806	-0.08629	0.00000	0.00000	0.00000	0.00026
	6004	0.04061	-0.11985	0.00000	0.00000	0.00000	0.00032
	6005	0.03486	-0.14920	0.00000	0.00000	0.00000	0.00032
	6006	0.02323	-0.17128	0.00000	0.00000	0.00000	0.00024
	6007	0.01173	-0.18396	0.00000	0.00000	0.00000	0.00013
	6008	-0.00490	-0.18656	0.00000	0.00000	0.00000	-0.00005

********** END OF LATEST ANALYSIS RESULT **********

```
391. *** SUPPORT DISPLACEMENTS FROM 1.0DL+1.0LL
392. LOAD LIST 500 TO 511 5000 TO 5008
393. PRINT JOINT DISPLACEMENTS LIST 2
```

JOINT DISPLACEMENT (INCH RADIANS) STRUCTURE TYPE = SPACE

JOINT	LOAD	X-TRANS	Y-TRANS	Z-TRANS	X-ROTAN	Y-ROTAN	Z-ROTAN
2	500	0.00000	0.00000	0.00000	0.00000	0.00000	-0.00080
	501	0.00000	0.00000	0.00000	0.00000	0.00000	-0.00107
	502	0.00000	0.00000	0.00000	0.00000	0.00000	-0.00124
	503	0.00000	0.00000	0.00000	0.00000	0.00000	-0.00134
	504	0.00000	0.00000	0.00000	0.00000	0.00000	-0.00137
	505	0.00000	0.00000	0.00000	0.00000	0.00000	-0.00135
	506	0.00000	0.00000	0.00000	0.00000	0.00000	-0.00129
	507	0.00000	0.00000	0.00000	0.00000	0.00000	-0.00130
	508	0.00000	0.00000	0.00000	0.00000	0.00000	-0.00147
	509	0.00000	0.00000	0.00000	0.00000	0.00000	-0.00153
	510	0.00000	0.00000	0.00000	0.00000	0.00000	-0.00152
	511	0.00000	0.00000	0.00000	0.00000	0.00000	-0.00146
	5000	0.00000	0.00000	0.00000	0.00000	0.00000	-0.00079
	5001	0.00000	0.00000	0.00000	0.00000	0.00000	-0.00099
	5002	0.00000	0.00000	0.00000	0.00000	0.00000	-0.00118
	5003	0.00000	0.00000	0.00000	0.00000	0.00000	-0.00146
	5004	0.00000	0.00000	0.00000	0.00000	0.00000	-0.00162
	5005	0.00000	0.00000	0.00000	0.00000	0.00000	-0.00168
	5006	0.00000	0.00000	0.00000	0.00000	0.00000	-0.00166
	5007	0.00000	0.00000	0.00000	0.00000	0.00000	-0.00161
	5008	0.00000	0.00000	0.00000	0.00000	0.00000	-0.00149

********** END OF LATEST ANALYSIS RESULT **********

```
394. LOAD LIST 300 TO 311 400 TO 411 3000 TO 3008 4000 TO 4008
395. PRINT MEMBER FORCES ALL
```

MEMBER END FORCES STRUCTURE TYPE = SPACE

ALL UNITS ARE -- KIP FEET (LOCAL)

MEMBER	LOAD	JT	AXIAL	SHEAR-Y	SHEAR-Z	TORSION	MOM-Y	MOM-Z
1	300	1	10.50	2.73	0.00	0.00	0.00	0.00
		3	-9.26	4.50	0.00	0.00	0.00	-14.71
	301	1	10.16	2.52	0.00	0.00	0.00	0.00
		3	-8.92	4.71	0.00	0.00	0.00	-16.74
	302	1	9.83	2.36	0.00	0.00	0.00	0.00
		3	-8.58	4.87	0.00	0.00	0.00	-18.42
	303	1	9.49	2.22	0.00	0.00	0.00	0.00
		3	-8.24	5.01	0.00	0.00	0.00	-19.77
	304	1	9.15	2.12	0.00	0.00	0.00	0.00
		3	-7.91	5.11	0.00	0.00	0.00	-20.78
	305	1	8.82	2.05	0.00	0.00	0.00	0.00
		3	-7.57	5.18	0.00	0.00	0.00	-21.46
	306	1	8.48	2.02	0.00	0.00	0.00	0.00
		3	-7.23	5.21	0.00	0.00	0.00	-21.80
	307	1	12.73	1.97	0.00	0.00	0.00	0.00
		3	-11.49	5.26	0.00	0.00	0.00	-22.29
	308	1	12.06	1.79	0.00	0.00	0.00	0.00
		3	-10.81	5.44	0.00	0.00	0.00	-24.12
	309	1	11.38	1.67	0.00	0.00	0.00	0.00
		3	-10.14	5.56	0.00	0.00	0.00	-25.27
	310	1	10.71	1.62	0.00	0.00	0.00	0.00
		3	-9.47	5.61	0.00	0.00	0.00	-25.75
	311	1	10.04	1.64	0.00	0.00	0.00	0.00
		3	-8.79	5.59	0.00	0.00	0.00	-25.55
	400	1	10.50	-1.63	0.00	0.00	0.00	0.00
		3	-9.26	1.08	0.00	0.00	0.00	-11.26
	401	1	10.16	-1.83	0.00	0.00	0.00	0.00
		3	-8.92	1.28	0.00	0.00	0.00	-13.28
	402	1	9.83	-2.00	0.00	0.00	0.00	0.00
		3	-8.58	1.45	0.00	0.00	0.00	-14.97
	403	1	9.49	-2.14	0.00	0.00	0.00	0.00
		3	-8.24	1.59	0.00	0.00	0.00	-16.32
	404	1	9.15	-2.24	0.00	0.00	0.00	0.00
		3	-7.91	1.69	0.00	0.00	0.00	-17.33
	405	1	8.82	-2.30	0.00	0.00	0.00	0.00
		3	-7.57	1.75	0.00	0.00	0.00	-18.01
	406	1	8.48	-2.34	0.00	0.00	0.00	0.00
		3	-7.23	1.79	0.00	0.00	0.00	-18.34
	407	1	12.73	-2.39	0.00	0.00	0.00	0.00
		3	-11.49	1.84	0.00	0.00	0.00	-18.84
	408	1	12.06	-2.57	0.00	0.00	0.00	0.00
		3	-10.81	2.02	0.00	0.00	0.00	-20.67

MEMBER END FORCES STRUCTURE TYPE = SPACE

ALL UNITS ARE -- KIP FEET (LOCAL)

MEMBER	LOAD	JT	AXIAL	SHEAR-Y	SHEAR-Z	TORSION	MOM-Y	MOM-Z
	409	1	11.38	-2.69	0.00	0.00	0.00	0.00
		3	-10.14	2.14	0.00	0.00	0.00	-21.82
	410	1	10.71	-2.73	0.00	0.00	0.00	0.00
		3	-9.47	2.18	0.00	0.00	0.00	-22.30
	411	1	10.04	-2.71	0.00	0.00	0.00	0.00
		3	-8.79	2.16	0.00	0.00	0.00	-22.10
	3000	1	9.53	2.74	0.00	0.00	0.00	0.00
		3	-8.28	4.49	0.00	0.00	0.00	-14.61
	3001	1	9.26	2.58	0.00	0.00	0.00	0.00
		3	-8.02	4.65	0.00	0.00	0.00	-16.19
	3002	1	12.48	2.41	0.00	0.00	0.00	0.00
		3	-11.23	4.82	0.00	0.00	0.00	-17.87
	3003	1	11.95	2.15	0.00	0.00	0.00	0.00
		3	-10.71	5.08	0.00	0.00	0.00	-20.50
	3004	1	11.42	1.94	0.00	0.00	0.00	0.00
		3	-10.18	5.29	0.00	0.00	0.00	-22.61
	3005	1	10.90	1.78	0.00	0.00	0.00	0.00
		3	-9.65	5.45	0.00	0.00	0.00	-24.19
	3006	1	10.37	1.67	0.00	0.00	0.00	0.00
		3	-9.13	5.56	0.00	0.00	0.00	-25.25
	3007	1	9.95	1.62	0.00	0.00	0.00	0.00
		3	-8.71	5.61	0.00	0.00	0.00	-25.80
	3008	1	9.43	1.61	0.00	0.00	0.00	0.00
		3	-8.18	5.62	0.00	0.00	0.00	-25.91
	4000	1	9.53	-1.62	0.00	0.00	0.00	0.00
		3	-8.28	1.07	0.00	0.00	0.00	-11.16
	4001	1	9.26	-1.78	0.00	0.00	0.00	0.00
		3	-8.02	1.23	0.00	0.00	0.00	-12.74
	4002	1	12.48	-1.94	0.00	0.00	0.00	0.00
		3	-11.23	1.39	0.00	0.00	0.00	-14.41
	4003	1	11.95	-2.21	0.00	0.00	0.00	0.00
		3	-10.71	1.66	0.00	0.00	0.00	-17.05
	4004	1	11.42	-2.42	0.00	0.00	0.00	0.00
		3	-10.18	1.87	0.00	0.00	0.00	-19.16
	4005	1	10.90	-2.58	0.00	0.00	0.00	0.00
		3	-9.65	2.03	0.00	0.00	0.00	-20.74
	4006	1	10.37	-2.68	0.00	0.00	0.00	0.00
		3	-9.13	2.13	0.00	0.00	0.00	-21.79
	4007	1	9.95	-2.74	0.00	0.00	0.00	0.00
		3	-8.71	2.19	0.00	0.00	0.00	-22.35
	4008	1	9.43	-2.75	0.00	0.00	0.00	0.00
		3	-8.18	2.20	0.00	0.00	0.00	-22.46
2	300	2	6.12	-2.73	0.00	0.00	0.00	0.00
		5	-4.87	-4.50	0.00	0.00	0.00	14.71

MEMBER END FORCES STRUCTURE TYPE = SPACE

ALL UNITS ARE -- KIP FEET (LOCAL)

MEMBER	LOAD	JT	AXIAL	SHEAR-Y	SHEAR-Z	TORSION	MOM-Y	MOM-Z
	301	2	6.46	-2.52	0.00	0.00	0.00	0.00
		5	-5.21	-4.71	0.00	0.00	0.00	16.74
	302	2	6.79	-2.36	0.00	0.00	0.00	0.00
		5	-5.55	-4.87	0.00	0.00	0.00	18.42
	303	2	7.13	-2.22	0.00	0.00	0.00	0.00
		5	-5.88	-5.01	0.00	0.00	0.00	19.77
	304	2	7.47	-2.12	0.00	0.00	0.00	0.00
		5	-6.22	-5.11	0.00	0.00	0.00	20.78
	305	2	7.80	-2.05	0.00	0.00	0.00	0.00
		5	-6.56	-5.18	0.00	0.00	0.00	21.46
	306	2	8.14	-2.02	0.00	0.00	0.00	0.00
		5	-6.90	-5.21	0.00	0.00	0.00	21.80
	307	2	8.41	-1.97	0.00	0.00	0.00	0.00
		5	-7.16	-5.26	0.00	0.00	0.00	22.29
	308	2	9.08	-1.79	0.00	0.00	0.00	0.00
		5	-7.84	-5.44	0.00	0.00	0.00	24.12
	309	2	9.76	-1.67	0.00	0.00	0.00	0.00
		5	-8.51	-5.56	0.00	0.00	0.00	25.27
	310	2	10.43	-1.62	0.00	0.00	0.00	0.00
		5	-9.19	-5.61	0.00	0.00	0.00	25.75
	311	2	11.10	-1.64	0.00	0.00	0.00	0.00
		5	-9.86	-5.59	0.00	0.00	0.00	25.55
	400	2	6.12	1.63	0.00	0.00	0.00	0.00
		5	-4.87	-1.08	0.00	0.00	0.00	11.26
	401	2	6.46	1.83	0.00	0.00	0.00	0.00
		5	-5.21	-1.28	0.00	0.00	0.00	13.28
	402	2	6.79	2.00	0.00	0.00	0.00	0.00
		5	-5.55	-1.45	0.00	0.00	0.00	14.97
	403	2	7.13	2.14	0.00	0.00	0.00	0.00
		5	-5.88	-1.59	0.00	0.00	0.00	16.32
	404	2	7.47	2.24	0.00	0.00	0.00	0.00
		5	-6.22	-1.69	0.00	0.00	0.00	17.33
	405	2	7.80	2.30	0.00	0.00	0.00	0.00
		5	-6.56	-1.75	0.00	0.00	0.00	18.01
	406	2	8.14	2.34	0.00	0.00	0.00	0.00
		5	-6.90	-1.79	0.00	0.00	0.00	18.34
	407	2	8.41	2.39	0.00	0.00	0.00	0.00
		5	-7.16	-1.84	0.00	0.00	0.00	18.84
	408	2	9.08	2.57	0.00	0.00	0.00	0.00
		5	-7.84	-2.02	0.00	0.00	0.00	20.67
	409	2	9.76	2.69	0.00	0.00	0.00	0.00
		5	-8.51	-2.14	0.00	0.00	0.00	21.82
	410	2	10.43	2.73	0.00	0.00	0.00	0.00
		5	-9.19	-2.18	0.00	0.00	0.00	22.30
	411	2	11.10	2.71	0.00	0.00	0.00	0.00
		5	-9.86	-2.16	0.00	0.00	0.00	22.10

MEMBER END FORCES STRUCTURE TYPE = SPACE

ALL UNITS ARE -- KIP FEET (LOCAL)

MEMBER	LOAD	JT	AXIAL	SHEAR-Y	SHEAR-Z	TORSION	MOM-Y	MOM-Z
	3000	2	6.10	-2.74	0.00	0.00	0.00	0.00
		5	-4.86	-4.49	0.00	0.00	0.00	14.61
	3001	2	6.37	-2.58	0.00	0.00	0.00	0.00
		5	-5.12	-4.65	0.00	0.00	0.00	16.19
	3002	2	6.68	-2.41	0.00	0.00	0.00	0.00
		5	-5.44	-4.82	0.00	0.00	0.00	17.87
	3003	2	7.21	-2.15	0.00	0.00	0.00	0.00
		5	-5.97	-5.08	0.00	0.00	0.00	20.50
	3004	2	7.74	-1.94	0.00	0.00	0.00	0.00
		5	-6.49	-5.29	0.00	0.00	0.00	22.61
	3005	2	8.26	-1.78	0.00	0.00	0.00	0.00
		5	-7.02	-5.45	0.00	0.00	0.00	24.19
	3006	2	8.79	-1.67	0.00	0.00	0.00	0.00
		5	-7.55	-5.56	0.00	0.00	0.00	25.25
	3007	2	9.21	-1.62	0.00	0.00	0.00	0.00
		5	-7.96	-5.61	0.00	0.00	0.00	25.80
	3008	2	9.73	-1.61	0.00	0.00	0.00	0.00
		5	-8.49	-5.62	0.00	0.00	0.00	25.91
	4000	2	6.10	1.62	0.00	0.00	0.00	0.00
		5	-4.86	-1.07	0.00	0.00	0.00	11.16
	4001	2	6.37	1.78	0.00	0.00	0.00	0.00
		5	-5.12	-1.23	0.00	0.00	0.00	12.74
	4002	2	6.68	1.94	0.00	0.00	0.00	0.00
		5	-5.44	-1.39	0.00	0.00	0.00	14.41
	4003	2	7.21	2.21	0.00	0.00	0.00	0.00
		5	-5.97	-1.66	0.00	0.00	0.00	17.05
	4004	2	7.74	2.42	0.00	0.00	0.00	0.00
		5	-6.49	-1.87	0.00	0.00	0.00	19.16
	4005	2	8.26	2.58	0.00	0.00	0.00	0.00
		5	-7.02	-2.03	0.00	0.00	0.00	20.74
	4006	2	8.79	2.68	0.00	0.00	0.00	0.00
		5	-7.55	-2.13	0.00	0.00	0.00	21.79
	4007	2	9.21	2.74	0.00	0.00	0.00	0.00
		5	-7.96	-2.19	0.00	0.00	0.00	22.35
	4008	2	9.73	2.75	0.00	0.00	0.00	0.00
		5	-8.49	-2.20	0.00	0.00	0.00	22.46
3	300	3	4.50	9.26	0.00	0.00	0.00	13.87
		4	-4.50	0.07	0.00	0.00	0.00	16.45
	301	3	4.71	8.92	0.00	0.00	0.00	16.17
		4	-4.71	0.41	0.00	0.00	0.00	18.81
	302	3	4.87	8.58	0.00	0.00	0.00	18.11
		4	-4.87	0.74	0.00	0.00	0.00	21.53
	303	3	5.01	8.24	0.00	0.00	0.00	19.69
		4	-5.01	1.08	0.00	0.00	0.00	24.61

MEMBER END FORCES STRUCTURE TYPE = SPACE

ALL UNITS ARE -- KIP FEET (LOCAL)

MEMBER	LOAD	JT	AXIAL	SHEAR-Y	SHEAR-Z	TORSION	MOM-Y	MOM-Z
	304	3	5.11	7.91	0.00	0.00	0.00	20.91
		4	-5.11	1.42	0.00	0.00	0.00	28.05
	305	3	5.18	7.57	0.00	0.00	0.00	21.77
		4	-5.18	1.76	0.00	0.00	0.00	31.86
	306	3	5.21	7.23	0.00	0.00	0.00	22.27
		4	-5.21	2.09	0.00	0.00	0.00	36.02
	307	3	5.26	11.49	0.00	0.00	0.00	21.03
		4	-5.26	-2.16	0.00	0.00	0.00	38.31
	308	3	5.44	10.81	0.00	0.00	0.00	23.26
		4	-5.44	-1.49	0.00	0.00	0.00	36.36
	309	3	5.56	10.14	0.00	0.00	0.00	24.77
		4	-5.56	-0.81	0.00	0.00	0.00	35.13
	310	3	5.61	9.47	0.00	0.00	0.00	25.56
		4	-5.61	-0.14	0.00	0.00	0.00	34.62
	311	3	5.59	8.79	0.00	0.00	0.00	25.62
		4	-5.59	0.53	0.00	0.00	0.00	34.83
	400	3	1.08	9.26	0.00	0.00	0.00	8.14
		4	-1.08	0.07	0.00	0.00	0.00	22.18
	401	3	1.28	8.92	0.00	0.00	0.00	10.44
		4	-1.28	0.41	0.00	0.00	0.00	24.54
	402	3	1.45	8.58	0.00	0.00	0.00	12.38
		4	-1.45	0.74	0.00	0.00	0.00	27.26
	403	3	1.59	8.24	0.00	0.00	0.00	13.95
		4	-1.59	1.08	0.00	0.00	0.00	30.34
	404	3	1.69	7.91	0.00	0.00	0.00	15.17
		4	-1.69	1.42	0.00	0.00	0.00	33.79
	405	3	1.75	7.57	0.00	0.00	0.00	16.03
		4	-1.75	1.76	0.00	0.00	0.00	37.59
	406	3	1.79	7.23	0.00	0.00	0.00	16.53
		4	-1.79	2.09	0.00	0.00	0.00	41.75
	407	3	1.84	11.49	0.00	0.00	0.00	15.30
		4	-1.84	-2.16	0.00	0.00	0.00	44.04
	408	3	2.02	10.81	0.00	0.00	0.00	17.53
		4	-2.02	-1.49	0.00	0.00	0.00	42.09
	409	3	2.14	10.14	0.00	0.00	0.00	19.03
		4	-2.14	-0.81	0.00	0.00	0.00	40.86
	410	3	2.18	9.47	0.00	0.00	0.00	19.82
		4	-2.18	-0.14	0.00	0.00	0.00	40.35
	411	3	2.16	8.79	0.00	0.00	0.00	19.89
		4	-2.16	0.53	0.00	0.00	0.00	40.56
	3000	3	4.49	8.28	0.00	0.00	0.00	14.17
		4	-4.49	0.05	0.00	0.00	0.00	16.35
	3001	3	4.65	8.02	0.00	0.00	0.00	15.96
		4	-4.65	0.32	0.00	0.00	0.00	18.19
	3002	3	4.82	11.23	0.00	0.00	0.00	16.42
		4	-4.82	0.64	0.00	0.00	0.00	20.67

MEMBER END FORCES STRUCTURE TYPE = SPACE

ALL UNITS ARE -- KIP FEET (LOCAL)

MEMBER	LOAD	JT	AXIAL	SHEAR-Y	SHEAR-Z	TORSION	MOM-Y	MOM-Z
	3003	3	5.08	10.71	0.00	0.00	0.00	19.44
		4	-5.08	1.16	0.00	0.00	0.00	24.92
	3004	3	5.29	10.18	0.00	0.00	0.00	21.91
		4	-5.29	1.69	0.00	0.00	0.00	29.74
	3005	3	5.45	9.65	0.00	0.00	0.00	23.82
		4	-5.45	2.22	0.00	0.00	0.00	35.12
	3006	3	5.56	9.13	0.00	0.00	0.00	25.16
		4	-5.56	2.74	0.00	0.00	0.00	41.06
	3007	3	5.61	8.71	0.00	0.00	0.00	25.93
		4	-5.61	-0.37	0.00	0.00	0.00	45.46
	3008	3	5.62	8.18	0.00	0.00	0.00	26.26
		4	-5.62	0.15	0.00	0.00	0.00	45.34
	4000	3	1.07	8.28	0.00	0.00	0.00	8.44
		4	-1.07	0.05	0.00	0.00	0.00	22.08
	4001	3	1.23	8.02	0.00	0.00	0.00	10.23
		4	-1.23	0.32	0.00	0.00	0.00	23.92
	4002	3	1.39	11.23	0.00	0.00	0.00	10.68
		4	-1.39	0.64	0.00	0.00	0.00	26.40
	4003	3	1.66	10.71	0.00	0.00	0.00	13.71
		4	-1.66	1.16	0.00	0.00	0.00	30.66
	4004	3	1.87	10.18	0.00	0.00	0.00	16.18
		4	-1.87	1.69	0.00	0.00	0.00	35.47
	4005	3	2.03	9.65	0.00	0.00	0.00	18.08
		4	-2.03	2.22	0.00	0.00	0.00	40.85
	4006	3	2.13	9.13	0.00	0.00	0.00	19.43
		4	-2.13	2.74	0.00	0.00	0.00	46.79
	4007	3	2.19	8.71	0.00	0.00	0.00	20.20
		4	-2.19	-0.37	0.00	0.00	0.00	51.19
	4008	3	2.20	8.18	0.00	0.00	0.00	20.53
		4	-2.20	0.15	0.00	0.00	0.00	51.07
4	300	5	4.50	4.87	0.00	0.00	0.00	15.69
		4	-4.50	-0.07	0.00	0.00	0.00	16.45
	301	5	4.71	5.21	0.00	0.00	0.00	17.71
		4	-4.71	-0.41	0.00	0.00	0.00	18.81
	302	5	4.87	5.55	0.00	0.00	0.00	19.37
		4	-4.87	-0.74	0.00	0.00	0.00	21.53
	303	5	5.01	5.88	0.00	0.00	0.00	20.67
		4	-5.01	-1.08	0.00	0.00	0.00	24.61
	304	5	5.11	6.22	0.00	0.00	0.00	21.61
		4	-5.11	-1.42	0.00	0.00	0.00	28.05
	305	5	5.18	6.56	0.00	0.00	0.00	22.19
		4	-5.18	-1.76	0.00	0.00	0.00	31.86
	306	5	5.21	6.90	0.00	0.00	0.00	22.41
		4	-5.21	-2.09	0.00	0.00	0.00	36.02

MEMBER END FORCES STRUCTURE TYPE = SPACE

ALL UNITS ARE -- KIP FEET (LOCAL)

MEMBER	LOAD	JT	AXIAL	SHEAR-Y	SHEAR-Z	TORSION	MOM-Y	MOM-Z
	307	5	5.26	7.16	0.00	0.00	0.00	22.83
		4	-5.26	2.16	0.00	0.00	0.00	38.31
	308	5	5.44	7.84	0.00	0.00	0.00	24.49
		4	-5.44	1.49	0.00	0.00	0.00	36.36
	309	5	5.56	8.51	0.00	0.00	0.00	25.44
		4	-5.56	0.81	0.00	0.00	0.00	35.13
	310	5	5.61	9.19	0.00	0.00	0.00	25.67
		4	-5.61	0.14	0.00	0.00	0.00	34.62
	311	5	5.59	9.86	0.00	0.00	0.00	25.18
		4	-5.59	-0.53	0.00	0.00	0.00	34.83
	400	5	1.08	4.87	0.00	0.00	0.00	9.96
		4	-1.08	-0.07	0.00	0.00	0.00	22.18
	401	5	1.28	5.21	0.00	0.00	0.00	11.97
		4	-1.28	-0.41	0.00	0.00	0.00	24.54
	402	5	1.45	5.55	0.00	0.00	0.00	13.63
		4	-1.45	-0.74	0.00	0.00	0.00	27.26
	403	5	1.59	5.88	0.00	0.00	0.00	14.93
		4	-1.59	-1.08	0.00	0.00	0.00	30.34
	404	5	1.69	6.22	0.00	0.00	0.00	15.87
		4	-1.69	-1.42	0.00	0.00	0.00	33.79
	405	5	1.75	6.56	0.00	0.00	0.00	16.45
		4	-1.75	-1.76	0.00	0.00	0.00	37.59
	406	5	1.79	6.90	0.00	0.00	0.00	16.67
		4	-1.79	-2.09	0.00	0.00	0.00	41.75
	407	5	1.84	7.16	0.00	0.00	0.00	17.09
		4	-1.84	2.16	0.00	0.00	0.00	44.04
	408	5	2.02	7.84	0.00	0.00	0.00	18.76
		4	-2.02	1.49	0.00	0.00	0.00	42.09
	409	5	2.14	8.51	0.00	0.00	0.00	19.71
		4	-2.14	0.81	0.00	0.00	0.00	40.86
	410	5	2.18	9.19	0.00	0.00	0.00	19.94
		4	-2.18	0.14	0.00	0.00	0.00	40.35
	411	5	2.16	9.86	0.00	0.00	0.00	19.45
		4	-2.16	-0.53	0.00	0.00	0.00	40.56
	3000	5	4.49	4.86	0.00	0.00	0.00	15.59
		4	-4.49	-0.05	0.00	0.00	0.00	16.35
	3001	5	4.65	5.12	0.00	0.00	0.00	17.16
		4	-4.65	-0.32	0.00	0.00	0.00	18.19
	3002	5	4.82	5.44	0.00	0.00	0.00	18.82
		4	-4.82	-0.64	0.00	0.00	0.00	20.67
	3003	5	5.08	5.97	0.00	0.00	0.00	21.41
		4	-5.08	-1.16	0.00	0.00	0.00	24.92
	3004	5	5.29	6.49	0.00	0.00	0.00	23.44
		4	-5.29	-1.69	0.00	0.00	0.00	29.74
	3005	5	5.45	7.02	0.00	0.00	0.00	24.91
		4	-5.45	-2.22	0.00	0.00	0.00	35.12

MEMBER END FORCES STRUCTURE TYPE = SPACE

ALL UNITS ARE -- KIP FEET (LOCAL)

MEMBER	LOAD	JT	AXIAL	SHEAR-Y	SHEAR-Z	TORSION	MOM-Y	MOM-Z
	3006	5	5.56	7.55	0.00	0.00	0.00	25.81
		4	-5.56	-2.74	0.00	0.00	0.00	41.06
	3007	5	5.61	7.96	0.00	0.00	0.00	26.24
		4	-5.61	0.37	0.00	0.00	0.00	45.46
	3008	5	5.62	8.49	0.00	0.00	0.00	26.14
		4	-5.62	-0.15	0.00	0.00	0.00	45.34
	4000	5	1.07	4.86	0.00	0.00	0.00	9.86
		4	-1.07	-0.05	0.00	0.00	0.00	22.08
	4001	5	1.23	5.12	0.00	0.00	0.00	11.43
		4	-1.23	-0.32	0.00	0.00	0.00	23.92
	4002	5	1.39	5.44	0.00	0.00	0.00	13.09
		4	-1.39	-0.64	0.00	0.00	0.00	26.40
	4003	5	1.66	5.97	0.00	0.00	0.00	15.68
		4	-1.66	-1.16	0.00	0.00	0.00	30.66
	4004	5	1.87	6.49	0.00	0.00	0.00	17.71
		4	-1.87	-1.69	0.00	0.00	0.00	35.47
	4005	5	2.03	7.02	0.00	0.00	0.00	19.18
		4	-2.03	-2.22	0.00	0.00	0.00	40.85
	4006	5	2.13	7.55	0.00	0.00	0.00	20.08
		4	-2.13	-2.74	0.00	0.00	0.00	46.79
	4007	5	2.19	7.96	0.00	0.00	0.00	20.51
		4	-2.19	0.37	0.00	0.00	0.00	51.19
	4008	5	2.20	8.49	0.00	0.00	0.00	20.40
		4	-2.20	-0.15	0.00	0.00	0.00	51.07

********** END OF LATEST ANALYSIS RESULT **********

```
396. ***
397. LOAD LIST 100 TO 111 200 TO 211 1000 TO 1008 2001 TO 2008
398. PRINT FORCE ENVELOPE NSECTION 4 ALL
```

MEMBER FORCE ENVELOPE

ALL UNITS ARE KIP FEET

MEMB	DISTANCE		FY	LD	MZ	LD	FZ	LD	MY	LD
1	0.00	MAX	3.99	1000	0.00	2008	0.00	2008	0.00	2008
		MIN	-4.09	2008	0.00	2008	0.00	2008	0.00	2008
	0.83	MAX	2.74	1000	3.34	2008	0.00	2008	0.00	2008
		MIN	-3.94	2008	-2.80	1000	0.00	2008	0.00	2008
	1.67	MAX	1.56	1000	6.57	2008	0.00	2008	0.00	2008
		MIN	-3.81	2008	-4.59	1000	0.00	2008	0.00	2008
	2.50	MAX	0.45	1000	9.69	2008	0.00	2008	0.00	2008
		MIN	-3.69	2008	-5.43	1000	0.00	2008	0.00	2008
	3.33	MAX	-0.60	1000	12.73	2008	0.00	2008	0.00	2008
		MIN	-3.60	2008	-5.36	1000	0.00	2008	0.00	2008
	4.17	MAX	-1.57	200	15.70	2008	0.00	2008	0.00	2008
		MIN	-3.56	1008	-4.45	1000	0.00	2008	0.00	2008
	5.00	MAX	-1.51	200	18.61	2008	0.00	2008	0.00	2008
		MIN	-4.47	1008	-2.75	1000	0.00	2008	0.00	2008
	5.83	MAX	-1.47	200	21.49	2008	0.00	2008	0.00	2008
		MIN	-5.32	1008	-0.31	1000	0.00	2008	0.00	2008
	6.67	MAX	-1.46	200	24.34	2008	0.00	2008	0.00	2008
		MIN	-6.11	1008	2.81	1000	0.00	2008	0.00	2008
	7.50	MAX	-1.46	200	27.19	2008	0.00	2008	0.00	2008
		MIN	-6.83	1008	6.55	1000	0.00	2008	0.00	2008
	8.33	MAX	-1.48	200	30.04	2008	0.00	2008	0.00	2008
		MIN	-7.48	1008	10.87	1000	0.00	2008	0.00	2008
	9.17	MAX	-1.52	200	33.83	1008	0.00	2008	0.00	2008
		MIN	-8.07	1008	14.95	200	0.00	2008	0.00	2008
	10.00	MAX	-1.57	200	40.78	1008	0.00	2008	0.00	2008
		MIN	-8.59	1008	16.24	200	0.00	2008	0.00	2008

MAX/MIN FORCE VALUES FOR MEMB 1, AMONGST ALL SECT LOCATIONS

	FY/ FZ	DIST DIST	LD LD	MZ/ MY	DIST DIST	LD LD	FX	DIST	LD
MAX.	3.99	0.00	1000	40.78	10.00	1008			
	0.00	0.00	100	0.00	0.00	100	20.20 C	0.00	107
MIN.	-8.59	10.00	1008	-5.43	2.50	1000			
	0.00	10.00	2008	0.00	10.00	2008	11.07 C	10.00	206

2	0.00	MAX	4.09	2008	0.00	2008	0.00	2008	0.00	2008
		MIN	-3.99	1000	0.00	2008	0.00	2008	0.00	2008
	0.83	MAX	3.94	2008	2.80	1000	0.00	2008	0.00	2008
		MIN	-2.74	1000	-3.34	2008	0.00	2008	0.00	2008

1.67	MAX	3.81	2008	4.59	1000	0.00	2008	0.00	2008
	MIN	-1.56	1000	-6.57	2008	0.00	2008	0.00	2008
2.50	MAX	3.69	2008	5.43	1000	0.00	2008	0.00	2008
	MIN	-0.45	1000	-9.69	2008	0.00	2008	0.00	2008
3.33	MAX	3.60	2008	5.36	1000	0.00	2008	0.00	2008
	MIN	0.60	1000	-12.73	2008	0.00	2008	0.00	2008
4.17	MAX	3.56	1008	4.45	1000	0.00	2008	0.00	2008
	MIN	1.57	200	-15.70	2008	0.00	2008	0.00	2008
5.00	MAX	4.47	1008	2.75	1000	0.00	2008	0.00	2008
	MIN	1.51	200	-18.61	2008	0.00	2008	0.00	2008
5.83	MAX	5.32	1008	0.31	1000	0.00	2008	0.00	2008
	MIN	1.47	200	-21.49	2008	0.00	2008	0.00	2008
6.67	MAX	6.11	1008	-2.81	1000	0.00	2008	0.00	2008
	MIN	1.46	200	-24.34	2008	0.00	2008	0.00	2008
7.50	MAX	6.83	1008	-6.55	1000	0.00	2008	0.00	2008
	MIN	1.46	200	-27.19	2008	0.00	2008	0.00	2008
8.33	MAX	7.48	1008	-10.87	1000	0.00	2008	0.00	2008
	MIN	1.48	200	-30.04	2008	0.00	2008	0.00	2008
9.17	MAX	8.07	1008	-14.95	200	0.00	2008	0.00	2008
	MIN	1.52	200	-33.83	1008	0.00	2008	0.00	2008
10.00	MAX	8.59	1008	-16.24	200	0.00	2008	0.00	2008
	MIN	1.57	200	-40.78	1008	0.00	2008	0.00	2008

MAX/MIN FORCE VALUES FOR MEMB 2, AMONGST ALL SECT LOCATIONS

	FY/ FZ	DIST DIST	LD LD	MZ/ MY	DIST DIST	LD LD	FX	DIST	LD
MAX.	8.59	10.00	1008	5.43	2.50	1000			
	0.00	0.00	100	0.00	0.00	100	17.35 C	0.00	111
MIN.	-3.99	0.00	1000	-40.78	10.00	1008			
	0.00	10.00	2008	0.00	10.00	2008	6.91 C	10.00	1000

3	0.00	MAX	18.51	207	41.22	1008	0.00	2008	0.00	2008
		MIN	11.07	206	11.23	200	0.00	2008	0.00	2008
	1.08	MAX	16.77	208	27.74	1008	0.00	2008	0.00	2008
		MIN	6.13	200	0.37	201	0.00	2008	0.00	2008
	2.17	MAX	15.09	2004	14.87	1008	0.00	2008	0.00	2008
		MIN	4.97	201	-13.91	2003	0.00	2008	0.00	2008
	3.25	MAX	14.52	2004	2.62	1008	0.00	2008	0.00	2008
		MIN	4.40	201	-24.66	2004	0.00	2008	0.00	2008
	4.33	MAX	13.03	2005	-4.16	1000	0.00	2008	0.00	2008
		MIN	3.24	202	-38.02	2004	0.00	2008	0.00	2008
	5.42	MAX	12.46	2005	-8.67	1000	0.00	2008	0.00	2008
		MIN	2.67	202	-46.56	2005	0.00	2008	0.00	2008
	6.50	MAX	10.97	2006	-12.57	1000	0.00	2008	0.00	2008
		MIN	1.37	2003	-56.67	2005	0.00	2008	0.00	2008
	7.58	MAX	10.40	2006	-15.85	1000	0.00	2008	0.00	2008
		MIN	0.81	2003	-63.00	2006	0.00	2008	0.00	2008
	8.67	MAX	9.11	2007	-18.52	1000	0.00	2008	0.00	2008
		MIN	-0.68	2004	-69.84	2006	0.00	2008	0.00	2008
	9.75	MAX	8.54	2007	-20.57	1000	0.00	2008	0.00	2008
		MIN	-1.25	2004	-75.84	2007	0.00	2008	0.00	2008

	10.83	MAX	7.05	2008	-22.00	1000	0.00	2008	0.00 2008
		MIN	-2.74	2005	-79.63	2007	0.00	2008	0.00 2008
	11.92	MAX	6.48	2008	-22.82	1000	0.00	2008	0.00 2008
		MIN	-3.31	2005	-81.54	2008	0.00	2008	0.00 2008
	13.00	MAX	3.78	207	-23.02	1000	0.00	2008	0.00 2008
		MIN	-4.80	2006	-82.27	2007	0.00	2008	0.00 2008

MAX/MIN FORCE VALUES FOR MEMB 3, AMONGST ALL SECT LOCATIONS

	FY/ FZ	DIST DIST	LD LD	MZ/ MY	DIST DIST	LD LD	FX	DIST	LD
MAX.	18.51	0.00	107	41.22	0.00	1008			
	0.00	0.00	100	0.00	0.00	100	8.59 C	0.00	1008
MIN.	-4.80	13.00	2006	-82.27	13.00	2007			
	0.00	13.00	2008	0.00	13.00	2008	1.57 C	13.00	200

4	0.00	MAX	15.67	211	41.17	1007	0.00	2008	0.00 2008
		MIN	6.91	1000	14.41	200	0.00	2008	0.00 2008
	1.08	MAX	15.10	211	28.15	1006	0.00	2008	0.00 2008
		MIN	6.35	1000	7.20	200	0.00	2008	0.00 2008
	2.17	MAX	14.53	211	16.90	1005	0.00	2008	0.00 2008
		MIN	5.78	1000	-1.69	211	0.00	2008	0.00 2008
	3.25	MAX	13.96	211	7.28	1004	0.00	2008	0.00 2008
		MIN	5.21	1000	-17.13	211	0.00	2008	0.00 2008
	4.33	MAX	13.39	211	-0.71	1003	0.00	2008	0.00 2008
		MIN	4.64	1000	-31.94	211	0.00	2008	0.00 2008
	5.42	MAX	11.65	210	-6.85	101	0.00	2008	0.00 2008
		MIN	4.07	1000	-41.50	211	0.00	2008	0.00 2008
	6.50	MAX	11.08	210	-11.32	100	0.00	2008	0.00 2008
		MIN	3.50	1000	-51.20	210	0.00	2008	0.00 2008
	7.58	MAX	9.33	209	-14.81	1000	0.00	2008	0.00 2008
		MIN	2.60	210	-56.94	210	0.00	2008	0.00 2008
	8.67	MAX	8.76	209	-17.69	1000	0.00	2008	0.00 2008
		MIN	2.03	210	-64.15	209	0.00	2008	0.00 2008
	9.75	MAX	8.15	2008	-19.94	1000	0.00	2008	0.00 2008
		MIN	0.28	209	-71.75	2008	0.00	2008	0.00 2008
	10.83	MAX	6.67	2007	-21.59	1000	0.00	2008	0.00 2008
		MIN	-1.47	208	-80.25	2008	0.00	2008	0.00 2008
	11.92	MAX	6.10	2007	-22.61	1000	0.00	2008	0.00 2008
		MIN	-2.04	208	-81.47	2008	0.00	2008	0.00 2008
	13.00	MAX	4.80	2006	-23.02	1000	0.00	2008	0.00 2008
		MIN	-3.78	207	-82.27	2007	0.00	2008	0.00 2008

MAX/MIN FORCE VALUES FOR MEMB 4, AMONGST ALL SECT LOCATIONS

FY/ FZ	DIST DIST	LD LD	MZ/ MY	DIST DIST	LD LD	FX	DIST	LD

```
| MAX.      15.67   0.00  111      41.17   0.00 1007
|            0.00   0.00  100       0.00   0.00  100      8.59 C   0.00 1008
| MIN.      -3.78  13.00  207     -82.27  13.00 2007
|            0.00  13.00 2008       0.00  13.00 2008      1.57 C  13.00  200
|-----------------------------------------------------------------------------
```

********** END OF FORCE ENVELOPE FROM INTERNAL STORAGE **********

```
399. LOAD LIST 300 TO 311 400 TO 411 3000 TO 3008 4000 TO 4008
400. PRINT FORCE ENVELOPE NSECTION 4 ALL
```

MEMBER FORCE ENVELOPE

ALL UNITS ARE KIP FEET

MEMB	DISTANCE		FY	LD	MZ	LD	FZ	LD	MY	LD
1	0.00	MAX	2.74	3000	0.00	4008	0.00	4008	0.00	4008
		MIN	-2.75	4008	0.00	4008	0.00	4008	0.00	4008
	0.83	MAX	1.87	3000	2.23	4008	0.00	4008	0.00	4008
		MIN	-2.60	4008	-1.92	3000	0.00	4008	0.00	4008
	1.67	MAX	1.05	3000	4.34	4008	0.00	4008	0.00	4008
		MIN	-2.47	4008	-3.13	3000	0.00	4008	0.00	4008
	2.50	MAX	0.27	3000	6.35	4008	0.00	4008	0.00	4008
		MIN	-2.36	4008	-3.67	3000	0.00	4008	0.00	4008
	3.33	MAX	-0.45	3000	8.27	4008	0.00	4008	0.00	4008
		MIN	-2.26	4008	-3.59	3000	0.00	4008	0.00	4008
	4.17	MAX	-1.06	4000	10.12	4008	0.00	4008	0.00	4008
		MIN	-2.26	3008	-2.93	3000	0.00	4008	0.00	4008
	5.00	MAX	-1.00	4000	11.92	4008	0.00	4008	0.00	4008
		MIN	-2.88	3008	-1.73	3000	0.00	4008	0.00	4008
	5.83	MAX	-0.97	4000	13.68	4008	0.00	4008	0.00	4008
		MIN	-3.46	3008	-0.03	3000	0.00	4008	0.00	4008
	6.67	MAX	-0.95	4000	15.42	4008	0.00	4008	0.00	4008
		MIN	-3.99	3008	2.14	3000	0.00	4008	0.00	4008
	7.50	MAX	-0.95	4000	17.15	4008	0.00	4008	0.00	4008
		MIN	-4.47	3008	4.73	3000	0.00	4008	0.00	4008
	8.33	MAX	-0.97	4000	18.89	4008	0.00	4008	0.00	4008
		MIN	-4.90	3008	7.70	3000	0.00	4008	0.00	4008
	9.17	MAX	-1.01	4000	21.36	3008	0.00	4008	0.00	4008
		MIN	-5.29	3008	10.30	4000	0.00	4008	0.00	4008
	10.00	MAX	-1.07	4000	25.91	3008	0.00	4008	0.00	4008
		MIN	-5.62	3008	11.16	4000	0.00	4008	0.00	4008

MAX/MIN FORCE VALUES FOR MEMB 1, AMONGST ALL SECT LOCATIONS

	FY/ FZ	DIST DIST	LD LD	MZ/ MY	DIST DIST	LD LD	FX	DIST	LD
MAX.	2.74	0.00	3000	25.91	10.00	3008			
	0.00	0.00	300	0.00	0.00	300	12.73 C	0.00	307
MIN.	-5.62	10.00	3008	-3.67	2.50	3000			
	0.00	10.00	4008	0.00	10.00	4008	7.23 C	10.00	306

2	0.00	MAX	2.75	4008	0.00	4008	0.00	4008	0.00	4008
		MIN	-2.74	3000	0.00	4008	0.00	4008	0.00	4008
	0.83	MAX	2.60	4008	1.92	3000	0.00	4008	0.00	4008
		MIN	-1.87	3000	-2.23	4008	0.00	4008	0.00	4008

1.67	MAX	2.47	4008	3.13	3000	0.00	4008	0.00	4008
	MIN	-1.05	3000	-4.34	4008	0.00	4008	0.00	4008
2.50	MAX	2.36	4008	3.67	3000	0.00	4008	0.00	4008
	MIN	-0.27	3000	-6.35	4008	0.00	4008	0.00	4008
3.33	MAX	2.26	4008	3.59	3000	0.00	4008	0.00	4008
	MIN	0.45	3000	-8.27	4008	0.00	4008	0.00	4008
4.17	MAX	2.26	3008	2.93	3000	0.00	4008	0.00	4008
	MIN	1.06	4000	-10.12	4008	0.00	4008	0.00	4008
5.00	MAX	2.88	3008	1.73	3000	0.00	4008	0.00	4008
	MIN	1.00	4000	-11.92	4008	0.00	4008	0.00	4008
5.83	MAX	3.46	3008	0.03	3000	0.00	4008	0.00	4008
	MIN	0.97	4000	-13.68	4008	0.00	4008	0.00	4008
6.67	MAX	3.99	3008	-2.14	3000	0.00	4008	0.00	4008
	MIN	0.95	4000	-15.42	4008	0.00	4008	0.00	4008
7.50	MAX	4.47	3008	-4.73	3000	0.00	4008	0.00	4008
	MIN	0.95	4000	-17.15	4008	0.00	4008	0.00	4008
8.33	MAX	4.90	3008	-7.70	3000	0.00	4008	0.00	4008
	MIN	0.97	4000	-18.89	4008	0.00	4008	0.00	4008
9.17	MAX	5.29	3008	-10.30	4000	0.00	4008	0.00	4008
	MIN	1.01	4000	-21.36	3008	0.00	4008	0.00	4008
10.00	MAX	5.62	3008	-11.16	4000	0.00	4008	0.00	4008
	MIN	1.07	4000	-25.91	3008	0.00	4008	0.00	4008

MAX/MIN FORCE VALUES FOR MEMB 2, AMONGST ALL SECT LOCATIONS

	FY/ FZ	DIST DIST	LD LD	MZ/ MY	DIST DIST	LD LD	FX	DIST	LD
MAX.	5.62	10.00	3008	3.67	2.50	3000			
	0.00	0.00	300	0.00	0.00	300	11.10 C	0.00	311
MIN.	-2.74	0.00	3000	-25.91	10.00	3008			
	0.00	10.00	4008	0.00	10.00	4008	4.86 C	10.00	3000

3	0.00	MAX	11.49	407	26.26	3008	0.00	4008	0.00	4008
		MIN	7.23	306	8.14	400	0.00	4008	0.00	4008
	1.08	MAX	10.41	408	17.62	3008	0.00	4008	0.00	4008
		MIN	4.33	400	0.99	401	0.00	4008	0.00	4008
	2.17	MAX	9.38	4004	9.40	3008	0.00	4008	0.00	4008
		MIN	3.60	401	-8.03	4003	0.00	4008	0.00	4008
	3.25	MAX	8.98	3004	1.62	3008	0.00	4008	0.00	4008
		MIN	3.20	401	-14.95	4004	0.00	4008	0.00	4008
	4.33	MAX	8.05	4005	-2.94	3000	0.00	4008	0.00	4008
		MIN	2.46	402	-23.28	4004	0.00	4008	0.00	4008
	5.42	MAX	7.65	4005	-6.14	3000	0.00	4008	0.00	4008
		MIN	2.06	402	-28.78	4005	0.00	4008	0.00	4008
	6.50	MAX	6.72	4006	-8.90	3000	0.00	4008	0.00	4008
		MIN	1.24	4003	-35.08	4005	0.00	4008	0.00	4008
	7.58	MAX	6.32	4006	-11.22	3000	0.00	4008	0.00	4008
		MIN	0.84	4003	-39.15	4006	0.00	4008	0.00	4008
	8.67	MAX	5.51	4007	-13.11	3000	0.00	4008	0.00	4008
		MIN	-0.09	4004	-43.43	4006	0.00	4008	0.00	4008
	9.75	MAX	5.11	4007	-14.57	3000	0.00	4008	0.00	4008
		MIN	-0.49	3004	-47.14	4007	0.00	4008	0.00	4008

	10.83	MAX	4.18	4008	-15.60	3000	0.00	4008	0.00 4008
		MIN	-1.41	3005	-49.52	4007	0.00	4008	0.00 4008
	11.92	MAX	3.78	3008	-16.19	3000	0.00	4008	0.00 4008
		MIN	-1.82	3005	-50.73	4008	0.00	4008	0.00 4008
	13.00	MAX	2.16	407	-16.35	3000	0.00	4008	0.00 4008
		MIN	-2.74	4006	-51.19	4007	0.00	4008	0.00 4008

MAX/MIN FORCE VALUES FOR MEMB 3, AMONGST ALL SECT LOCATIONS

	FY/ FZ	DIST DIST	LD LD	MZ/ MY	DIST DIST	LD LD	FX	DIST	LD
MAX.	11.49	0.00	307	26.26	0.00	3008			
	0.00	0.00	300	0.00	0.00	300	5.62 C	0.00	3008
MIN.	-2.74	13.00	4006	-51.19	13.00	4007			
	0.00	13.00	4008	0.00	13.00	4008	1.07 C	13.00	4000

4	0.00	MAX	9.86	311	26.24	3007	0.00	4008	0.00 4008
		MIN	4.86	3000	9.86	4000	0.00	4008	0.00 4008
	1.08	MAX	9.46	411	17.86	3006	0.00	4008	0.00 4008
		MIN	4.46	4000	4.81	4000	0.00	4008	0.00 4008
	2.17	MAX	9.06	411	10.57	3005	0.00	4008	0.00 4008
		MIN	4.06	4000	-1.05	411	0.00	4008	0.00 4008
	3.25	MAX	8.66	411	4.29	3004	0.00	4008	0.00 4008
		MIN	3.66	4000	-10.64	411	0.00	4008	0.00 4008
	4.33	MAX	8.26	411	-0.97	3003	0.00	4008	0.00 4008
		MIN	3.26	4000	-19.81	411	0.00	4008	0.00 4008
	5.42	MAX	7.18	410	-5.10	301	0.00	4008	0.00 4008
		MIN	2.86	4000	-25.88	411	0.00	4008	0.00 4008
	6.50	MAX	6.78	410	-8.18	300	0.00	4008	0.00 4008
		MIN	2.46	4000	-31.96	410	0.00	4008	0.00 4008
	7.58	MAX	5.71	409	-10.63	3000	0.00	4008	0.00 4008
		MIN	1.86	410	-35.69	410	0.00	4008	0.00 4008
	8.67	MAX	5.31	409	-12.64	3000	0.00	4008	0.00 4008
		MIN	1.46	410	-40.18	409	0.00	4008	0.00 4008
	9.75	MAX	4.89	4008	-14.22	3000	0.00	4008	0.00 4008
		MIN	0.39	409	-44.81	4008	0.00	4008	0.00 4008
	10.83	MAX	3.96	4007	-15.36	3000	0.00	4008	0.00 4008
		MIN	-0.69	308	-49.87	4008	0.00	4008	0.00 4008
	11.92	MAX	3.56	4007	-16.07	3000	0.00	4008	0.00 4008
		MIN	-1.09	308	-50.69	4008	0.00	4008	0.00 4008
	13.00	MAX	2.74	4006	-16.35	3000	0.00	4008	0.00 4008
		MIN	-2.16	407	-51.19	4007	0.00	4008	0.00 4008

MAX/MIN FORCE VALUES FOR MEMB 4, AMONGST ALL SECT LOCATIONS

	FY/ FZ	DIST DIST	LD LD	MZ/ MY	DIST DIST	LD LD	FX	DIST	LD

```
| MAX.       9.86   0.00  311      26.24   0.00 3007
|            0.00   0.00  300       0.00   0.00  300      5.62 C   0.00 3008
| MIN.      -2.16  13.00  407     -51.19  13.00 4007
|            0.00  13.00 4008       0.00  13.00 4008      1.07 C  13.00 4000
|-----------------------------------------------------------------------------
```

********** END OF FORCE ENVELOPE FROM INTERNAL STORAGE **********

401. FINISH

********** END OF THE STAAD.Pro RUN **********

**** DATE= APR 1,2015 TIME= 9:50:49 ****

```
*************************************************************
*   For technical assistance on STAAD.Pro, please visit     *
*   http://selectservices.bentley.com/en-US/                *
*                                                           *
*   Details about additional assistance from                *
*   Bentley and Partners can be found at program menu       *
*   Help->Technical Support                                 *
*                                                           *
*      Copyright (c) 1997-2014 Bentley Systems, Inc.
*                http://www.bentley.com                     *
*************************************************************
```

Software licensed to	Job No	Sheet No 1	Rev
	Part		
Job Title	Ref		
	By BK	Date 03/16/15	Chd
Client	File 26x10-HL93-fixed.std	Date/Time 16-Mar-2015 13:56	

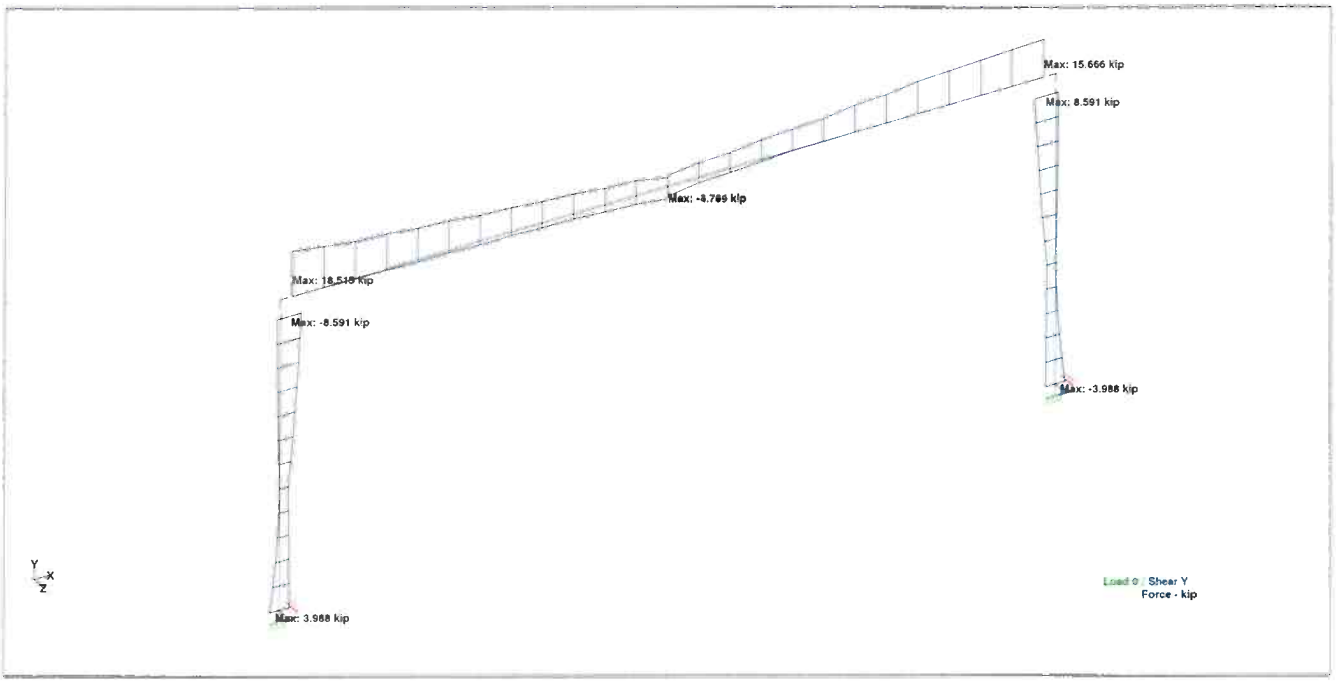

Whole Structure Fy 12kip:1ft 0 Envelope

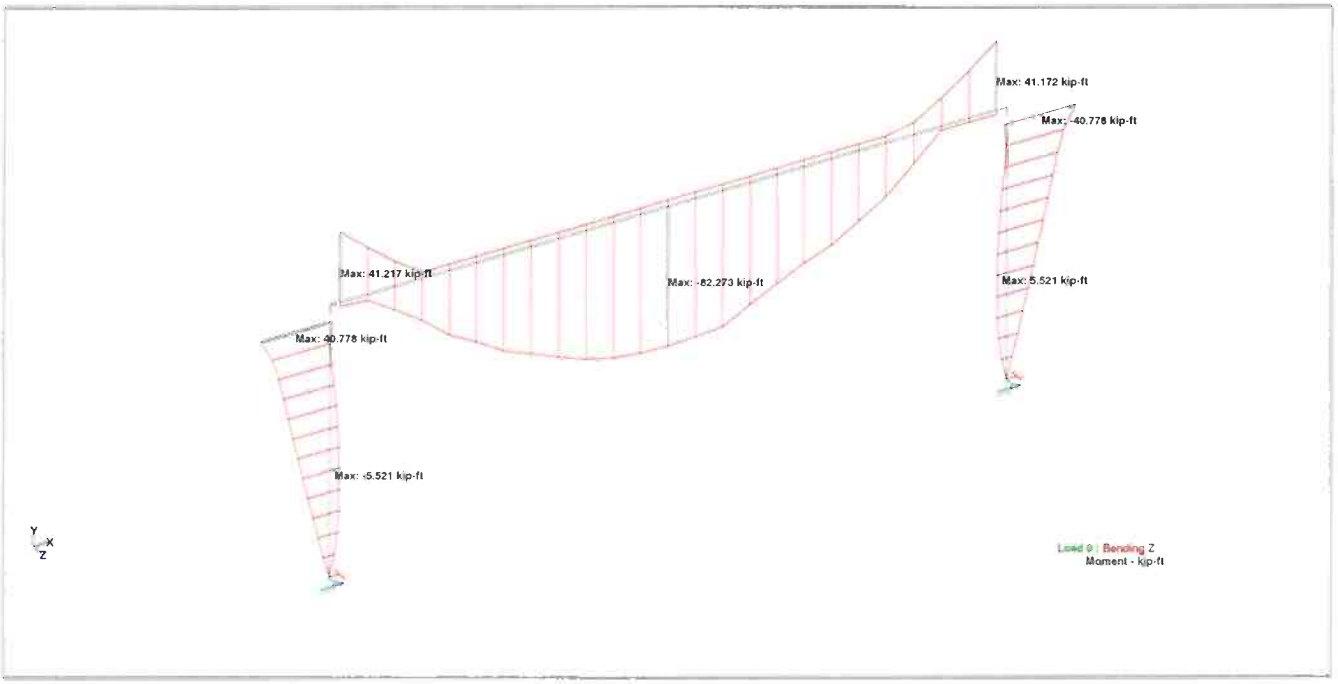

Whole Structure Mz 15kip-ft:1ft 0 Envelope

Section 4
STAAD Pro Output Spring
26’ x 10’ 3-Sided Culvert: HL93
0.5’-1’ Earth Cover Incl. BM & SF diagrams

```
**************************************************
*                                                *
*           STAAD.Pro V8i SELECTseries5          *
*           Version  20.07.10.65                 *
*           Proprietary Program of               *
*           Bentley Systems, Inc.                *
*           Date=    APR  1, 2015                *
*           Time=     9:55:14                    *
*                                                *
*      USER ID:                                  *
**************************************************
```

```
     1. STAAD SPACE
INPUT FILE: 26x10-HL93-Spring.STD
     2. START JOB INFORMATION
     3. ENGINEER DATE 03/16/15
     4. ENGINEER NAME BK
     5. END JOB INFORMATION
     6. INPUT WIDTH 79
     7. UNIT FEET KIP
     8. JOINT COORDINATES
     9. 1 -13.415 0 0; 2 13.415 0 0; 3 -13.415 10.666 0; 4 0 10.666 0
    10. 5 13.415 10.666 0
    11. MEMBER INCIDENCES
    12. 1 1 3; 2 2 5; 3 3 4; 4 5 4
    13. DEFINE MATERIAL START
    14. ISOTROPIC CONCRETE5000
    15. E 580390
    16. POISSON 0.17
    17. DENSITY 0.15
    18. ALPHA 5.5E-006
    19. DAMP 0.05
    20. END DEFINE MATERIAL
    21. MEMBER PROPERTY AMERICAN
    22. 1 2 PRIS YD 0.83 ZD 1
    23. 3 4 PRIS YD 1.33 ZD 1
    24. CONSTANTS
    25. MATERIAL CONCRETE5000 ALL
    26. SUPPORTS
    27. 1 FIXED BUT MZ
    28. 2 FIXED BUT MZ KFX 200
    29. MEMBER OFFSET
    30. 3 START 0.415 0 0
    31. 4 START -0.415 0 0
    32. 1 END 0 -0.666 0
    33. 2 END 0 -0.666 0
    34. DEFINE MOVING LOAD
    35. ***TRUCK
    36. TYPE 1 LOAD 1.13 4.522 4.522
    37. DIST 14 14
    38. ***TANDEM
```

```
 39. TYPE 2 LOAD 3.532 3.532
 40. DIST 4
 41. ***
 42. LOAD 1 LOADTYPE NONE  TITLE LOAD CASE 1- UNIFORM LOAD -COVER 1.0FT
 43. MEMBER LOAD
 44. 3 4 UNI GY -0.106
 45. SELFWEIGHT Y -1
 46. LOAD 2 LOADTYPE NONE  TITLE -EMAX
 47. MEMBER LOAD
 48. 2 TRAP GX -0.863 -0.163
 49. 1 TRAP GX 0.863 0.163
 50. LOAD 3 LOADTYPE NONE  TITLE -EMIN
 51. MEMBER LOAD
 52. 2 TRAP GX -0.432 -0.082
 53. 1 TRAP GX 0.432 0.082
 54. LOAD 4 LOADTYPE NONE  TITLE -AWL
 55. MEMBER LOAD
 56. 2 UNI GX -0.21
 57. 1 UNI GX 0.21
 58. LOAD 5 LOADTYPE NONE  TITLE -IPF-WATER INSIDE
 59. MEMBER LOAD
 60. 2 TRAP GX 0.624 0 0
 61. 1 TRAP GX -0.624 0 0
 62. LOAD 6 LOADTYPE NONE  TITLE LOAD CASE LANE
 63. MEMBER LOAD
 64. 3 4 UNI GY -0.064
 65. LOAD 10 LOADTYPE LIVE  TITLE LOAD CASE TRUCK
 66. LOAD GENERATION 12
 67. TYPE 1 -41.415 10.666 0 XINC 2
 68. LOAD 30 LOADTYPE LIVE  TITLE LOAD CASE TANDEM
**WARNING-A MOVING LOAD THAT WOULD HAVE BEEN APPLIED BEYOND THE X AND Z RANGES
          OF THE STRUCTURE HAS BEEN IGNORED. CASE=   11 WHEEL   1 OF   3
**WARNING-A MOVING LOAD THAT WOULD HAVE BEEN APPLIED BEYOND THE X AND Z RANGES
          OF THE STRUCTURE HAS BEEN IGNORED. CASE=   11 WHEEL   2 OF   3
**WARNING-A MOVING LOAD THAT WOULD HAVE BEEN APPLIED BEYOND THE X AND Z RANGES
          OF THE STRUCTURE HAS BEEN IGNORED. CASE=   12 WHEEL   1 OF   3
**WARNING-A MOVING LOAD THAT WOULD HAVE BEEN APPLIED BEYOND THE X AND Z RANGES
          OF THE STRUCTURE HAS BEEN IGNORED. CASE=   12 WHEEL   2 OF   3
**WARNING-A MOVING LOAD THAT WOULD HAVE BEEN APPLIED BEYOND THE X AND Z RANGES
          OF THE STRUCTURE HAS BEEN IGNORED. CASE=   13 WHEEL   1 OF   3
**WARNING-A MOVING LOAD THAT WOULD HAVE BEEN APPLIED BEYOND THE X AND Z RANGES
          OF THE STRUCTURE HAS BEEN IGNORED. CASE=   13 WHEEL   2 OF   3
**WARNING-A MOVING LOAD THAT WOULD HAVE BEEN APPLIED BEYOND THE X AND Z RANGES
          OF THE STRUCTURE HAS BEEN IGNORED. CASE=   14 WHEEL   1 OF   3
**WARNING-A MOVING LOAD THAT WOULD HAVE BEEN APPLIED BEYOND THE X AND Z RANGES
          OF THE STRUCTURE HAS BEEN IGNORED. CASE=   14 WHEEL   2 OF   3
**WARNING-A MOVING LOAD THAT WOULD HAVE BEEN APPLIED BEYOND THE X AND Z RANGES
          OF THE STRUCTURE HAS BEEN IGNORED. CASE=   15 WHEEL   1 OF   3
**WARNING-A MOVING LOAD THAT WOULD HAVE BEEN APPLIED BEYOND THE X AND Z RANGES
          OF THE STRUCTURE HAS BEEN IGNORED. CASE=   15 WHEEL   2 OF   3
*ADDITIONAL MOVING LOAD MESSAGES SUPPRESSED
*ADDITIONAL MOVING LOAD MESSAGES SUPPRESSED
 69. LOAD GENERATION 9
 70. TYPE 2 -17.415 10.666 0 XINC 2
 71. ***TRUCK
 72. LOAD COMB 100 COMBINATION LOAD CASE -MAX MOMENT OUTSIDE
```

```
 73. 11 1.75 6 1.75 1 1.35 2 1.35 4 1.75
 74. LOAD COMB 101 COMBINATION LOAD CASE
 75. 12 1.75 6 1.75 1 1.35 2 1.35 4 1.75
 76. LOAD COMB 102 COMBINATION LOAD CASE
 77. 13 1.75 6 1.75 1 1.35 2 1.35 4 1.75
 78. LOAD COMB 103 COMBINATION LOAD CASE
 79. 14 1.75 6 1.75 1 1.35 2 1.35 4 1.75
 80. LOAD COMB 104 COMBINATION LOAD CASE
 81. 15 1.75 6 1.75 1 1.35 2 1.35 4 1.75
 82. LOAD COMB 105 COMBINATION LOAD CASE
 83. 16 1.75 6 1.75 1 1.35 2 1.35 4 1.75
 84. LOAD COMB 106 COMBINATION LOAD CASE
 85. 17 1.75 6 1.75 1 1.35 2 1.35 4 1.75
 86. LOAD COMB 107 COMBINATION LOAD CASE
 87. 18 1.75 6 1.75 1 1.35 2 1.35 4 1.75
 88. LOAD COMB 108 COMBINATION LOAD CASE
 89. 19 1.75 6 1.75 1 1.35 2 1.35 4 1.75
 90. LOAD COMB 109 COMBINATION LOAD CASE
 91. 20 1.75 6 1.75 1 1.35 2 1.35 4 1.75
 92. LOAD COMB 110 COMBINATION LOAD CASE
 93. 21 1.75 6 1.75 1 1.35 2 1.35 4 1.75
 94. LOAD COMB 111 COMBINATION LOAD CASE
 95. 22 1.75 6 1.75 1 1.35 2 1.35 4 1.75
 96. ***
 97. LOAD COMB 200 COMBINATION LOAD CASE -MAX MOMENT INSIDE
 98. 11 1.75 6 1.75 1 1.35 2 0.5 5 1.0
 99. LOAD COMB 201 COMBINATION LOAD CASE
100. 12 1.75 6 1.75 1 1.35 2 0.5 5 1.0
101. LOAD COMB 202 COMBINATION LOAD CASE
102. 13 1.75 6 1.75 1 1.35 2 0.5 5 1.0
103. LOAD COMB 203 COMBINATION LOAD CASE
104. 14 1.75 6 1.75 1 1.35 2 0.5 5 1.0
105. LOAD COMB 204 COMBINATION LOAD CASE
106. 15 1.75 6 1.75 1 1.35 2 0.5 5 1.0
107. LOAD COMB 205 COMBINATION LOAD CASE
108. 16 1.75 6 1.75 1 1.35 2 0.5 5 1.0
109. LOAD COMB 206 COMBINATION LOAD CASE
110. 17 1.75 6 1.75 1 1.35 2 0.5 5 1.0
111. LOAD COMB 207 COMBINATION LOAD CASE
112. 18 1.75 6 1.75 1 1.35 2 0.5 5 1.0
113. LOAD COMB 208 COMBINATION LOAD CASE
114. 19 1.75 6 1.75 1 1.35 2 0.5 5 1.0
115. LOAD COMB 209 COMBINATION LOAD CASE
116. 20 1.75 6 1.75 1 1.35 2 0.5 5 1.0
117. LOAD COMB 210 COMBINATION LOAD CASE
118. 21 1.75 6 1.75 1 1.35 2 0.5 5 1.0
119. LOAD COMB 211 COMBINATION LOAD CASE
120. 22 1.75 6 1.75 1 1.35 2 0.5 5 1.0
121. ***
122. LOAD COMB 300 COMBINATION LOAD CASE -CRACK CONTROL-MAX OUTSIDE
123. 11 1.0 6 1.0 1 1.0 2 1.0 4 1.0
124. LOAD COMB 301 COMBINATION LOAD CASE
125. 12 1.0 6 1.0 1 1.0 2 1.0 4 1.0
126. LOAD COMB 302 COMBINATION LOAD CASE
127. 13 1.0 6 1.0 1 1.0 2 1.0 4 1.0
128. LOAD COMB 303 COMBINATION LOAD CASE
```

```
129. 14 1.0 6 1.0 1 1.0 2 1.0 4 1.0
130. LOAD COMB 304 COMBINATION LOAD CASE
131. 15 1.0 6 1.0 1 1.0 2 1.0 4 1.0
132. LOAD COMB 305 COMBINATION LOAD CASE
133. 16 1.0 6 1.0 1 1.0 2 1.0 4 1.0
134. LOAD COMB 306 COMBINATION LOAD CASE
135. 17 1.0 6 1.0 1 1.0 2 1.0 4 1.0
136. LOAD COMB 307 COMBINATION LOAD CASE
137. 18 1.0 6 1.0 1 1.0 2 1.0 4 1.0
138. LOAD COMB 308 COMBINATION LOAD CASE
139. 19 1.0 6 1.0 1 1.0 2 1.0 4 1.0
140. LOAD COMB 309 COMBINATION LOAD CASE
141. 20 1.0 6 1.0 1 1.0 2 1.0 4 1.0
142. LOAD COMB 310 COMBINATION LOAD CASE
143. 21 1.0 6 1.0 1 1.0 2 1.0 4 1.0
144. LOAD COMB 311 COMBINATION LOAD CASE
145. 22 1.0 6 1.0 1 1.0 2 1.0 4 1.0
146. ***
147. LOAD COMB 400 COMBINATION LOAD CASE -CRACK CONTROL-MAX INSIDE
148. 11 1.0 3 1.0 1 1.0 6 1.0 5 1.0
149. LOAD COMB 401 COMBINATION LOAD CASE
150. 12 1.0 3 1.0 1 1.0 6 1.0 5 1.0
151. LOAD COMB 402 COMBINATION LOAD CASE
152. 13 1.0 3 1.0 1 1.0 6 1.0 5 1.0
153. LOAD COMB 403 COMBINATION LOAD CASE
154. 14 1.0 3 1.0 1 1.0 6 1.0 5 1.0
155. LOAD COMB 404 COMBINATION LOAD CASE
156. 15 1.0 3 1.0 1 1.0 6 1.0 5 1.0
157. LOAD COMB 405 COMBINATION LOAD CASE
158. 16 1.0 3 1.0 1 1.0 6 1.0 5 1.0
159. LOAD COMB 406 COMBINATION LOAD CASE
160. 17 1.0 3 1.0 1 1.0 6 1.0 5 1.0
161. LOAD COMB 407 COMBINATION LOAD CASE
162. 18 1.0 3 1.0 1 1.0 6 1.0 5 1.0
163. LOAD COMB 408 COMBINATION LOAD CASE
164. 19 1.0 3 1.0 1 1.0 6 1.0 5 1.0
165. LOAD COMB 409 COMBINATION LOAD CASE
166. 20 1.0 3 1.0 1 1.0 6 1.0 5 1.0
167. LOAD COMB 410 COMBINATION LOAD CASE
168. 21 1.0 3 1.0 1 1.0 6 1.0 5 1.0
169. LOAD COMB 411 COMBINATION LOAD CASE
170. 22 1.0 3 1.0 1 1.0 6 1.0 5 1.0
171. ***
172. LOAD COMB 500 COMBINATION LOAD CASE -CHECK SUPPORT DISPL.
173. 11 1.0 6 1.0 1 1.0
174. LOAD COMB 501 COMBINATION LOAD CASE
175. 12 1.0 6 1.0 1 1.0
176. LOAD COMB 502 COMBINATION LOAD CASE
177. 13 1.0 6 1.0 1 1.0
178. LOAD COMB 503 COMBINATION LOAD CASE
179. 14 1.0 6 1.0 1 1.0
180. LOAD COMB 504 COMBINATION LOAD CASE
181. 15 1.0 6 1.0 1 1.0
182. LOAD COMB 505 COMBINATION LOAD CASE
183. 16 1.0 6 1.0 1 1.0
184. LOAD COMB 506 COMBINATION LOAD CASE
```

```
185. 17 1.0 6 1.0 1 1.0
186. LOAD COMB 507 COMBINATION LOAD CASE
187. 18 1.0 6 1.0 1 1.0
188. LOAD COMB 508 COMBINATION LOAD CASE
189. 19 1.0 6 1.0 1 1.0
190. LOAD COMB 509 COMBINATION LOAD CASE
191. 20 1.0 6 1.0 1 1.0
192. LOAD COMB 510 COMBINATION LOAD CASE
193. 21 1.0 6 1.0 1 1.0
194. LOAD COMB 511 COMBINATION LOAD CASE
195. 22 1.0 6 1.0 1 1.0
196. ***
197. LOAD COMB 600 COMBINATION LOAD CASE -CHECK DEFLEC.
198. 11 1.0 6 1.0 3 1.0
199. LOAD COMB 601 COMBINATION LOAD CASE
200. 12 1.0 6 1.0 3 1.0
201. LOAD COMB 602 COMBINATION LOAD CASE
202. 13 1.0 6 1.0 3 1.0
203. LOAD COMB 603 COMBINATION LOAD CASE
204. 14 1.0 6 1.0 3 1.0
205. LOAD COMB 604 COMBINATION LOAD CASE
206. 15 1.0 6 1.0 3 1.0
207. LOAD COMB 605 COMBINATION LOAD CASE
208. 16 1.0 6 1.0 3 1.0
209. LOAD COMB 606 COMBINATION LOAD CASE
210. 17 1.0 6 1.0 3 1.0
211. LOAD COMB 607 COMBINATION LOAD CASE
212. 18 1.0 6 1.0 3 1.0
213. LOAD COMB 608 COMBINATION LOAD CASE
214. 19 1.0 6 1.0 3 1.0
215. LOAD COMB 609 COMBINATION LOAD CASE
216. 20 1.0 6 1.0 3 1.0
217. LOAD COMB 610 COMBINATION LOAD CASE
218. 21 1.0 6 1.0 3 1.0
219. LOAD COMB 611 COMBINATION LOAD CASE
220. 22 1.0 6 1.0 3 1.0
221. LOAD COMB 700 COMBINATION LOAD CASE -LL1
222. 11 1.0 6 1.0
223. LOAD COMB 701 COMBINATION LOAD CASE
224. 12 1.0 6 1.0
225. LOAD COMB 702 COMBINATION LOAD CASE
226. 13 1.0 6 1.0
227. LOAD COMB 703 COMBINATION LOAD CASE
228. 14 1.0 6 1.0
229. LOAD COMB 704 COMBINATION LOAD CASE
230. 15 1.0 6 1.0
231. LOAD COMB 705 COMBINATION LOAD CASE
232. 16 1.0 6 1.0
233. LOAD COMB 706 COMBINATION LOAD CASE
234. 17 1.0 6 1.0
235. LOAD COMB 707 COMBINATION LOAD CASE
236. 18 1.0 6 1.0
237. LOAD COMB 708 COMBINATION LOAD CASE
238. 19 1.0 6 1.0
239. LOAD COMB 709 COMBINATION LOAD CASE
240. 20 1.0 6 1.0
```

```
241. LOAD COMB 710 COMBINATION LOAD CASE
242. 21 1.0 6 1.0
243. LOAD COMB 711 COMBINATION LOAD CASE
244. 22 1.0 6 1.0
245. ***
246. LOAD COMB 800 COMBINATION LOAD CASE -DL
247. 1 1.0 2 1.0 4 1.0
248. ***
249. ***TANDEM
250. LOAD COMB 1000 COMBINATION LOAD CASE -MAX MOMENT OUTSIDE
251. 31 1.75 6 1.75 1 1.35 2 1.35 4 1.75
252. LOAD COMB 1001 COMBINATION LOAD CASE
253. 32 1.75 6 1.75 1 1.35 2 1.35 4 1.75
254. LOAD COMB 1002 COMBINATION LOAD CASE
255. 33 1.75 6 1.75 1 1.35 2 1.35 4 1.75
256. LOAD COMB 1003 COMBINATION LOAD CASE
257. 34 1.75 6 1.75 1 1.35 2 1.35 4 1.75
258. LOAD COMB 1004 COMBINATION LOAD CASE
259. 35 1.75 6 1.75 1 1.35 2 1.35 4 1.75
260. LOAD COMB 1005 COMBINATION LOAD CASE
261. 36 1.75 6 1.75 1 1.35 2 1.35 4 1.75
262. LOAD COMB 1006 COMBINATION LOAD CASE
263. 37 1.75 6 1.75 1 1.35 2 1.35 4 1.75
264. LOAD COMB 1007 COMBINATION LOAD CASE
265. 38 1.75 6 1.75 1 1.35 2 1.35 4 1.75
266. LOAD COMB 1008 COMBINATION LOAD CASE
267. 39 1.75 6 1.75 1 1.35 2 1.35 4 1.75
268. LOAD COMB 2001 COMBINATION LOAD CASE
269. 32 1.75 6 1.75 1 1.35 2 0.5 5 1.0
270. LOAD COMB 2002 COMBINATION LOAD CASE
271. 33 1.75 6 1.75 1 1.35 2 0.5 5 1.0
272. LOAD COMB 2003 COMBINATION LOAD CASE
273. 34 1.75 6 1.75 1 1.35 2 0.5 5 1.0
274. LOAD COMB 2004 COMBINATION LOAD CASE
275. 35 1.75 6 1.75 1 1.35 2 0.5 5 1.0
276. LOAD COMB 2005 COMBINATION LOAD CASE
277. 36 1.75 6 1.75 1 1.35 2 0.5 5 1.0
278. LOAD COMB 2006 COMBINATION LOAD CASE
279. 37 1.75 6 1.75 1 1.35 2 0.5 5 1.0
280. LOAD COMB 2007 COMBINATION LOAD CASE
281. 38 1.75 6 1.75 1 1.35 2 0.5 5 1.0
282. LOAD COMB 2008 COMBINATION LOAD CASE
283. 39 1.75 6 1.75 1 1.35 2 0.5 5 1.0
284. LOAD COMB 3000 COMBINATION LOAD CASE -CRACK CONTROL-MAX OUTSIDE
285. 31 1.0 6 1.0 1 1.0 2 1.0 4 1.0
286. LOAD COMB 3001 COMBINATION LOAD CASE
287. 32 1.0 6 1.0 1 1.0 2 1.0 4 1.0
288. LOAD COMB 3002 COMBINATION LOAD CASE
289. 33 1.0 6 1.0 1 1.0 2 1.0 4 1.0
290. LOAD COMB 3003 COMBINATION LOAD CASE
291. 34 1.0 6 1.0 1 1.0 2 1.0 4 1.0
292. LOAD COMB 3004 COMBINATION LOAD CASE
293. 35 1.0 6 1.0 1 1.0 2 1.0 4 1.0
294. LOAD COMB 3005 COMBINATION LOAD CASE
295. 36 1.0 6 1.0 1 1.0 2 1.0 4 1.0
296. LOAD COMB 3006 COMBINATION LOAD CASE
```

```
297. 37 1.0 6 1.0 1 1.0 2 1.0 4 1.0
298. LOAD COMB 3007 COMBINATION LOAD CASE
299. 38 1.0 6 1.0 1 1.0 2 1.0 4 1.0
300. LOAD COMB 3008 COMBINATION LOAD CASE
301. 39 1.0 6 1.0 1 1.0 2 1.0 4 1.0
302. LOAD COMB 4000 COMBINATION LOAD CASE -CRACK CONTROL-MAX INSIDE
303. 31 1.0 3 1.0 1 1.0 6 1.0 5 1.0
304. LOAD COMB 4001 COMBINATION LOAD CASE
305. 32 1.0 3 1.0 1 1.0 6 1.0 5 1.0
306. LOAD COMB 4002 COMBINATION LOAD CASE
307. 33 1.0 3 1.0 1 1.0 6 1.0 5 1.0
308. LOAD COMB 4003 COMBINATION LOAD CASE
309. 34 1.0 3 1.0 1 1.0 6 1.0 5 1.0
310. LOAD COMB 4004 COMBINATION LOAD CASE
311. 35 1.0 3 1.0 1 1.0 6 1.0 5 1.0
312. LOAD COMB 4005 COMBINATION LOAD CASE
313. 36 1.0 3 1.0 1 1.0 6 1.0 5 1.0
314. LOAD COMB 4006 COMBINATION LOAD CASE
315. 37 1.0 3 1.0 1 1.0 6 1.0 5 1.0
316. LOAD COMB 4007 COMBINATION LOAD CASE
317. 38 1.0 3 1.0 1 1.0 6 1.0 5 1.0
318. LOAD COMB 4008 COMBINATION LOAD CASE
319. 39 1.0 3 1.0 1 1.0 6 1.0 5 1.0
320. LOAD COMB 5000 COMBINATION LOAD CASE -CHECK SUPPORT DISPL.
321. 31 1.0 6 1.0 1 1.0
322. LOAD COMB 5001 COMBINATION LOAD CASE
323. 32 1.0 6 1.0 1 1.0
324. LOAD COMB 5002 COMBINATION LOAD CASE
325. 33 1.0 6 1.0 1 1.0
326. LOAD COMB 5003 COMBINATION LOAD CASE
327. 34 1.0 6 1.0 1 1.0
328. LOAD COMB 5004 COMBINATION LOAD CASE
329. 35 1.0 6 1.0 1 1.0
330. LOAD COMB 5005 COMBINATION LOAD CASE
331. 36 1.0 6 1.0 1 1.0
332. LOAD COMB 5006 COMBINATION LOAD CASE
333. 37 1.0 6 1.0 1 1.0
334. LOAD COMB 5007 COMBINATION LOAD CASE
335. 38 1.0 6 1.0 1 1.0
336. LOAD COMB 5008 COMBINATION LOAD CASE
337. 39 1.0 6 1.0 1 1.0
338. LOAD COMB 6000 COMBINATION LOAD CASE -CHECK DEFLEC.
339. 31 1.0 6 1.0 3 1.0
340. LOAD COMB 6001 COMBINATION LOAD CASE
341. 32 1.0 6 1.0 3 1.0
342. LOAD COMB 6002 COMBINATION LOAD CASE
343. 33 1.0 6 1.0 3 1.0
344. LOAD COMB 6003 COMBINATION LOAD CASE
345. 34 1.0 6 1.0 3 1.0
346. LOAD COMB 6004 COMBINATION LOAD CASE
347. 35 1.0 6 1.0 3 1.0
348. LOAD COMB 6005 COMBINATION LOAD CASE
349. 36 1.0 6 1.0 3 1.0
350. LOAD COMB 6006 COMBINATION LOAD CASE
351. 37 1.0 6 1.0 3 1.0
352. LOAD COMB 6007 COMBINATION LOAD CASE
```

```
353. 38 1.0 6 1.0 3 1.0
354. LOAD COMB 6008 COMBINATION LOAD CASE
355. 39 1.0 6 1.0 3 1.0
356. ***
357. LOAD COMB 7000 COMBINATION LOAD CASE -LL2
358. 31 1.0 6 1.0
359. LOAD COMB 7001 COMBINATION LOAD CASE
360. 32 1.0 6 1.0
361. LOAD COMB 7002 COMBINATION LOAD CASE
362. 33 1.0 6 1.0
363. LOAD COMB 7003 COMBINATION LOAD CASE
364. 34 1.0 6 1.0
365. LOAD COMB 7004 COMBINATION LOAD CASE
366. 35 1.0 6 1.0
367. LOAD COMB 7005 COMBINATION LOAD CASE
368. 36 1.0 6 1.0
369. LOAD COMB 7006 COMBINATION LOAD CASE
370. 37 1.0 6 1.0
371. LOAD COMB 7007 COMBINATION LOAD CASE
372. 38 1.0 6 1.0
373. LOAD COMB 7008 COMBINATION LOAD CASE
374. 39 1.0 6 1.0
375. ***
376. PERFORM ANALYSIS


        P R O B L E M   S T A T I S T I C S
        -----------------------------------

  NUMBER OF JOINTS          5  NUMBER OF MEMBERS       4
  NUMBER OF PLATES          0  NUMBER OF SOLIDS        0
  NUMBER OF SURFACES        0  NUMBER OF SUPPORTS      2


       SOLVER USED IS THE OUT-OF-CORE BASIC SOLVER

  ORIGINAL/FINAL BAND-WIDTH=     3/     3/     20 DOF
TOTAL      PRIMARY LOAD CASES =    29, TOTAL DEGREES OF FREEDOM =      21
TOTAL LOAD COMBINATION  CASES =   147  SO FAR.
  SIZE OF STIFFNESS MATRIX =        1 DOUBLE  KILO-WORDS
  REQRD/AVAIL. DISK SPACE  =     12.0/      0.0 MB


377. LOAD LIST 1 TO 6 11 TO 22 31 TO 39
378. PRINT SUPPORT REACTION ALL
```

SUPPORT REACTIONS -UNIT KIP FEET STRUCTURE TYPE = SPACE

JOINT	LOAD	FORCE-X	FORCE-Y	FORCE-Z	MOM-X	MOM-Y	MOM Z
1	1	0.83	5.22	0.00	0.00	0.00	0.00
	2	-2.66	0.00	0.00	0.00	0.00	0.00
	3	-1.33	0.00	0.00	0.00	0.00	0.00
	4	-0.87	0.00	0.00	0.00	0.00	0.00
	5	1.76	0.00	0.00	0.00	0.00	0.00
	6	0.17	0.83	0.00	0.00	0.00	0.00
	11	0.04	4.45	0.00	0.00	0.00	0.00
	12	0.23	4.11	0.00	0.00	0.00	0.00
	13	0.38	3.78	0.00	0.00	0.00	0.00
	14	0.50	3.44	0.00	0.00	0.00	0.00
	15	0.59	3.10	0.00	0.00	0.00	0.00
	16	0.66	2.77	0.00	0.00	0.00	0.00
	17	0.69	2.43	0.00	0.00	0.00	0.00
	18	0.73	6.68	0.00	0.00	0.00	0.00
	19	0.90	6.01	0.00	0.00	0.00	0.00
	20	1.00	5.34	0.00	0.00	0.00	0.00
	21	1.05	4.66	0.00	0.00	0.00	0.00
	22	1.03	3.99	0.00	0.00	0.00	0.00
	31	0.03	3.48	0.00	0.00	0.00	0.00
	32	0.18	3.21	0.00	0.00	0.00	0.00
	33	0.33	6.43	0.00	0.00	0.00	0.00
	34	0.57	5.90	0.00	0.00	0.00	0.00
	35	0.76	5.38	0.00	0.00	0.00	0.00
	36	0.90	4.85	0.00	0.00	0.00	0.00
	37	1.00	4.32	0.00	0.00	0.00	0.00
	38	1.05	3.90	0.00	0.00	0.00	0.00
	39	1.06	3.38	0.00	0.00	0.00	0.00
2	1	-0.83	5.22	0.00	0.00	0.00	0.00
	2	2.66	0.00	0.00	0.00	0.00	0.00
	3	1.33	0.00	0.00	0.00	0.00	0.00
	4	0.87	0.00	0.00	0.00	0.00	0.00
	5	-1.76	0.00	0.00	0.00	0.00	0.00
	6	-0.17	0.83	0.00	0.00	0.00	0.00
	11	-0.04	0.07	0.00	0.00	0.00	0.00
	12	-0.23	0.41	0.00	0.00	0.00	0.00
	13	-0.38	0.74	0.00	0.00	0.00	0.00
	14	-0.50	1.08	0.00	0.00	0.00	0.00
	15	-0.59	1.42	0.00	0.00	0.00	0.00
	16	-0.66	1.76	0.00	0.00	0.00	0.00
	17	-0.69	2.09	0.00	0.00	0.00	0.00
	18	-0.73	2.36	0.00	0.00	0.00	0.00
	19	-0.90	3.03	0.00	0.00	0.00	0.00
	20	-1.00	3.71	0.00	0.00	0.00	0.00
	21	-1.05	4.38	0.00	0.00	0.00	0.00
	22	-1.03	5.06	0.00	0.00	0.00	0.00
	31	-0.03	0.05	0.00	0.00	0.00	0.00

SUPPORT REACTIONS -UNIT KIP FEET STRUCTURE TYPE = SPACE

JOINT	LOAD	FORCE-X	FORCE-Y	FORCE-Z	MOM-X	MOM-Y	MOM Z
	32	-0.18	0.32	0.00	0.00	0.00	0.00
	33	-0.33	0.64	0.00	0.00	0.00	0.00
	34	-0.57	1.16	0.00	0.00	0.00	0.00
	35	-0.76	1.69	0.00	0.00	0.00	0.00
	36	-0.90	2.22	0.00	0.00	0.00	0.00
	37	-1.00	2.74	0.00	0.00	0.00	0.00
	38	-1.05	3.16	0.00	0.00	0.00	0.00
	39	-1.06	3.69	0.00	0.00	0.00	0.00

********** END OF LATEST ANALYSIS RESULT **********

379. PRINT FORCE ENVELOPE NSECTION 2 ALL

MEMBER FORCE ENVELOPE

ALL UNITS ARE KIP FEET

MEMB	DISTANCE		FY	LD	MZ	LD	FZ	LD	MY	LD
1	0.00	MAX	2.66	2	0.00	39	0.00	39	0.00	39
		MIN	-1.76	5	0.00	39	0.00	39	0.00	39
	0.83	MAX	1.96	2	1.26	5	0.00	39	0.00	39
		MIN	-1.27	5	-1.92	2	0.00	39	0.00	39
	1.67	MAX	1.31	2	2.12	5	0.00	39	0.00	39
		MIN	-1.06	39	-3.28	2	0.00	39	0.00	39
	2.50	MAX	0.72	2	2.65	39	0.00	39	0.00	39
		MIN	-1.06	39	-4.13	2	0.00	39	0.00	39
	3.33	MAX	0.17	4	3.53	39	0.00	39	0.00	39
		MIN	-1.06	39	-4.49	2	0.00	39	0.00	39
	4.17	MAX	0.29	5	4.42	39	0.00	39	0.00	39
		MIN	-1.06	39	-4.42	2	0.00	39	0.00	39
	5.00	MAX	0.58	5	5.30	39	0.00	39	0.00	39
		MIN	-1.06	39	-3.95	2	0.00	39	0.00	39
	5.83	MAX	0.81	5	6.18	39	0.00	39	0.00	39
		MIN	-1.19	2	-3.13	2	0.00	39	0.00	39
	6.67	MAX	1.01	5	7.07	39	0.00	39	0.00	39
		MIN	-1.54	2	-1.99	2	0.00	39	0.00	39
	7.50	MAX	1.16	5	7.95	39	0.00	39	0.00	39
		MIN	-1.85	2	-0.63	4	0.00	39	0.00	39
	8.33	MAX	1.27	5	8.84	39	0.00	39	0.00	39
		MIN	-2.11	2	-0.95	5	0.00	39	0.00	39
	9.17	MAX	1.33	5	9.72	39	0.00	39	0.00	39
		MIN	-2.31	2	-2.03	5	0.00	39	0.00	39
	10.00	MAX	1.36	5	10.60	39	0.00	39	0.00	39
		MIN	-2.47	2	-3.16	5	0.00	39	0.00	39

MAX/MIN FORCE VALUES FOR MEMB 1, AMONGST ALL SECT LOCATIONS

	FY/ FZ	DIST DIST	LD LD	MZ/ MY	DIST DIST	LD LD	FX	DIST	LD
MAX.	2.66	0.00	2	10.60	10.00	39			
	0.00	0.00	1	0.00	0.00	1	6.68 C	0.00	18
MIN.	-2.47	10.00	2	-4.49	3.33	2			
	0.00	10.00	39	0.00	10.00	39	0.00	10.00	5

2	0.00	MAX	1.76	5	0.00	39	0.00	39	0.00	39
		MIN	-2.66	2	0.00	39	0.00	39	0.00	39
	0.83	MAX	1.27	5	1.92	2	0.00	39	0.00	39
		MIN	-1.96	2	-1.26	5	0.00	39	0.00	39

1.67	MAX	1.06	39	3.28	2	0.00	39	0.00	39
	MIN	-1.31	2	-2.12	5	0.00	39	0.00	39
2.50	MAX	1.06	39	4.13	2	0.00	39	0.00	39
	MIN	-0.72	2	-2.65	39	0.00	39	0.00	39
3.33	MAX	1.06	39	4.49	2	0.00	39	0.00	39
	MIN	-0.17	4	-3.53	39	0.00	39	0.00	39
4.17	MAX	1.06	39	4.42	2	0.00	39	0.00	39
	MIN	-0.29	5	-4.42	39	0.00	39	0.00	39
5.00	MAX	1.06	39	3.95	2	0.00	39	0.00	39
	MIN	-0.58	5	-5.30	39	0.00	39	0.00	39
5.83	MAX	1.19	2	3.13	2	0.00	39	0.00	39
	MIN	-0.81	5	-6.18	39	0.00	39	0.00	39
6.67	MAX	1.54	2	1.99	2	0.00	39	0.00	39
	MIN	-1.01	5	-7.07	39	0.00	39	0.00	39
7.50	MAX	1.85	2	0.63	4	0.00	39	0.00	39
	MIN	-1.16	5	-7.95	39	0.00	39	0.00	39
8.33	MAX	2.11	2	0.95	5	0.00	39	0.00	39
	MIN	-1.27	5	-8.84	39	0.00	39	0.00	39
9.17	MAX	2.31	2	2.03	5	0.00	39	0.00	39
	MIN	-1.33	5	-9.72	39	0.00	39	0.00	39
10.00	MAX	2.47	2	3.16	5	0.00	39	0.00	39
	MIN	-1.36	5	-10.60	39	0.00	39	0.00	39

MAX/MIN FORCE VALUES FOR MEMB 2, AMONGST ALL SECT LOCATIONS

	FY/ FZ	DIST DIST	LD LD	MZ/ MY	DIST DIST	LD LD	FX	DIST	LD
MAX.	2.47	10.00	2	4.49	3.33	2			
	0.00	0.00	1	0.00	0.00	1	5.22 C	0.00	1
MIN.	-2.66	0.00	2	-10.60	10.00	39			
	0.00	10.00	39	0.00	10.00	39	0.00	10.00	5

3	0.00	MAX	6.68	18	9.91	39	0.00	39	0.00	39
		MIN	0.00	5	-4.06	5	0.00	39	0.00	39
	1.08	MAX	6.01	19	6.57	2	0.00	39	0.00	39
		MIN	-0.07	11	-4.06	5	0.00	39	0.00	39
	2.17	MAX	5.38	35	6.57	2	0.00	39	0.00	39
		MIN	-0.41	12	-8.59	34	0.00	39	0.00	39
	3.25	MAX	5.38	35	6.57	2	0.00	39	0.00	39
		MIN	-0.41	12	-11.60	35	0.00	39	0.00	39
	4.33	MAX	4.85	36	6.57	2	0.00	39	0.00	39
		MIN	-0.74	13	-16.24	35	0.00	39	0.00	39
	5.42	MAX	4.85	36	6.57	2	0.00	39	0.00	39
		MIN	-0.74	13	-18.64	36	0.00	39	0.00	39
	6.50	MAX	4.32	37	6.57	2	0.00	39	0.00	39
		MIN	-1.16	34	-22.12	36	0.00	39	0.00	39
	7.58	MAX	4.32	37	6.57	2	0.00	39	0.00	39
		MIN	-1.16	34	-23.91	37	0.00	39	0.00	39
	8.67	MAX	3.90	38	6.57	2	0.00	39	0.00	39
		MIN	-1.69	35	-26.23	37	0.00	39	0.00	39
	9.75	MAX	3.90	38	6.57	2	0.00	39	0.00	39
		MIN	-1.69	35	-28.49	38	0.00	39	0.00	39

	10.83	MAX	3.38	39	6.57	2	0.00	39	0.00	39
		MIN	-2.22	36	-29.77	38	0.00	39	0.00	39
	11.92	MAX	3.38	39	6.57	2	0.00	39	0.00	39
		MIN	-2.22	36	-30.35	39	0.00	39	0.00	39
	13.00	MAX	2.16	18	6.57	2	0.00	39	0.00	39
		MIN	-2.74	37	-30.58	38	0.00	39	0.00	39

MAX/MIN FORCE VALUES FOR MEMB 3, AMONGST ALL SECT LOCATIONS

	FY/ FZ	DIST DIST	LD LD	MZ/ MY	DIST DIST	LD LD	FX	DIST	LD
MAX.	6.68	0.00	18	9.91	0.00	39			
	0.00	0.00	1	0.00	0.00	1	2.47 C	0.00	2
MIN.	-2.74	13.00	37	-30.58	13.00	38			
	0.00	13.00	39	0.00	13.00	39	1.36 T	13.00	5

4	0.00	MAX	5.06	22	9.89	38	0.00	39	0.00	39
		MIN	0.00	5	-4.06	5	0.00	39	0.00	39
	1.08	MAX	5.06	22	6.57	2	0.00	39	0.00	39
		MIN	0.00	5	-4.06	5	0.00	39	0.00	39
	2.17	MAX	5.06	22	6.57	2	0.00	39	0.00	39
		MIN	0.00	5	-4.06	5	0.00	39	0.00	39
	3.25	MAX	5.06	22	6.57	2	0.00	39	0.00	39
		MIN	0.00	5	-7.57	22	0.00	39	0.00	39
	4.33	MAX	5.06	22	6.57	2	0.00	39	0.00	39
		MIN	0.00	5	-13.05	22	0.00	39	0.00	39
	5.42	MAX	4.38	21	6.57	2	0.00	39	0.00	39
		MIN	0.00	5	-15.88	22	0.00	39	0.00	39
	6.50	MAX	4.38	21	6.57	2	0.00	39	0.00	39
		MIN	0.00	5	-19.15	21	0.00	39	0.00	39
	7.58	MAX	3.71	20	6.57	2	0.00	39	0.00	39
		MIN	-0.14	21	-20.49	21	0.00	39	0.00	39
	8.67	MAX	3.71	20	6.57	2	0.00	39	0.00	39
		MIN	-0.14	21	-22.99	20	0.00	39	0.00	39
	9.75	MAX	3.69	39	6.57	2	0.00	39	0.00	39
		MIN	-0.81	20	-26.16	39	0.00	39	0.00	39
	10.83	MAX	3.16	38	6.57	2	0.00	39	0.00	39
		MIN	-1.49	19	-30.14	39	0.00	39	0.00	39
	11.92	MAX	3.16	38	6.57	2	0.00	39	0.00	39
		MIN	-1.49	19	-30.31	39	0.00	39	0.00	39
	13.00	MAX	2.74	37	6.57	2	0.00	39	0.00	39
		MIN	-2.16	18	-30.58	38	0.00	39	0.00	39

MAX/MIN FORCE VALUES FOR MEMB 4, AMONGST ALL SECT LOCATIONS

	FY/ FZ	DIST DIST	LD LD	MZ/ MY	DIST DIST	LD LD	FX	DIST	LD

MAX.	5.06	0.00	22	9.89	0.00	38			
	0.00	0.00	1	0.00	0.00	1	2.47 C	0.00	2
MIN.	-2.16	13.00	18	-30.58	13.00	38			
	0.00	13.00	39	0.00	13.00	39	1.36 T	13.00	5

********** END OF FORCE ENVELOPE FROM INTERNAL STORAGE **********

380. LOAD LIST 300 TO 311 400 TO 411 3000 TO 3008 4000 TO 4008
381. PRINT SUPPORT REACTION ALL

SUPPORT REACTIONS -UNIT KIP FEET STRUCTURE TYPE = SPACE

JOINT	LOAD	FORCE-X	FORCE-Y	FORCE-Z	MOM-X	MOM-Y	MOM Z
1	300	-2.48	10.50	0.00	0.00	0.00	0.00
	301	-2.30	10.16	0.00	0.00	0.00	0.00
	302	-2.14	9.83	0.00	0.00	0.00	0.00
	303	-2.02	9.49	0.00	0.00	0.00	0.00
	304	-1.93	9.15	0.00	0.00	0.00	0.00
	305	-1.87	8.82	0.00	0.00	0.00	0.00
	306	-1.84	8.48	0.00	0.00	0.00	0.00
	307	-1.79	12.73	0.00	0.00	0.00	0.00
	308	-1.62	12.06	0.00	0.00	0.00	0.00
	309	-1.52	11.38	0.00	0.00	0.00	0.00
	310	-1.48	10.71	0.00	0.00	0.00	0.00
	311	-1.49	10.04	0.00	0.00	0.00	0.00
	400	1.48	10.50	0.00	0.00	0.00	0.00
	401	1.67	10.16	0.00	0.00	0.00	0.00
	402	1.82	9.83	0.00	0.00	0.00	0.00
	403	1.94	9.49	0.00	0.00	0.00	0.00
	404	2.03	9.15	0.00	0.00	0.00	0.00
	405	2.10	8.82	0.00	0.00	0.00	0.00
	406	2.13	8.48	0.00	0.00	0.00	0.00
	407	2.17	12.73	0.00	0.00	0.00	0.00
	408	2.34	12.06	0.00	0.00	0.00	0.00
	409	2.44	11.38	0.00	0.00	0.00	0.00
	410	2.49	10.71	0.00	0.00	0.00	0.00
	411	2.47	10.04	0.00	0.00	0.00	0.00
	3000	-2.49	9.53	0.00	0.00	0.00	0.00
	3001	-2.35	9.26	0.00	0.00	0.00	0.00
	3002	-2.19	12.48	0.00	0.00	0.00	0.00
	3003	-1.95	11.95	0.00	0.00	0.00	0.00
	3004	-1.76	11.42	0.00	0.00	0.00	0.00
	3005	-1.62	10.90	0.00	0.00	0.00	0.00
	3006	-1.52	10.37	0.00	0.00	0.00	0.00
	3007	-1.47	9.95	0.00	0.00	0.00	0.00
	3008	-1.46	9.43	0.00	0.00	0.00	0.00
	4000	1.47	9.53	0.00	0.00	0.00	0.00
	4001	1.62	9.26	0.00	0.00	0.00	0.00
	4002	1.77	12.48	0.00	0.00	0.00	0.00
	4003	2.01	11.95	0.00	0.00	0.00	0.00
	4004	2.20	11.42	0.00	0.00	0.00	0.00
	4005	2.34	10.90	0.00	0.00	0.00	0.00
	4006	2.44	10.37	0.00	0.00	0.00	0.00
	4007	2.49	9.95	0.00	0.00	0.00	0.00
	4008	2.50	9.43	0.00	0.00	0.00	0.00
2	300	2.48	6.12	0.00	0.00	0.00	0.00
	301	2.30	6.46	0.00	0.00	0.00	0.00
	302	2.14	6.79	0.00	0.00	0.00	0.00
	303	2.02	7.13	0.00	0.00	0.00	0.00

SUPPORT REACTIONS -UNIT KIP FEET STRUCTURE TYPE = SPACE

JOINT	LOAD	FORCE-X	FORCE-Y	FORCE-Z	MOM-X	MOM-Y	MOM Z
	304	1.93	7.47	0.00	0.00	0.00	0.00
	305	1.87	7.80	0.00	0.00	0.00	0.00
	306	1.84	8.14	0.00	0.00	0.00	0.00
	307	1.79	8.41	0.00	0.00	0.00	0.00
	308	1.62	9.08	0.00	0.00	0.00	0.00
	309	1.52	9.76	0.00	0.00	0.00	0.00
	310	1.48	10.43	0.00	0.00	0.00	0.00
	311	1.49	11.10	0.00	0.00	0.00	0.00
	400	-1.48	6.12	0.00	0.00	0.00	0.00
	401	-1.67	6.46	0.00	0.00	0.00	0.00
	402	-1.82	6.79	0.00	0.00	0.00	0.00
	403	-1.94	7.13	0.00	0.00	0.00	0.00
	404	-2.03	7.47	0.00	0.00	0.00	0.00
	405	-2.10	7.80	0.00	0.00	0.00	0.00
	406	-2.13	8.14	0.00	0.00	0.00	0.00
	407	-2.17	8.41	0.00	0.00	0.00	0.00
	408	-2.34	9.08	0.00	0.00	0.00	0.00
	409	-2.44	9.76	0.00	0.00	0.00	0.00
	410	-2.49	10.43	0.00	0.00	0.00	0.00
	411	-2.47	11.10	0.00	0.00	0.00	0.00
	3000	2.49	6.10	0.00	0.00	0.00	0.00
	3001	2.35	6.37	0.00	0.00	0.00	0.00
	3002	2.19	6.68	0.00	0.00	0.00	0.00
	3003	1.95	7.21	0.00	0.00	0.00	0.00
	3004	1.76	7.74	0.00	0.00	0.00	0.00
	3005	1.62	8.26	0.00	0.00	0.00	0.00
	3006	1.52	8.79	0.00	0.00	0.00	0.00
	3007	1.47	9.21	0.00	0.00	0.00	0.00
	3008	1.46	9.73	0.00	0.00	0.00	0.00
	4000	-1.47	6.10	0.00	0.00	0.00	0.00
	4001	-1.62	6.37	0.00	0.00	0.00	0.00
	4002	-1.77	6.68	0.00	0.00	0.00	0.00
	4003	-2.01	7.21	0.00	0.00	0.00	0.00
	4004	-2.20	7.74	0.00	0.00	0.00	0.00
	4005	-2.34	8.26	0.00	0.00	0.00	0.00
	4006	-2.44	8.79	0.00	0.00	0.00	0.00
	4007	-2.49	9.21	0.00	0.00	0.00	0.00
	4008	-2.50	9.73	0.00	0.00	0.00	0.00

********** END OF LATEST ANALYSIS RESULT **********

```
382. ***LL
383. LOAD LIST 700 TO 711 7000 TO 7008
384. PRINT SUPPORT REACTION ALL
```

SUPPORT REACTIONS -UNIT KIP FEET STRUCTURE TYPE = SPACE

JOINT	LOAD	FORCE-X	FORCE-Y	FORCE-Z	MOM-X	MOM-Y	MOM Z
1	700	0.22	5.28	0.00	0.00	0.00	0.00
	701	0.40	4.95	0.00	0.00	0.00	0.00
	702	0.55	4.61	0.00	0.00	0.00	0.00
	703	0.68	4.27	0.00	0.00	0.00	0.00
	704	0.77	3.94	0.00	0.00	0.00	0.00
	705	0.83	3.60	0.00	0.00	0.00	0.00
	706	0.86	3.26	0.00	0.00	0.00	0.00
	707	0.91	7.52	0.00	0.00	0.00	0.00
	708	1.07	6.84	0.00	0.00	0.00	0.00
	709	1.18	6.17	0.00	0.00	0.00	0.00
	710	1.22	5.49	0.00	0.00	0.00	0.00
	711	1.20	4.82	0.00	0.00	0.00	0.00
	7000	0.21	4.31	0.00	0.00	0.00	0.00
	7001	0.35	4.05	0.00	0.00	0.00	0.00
	7002	0.50	7.26	0.00	0.00	0.00	0.00
	7003	0.74	6.73	0.00	0.00	0.00	0.00
	7004	0.93	6.21	0.00	0.00	0.00	0.00
	7005	1.08	5.68	0.00	0.00	0.00	0.00
	7006	1.17	5.15	0.00	0.00	0.00	0.00
	7007	1.22	4.74	0.00	0.00	0.00	0.00
	7008	1.23	4.21	0.00	0.00	0.00	0.00
2	700	-0.22	0.90	0.00	0.00	0.00	0.00
	701	-0.40	1.24	0.00	0.00	0.00	0.00
	702	-0.55	1.58	0.00	0.00	0.00	0.00
	703	-0.68	1.91	0.00	0.00	0.00	0.00
	704	-0.77	2.25	0.00	0.00	0.00	0.00
	705	-0.83	2.59	0.00	0.00	0.00	0.00
	706	-0.86	2.92	0.00	0.00	0.00	0.00
	707	-0.91	3.19	0.00	0.00	0.00	0.00
	708	-1.07	3.87	0.00	0.00	0.00	0.00
	709	-1.18	4.54	0.00	0.00	0.00	0.00
	710	-1.22	5.21	0.00	0.00	0.00	0.00
	711	-1.20	5.89	0.00	0.00	0.00	0.00
	7000	-0.21	0.89	0.00	0.00	0.00	0.00
	7001	-0.35	1.15	0.00	0.00	0.00	0.00
	7002	-0.50	1.47	0.00	0.00	0.00	0.00
	7003	-0.74	1.99	0.00	0.00	0.00	0.00
	7004	-0.93	2.52	0.00	0.00	0.00	0.00
	7005	-1.08	3.05	0.00	0.00	0.00	0.00
	7006	-1.17	3.57	0.00	0.00	0.00	0.00
	7007	-1.22	3.99	0.00	0.00	0.00	0.00
	7008	-1.23	4.52	0.00	0.00	0.00	0.00

********** END OF LATEST ANALYSIS RESULT **********

```
385. ***DL
386. LOAD LIST 800
387. PRINT SUPPORT REACTION ALL
```

SUPPORT REACTIONS -UNIT KIP FEET STRUCTURE TYPE = SPACE

JOINT	LOAD	FORCE-X	FORCE-Y	FORCE-Z	MOM-X	MOM-Y	MOM Z
1	800	-2.70	5.22	0.00	0.00	0.00	0.00
2	800	2.70	5.22	0.00	0.00	0.00	0.00

********** END OF LATEST ANALYSIS RESULT **********

```
388. *** BEAM DISPLACEMENTS AT CL FROM 1.0LL
389. LOAD LIST 600 TO 611 6000 TO 6008
390. PRINT JOINT DISPLACEMENTS LIST 4
```

JOINT DISPLACEMENT (INCH RADIANS) STRUCTURE TYPE = SPACE

JOINT	LOAD	X-TRANS	Y-TRANS	Z-TRANS	X-ROTAN	Y-ROTAN	Z-ROTAN
4	600	-0.02952	-0.00239	0.00000	0.00000	0.00000	0.00002
	601	-0.00784	-0.02619	0.00000	0.00000	0.00000	0.00011
	602	0.00450	-0.05092	0.00000	0.00000	0.00000	0.00018
	603	0.00903	-0.07462	0.00000	0.00000	0.00000	0.00022
	604	0.00733	-0.09532	0.00000	0.00000	0.00000	0.00023
	605	0.00095	-0.11106	0.00000	0.00000	0.00000	0.00019
	606	-0.00855	-0.11986	0.00000	0.00000	0.00000	0.00008
	607	-0.00978	-0.12631	0.00000	0.00000	0.00000	0.00001
	608	0.00048	-0.14475	0.00000	0.00000	0.00000	-0.00004
	609	0.00204	-0.15640	0.00000	0.00000	0.00000	-0.00004
	610	-0.00202	-0.16122	0.00000	0.00000	0.00000	-0.00001
	611	-0.00856	-0.15923	0.00000	0.00000	0.00000	0.00003
	6000	-0.03065	-0.00123	0.00000	0.00000	0.00000	0.00002
	6001	-0.01372	-0.01982	0.00000	0.00000	0.00000	0.00008
	6002	-0.00006	-0.04327	0.00000	0.00000	0.00000	0.00015
	6003	0.02042	-0.08037	0.00000	0.00000	0.00000	0.00026
	6004	0.02873	-0.11586	0.00000	0.00000	0.00000	0.00032
	6005	0.02729	-0.14666	0.00000	0.00000	0.00000	0.00032
	6006	0.01854	-0.16971	0.00000	0.00000	0.00000	0.00024
	6007	0.00857	-0.18290	0.00000	0.00000	0.00000	0.00013
	6008	-0.00777	-0.18560	0.00000	0.00000	0.00000	-0.00005

********** END OF LATEST ANALYSIS RESULT **********

```
391. *** SUPPORT DISPLACEMENTS FROM 1.0DL+1.0LL
392. LOAD LIST 500 TO 511 5000 TO 5008
393. PRINT JOINT DISPLACEMENTS LIST 2
```

JOINT DISPLACEMENT (INCH RADIANS) STRUCTURE TYPE = SPACE

JOINT	LOAD	X-TRANS	Y-TRANS	Z-TRANS	X-ROTAN	Y-ROTAN	Z-ROTAN
2	500	0.06286	0.00000	0.00000	0.00000	0.00000	-0.00049
	501	0.07390	0.00000	0.00000	0.00000	0.00000	-0.00069
	502	0.08311	0.00000	0.00000	0.00000	0.00000	-0.00082
	503	0.09047	0.00000	0.00000	0.00000	0.00000	-0.00088
	504	0.09599	0.00000	0.00000	0.00000	0.00000	-0.00089
	505	0.09968	0.00000	0.00000	0.00000	0.00000	-0.00085
	506	0.10152	0.00000	0.00000	0.00000	0.00000	-0.00078
	507	0.10423	0.00000	0.00000	0.00000	0.00000	-0.00078
	508	0.11420	0.00000	0.00000	0.00000	0.00000	-0.00090
	509	0.12048	0.00000	0.00000	0.00000	0.00000	-0.00093
	510	0.12309	0.00000	0.00000	0.00000	0.00000	-0.00091
	511	0.12201	0.00000	0.00000	0.00000	0.00000	-0.00085
	5000	0.06231	0.00000	0.00000	0.00000	0.00000	-0.00048
	5001	0.07094	0.00000	0.00000	0.00000	0.00000	-0.00064
	5002	0.08007	0.00000	0.00000	0.00000	0.00000	-0.00078
	5003	0.09445	0.00000	0.00000	0.00000	0.00000	-0.00098
	5004	0.10595	0.00000	0.00000	0.00000	0.00000	-0.00109
	5005	0.11458	0.00000	0.00000	0.00000	0.00000	-0.00111
	5006	0.12034	0.00000	0.00000	0.00000	0.00000	-0.00106
	5007	0.12339	0.00000	0.00000	0.00000	0.00000	-0.00099
	5008	0.12398	0.00000	0.00000	0.00000	0.00000	-0.00086

********** END OF LATEST ANALYSIS RESULT **********

394. LOAD LIST 300 TO 311 400 TO 411 3000 TO 3008 4000 TO 4008
395. PRINT MEMBER FORCES ALL

MEMBER END FORCES STRUCTURE TYPE = SPACE

ALL UNITS ARE -- KIP FEET (LOCAL)

MEMBER	LOAD	JT	AXIAL	SHEAR-Y	SHEAR-Z	TORSION	MOM-Y	MOM-Z
1	300	1	10.50	2.48	0.00	0.00	0.00	0.00
		3	-9.26	4.75	0.00	0.00	0.00	-17.18
	301	1	10.16	2.30	0.00	0.00	0.00	0.00
		3	-8.92	4.93	0.00	0.00	0.00	-19.02
	302	1	9.83	2.14	0.00	0.00	0.00	0.00
		3	-8.58	5.09	0.00	0.00	0.00	-20.55
	303	1	9.49	2.02	0.00	0.00	0.00	0.00
		3	-8.24	5.21	0.00	0.00	0.00	-21.78
	304	1	9.15	1.93	0.00	0.00	0.00	0.00
		3	-7.91	5.30	0.00	0.00	0.00	-22.70
	305	1	8.82	1.87	0.00	0.00	0.00	0.00
		3	-7.57	5.36	0.00	0.00	0.00	-23.32
	306	1	8.48	1.84	0.00	0.00	0.00	0.00
		3	-7.23	5.39	0.00	0.00	0.00	-23.62
	307	1	12.73	1.79	0.00	0.00	0.00	0.00
		3	-11.49	5.44	0.00	0.00	0.00	-24.08
	308	1	12.06	1.62	0.00	0.00	0.00	0.00
		3	-10.81	5.61	0.00	0.00	0.00	-25.74
	309	1	11.38	1.52	0.00	0.00	0.00	0.00
		3	-10.14	5.71	0.00	0.00	0.00	-26.78
	310	1	10.71	1.48	0.00	0.00	0.00	0.00
		3	-9.47	5.75	0.00	0.00	0.00	-27.22
	311	1	10.04	1.49	0.00	0.00	0.00	0.00
		3	-8.79	5.74	0.00	0.00	0.00	-27.04
	400	1	10.50	-1.48	0.00	0.00	0.00	0.00
		3	-9.26	0.93	0.00	0.00	0.00	-9.79
	401	1	10.16	-1.67	0.00	0.00	0.00	0.00
		3	-8.92	1.12	0.00	0.00	0.00	-11.63
	402	1	9.83	-1.82	0.00	0.00	0.00	0.00
		3	-8.58	1.27	0.00	0.00	0.00	-13.16
	403	1	9.49	-1.94	0.00	0.00	0.00	0.00
		3	-8.24	1.39	0.00	0.00	0.00	-14.39
	404	1	9.15	-2.03	0.00	0.00	0.00	0.00
		3	-7.91	1.48	0.00	0.00	0.00	-15.31
	405	1	8.82	-2.10	0.00	0.00	0.00	0.00
		3	-7.57	1.55	0.00	0.00	0.00	-15.92
	406	1	8.48	-2.13	0.00	0.00	0.00	0.00
		3	-7.23	1.58	0.00	0.00	0.00	-16.23
	407	1	12.73	-2.17	0.00	0.00	0.00	0.00
		3	-11.49	1.62	0.00	0.00	0.00	-16.68
	408	1	12.06	-2.34	0.00	0.00	0.00	0.00
		3	-10.81	1.79	0.00	0.00	0.00	-18.34

MEMBER END FORCES STRUCTURE TYPE = SPACE

ALL UNITS ARE -- KIP FEET (LOCAL)

MEMBER	LOAD	JT	AXIAL	SHEAR-Y	SHEAR-Z	TORSION	MOM-Y	MOM-Z
	409	1	11.38	-2.44	0.00	0.00	0.00	0.00
		3	-10.14	1.89	0.00	0.00	0.00	-19.39
	410	1	10.71	-2.49	0.00	0.00	0.00	0.00
		3	-9.47	1.94	0.00	0.00	0.00	-19.82
	411	1	10.04	-2.47	0.00	0.00	0.00	0.00
		3	-8.79	1.92	0.00	0.00	0.00	-19.64
	3000	1	9.53	2.49	0.00	0.00	0.00	0.00
		3	-8.28	4.74	0.00	0.00	0.00	-17.09
	3001	1	9.26	2.35	0.00	0.00	0.00	0.00
		3	-8.02	4.88	0.00	0.00	0.00	-18.53
	3002	1	12.48	2.19	0.00	0.00	0.00	0.00
		3	-11.23	5.04	0.00	0.00	0.00	-20.05
	3003	1	11.95	1.95	0.00	0.00	0.00	0.00
		3	-10.71	5.28	0.00	0.00	0.00	-22.45
	3004	1	11.42	1.76	0.00	0.00	0.00	0.00
		3	-10.18	5.47	0.00	0.00	0.00	-24.36
	3005	1	10.90	1.62	0.00	0.00	0.00	0.00
		3	-9.65	5.61	0.00	0.00	0.00	-25.80
	3006	1	10.37	1.52	0.00	0.00	0.00	0.00
		3	-9.13	5.71	0.00	0.00	0.00	-26.76
	3007	1	9.95	1.47	0.00	0.00	0.00	0.00
		3	-8.71	5.76	0.00	0.00	0.00	-27.27
	3008	1	9.43	1.46	0.00	0.00	0.00	0.00
		3	-8.18	5.77	0.00	0.00	0.00	-27.37
	4000	1	9.53	-1.47	0.00	0.00	0.00	0.00
		3	-8.28	0.92	0.00	0.00	0.00	-9.69
	4001	1	9.26	-1.62	0.00	0.00	0.00	0.00
		3	-8.02	1.07	0.00	0.00	0.00	-11.13
	4002	1	12.48	-1.77	0.00	0.00	0.00	0.00
		3	-11.23	1.22	0.00	0.00	0.00	-12.65
	4003	1	11.95	-2.01	0.00	0.00	0.00	0.00
		3	-10.71	1.46	0.00	0.00	0.00	-15.05
	4004	1	11.42	-2.20	0.00	0.00	0.00	0.00
		3	-10.18	1.65	0.00	0.00	0.00	-16.97
	4005	1	10.90	-2.34	0.00	0.00	0.00	0.00
		3	-9.65	1.79	0.00	0.00	0.00	-18.41
	4006	1	10.37	-2.44	0.00	0.00	0.00	0.00
		3	-9.13	1.89	0.00	0.00	0.00	-19.37
	4007	1	9.95	-2.49	0.00	0.00	0.00	0.00
		3	-8.71	1.94	0.00	0.00	0.00	-19.87
	4008	1	9.43	-2.50	0.00	0.00	0.00	0.00
		3	-8.18	1.95	0.00	0.00	0.00	-19.97
2	300	2	6.12	-2.48	0.00	0.00	0.00	0.00
		5	-4.87	-4.75	0.00	0.00	0.00	17.18

MEMBER END FORCES STRUCTURE TYPE = SPACE

ALL UNITS ARE -- KIP FEET (LOCAL)

MEMBER	LOAD	JT	AXIAL	SHEAR-Y	SHEAR-Z	TORSION	MOM-Y	MOM-Z
	301	2	6.46	-2.30	0.00	0.00	0.00	0.00
		5	-5.21	-4.93	0.00	0.00	0.00	19.02
	302	2	6.79	-2.14	0.00	0.00	0.00	0.00
		5	-5.55	-5.09	0.00	0.00	0.00	20.55
	303	2	7.13	-2.02	0.00	0.00	0.00	0.00
		5	-5.88	-5.21	0.00	0.00	0.00	21.78
	304	2	7.47	-1.93	0.00	0.00	0.00	0.00
		5	-6.22	-5.30	0.00	0.00	0.00	22.70
	305	2	7.80	-1.87	0.00	0.00	0.00	0.00
		5	-6.56	-5.36	0.00	0.00	0.00	23.32
	306	2	8.14	-1.84	0.00	0.00	0.00	0.00
		5	-6.90	-5.39	0.00	0.00	0.00	23.62
	307	2	8.41	-1.79	0.00	0.00	0.00	0.00
		5	-7.16	-5.44	0.00	0.00	0.00	24.08
	308	2	9.08	-1.62	0.00	0.00	0.00	0.00
		5	-7.84	-5.61	0.00	0.00	0.00	25.74
	309	2	9.76	-1.52	0.00	0.00	0.00	0.00
		5	-8.51	-5.71	0.00	0.00	0.00	26.78
	310	2	10.43	-1.48	0.00	0.00	0.00	0.00
		5	-9.19	-5.75	0.00	0.00	0.00	27.22
	311	2	11.10	-1.49	0.00	0.00	0.00	0.00
		5	-9.86	-5.74	0.00	0.00	0.00	27.04
	400	2	6.12	1.48	0.00	0.00	0.00	0.00
		5	-4.87	-0.93	0.00	0.00	0.00	9.79
	401	2	6.46	1.67	0.00	0.00	0.00	0.00
		5	-5.21	-1.12	0.00	0.00	0.00	11.63
	402	2	6.79	1.82	0.00	0.00	0.00	0.00
		5	-5.55	-1.27	0.00	0.00	0.00	13.16
	403	2	7.13	1.94	0.00	0.00	0.00	0.00
		5	-5.88	-1.39	0.00	0.00	0.00	14.39
	404	2	7.47	2.03	0.00	0.00	0.00	0.00
		5	-6.22	-1.48	0.00	0.00	0.00	15.31
	405	2	7.80	2.10	0.00	0.00	0.00	0.00
		5	-6.56	-1.55	0.00	0.00	0.00	15.92
	406	2	8.14	2.13	0.00	0.00	0.00	0.00
		5	-6.90	-1.58	0.00	0.00	0.00	16.23
	407	2	8.41	2.17	0.00	0.00	0.00	0.00
		5	-7.16	-1.62	0.00	0.00	0.00	16.68
	408	2	9.08	2.34	0.00	0.00	0.00	0.00
		5	-7.84	-1.79	0.00	0.00	0.00	18.34
	409	2	9.76	2.44	0.00	0.00	0.00	0.00
		5	-8.51	-1.89	0.00	0.00	0.00	19.39
	410	2	10.43	2.49	0.00	0.00	0.00	0.00
		5	-9.19	-1.94	0.00	0.00	0.00	19.82
	411	2	11.10	2.47	0.00	0.00	0.00	0.00
		5	-9.86	-1.92	0.00	0.00	0.00	19.64

MEMBER END FORCES STRUCTURE TYPE = SPACE

ALL UNITS ARE -- KIP FEET (LOCAL)

MEMBER	LOAD	JT	AXIAL	SHEAR-Y	SHEAR-Z	TORSION	MOM-Y	MOM-Z
	3000	2	6.10	-2.49	0.00	0.00	0.00	0.00
		5	-4.86	-4.74	0.00	0.00	0.00	17.09
	3001	2	6.37	-2.35	0.00	0.00	0.00	0.00
		5	-5.12	-4.88	0.00	0.00	0.00	18.53
	3002	2	6.68	-2.19	0.00	0.00	0.00	0.00
		5	-5.44	-5.04	0.00	0.00	0.00	20.05
	3003	2	7.21	-1.95	0.00	0.00	0.00	0.00
		5	-5.97	-5.28	0.00	0.00	0.00	22.45
	3004	2	7.74	-1.76	0.00	0.00	0.00	0.00
		5	-6.49	-5.47	0.00	0.00	0.00	24.36
	3005	2	8.26	-1.62	0.00	0.00	0.00	0.00
		5	-7.02	-5.61	0.00	0.00	0.00	25.80
	3006	2	8.79	-1.52	0.00	0.00	0.00	0.00
		5	-7.55	-5.71	0.00	0.00	0.00	26.76
	3007	2	9.21	-1.47	0.00	0.00	0.00	0.00
		5	-7.96	-5.76	0.00	0.00	0.00	27.27
	3008	2	9.73	-1.46	0.00	0.00	0.00	0.00
		5	-8.49	-5.77	0.00	0.00	0.00	27.37
	4000	2	6.10	1.47	0.00	0.00	0.00	0.00
		5	-4.86	-0.92	0.00	0.00	0.00	9.69
	4001	2	6.37	1.62	0.00	0.00	0.00	0.00
		5	-5.12	-1.07	0.00	0.00	0.00	11.13
	4002	2	6.68	1.77	0.00	0.00	0.00	0.00
		5	-5.44	-1.22	0.00	0.00	0.00	12.65
	4003	2	7.21	2.01	0.00	0.00	0.00	0.00
		5	-5.97	-1.46	0.00	0.00	0.00	15.05
	4004	2	7.74	2.20	0.00	0.00	0.00	0.00
		5	-6.49	-1.65	0.00	0.00	0.00	16.97
	4005	2	8.26	2.34	0.00	0.00	0.00	0.00
		5	-7.02	-1.79	0.00	0.00	0.00	18.41
	4006	2	8.79	2.44	0.00	0.00	0.00	0.00
		5	-7.55	-1.89	0.00	0.00	0.00	19.37
	4007	2	9.21	2.49	0.00	0.00	0.00	0.00
		5	-7.96	-1.94	0.00	0.00	0.00	19.87
	4008	2	9.73	2.50	0.00	0.00	0.00	0.00
		5	-8.49	-1.95	0.00	0.00	0.00	19.97
3	300	3	4.75	9.26	0.00	0.00	0.00	16.50
		4	-4.75	0.07	0.00	0.00	0.00	13.81
	301	3	4.93	8.92	0.00	0.00	0.00	18.61
		4	-4.93	0.41	0.00	0.00	0.00	16.37
	302	3	5.09	8.58	0.00	0.00	0.00	20.38
		4	-5.09	0.74	0.00	0.00	0.00	19.26
	303	3	5.21	8.24	0.00	0.00	0.00	21.83
		4	-5.21	1.08	0.00	0.00	0.00	22.47

MEMBER END FORCES STRUCTURE TYPE = SPACE

ALL UNITS ARE -- KIP FEET (LOCAL)

MEMBER	LOAD	JT	AXIAL	SHEAR-Y	SHEAR-Z	TORSION	MOM-Y	MOM-Z
	304	3	5.30	7.91	0.00	0.00	0.00	22.95
		4	-5.30	1.42	0.00	0.00	0.00	26.01
	305	3	5.36	7.57	0.00	0.00	0.00	23.75
		4	-5.36	1.76	0.00	0.00	0.00	29.88
	306	3	5.39	7.23	0.00	0.00	0.00	24.21
		4	-5.39	2.09	0.00	0.00	0.00	34.07
	307	3	5.44	11.49	0.00	0.00	0.00	22.93
		4	-5.44	-2.16	0.00	0.00	0.00	36.41
	308	3	5.61	10.81	0.00	0.00	0.00	24.98
		4	-5.61	-1.49	0.00	0.00	0.00	34.63
	309	3	5.71	10.14	0.00	0.00	0.00	26.38
		4	-5.71	-0.81	0.00	0.00	0.00	33.51
	310	3	5.75	9.47	0.00	0.00	0.00	27.12
		4	-5.75	-0.14	0.00	0.00	0.00	33.05
	311	3	5.74	8.79	0.00	0.00	0.00	27.21
		4	-5.74	0.53	0.00	0.00	0.00	33.24
	400	3	0.93	9.26	0.00	0.00	0.00	6.57
		4	-0.93	0.07	0.00	0.00	0.00	23.75
	401	3	1.12	8.92	0.00	0.00	0.00	8.67
		4	-1.12	0.41	0.00	0.00	0.00	26.31
	402	3	1.27	8.58	0.00	0.00	0.00	10.44
		4	-1.27	0.74	0.00	0.00	0.00	29.19
	403	3	1.39	8.24	0.00	0.00	0.00	11.89
		4	-1.39	1.08	0.00	0.00	0.00	32.41
	404	3	1.48	7.91	0.00	0.00	0.00	13.02
		4	-1.48	1.42	0.00	0.00	0.00	35.95
	405	3	1.55	7.57	0.00	0.00	0.00	13.81
		4	-1.55	1.76	0.00	0.00	0.00	39.81
	406	3	1.58	7.23	0.00	0.00	0.00	14.28
		4	-1.58	2.09	0.00	0.00	0.00	44.01
	407	3	1.62	11.49	0.00	0.00	0.00	12.99
		4	-1.62	-2.16	0.00	0.00	0.00	46.34
	408	3	1.79	10.81	0.00	0.00	0.00	15.04
		4	-1.79	-1.49	0.00	0.00	0.00	44.57
	409	3	1.89	10.14	0.00	0.00	0.00	16.44
		4	-1.89	-0.81	0.00	0.00	0.00	43.45
	410	3	1.94	9.47	0.00	0.00	0.00	17.19
		4	-1.94	-0.14	0.00	0.00	0.00	42.99
	411	3	1.92	8.79	0.00	0.00	0.00	17.27
		4	-1.92	0.53	0.00	0.00	0.00	43.18
	3000	3	4.74	8.28	0.00	0.00	0.00	16.81
		4	-4.74	0.05	0.00	0.00	0.00	13.70
	3001	3	4.88	8.02	0.00	0.00	0.00	18.45
		4	-4.88	0.32	0.00	0.00	0.00	15.70
	3002	3	5.04	11.23	0.00	0.00	0.00	18.74
		4	-5.04	0.64	0.00	0.00	0.00	18.34

MEMBER END FORCES STRUCTURE TYPE = SPACE

ALL UNITS ARE -- KIP FEET (LOCAL)

MEMBER	LOAD	JT	AXIAL	SHEAR-Y	SHEAR-Z	TORSION	MOM-Y	MOM-Z
	3003	3	5.28	10.71	0.00	0.00	0.00	21.52
		4	-5.28	1.16	0.00	0.00	0.00	22.85
	3004	3	5.47	10.18	0.00	0.00	0.00	23.78
		4	-5.47	1.69	0.00	0.00	0.00	27.87
	3005	3	5.61	9.65	0.00	0.00	0.00	25.53
		4	-5.61	2.22	0.00	0.00	0.00	33.40
	3006	3	5.71	9.13	0.00	0.00	0.00	26.77
		4	-5.71	2.74	0.00	0.00	0.00	39.44
	3007	3	5.76	8.71	0.00	0.00	0.00	27.49
		4	-5.76	-0.37	0.00	0.00	0.00	43.90
	3008	3	5.77	8.18	0.00	0.00	0.00	27.81
		4	-5.77	0.15	0.00	0.00	0.00	43.79
	4000	3	0.92	8.28	0.00	0.00	0.00	6.87
		4	-0.92	0.05	0.00	0.00	0.00	23.64
	4001	3	1.07	8.02	0.00	0.00	0.00	8.52
		4	-1.07	0.32	0.00	0.00	0.00	25.64
	4002	3	1.22	11.23	0.00	0.00	0.00	8.81
		4	-1.22	0.64	0.00	0.00	0.00	28.28
	4003	3	1.46	10.71	0.00	0.00	0.00	11.58
		4	-1.46	1.16	0.00	0.00	0.00	32.79
	4004	3	1.65	10.18	0.00	0.00	0.00	13.84
		4	-1.65	1.69	0.00	0.00	0.00	37.81
	4005	3	1.79	9.65	0.00	0.00	0.00	15.60
		4	-1.79	2.22	0.00	0.00	0.00	43.34
	4006	3	1.89	9.13	0.00	0.00	0.00	16.84
		4	-1.89	2.74	0.00	0.00	0.00	49.38
	4007	3	1.94	8.71	0.00	0.00	0.00	17.55
		4	-1.94	-0.37	0.00	0.00	0.00	53.83
	4008	3	1.95	8.18	0.00	0.00	0.00	17.88
		4	-1.95	0.15	0.00	0.00	0.00	53.73
4	300	5	4.75	4.87	0.00	0.00	0.00	18.32
		4	-4.75	-0.07	0.00	0.00	0.00	13.81
	301	5	4.93	5.21	0.00	0.00	0.00	20.14
		4	-4.93	-0.41	0.00	0.00	0.00	16.37
	302	5	5.09	5.55	0.00	0.00	0.00	21.64
		4	-5.09	-0.74	0.00	0.00	0.00	19.26
	303	5	5.21	5.88	0.00	0.00	0.00	22.81
		4	-5.21	-1.08	0.00	0.00	0.00	22.47
	304	5	5.30	6.22	0.00	0.00	0.00	23.65
		4	-5.30	-1.42	0.00	0.00	0.00	26.01
	305	5	5.36	6.56	0.00	0.00	0.00	24.17
		4	-5.36	-1.76	0.00	0.00	0.00	29.88
	306	5	5.39	6.90	0.00	0.00	0.00	24.35
		4	-5.39	-2.09	0.00	0.00	0.00	34.07

MEMBER END FORCES STRUCTURE TYPE = SPACE

ALL UNITS ARE -- KIP FEET (LOCAL)

MEMBER	LOAD	JT	AXIAL	SHEAR-Y	SHEAR-Z	TORSION	MOM-Y	MOM-Z
	307	5	5.44	7.16	0.00	0.00	0.00	24.73
		4	-5.44	2.16	0.00	0.00	0.00	36.41
	308	5	5.61	7.84	0.00	0.00	0.00	26.22
		4	-5.61	1.49	0.00	0.00	0.00	34.63
	309	5	5.71	8.51	0.00	0.00	0.00	27.06
		4	-5.71	0.81	0.00	0.00	0.00	33.51
	310	5	5.75	9.19	0.00	0.00	0.00	27.24
		4	-5.75	0.14	0.00	0.00	0.00	33.05
	311	5	5.74	9.86	0.00	0.00	0.00	26.77
		4	-5.74	-0.53	0.00	0.00	0.00	33.24
	400	5	0.93	4.87	0.00	0.00	0.00	8.38
		4	-0.93	-0.07	0.00	0.00	0.00	23.75
	401	5	1.12	5.21	0.00	0.00	0.00	10.21
		4	-1.12	-0.41	0.00	0.00	0.00	26.31
	402	5	1.27	5.55	0.00	0.00	0.00	11.70
		4	-1.27	-0.74	0.00	0.00	0.00	29.19
	403	5	1.39	5.88	0.00	0.00	0.00	12.87
		4	-1.39	-1.08	0.00	0.00	0.00	32.41
	404	5	1.48	6.22	0.00	0.00	0.00	13.71
		4	-1.48	-1.42	0.00	0.00	0.00	35.95
	405	5	1.55	6.56	0.00	0.00	0.00	14.23
		4	-1.55	-1.76	0.00	0.00	0.00	39.81
	406	5	1.58	6.90	0.00	0.00	0.00	14.42
		4	-1.58	-2.09	0.00	0.00	0.00	44.01
	407	5	1.62	7.16	0.00	0.00	0.00	14.79
		4	-1.62	2.16	0.00	0.00	0.00	46.34
	408	5	1.79	7.84	0.00	0.00	0.00	16.28
		4	-1.79	1.49	0.00	0.00	0.00	44.57
	409	5	1.89	8.51	0.00	0.00	0.00	17.12
		4	-1.89	0.81	0.00	0.00	0.00	43.45
	410	5	1.94	9.19	0.00	0.00	0.00	17.30
		4	-1.94	0.14	0.00	0.00	0.00	42.99
	411	5	1.92	9.86	0.00	0.00	0.00	16.83
		4	-1.92	-0.53	0.00	0.00	0.00	43.18
	3000	5	4.74	4.86	0.00	0.00	0.00	18.23
		4	-4.74	-0.05	0.00	0.00	0.00	13.70
	3001	5	4.88	5.12	0.00	0.00	0.00	19.65
		4	-4.88	-0.32	0.00	0.00	0.00	15.70
	3002	5	5.04	5.44	0.00	0.00	0.00	21.15
		4	-5.04	-0.64	0.00	0.00	0.00	18.34
	3003	5	5.28	5.97	0.00	0.00	0.00	23.48
		4	-5.28	-1.16	0.00	0.00	0.00	22.85
	3004	5	5.47	6.49	0.00	0.00	0.00	25.31
		4	-5.47	-1.69	0.00	0.00	0.00	27.87
	3005	5	5.61	7.02	0.00	0.00	0.00	26.63
		4	-5.61	-2.22	0.00	0.00	0.00	33.40

MEMBER END FORCES STRUCTURE TYPE = SPACE

ALL UNITS ARE -- KIP FEET (LOCAL)

MEMBER	LOAD	JT	AXIAL	SHEAR-Y	SHEAR-Z	TORSION	MOM-Y	MOM-Z
	3006	5	5.71	7.55	0.00	0.00	0.00	27.43
		4	-5.71	-2.74	0.00	0.00	0.00	39.44
	3007	5	5.76	7.96	0.00	0.00	0.00	27.80
		4	-5.76	0.37	0.00	0.00	0.00	43.90
	3008	5	5.77	8.49	0.00	0.00	0.00	27.69
		4	-5.77	-0.15	0.00	0.00	0.00	43.79
	4000	5	0.92	4.86	0.00	0.00	0.00	8.29
		4	-0.92	-0.05	0.00	0.00	0.00	23.64
	4001	5	1.07	5.12	0.00	0.00	0.00	9.72
		4	-1.07	-0.32	0.00	0.00	0.00	25.64
	4002	5	1.22	5.44	0.00	0.00	0.00	11.21
		4	-1.22	-0.64	0.00	0.00	0.00	28.28
	4003	5	1.46	5.97	0.00	0.00	0.00	13.55
		4	-1.46	-1.16	0.00	0.00	0.00	32.79
	4004	5	1.65	6.49	0.00	0.00	0.00	15.37
		4	-1.65	-1.69	0.00	0.00	0.00	37.81
	4005	5	1.79	7.02	0.00	0.00	0.00	16.69
		4	-1.79	-2.22	0.00	0.00	0.00	43.34
	4006	5	1.89	7.55	0.00	0.00	0.00	17.49
		4	-1.89	-2.74	0.00	0.00	0.00	49.38
	4007	5	1.94	7.96	0.00	0.00	0.00	17.86
		4	-1.94	0.37	0.00	0.00	0.00	53.83
	4008	5	1.95	8.49	0.00	0.00	0.00	17.75
		4	-1.95	-0.15	0.00	0.00	0.00	53.73

********** END OF LATEST ANALYSIS RESULT **********

```
396. ***
397. LOAD LIST 100 TO 111 200 TO 211 1000 TO 1008 2001 TO 2008
398. PRINT FORCE ENVELOPE NSECTION 4 ALL
```

MEMBER FORCE ENVELOPE

ALL UNITS ARE KIP FEET

MEMB	DISTANCE		FY	LD	MZ	LD	FZ	LD	MY	LD
1	0.00	MAX	3.63	1000	0.00	2008	0.00	2008	0.00	2008
		MIN	-3.72	2008	0.00	2008	0.00	2008	0.00	2008
	0.83	MAX	2.38	1000	3.04	2008	0.00	2008	0.00	2008
		MIN	-3.57	2008	-2.50	1000	0.00	2008	0.00	2008
	1.67	MAX	1.20	1000	5.95	2008	0.00	2008	0.00	2008
		MIN	-3.44	2008	-3.99	1000	0.00	2008	0.00	2008
	2.50	MAX	0.09	1000	8.77	2008	0.00	2008	0.00	2008
		MIN	-3.32	2008	-4.52	1000	0.00	2008	0.00	2008
	3.33	MAX	-0.96	1000	11.50	2008	0.00	2008	0.00	2008
		MIN	-3.23	2008	-4.16	1000	0.00	2008	0.00	2008
	4.17	MAX	-1.37	200	14.16	2008	0.00	2008	0.00	2008
		MIN	-3.74	1008	-2.95	1000	0.00	2008	0.00	2008
	5.00	MAX	-1.32	200	16.76	2008	0.00	2008	0.00	2008
		MIN	-4.65	1008	-0.95	1000	0.00	2008	0.00	2008
	5.83	MAX	-1.28	200	19.33	2008	0.00	2008	0.00	2008
		MIN	-5.50	1008	1.79	1000	0.00	2008	0.00	2008
	6.67	MAX	-1.26	200	21.87	2008	0.00	2008	0.00	2008
		MIN	-6.29	1008	5.21	1000	0.00	2008	0.00	2008
	7.50	MAX	-1.26	200	24.41	2008	0.00	2008	0.00	2008
		MIN	-7.01	1008	9.26	1000	0.00	2008	0.00	2008
	8.33	MAX	-1.28	200	28.87	1008	0.00	2008	0.00	2008
		MIN	-7.66	1008	12.10	200	0.00	2008	0.00	2008
	9.17	MAX	-1.32	200	35.50	1008	0.00	2008	0.00	2008
		MIN	-8.25	1008	13.19	200	0.00	2008	0.00	2008
	10.00	MAX	-1.38	200	42.60	1008	0.00	2008	0.00	2008
		MIN	-8.77	1008	14.31	200	0.00	2008	0.00	2008

MAX/MIN FORCE VALUES FOR MEMB 1, AMONGST ALL SECT LOCATIONS

	FY/ FZ	DIST DIST	LD LD	MZ/ MY	DIST DIST	LD LD	FX	DIST	LD
MAX.	3.63	0.00	1000	42.60	10.00	1008			
	0.00	0.00	100	0.00	0.00	100	20.20 C	0.00	107
MIN.	-8.77	10.00	1008	-4.52	2.50	1000			
	0.00	10.00	2008	0.00	10.00	2008	11.07 C	10.00	206

2	0.00	MAX	3.72	2008	0.00	2008	0.00	2008	0.00	2008
		MIN	-3.63	1000	0.00	2008	0.00	2008	0.00	2008
	0.83	MAX	3.57	2008	2.50	1000	0.00	2008	0.00	2008
		MIN	-2.38	1000	-3.04	2008	0.00	2008	0.00	2008

1.67	MAX	3.44	2008	3.99	1000	0.00	2008	0.00	2008
	MIN	-1.20	1000	-5.95	2008	0.00	2008	0.00	2008
2.50	MAX	3.32	2008	4.52	1000	0.00	2008	0.00	2008
	MIN	-0.09	1000	-8.77	2008	0.00	2008	0.00	2008
3.33	MAX	3.23	2008	4.16	1000	0.00	2008	0.00	2008
	MIN	0.96	1000	-11.50	2008	0.00	2008	0.00	2008
4.17	MAX	3.74	1008	2.95	1000	0.00	2008	0.00	2008
	MIN	1.37	200	-14.16	2008	0.00	2008	0.00	2008
5.00	MAX	4.65	1008	0.95	1000	0.00	2008	0.00	2008
	MIN	1.32	200	-16.76	2008	0.00	2008	0.00	2008
5.83	MAX	5.50	1008	-1.79	1000	0.00	2008	0.00	2008
	MIN	1.28	200	-19.33	2008	0.00	2008	0.00	2008
6.67	MAX	6.29	1008	-5.21	1000	0.00	2008	0.00	2008
	MIN	1.26	200	-21.87	2008	0.00	2008	0.00	2008
7.50	MAX	7.01	1008	-9.26	1000	0.00	2008	0.00	2008
	MIN	1.26	200	-24.41	2008	0.00	2008	0.00	2008
8.33	MAX	7.66	1008	-12.10	200	0.00	2008	0.00	2008
	MIN	1.28	200	-28.87	1008	0.00	2008	0.00	2008
9.17	MAX	8.25	1008	-13.19	200	0.00	2008	0.00	2008
	MIN	1.32	200	-35.50	1008	0.00	2008	0.00	2008
10.00	MAX	8.77	1008	-14.31	200	0.00	2008	0.00	2008
	MIN	1.38	200	-42.60	1008	0.00	2008	0.00	2008

MAX/MIN FORCE VALUES FOR MEMB 2, AMONGST ALL SECT LOCATIONS

	FY/ FZ	DIST DIST	LD LD	MZ/ MY	DIST DIST	LD LD	FX	DIST	LD
MAX.	8.77	10.00	1008	4.52	2.50	1000			
	0.00	0.00	100	0.00	0.00	100	17.35 C	0.00	111
MIN.	-3.63	0.00	1000	-42.60	10.00	1008			
	0.00	10.00	2008	0.00	10.00	2008	6.91 C	10.00	1000

3	0.00	MAX	18.51	207	43.16	1008	0.00	2008	0.00	2008
		MIN	11.07	206	9.17	200	0.00	2008	0.00	2008
	1.08	MAX	16.77	208	29.68	1008	0.00	2008	0.00	2008
		MIN	6.13	200	-2.03	201	0.00	2008	0.00	2008
	2.17	MAX	15.09	2004	16.81	1008	0.00	2008	0.00	2008
		MIN	4.97	201	-16.94	2003	0.00	2008	0.00	2008
	3.25	MAX	14.52	2004	4.82	1000	0.00	2008	0.00	2008
		MIN	4.40	201	-28.05	2004	0.00	2008	0.00	2008
	4.33	MAX	13.03	2005	-0.31	1000	0.00	2008	0.00	2008
		MIN	3.24	202	-41.41	2004	0.00	2008	0.00	2008
	5.42	MAX	12.46	2005	-4.82	1000	0.00	2008	0.00	2008
		MIN	2.67	202	-50.22	2005	0.00	2008	0.00	2008
	6.50	MAX	10.97	2006	-8.72	1000	0.00	2008	0.00	2008
		MIN	1.37	2003	-60.32	2005	0.00	2008	0.00	2008
	7.58	MAX	10.40	2006	-12.00	1000	0.00	2008	0.00	2008
		MIN	0.81	2003	-66.83	2006	0.00	2008	0.00	2008
	8.67	MAX	9.11	2007	-14.67	1000	0.00	2008	0.00	2008
		MIN	-0.68	2004	-73.67	2006	0.00	2008	0.00	2008
	9.75	MAX	8.54	2007	-16.72	1000	0.00	2008	0.00	2008
		MIN	-1.25	2004	-79.77	2007	0.00	2008	0.00	2008

	10.83	MAX	7.05	2008	-18.15	1000	0.00	2008	0.00 2008
		MIN	-2.74	2005	-83.56	2007	0.00	2008	0.00 2008
	11.92	MAX	6.48	2008	-18.97	1000	0.00	2008	0.00 2008
		MIN	-3.31	2005	-85.49	2008	0.00	2008	0.00 2008
	13.00	MAX	3.78	207	-19.18	1000	0.00	2008	0.00 2008
		MIN	-4.80	2006	-86.20	2007	0.00	2008	0.00 2008

MAX/MIN FORCE VALUES FOR MEMB 3, AMONGST ALL SECT LOCATIONS

	FY/ FZ	DIST DIST	LD LD	MZ/ MY	DIST DIST	LD LD	FX	DIST	LD
MAX.	18.51	0.00	107	43.16	0.00	1008			
	0.00	0.00	100	0.00	0.00	100	8.77 C	0.00	1008
MIN.	-4.80	13.00	2006	-86.20	13.00	2007			
	0.00	13.00	2008	0.00	13.00	2008	1.38 C	13.00	200

4	0.00	MAX	15.67	211	43.13	1007	0.00	2008	0.00 2008
		MIN	6.91	1000	12.35	200	0.00	2008	0.00 2008
	1.08	MAX	15.10	211	30.21	1006	0.00	2008	0.00 2008
		MIN	6.35	1000	5.14	200	0.00	2008	0.00 2008
	2.17	MAX	14.53	211	19.14	1005	0.00	2008	0.00 2008
		MIN	5.78	1000	-5.58	211	0.00	2008	0.00 2008
	3.25	MAX	13.96	211	9.78	1004	0.00	2008	0.00 2008
		MIN	5.21	1000	-21.01	211	0.00	2008	0.00 2008
	4.33	MAX	13.39	211	2.14	1003	0.00	2008	0.00 2008
		MIN	4.64	1000	-35.83	211	0.00	2008	0.00 2008
	5.42	MAX	11.65	210	-3.36	100	0.00	2008	0.00 2008
		MIN	4.07	1000	-45.39	211	0.00	2008	0.00 2008
	6.50	MAX	11.08	210	-7.47	1000	0.00	2008	0.00 2008
		MIN	3.50	1000	-55.12	210	0.00	2008	0.00 2008
	7.58	MAX	9.33	209	-10.96	1000	0.00	2008	0.00 2008
		MIN	2.60	210	-60.86	210	0.00	2008	0.00 2008
	8.67	MAX	8.76	209	-13.84	1000	0.00	2008	0.00 2008
		MIN	2.03	210	-67.99	209	0.00	2008	0.00 2008
	9.75	MAX	8.15	2008	-16.09	1000	0.00	2008	0.00 2008
		MIN	0.28	209	-75.70	2008	0.00	2008	0.00 2008
	10.83	MAX	6.67	2007	-17.74	1000	0.00	2008	0.00 2008
		MIN	-1.47	208	-84.20	2008	0.00	2008	0.00 2008
	11.92	MAX	6.10	2007	-18.76	1000	0.00	2008	0.00 2008
		MIN	-2.04	208	-85.42	2008	0.00	2008	0.00 2008
	13.00	MAX	4.80	2006	-19.18	1000	0.00	2008	0.00 2008
		MIN	-3.78	207	-86.20	2007	0.00	2008	0.00 2008

MAX/MIN FORCE VALUES FOR MEMB 4, AMONGST ALL SECT LOCATIONS

FY/ FZ	DIST DIST	LD LD	MZ/ MY	DIST DIST	LD LD	FX	DIST	LD

```
| MAX.      15.67   0.00  111      43.13   0.00 1007
|            0.00   0.00  100       0.00   0.00  100      8.77 C   0.00 1008
| MIN.      -3.78  13.00  207     -86.20  13.00 2007
|            0.00  13.00 2008       0.00  13.00 2008      1.38 C  13.00  200
|-----------------------------------------------------------------------------
```

********** END OF FORCE ENVELOPE FROM INTERNAL STORAGE **********

```
399. LOAD LIST 300 TO 311 400 TO 411 3000 TO 3008 4000 TO 4008
400. PRINT FORCE ENVELOPE NSECTION 4 ALL
```

MEMBER FORCE ENVELOPE

ALL UNITS ARE KIP FEET

MEMB	DISTANCE		FY	LD	MZ	LD	FZ	LD	MY	LD
1	0.00	MAX	2.49	3000	0.00	4008	0.00	4008	0.00	4008
		MIN	-2.50	4008	0.00	4008	0.00	4008	0.00	4008
	0.83	MAX	1.62	3000	2.02	4008	0.00	4008	0.00	4008
		MIN	-2.35	4008	-1.71	3000	0.00	4008	0.00	4008
	1.67	MAX	0.80	3000	3.92	4008	0.00	4008	0.00	4008
		MIN	-2.22	4008	-2.71	3000	0.00	4008	0.00	4008
	2.50	MAX	0.03	3000	5.72	4008	0.00	4008	0.00	4008
		MIN	-2.11	4008	-3.05	3000	0.00	4008	0.00	4008
	3.33	MAX	-0.70	3000	7.44	4008	0.00	4008	0.00	4008
		MIN	-2.01	4008	-2.77	3000	0.00	4008	0.00	4008
	4.17	MAX	-0.91	4000	9.08	4008	0.00	4008	0.00	4008
		MIN	-2.40	3008	-1.90	3000	0.00	4008	0.00	4008
	5.00	MAX	-0.86	4000	10.67	4008	0.00	4008	0.00	4008
		MIN	-3.03	3008	-0.49	3000	0.00	4008	0.00	4008
	5.83	MAX	-0.82	4000	12.23	4008	0.00	4008	0.00	4008
		MIN	-3.61	3008	1.42	3000	0.00	4008	0.00	4008
	6.67	MAX	-0.80	4000	13.76	4008	0.00	4008	0.00	4008
		MIN	-4.14	3008	3.79	3000	0.00	4008	0.00	4008
	7.50	MAX	-0.80	4000	15.28	4008	0.00	4008	0.00	4008
		MIN	-4.62	3008	6.59	3000	0.00	4008	0.00	4008
	8.33	MAX	-0.82	4000	18.33	3008	0.00	4008	0.00	4008
		MIN	-5.05	3008	8.25	4000	0.00	4008	0.00	4008
	9.17	MAX	-0.86	4000	22.70	3008	0.00	4008	0.00	4008
		MIN	-5.43	3008	8.95	4000	0.00	4008	0.00	4008
	10.00	MAX	-0.92	4000	27.37	3008	0.00	4008	0.00	4008
		MIN	-5.77	3008	9.69	4000	0.00	4008	0.00	4008

MAX/MIN FORCE VALUES FOR MEMB 1, AMONGST ALL SECT LOCATIONS

	FY/ FZ	DIST DIST	LD LD	MZ/ MY	DIST DIST	LD LD	FX	DIST	LD
MAX.	2.49	0.00	3000	27.37	10.00	3008			
	0.00	0.00	300	0.00	0.00	300	12.73 C	0.00	307
MIN.	-5.77	10.00	3008	-3.05	2.50	3000			
	0.00	10.00	4008	0.00	10.00	4008	7.23 C	10.00	306

2	0.00	MAX	2.50	4008	0.00	4008	0.00	4008	0.00	4008
		MIN	-2.49	3000	0.00	4008	0.00	4008	0.00	4008
	0.83	MAX	2.35	4008	1.71	3000	0.00	4008	0.00	4008
		MIN	-1.62	3000	-2.02	4008	0.00	4008	0.00	4008

	1.67	MAX	2.22	4008	2.71	3000	0.00	4008	0.00	4008
		MIN	-0.80	3000	-3.92	4008	0.00	4008	0.00	4008
	2.50	MAX	2.11	4008	3.05	3000	0.00	4008	0.00	4008
		MIN	-0.03	3000	-5.72	4008	0.00	4008	0.00	4008
	3.33	MAX	2.01	4008	2.77	3000	0.00	4008	0.00	4008
		MIN	0.70	3000	-7.44	4008	0.00	4008	0.00	4008
	4.17	MAX	2.40	3008	1.90	3000	0.00	4008	0.00	4008
		MIN	0.91	4000	-9.08	4008	0.00	4008	0.00	4008
	5.00	MAX	3.03	3008	0.49	3000	0.00	4008	0.00	4008
		MIN	0.86	4000	-10.67	4008	0.00	4008	0.00	4008
	5.83	MAX	3.61	3008	-1.42	3000	0.00	4008	0.00	4008
		MIN	0.82	4000	-12.23	4008	0.00	4008	0.00	4008
	6.67	MAX	4.14	3008	-3.79	3000	0.00	4008	0.00	4008
		MIN	0.80	4000	-13.76	4008	0.00	4008	0.00	4008
	7.50	MAX	4.62	3008	-6.59	3000	0.00	4008	0.00	4008
		MIN	0.80	4000	-15.28	4008	0.00	4008	0.00	4008
	8.33	MAX	5.05	3008	-8.25	4000	0.00	4008	0.00	4008
		MIN	0.82	4000	-18.33	3008	0.00	4008	0.00	4008
	9.17	MAX	5.43	3008	-8.95	4000	0.00	4008	0.00	4008
		MIN	0.86	4000	-22.70	3008	0.00	4008	0.00	4008
	10.00	MAX	5.77	3008	-9.69	4000	0.00	4008	0.00	4008
		MIN	0.92	4000	-27.37	3008	0.00	4008	0.00	4008

MAX/MIN FORCE VALUES FOR MEMB 2, AMONGST ALL SECT LOCATIONS

	FY/ FZ	DIST DIST	LD LD	MZ/ MY	DIST DIST	LD LD	FX	DIST	LD
MAX.	5.77	10.00	3008	3.05	2.50	3000			
	0.00	0.00	300	0.00	0.00	300	11.10 C	0.00	311
MIN.	-2.49	0.00	3000	-27.37	10.00	3008			
	0.00	10.00	4008	0.00	10.00	4008	4.86 C	10.00	3000

3	0.00	MAX	11.49	407	27.81	3008	0.00	4008	0.00	4008
		MIN	7.23	306	6.57	400	0.00	4008	0.00	4008
	1.08	MAX	10.41	408	19.17	3008	0.00	4008	0.00	4008
		MIN	4.33	400	-0.78	401	0.00	4008	0.00	4008
	2.17	MAX	9.38	4004	10.96	3008	0.00	4008	0.00	4008
		MIN	3.60	401	-10.16	4003	0.00	4008	0.00	4008
	3.25	MAX	8.98	3004	3.32	3000	0.00	4008	0.00	4008
		MIN	3.20	401	-17.29	4004	0.00	4008	0.00	4008
	4.33	MAX	8.05	4005	-0.30	3000	0.00	4008	0.00	4008
		MIN	2.46	402	-25.62	4004	0.00	4008	0.00	4008
	5.42	MAX	7.65	4005	-3.50	3000	0.00	4008	0.00	4008
		MIN	2.06	402	-31.26	4005	0.00	4008	0.00	4008
	6.50	MAX	6.72	4006	-6.26	3000	0.00	4008	0.00	4008
		MIN	1.24	4003	-37.57	4005	0.00	4008	0.00	4008
	7.58	MAX	6.32	4006	-8.58	3000	0.00	4008	0.00	4008
		MIN	0.84	4003	-41.74	4006	0.00	4008	0.00	4008
	8.67	MAX	5.51	4007	-10.47	3000	0.00	4008	0.00	4008
		MIN	-0.09	4004	-46.02	4006	0.00	4008	0.00	4008
	9.75	MAX	5.11	4007	-11.93	3000	0.00	4008	0.00	4008
		MIN	-0.49	3004	-49.79	4007	0.00	4008	0.00	4008

10.83	MAX	4.18	4008	-12.96	3000	0.00	4008	0.00	4008
	MIN	-1.41	3005	-52.16	4007	0.00	4008	0.00	4008
11.92	MAX	3.78	3008	-13.55	3000	0.00	4008	0.00	4008
	MIN	-1.82	3005	-53.38	4008	0.00	4008	0.00	4008
13.00	MAX	2.16	407	-13.70	3000	0.00	4008	0.00	4008
	MIN	-2.74	4006	-53.83	4007	0.00	4008	0.00	4008

MAX/MIN FORCE VALUES FOR MEMB 3, AMONGST ALL SECT LOCATIONS

	FY/ FZ	DIST DIST	LD LD	MZ/ MY	DIST DIST	LD LD	FX	DIST	LD
MAX.	11.49	0.00	307	27.81	0.00	3008			
	0.00	0.00	300	0.00	0.00	300	5.77 C	0.00	3008
MIN.	-2.74	13.00	4006	-53.83	13.00	4007			
	0.00	13.00	4008	0.00	13.00	4008	0.92 C	13.00	4000

4	0.00	MAX	9.86	311	27.80	3007	0.00	4008	0.00	4008
		MIN	4.86	3000	8.29	4000	0.00	4008	0.00	4008
	1.08	MAX	9.46	411	19.47	3006	0.00	4008	0.00	4008
		MIN	4.46	4000	3.25	4000	0.00	4008	0.00	4008
	2.17	MAX	9.06	411	12.29	3005	0.00	4008	0.00	4008
		MIN	4.06	4000	-3.67	411	0.00	4008	0.00	4008
	3.25	MAX	8.66	411	6.16	3004	0.00	4008	0.00	4008
		MIN	3.66	4000	-13.26	411	0.00	4008	0.00	4008
	4.33	MAX	8.26	411	1.10	3003	0.00	4008	0.00	4008
		MIN	3.26	4000	-22.43	411	0.00	4008	0.00	4008
	5.42	MAX	7.18	410	-2.66	300	0.00	4008	0.00	4008
		MIN	2.86	4000	-28.50	411	0.00	4008	0.00	4008
	6.50	MAX	6.78	410	-5.54	3000	0.00	4008	0.00	4008
		MIN	2.46	4000	-34.60	410	0.00	4008	0.00	4008
	7.58	MAX	5.71	409	-7.99	3000	0.00	4008	0.00	4008
		MIN	1.86	410	-38.33	410	0.00	4008	0.00	4008
	8.67	MAX	5.31	409	-10.00	3000	0.00	4008	0.00	4008
		MIN	1.46	410	-42.77	409	0.00	4008	0.00	4008
	9.75	MAX	4.89	4008	-11.58	3000	0.00	4008	0.00	4008
		MIN	0.39	409	-47.46	4008	0.00	4008	0.00	4008
	10.83	MAX	3.96	4007	-12.72	3000	0.00	4008	0.00	4008
		MIN	-0.69	308	-52.53	4008	0.00	4008	0.00	4008
	11.92	MAX	3.56	4007	-13.43	3000	0.00	4008	0.00	4008
		MIN	-1.09	308	-53.34	4008	0.00	4008	0.00	4008
	13.00	MAX	2.74	4006	-13.70	3000	0.00	4008	0.00	4008
		MIN	-2.16	407	-53.83	4007	0.00	4008	0.00	4008

MAX/MIN FORCE VALUES FOR MEMB 4, AMONGST ALL SECT LOCATIONS

FY/ FZ	DIST DIST	LD LD	MZ/ MY	DIST DIST	LD LD	FX	DIST	LD

```
| MAX.      9.86   0.00  311      27.80   0.00 3007
|           0.00   0.00  300       0.00   0.00  300      5.77 C   0.00 3008
| MIN.     -2.16  13.00  407     -53.83  13.00 4007
|           0.00  13.00 4008       0.00  13.00 4008      0.92 C  13.00 4000
|-----------------------------------------------------------------------------
```

********** END OF FORCE ENVELOPE FROM INTERNAL STORAGE **********

401. FINISH

********** END OF THE STAAD.Pro RUN **********

**** DATE= APR 1,2015 TIME= 9:55:17 ****

```
*************************************************************
*   For technical assistance on STAAD.Pro, please visit     *
*   http://selectservices.bentley.com/en-US/                *
*                                                           *
*   Details about additional assistance from                *
*   Bentley and Partners can be found at program menu       *
*   Help->Technical Support                                 *
*                                                           *
*      Copyright (c) 1997-2014 Bentley Systems, Inc.
*                http://www.bentley.com                     *
*************************************************************
```

Software licensed to	Job No	Sheet No 1	Rev
	Part		
Job Title	Ref		
	By BK	Date 03/16/15	Chd
Client	File 26x10-HL93-Spring.std	Date/Time 16-Mar-2015 14:00	

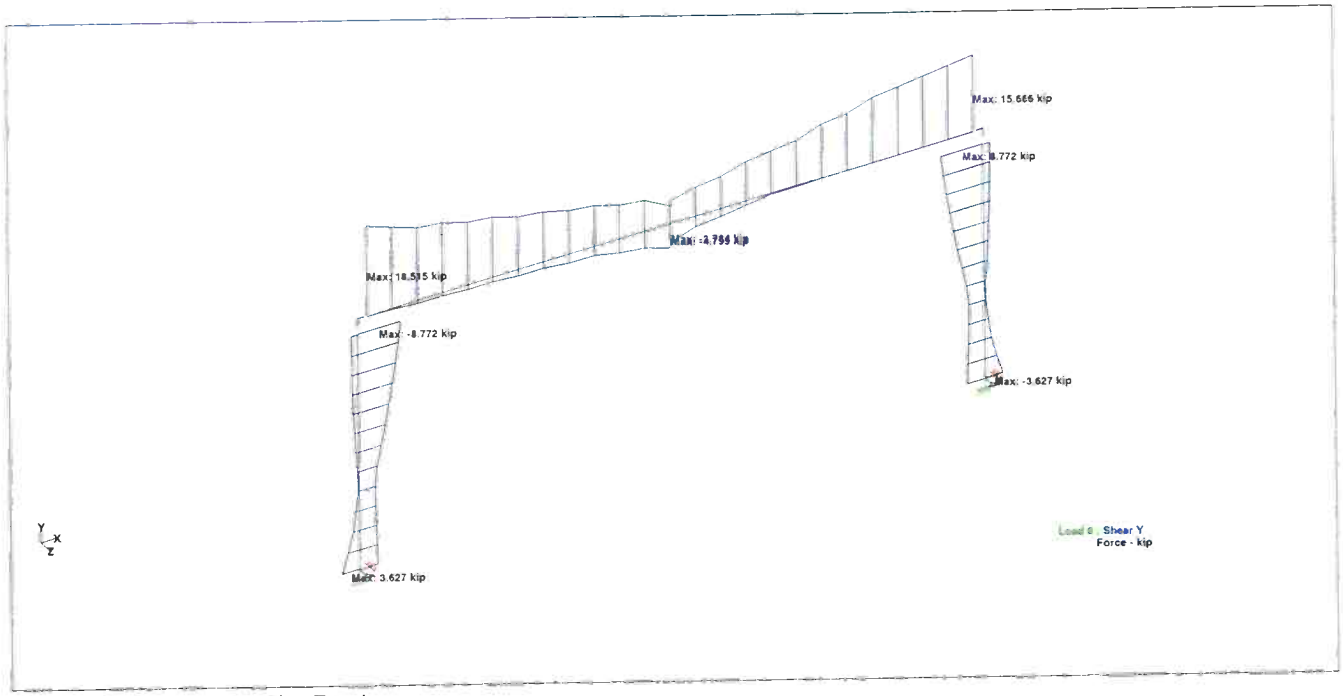

Whole Structure Fy 4.8kip:1ft 0 Envelope

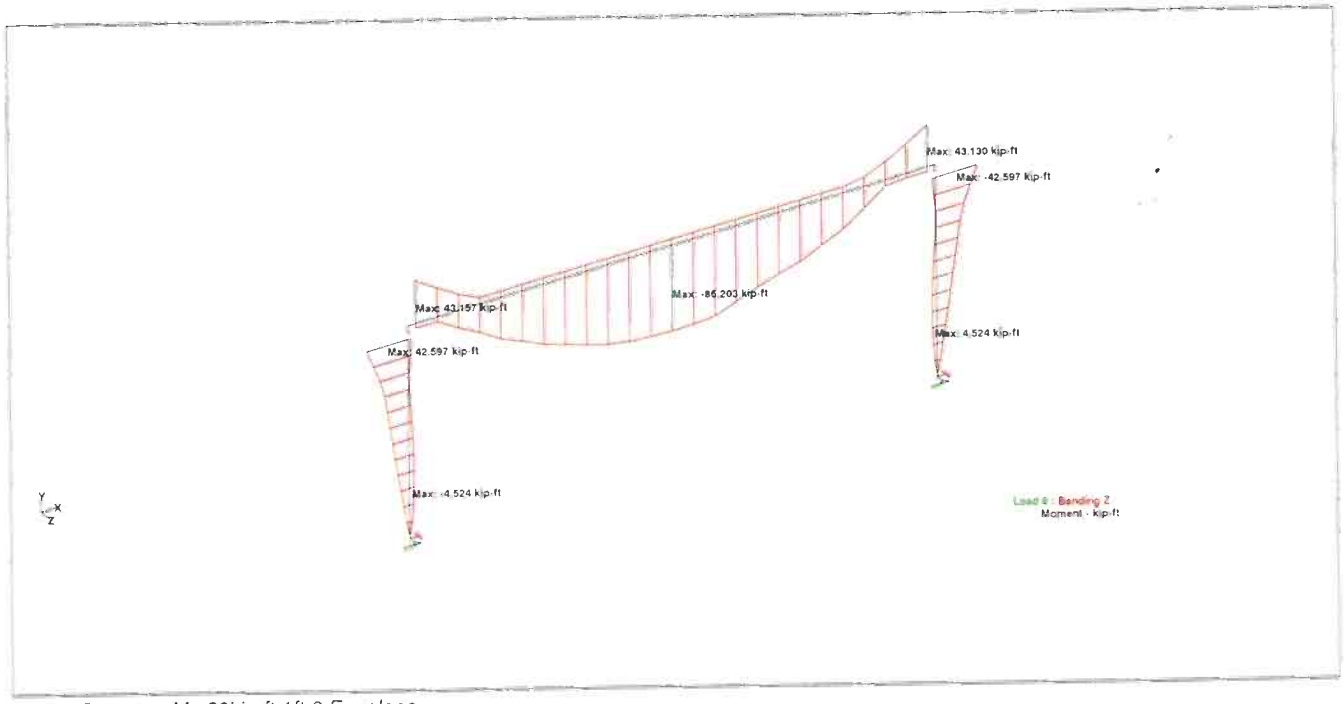

Whole Structure Mz 20kip-ft:1ft 0 Envelope

Section 5
Mathcad Calculations
Pedestal and Footing

PEDESTAL AND FOOTING DESIGN
DESIGN INPUT DATA

PEDESTAL DESIGN

$V_d := 5200lbf$ **Dead Load Vertical Reaction**

REFERENCES:
1. AASHTO
2. Attachment "A" StaadPro computer analysis

$V_l := 7520lbf$ **Live Load Vertical Reaction**

$H := 0lbf$ **Horizontal Reaction**

DESIGN PARAMETERS:

$\gamma_w := 62.4\frac{lbf}{ft^3}$ unit weight of water

$\gamma_c := 150\frac{lbf}{ft^3}$ unit weight of concrete

$\gamma_e := 140\frac{lbf}{ft^3}$ unit weight of earth

$f_c := 5000psi$ $f_y := 60000psi$

$K_{max} := .5$ max. earth pressure coefficient

$K_{min} := .25$ min. earth pressure coefficient

GEOMETRY:

$P_h := 3.0ft$ Pedestal height

$ClearRise := 10ft$

$C := 1.0ft$ Earth cover

$t_t := 16in$ top slab thickness

$P_t := 2.5ft$ pedestal thickness

LATERAL LOADS:

Lateral Earth Pressure:

$H1 := C + t_t + ClearRise$ $H1 = 12.333\,ft$ soil depth at top of pedestal

$H2 := H1 + P_h$ $H2 = 15.333\,ft$ soil depth at bottom of pedestal

$LEPMIN := K_{min}\cdot\gamma_e\cdot 1ft$ $LEPMIN = 35\cdot\frac{lbf}{ft^2}$

$LEPMAX := K_{max}\cdot\gamma_e\cdot 1ft$ $LEPMAX = 70\cdot\frac{lbf}{ft^2}$ maximum lateral earth pressure

Minimum **(EMIN)**

$w_{et} := H1\cdot LEPMIN\cdot 1ft$ $w_{eb} := H2\cdot LEPMIN$

$\boxed{w_{et} = 431.667\,lbf}$ $\boxed{w_{eb} = 536.667\cdot\frac{lbf}{ft}}$

Maximum **(EMAX)**

$w_{et} := H1\cdot LEPMAX\cdot 1ft$ $w_{eb} := H2\cdot LEPMAX$

$\boxed{w_{et} = 863\,ft\cdot\frac{lbf}{ft}}$ top of wall $\boxed{w_{eb} = 1073\cdot\frac{lbf}{ft}}$ bottom of wall

Internal Fluid Pressure: (IFP)

$w_{ib} := \gamma_w\cdot P_h\cdot 1ft$ $\boxed{w_{ib} = 187\cdot\frac{lbf}{ft}}$ top of pedestal

$w_{ib} := \gamma_w \cdot (ClearRise + P_h) \cdot 1ft$ $\quad w_{ib} = 811 \cdot \frac{lbf}{ft}$ bottom of pedestal

Shear Capacity

$c := 2.0in$ rebar clear distance $\quad d_b := 0.625in$ bar diameter $\quad d := P_t - c - \frac{d_b}{2} \quad d = 27.688 \cdot in$

$f_c := 5 \quad ksi \quad \beta := 2 \quad d_{v1} := 0.9 \cdot d \quad d_{v1} = 24.919 \cdot in \quad b_v := 12in$

$d_{v2} := 0.72 \cdot P_t \quad d_{v2} = 21.6 \cdot in \quad d_v := \max(d_{v1}, d_{v2})$

$\phi V_c := .9 \cdot .0316 \cdot \beta \cdot \sqrt{f_c} \cdot ksi \cdot b_v \cdot d_v \quad \phi V_c = 3.8 \times 10^4 \cdot lbf \quad V_u := 3775lbf$

$if(\phi V_c > V_u, "OK", "NG") = "OK"$

Positive (Inside) Moment:

$d = 27.688 \cdot in \quad f_c := 5000 \quad psi \quad A_s := 0.74in^2$ Use #5 @ 5"

$f_y := 60000 \quad a := \frac{A_s \cdot f_y}{.85 \cdot f_c \cdot 12in} \quad a = 0.871 \cdot in \quad f_y := 60000psi$

$\phi M_n := .95 \cdot A_s \cdot f_y \cdot \left(d - \frac{a}{2}\right) \quad \phi M_n = 9.579 \times 10^4 \cdot ft \cdot lbf \quad M_u := 1777ft \cdot lbf$

$if(\phi M_n > M_u, "OK", "NG") = "OK"$

Negative (Outside Face) Moment:

$d = 27.688 \cdot in \quad f_c := 5000 \quad psi \quad A_s := 0.74in^2$

Use #5 @ 5"

$f_y := 60000 \quad a := \frac{A_s \cdot f_y}{.85 \cdot f_c \cdot 12in} \quad a = 0.871 \cdot in \quad f_y := 60000psi$

$\phi M_n := .95 \cdot A_s \cdot f_y \cdot \left(d - \frac{a}{2}\right) \quad \phi M_n = 9.579 \times 10^4 \cdot ft \cdot lbf \quad M_u := 5458ft \cdot lbf$

$if(\phi M_n > M_u, "OK", "NG") = "OK"$

Distribution Reinforcement;

$P_t = 30 \cdot in \quad A_{sMin} := 12in \cdot \frac{P_t}{2} \cdot 0.002 \quad A_{sMin} = 0.36 \cdot in^2$ #4 @ 6.5 (both side)

LRFD FOOTING DESIGN

Design Parameters:

$\gamma_d := 120\frac{lbf}{ft^3}$ soil weight

$\gamma_c := 150\frac{lbf}{ft^3}$ concrete weight

$f_c := 5000\frac{lbf}{in^2}$ 28 day strength

$K_{max} := .5$ max. earth pressure coefficient

$K_{min} := .25$ min. earth pressure coefficient

+ve lp diagram Footing extends outside the culvert leg

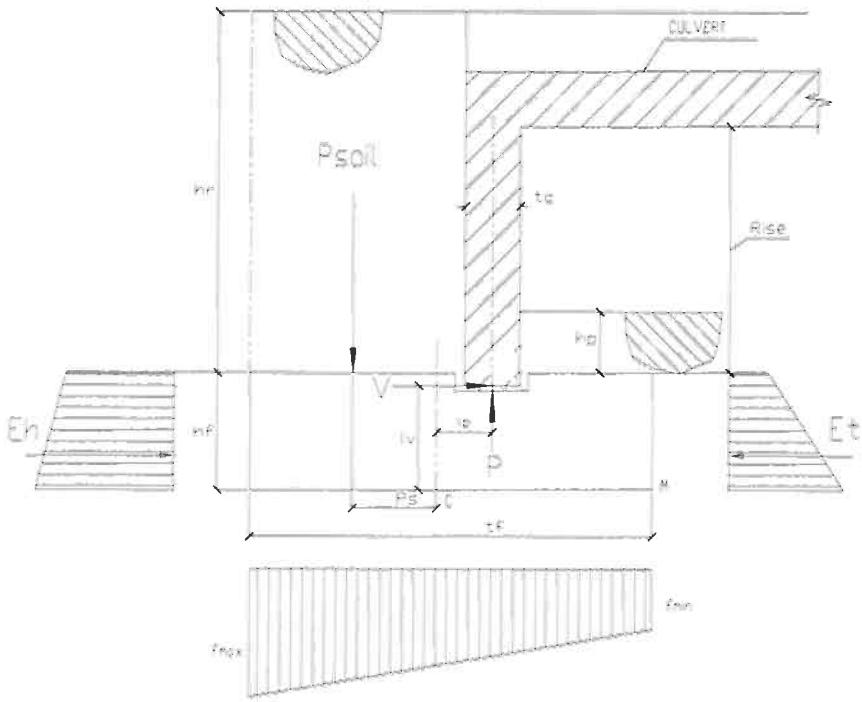

Geometry:

$h_f := 24in$ Footing thickness

$t_f := 108in$ Footing width

$t_c := 10in$ Culvert thickness

$h_r := 15ft$ Retained soil depth

Design Loads from Culvert:

$p := V_d + V_l = 1.272 \times 10^4\ lbf$ $v := 0lbf$ Unfactored Load $i := \frac{1ft}{1ft}$ $i = 1$ per foot increase due to gap in footing

$P := p \cdot i$ $V := v \cdot i$ $P = 1.272 \times 10^4\ lbf$ **Vertical Reaction** $V = 0$ **Horizontal Reaction**

$l_P := 0in$ Horiz. Distance P to Point C

$l_v := h_f - 2in$ $l_v = 22 \cdot in$ Vert. Distance from V to point C

NOTE: (-) Sign in lp means that the footing extends inside otherwse it extends outside the culvert. If lp is zero the footing is symetrically loaded.

$P_{soil1} := \gamma_d \cdot h_r \cdot \left(\frac{t_f - t_c}{2} + l_P \right) \cdot ft$ $\quad P_{soil1} = 7.35 \times 10^3\,lbf$ $\quad P_s := \frac{t_f - t_c}{4} + \frac{l_P}{2}$ $\quad P_s = 24.5 \cdot in$

$M_r := -P \cdot l_P + V \cdot l_v - P_{soil1} \cdot P_s$ $\quad M_r = -1.501 \times 10^4 \cdot ft \cdot lbf$ Maximum Moment at Point "C"

-ve lp diagram: Footing extends inside the culvert leg

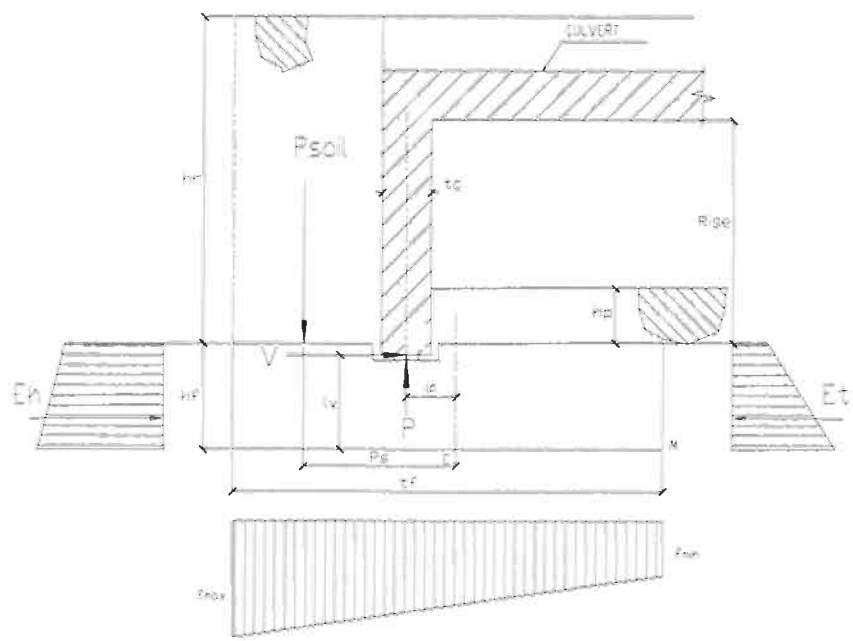

Soil bearing stresses

Section Properties:

$A_f := t_f \cdot 1ft$ $\quad A_f = 9\,ft^2$ Area of footing

$I_f := \frac{1}{12}\left(1ft \cdot t_f^{\,3}\right)$ $\quad I_f = 1 \times 10^6 \cdot in^4$ Moment of inertia of footing

Strength II analysis

$P_{conc} := \gamma_c \cdot h_f$ $\quad P_{conc} = 300 \cdot \frac{lbf}{ft^2}$

$e := \frac{M_r}{P}$ $\quad e = -1.18\,ft$ Center of gravity from Point C - Center Line of Foundation; Eccentricity

$B := t_f$ $\quad B = 9\,ft$ $\quad B_p := B - 2e$ $\quad B_p = 11.359\,ft$

$P_d := V_d = 5.2 \times 10^3\,lbf$ $\quad P_l := p - P_d = 7.52 \times 10^3\,lbf$ $\quad \gamma_l := 1.35$ $\quad \gamma_d := 1.25$ $\quad \gamma_s := 1.35$

$q_v := \frac{\gamma_l \cdot P_l + \gamma_d \cdot P_d + \gamma_s \cdot P_{soil1} + P_{conc} \cdot B \cdot 1ft}{B_p \cdot 1ft}$ $\quad q_v = 2.577 \times 10^3 \cdot \frac{lbf}{ft^2}$

$\phi_b := .45$ $\quad q_n := 10000 \frac{lbf}{ft^2}$ ***from geotech report*** $\quad q_R := \phi_b \cdot q_n$ $\quad q_R = 4.5 \times 10^3 \cdot \frac{lbf}{ft^2}$

$\text{if}(q_v \le q_R, \text{"OK"}, \text{"NG"}) = \text{"OK"}$

FOOTING SLAB DESIGN:

$c := 4.5in$ rebar clear distance $\quad d_b := 0.5in$ assumed bar diameter $\quad d := h_f - c - \frac{d_b}{2}$ $\quad d = 19.25 \cdot in$

Factored Load

$span1 := \frac{l_f}{2} - l_P$ $\quad span2 := \frac{l_f}{2} + l_P$

$span := \max(span1, span2)$

$p = 1.272 \times 10^4 \, lbf$ $\quad P := p \cdot i$ $\quad w_1 := \frac{\gamma_l \cdot P_l + \gamma_d \cdot P_d - P_{soil1} - P_{conc} \cdot 1ft^2}{span}$ $\quad w_1 = 2 \times 10^3 \cdot \frac{lbf}{ft}$

Shear:

$V_u := w_1 \cdot span$ $\quad V_u = 9.002 \times 10^3 \, lbf$

$h_f = 24 \cdot in$ $\quad c := 2in$ rebar clear distance $\quad d_b := 0.5in$ bar diameter

$f_c := 5 \quad ksi$ $\quad \beta := 2$ $\quad d_{v1} := 0.9 \cdot d$ $\quad d_{v1} = 17.325 \cdot in$ $\quad b_v := 12in$

$d_{v2} := 0.72 \cdot h_f$ $\quad d_{v2} = 17.28 \cdot in$ $\quad d_v := \max(d_{v1}, d_{v2})$

$\phi V_c := .9 \cdot .0316 \cdot \beta \cdot \sqrt{f_c} \cdot ksi \cdot b_v \cdot d_v$ $\quad \boxed{\phi V_c = 2.64 \times 10^4 \cdot lbf}$ $\quad \text{if}(\phi V_c > V_u, \text{"OK"}, \text{"NG"}) = \text{"OK"}$

Moment:

$d = 19.25 \cdot in$ $\quad f_c := 5000 \quad psi$

$M_u := \frac{w_1 \cdot span^2}{2}$ $\quad M_u = 2.025 \times 10^4 \cdot ft \cdot lbf$ moment $\quad A_s := 0.24in^2$

Use #4 @ 10 T / B

$f_y := 60000$ $\quad a := \frac{A_s \cdot f_y}{.85 \cdot f_c \cdot 12in}$ $\quad a = 0.282 \cdot in$ $\quad f_y := 60000psi$

$\phi M_n := .95 \cdot A_s \cdot f_y \cdot \left(d - \frac{a}{2}\right)$ $\quad \boxed{\phi M_n = 2.178 \times 10^4 \cdot ft \cdot lbf}$ $\quad \text{if}(\phi M_n > M_u, \text{"OK"}, \text{"NG"}) = \text{"OK"}$

$A_{stemp} := .0018 \cdot 12in \cdot \frac{h_f}{2}$ $\quad A_{stemp} = 0.259 \cdot in^2$ **Use #4 @ 9" T&B (Longitudinal)**

```
**************************************************
*                                                *
*           STAAD.Pro V8i SELECTseries5          *
*           Version  20.07.10.65                 *
*           Proprietary Program of               *
*           Bentley Systems, Inc.                *
*           Date=    MAY  8, 2015                *
*           Time=     9:47:27                    *
*                                                *
*      USER ID:                                  *
**************************************************
```

```
     1. STAAD PLANE
INPUT FILE: 3.0'-Pedestal-Fixed.STD
     2. START JOB INFORMATION
     3. ENGINEER DATE 04/01/15
     4. END JOB INFORMATION
     5. INPUT WIDTH 79
     6. UNIT FEET KIP
     7. JOINT COORDINATES
     8. 1 0 0 0; 2 0 3 0
     9. MEMBER INCIDENCES
    10. 1 1 2
    11. DEFINE MATERIAL START
    12. ISOTROPIC CONCRETE
    13. E 453600
    14. POISSON 0.17
    15. DENSITY 0.14999
    16. ALPHA 5.5E-006
    17. DAMP 0.05
    18. END DEFINE MATERIAL
    19. MEMBER PROPERTY
    20. 1 PRIS YD 2.5 ZD 1
    21. CONSTANTS
    22. MATERIAL CONCRETE ALL
    23. SUPPORTS
    24. 1 FIXED
    25. ***
    26. LOAD 1 LOADTYPE NONE  TITLE LOAD CASE 1- DEAD LOAD -COVER 1FT
    27. SELFWEIGHT Y -1
    28. JOINT LOAD
    29. 2 FY -5.2
    30. LOAD 2 LOADTYPE NONE  TITLE -EMAX
    31. MEMBER LOAD
    32. 1 TRAP GX 1.073 0.863
    33. LOAD 3 LOADTYPE NONE  TITLE -EMIN
    34. MEMBER LOAD
    35. 1 TRAP GX 0.537 0.432
    36. LOAD 4 LOADTYPE NONE  TITLE -IPF-WATER INSIDE
    37. MEMBER LOAD
    38. 1 TRAP GX -0.811 -0.187
```

```
39. LOAD 5 LOADTYPE NONE  TITLE LOAD CASE 1- LIVE LOAD
40. JOINT LOAD
41. 2 FY -7.52
42. LOAD COMB 100 COMBINATION LOAD CASE 100
43. 2 1.3
44. LOAD COMB 200 COMBINATION LOAD CASE 200
45. 1 1.3 5 1.75 3 1.0 4 1.75
46. ***
47. LOAD COMB 300 COMBINATION LOAD CASE -CRACK CONTROL-MAX OUTSIDE DEAD
48. 1 1.0 2 1.0
49. LOAD COMB 400 COMBINATION LOAD CASE -CRACK CONTROL-MAX INSIDE DEAD
50. 1 1.0 3 1.0 4 1.0
51. ***
52. LOAD COMB 301 COMBINATION LOAD CASE -CRACK CONTROL-MAX OUTSIDE LIVE
53. 5 1.0 2 1.0
54. LOAD COMB 401 COMBINATION LOAD CASE -CRACK CONTROL-MAX INSIDE LIVE
55. 5 1.0 3 1.0 4 1.0
56. ***
57. PERFORM ANALYSIS


        P R O B L E M   S T A T I S T I C S
        -----------------------------------

  NUMBER OF JOINTS          2  NUMBER OF MEMBERS       1
  NUMBER OF PLATES          0  NUMBER OF SOLIDS        0
  NUMBER OF SURFACES        0  NUMBER OF SUPPORTS      1


       SOLVER USED IS THE OUT-OF-CORE BASIC SOLVER

  ORIGINAL/FINAL BAND-WIDTH=     1/     1/      3 DOF
TOTAL      PRIMARY LOAD CASES =     5, TOTAL DEGREES OF FREEDOM =       3
TOTAL LOAD COMBINATION  CASES =     6  SO FAR.
  SIZE OF STIFFNESS MATRIX =        0 DOUBLE  KILO-WORDS
  REQRD/AVAIL. DISK SPACE  =     12.0/      0.0 MB



58. ***PERFORM ANALYSIS PRINT LOAD DATA
59. LOAD LIST 1 TO 4
60. PRINT SUPPORT REACTION ALL
```

SUPPORT REACTIONS -UNIT KIP FEET STRUCTURE TYPE = PLANE

JOINT	LOAD	FORCE-X	FORCE-Y	FORCE-Z	MOM-X	MOM-Y	MOM Z
1	1	0.00	6.32	0.00	0.00	0.00	0.00
	2	-2.90	0.00	0.00	0.00	0.00	4.20
	3	-1.45	0.00	0.00	0.00	0.00	2.10
	4	1.50	0.00	0.00	0.00	0.00	-1.78

********** END OF LATEST ANALYSIS RESULT **********

```
61. ***
62. *** BEAM DISPLACEMENTS AT CL FROM 1.0LL
63. ***LOAD LIST 600 601
64. ***PRINT JOINT DISPLACEMENTS LIST 2
65. ***
66. LOAD LIST 300 400 301 401
67. PRINT SUPPORT REACTION LIST 1
```

SUPPORT REACTIONS -UNIT KIP FEET STRUCTURE TYPE = PLANE

JOINT	LOAD	FORCE-X	FORCE-Y	FORCE-Z	MOM-X	MOM-Y	MOM Z
1	300	-2.90	6.32	0.00	0.00	0.00	4.20
	400	0.04	6.32	0.00	0.00	0.00	0.32
	301	-2.90	7.52	0.00	0.00	0.00	4.20
	401	0.04	7.52	0.00	0.00	0.00	0.32

********** END OF LATEST ANALYSIS RESULT **********

```
68. ***
69. LOAD LIST 100 200
70. PRINT SUPPORT REACTION LIST 1
```

SUPPORT REACTIONS -UNIT KIP FEET STRUCTURE TYPE = PLANE

JOINT	LOAD	FORCE-X	FORCE-Y	FORCE-Z	MOM-X	MOM-Y	MOM Z
1	100	-3.78	0.00	0.00	0.00	0.00	5.46
	200	1.17	21.38	0.00	0.00	0.00	-1.01

********** END OF LATEST ANALYSIS RESULT **********

```
71. ***
72. LOAD LIST 100 200
73. PRINT FORCE ENVELOPE NSECTION 2 LIST 1
```

MEMBER FORCE ENVELOPE

ALL UNITS ARE KIP FEET

MEMB	DISTANCE		FY	LD	MZ	LD	FZ	LD	MY	LD
1	0.00	MAX	3.78	100	5.46	100	0.00	200	0.00	200
		MIN	-1.17	200	-1.01	200	0.00	200	0.00	200
	0.25	MAX	3.43	100	4.56	100	0.00	200	0.00	200
		MIN	-0.96	200	-0.74	200	0.00	200	0.00	200
	0.50	MAX	3.09	100	3.74	100	0.00	200	0.00	200
		MIN	-0.77	200	-0.53	200	0.00	200	0.00	200
	0.75	MAX	2.75	100	3.01	100	0.00	200	0.00	200
		MIN	-0.60	200	-0.36	200	0.00	200	0.00	200
	1.00	MAX	2.43	100	2.37	100	0.00	200	0.00	200
		MIN	-0.45	200	-0.23	200	0.00	200	0.00	200
	1.25	MAX	2.10	100	1.80	100	0.00	200	0.00	200
		MIN	-0.32	200	-0.13	200	0.00	200	0.00	200
	1.50	MAX	1.79	100	1.31	100	0.00	200	0.00	200
		MIN	-0.21	200	-0.07	200	0.00	200	0.00	200
	1.75	MAX	1.47	100	0.91	100	0.00	200	0.00	200
		MIN	-0.13	200	-0.03	200	0.00	200	0.00	200
	2.00	MAX	1.17	100	0.58	100	0.00	200	0.00	200
		MIN	-0.06	200	0.00	200	0.00	200	0.00	200
	2.25	MAX	0.87	100	0.32	100	0.00	200	0.00	200
		MIN	-0.01	200	0.01	200	0.00	200	0.00	200
	2.50	MAX	0.57	100	0.14	100	0.00	200	0.00	200
		MIN	0.01	200	0.01	200	0.00	200	0.00	200
	2.75	MAX	0.28	100	0.04	100	0.00	200	0.00	200
		MIN	0.02	200	0.00	200	0.00	200	0.00	200
	3.00	MAX	0.00	200	0.00	200	0.00	200	0.00	200
		MIN	0.00	200	0.00	200	0.00	200	0.00	200

MAX/MIN FORCE VALUES FOR MEMB 1, AMONGST ALL SECT LOCATIONS

	FY/ FZ	DIST DIST	LD LD	MZ/ MY	DIST DIST	LD LD	FX	DIST	LD
MAX.	3.78	0.00	100	5.46	0.00	100			
	0.00	0.00	100	0.00	0.00	100	21.38 C	0.00	200
MIN.	-1.17	0.00	200	-1.01	0.00	200			
	0.00	3.00	200	0.00	3.00	200	0.00	3.00	100

********** END OF FORCE ENVELOPE FROM INTERNAL STORAGE **********

74. LOAD LIST 300 400

75. PRINT FORCE ENVELOPE NSECTION 2 LIST 1

MEMBER FORCE ENVELOPE

ALL UNITS ARE KIP FEET

MEMB	DISTANCE		FY	LD	MZ	LD	FZ	LD	MY	LD
1	0.00	MAX	2.90	300	4.20	300	0.00	400	0.00	400
		MIN	-0.04	400	0.32	400	0.00	400	0.00	400
	0.25	MAX	2.64	300	3.51	300	0.00	400	0.00	400
		MIN	0.02	400	0.33	400	0.00	400	0.00	400
	0.50	MAX	2.38	300	2.88	300	0.00	400	0.00	400
		MIN	0.07	400	0.32	400	0.00	400	0.00	400
	0.75	MAX	2.12	300	2.32	300	0.00	400	0.00	400
		MIN	0.11	400	0.29	400	0.00	400	0.00	400
	1.00	MAX	1.87	300	1.82	300	0.00	400	0.00	400
		MIN	0.14	400	0.26	400	0.00	400	0.00	400
	1.25	MAX	1.62	300	1.38	300	0.00	400	0.00	400
		MIN	0.16	400	0.22	400	0.00	400	0.00	400
	1.50	MAX	1.37	300	1.01	300	0.00	400	0.00	400
		MIN	0.17	400	0.18	400	0.00	400	0.00	400
	1.75	MAX	1.13	300	0.70	300	0.00	400	0.00	400
		MIN	0.17	400	0.14	400	0.00	400	0.00	400
	2.00	MAX	0.90	300	0.44	300	0.00	400	0.00	400
		MIN	0.16	400	0.09	400	0.00	400	0.00	400
	2.25	MAX	0.67	300	0.25	300	0.00	400	0.00	400
		MIN	0.14	400	0.06	400	0.00	400	0.00	400
	2.50	MAX	0.44	300	0.11	300	0.00	400	0.00	400
		MIN	0.10	400	0.03	400	0.00	400	0.00	400
	2.75	MAX	0.22	300	0.03	300	0.00	400	0.00	400
		MIN	0.06	400	0.01	400	0.00	400	0.00	400
	3.00	MAX	0.00	400	0.00	400	0.00	400	0.00	400
		MIN	0.00	400	0.00	400	0.00	400	0.00	400

MAX/MIN FORCE VALUES FOR MEMB 1, AMONGST ALL SECT LOCATIONS

	FY/ FZ	DIST DIST	LD LD	MZ/ MY	DIST DIST	LD LD	FX	DIST	LD
MAX.	2.90	0.00	300	4.20	0.00	300			
	0.00	0.00	300	0.00	0.00	300	6.32 C	0.00	300
MIN.	-0.04	0.00	400	0.00	3.00	400			
	0.00	3.00	400	0.00	3.00	400	5.20 C	3.00	400

********** END OF FORCE ENVELOPE FROM INTERNAL STORAGE **********

76. FINISH

```
*********** END OF THE STAAD.Pro RUN ***********

  **** DATE= MAY  8,2015   TIME=  9:47:28 ****

************************************************************
*   For technical assistance on STAAD.Pro, please visit    *
*   http://selectservices.bentley.com/en-US/               *
*                                                          *
*   Details about additional assistance from               *
*   Bentley and Partners can be found at program menu      *
*   Help->Technical Support                                *
*                                                          *
*      Copyright (c) 1997-2014 Bentley Systems, Inc.
*                http://www.bentley.com                    *
************************************************************
```

Software licensed to	Job No	Sheet No 1	Rev
	Part		
Job Title	Ref		
	By	Date 04/01/15	Chd
Client	File 3.0'-Pedestal-Fixed.std	Date/Time 08-May-2015 09:47	

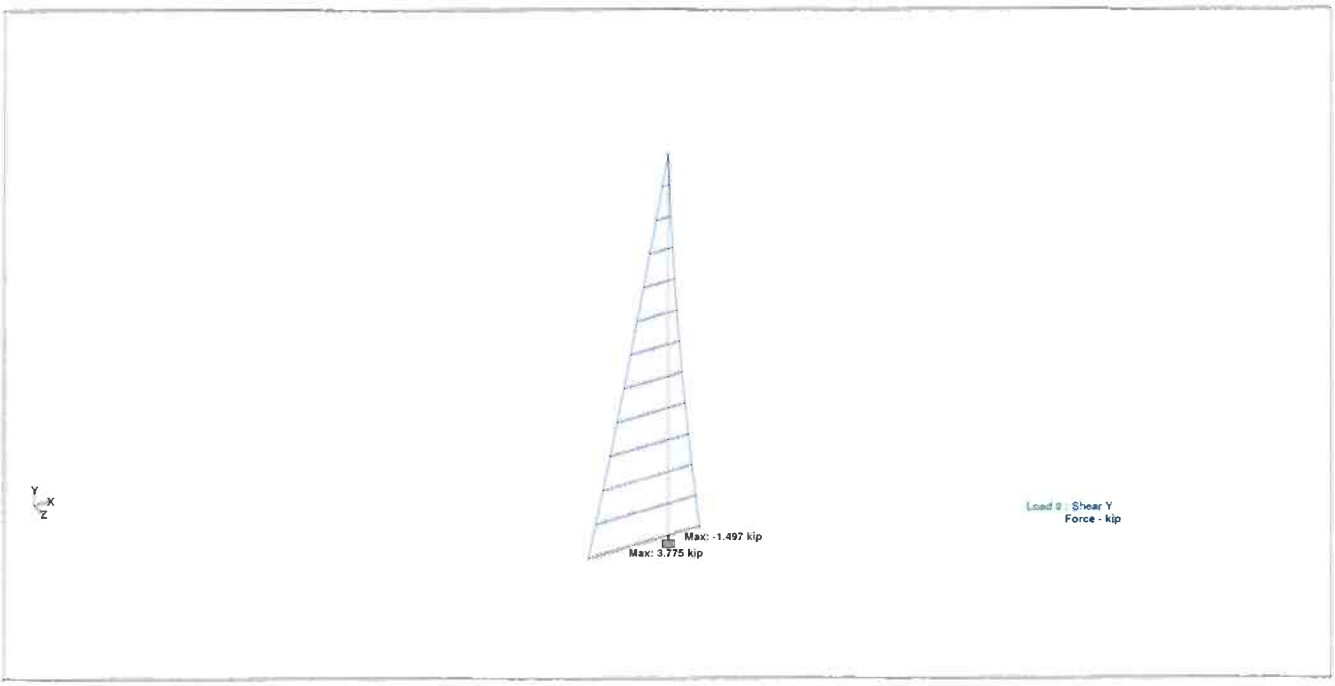

Whole Structure Fy 6kip:1ft 0 Envelope

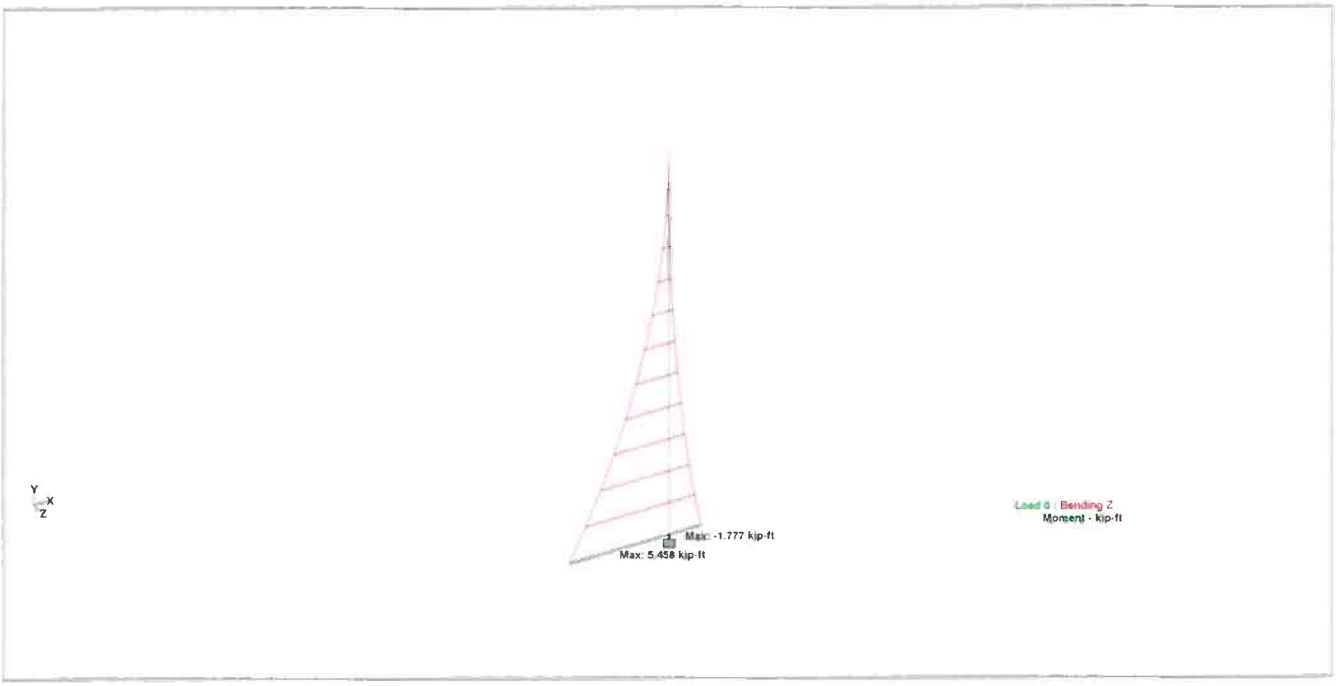

Whole Structure Mz 7kip-ft:1ft 0 Envelope

Section 6
STAAD Pro Output: 3' high Pedestal
Incl. BM & SF diagrams

```
****************************************************
*                                                  *
*           STAAD.Pro V8i SELECTseries5            *
*           Version  20.07.10.65                   *
*           Proprietary Program of                 *
*           Bentley Systems, Inc.                  *
*           Date=    APR  1, 2015                  *
*           Time=    10: 0:19                      *
*                                                  *
*      USER ID:                                    *
****************************************************
```

```
     1. STAAD PLANE
INPUT FILE: 3.0'-Pedestal-Fixed.STD
     2. START JOB INFORMATION
     3. ENGINEER DATE 04/01/15
     4. END JOB INFORMATION
     5. INPUT WIDTH 79
     6. UNIT FEET KIP
     7. JOINT COORDINATES
     8. 1 0 0 0; 2 0 3 0
     9. MEMBER INCIDENCES
    10. 1 1 2
    11. DEFINE MATERIAL START
    12. ISOTROPIC CONCRETE
    13. E 453600
    14. POISSON 0.17
    15. DENSITY 0.14999
    16. ALPHA 5.5E-006
    17. DAMP 0.05
    18. END DEFINE MATERIAL
    19. MEMBER PROPERTY
    20. 1 PRIS YD 2.5 ZD 1
    21. CONSTANTS
    22. MATERIAL CONCRETE ALL
    23. SUPPORTS
    24. 1 FIXED
    25. ***
    26. LOAD 1 LOADTYPE NONE  TITLE LOAD CASE 1- DEAD LOAD -COVER 1FT
    27. SELFWEIGHT Y -1
    28. JOINT LOAD
    29. 2 FY -5.2
    30. LOAD 2 LOADTYPE NONE  TITLE -EMAX
    31. MEMBER LOAD
    32. 1 TRAP GX 0.92 0.74
    33. LOAD 3 LOADTYPE NONE  TITLE -EMIN
    34. MEMBER LOAD
    35. 1 TRAP GX 0.46 0.37
    36. LOAD 4 LOADTYPE NONE  TITLE -IPF-WATER INSIDE
    37. MEMBER LOAD
    38. 1 TRAP GX -0.811 -0.187
```

```
39. LOAD 5 LOADTYPE NONE  TITLE LOAD CASE 1- LIVE LOAD
40. JOINT LOAD
41. 2 FY -7.52
42. LOAD COMB 100 COMBINATION LOAD CASE 100
43. 2 1.3
44. LOAD COMB 200 COMBINATION LOAD CASE 200
45. 1 1.3 5 1.75 3 1.0 4 1.75
46. ***
47. LOAD COMB 300 COMBINATION LOAD CASE -CRACK CONTROL-MAX OUTSIDE DEAD
48. 1 1.0 2 1.0
49. LOAD COMB 400 COMBINATION LOAD CASE -CRACK CONTROL-MAX INSIDE DEAD
50. 1 1.0 3 1.0 4 1.0
51. ***
52. LOAD COMB 301 COMBINATION LOAD CASE -CRACK CONTROL-MAX OUTSIDE LIVE
53. 5 1.0 2 1.0
54. LOAD COMB 401 COMBINATION LOAD CASE -CRACK CONTROL-MAX INSIDE LIVE
55. 5 1.0 3 1.0 4 1.0
56. ***
57. PERFORM ANALYSIS
```

```
        P R O B L E M   S T A T I S T I C S
        -----------------------------------

  NUMBER OF JOINTS          2  NUMBER OF MEMBERS       1
  NUMBER OF PLATES          0  NUMBER OF SOLIDS        0
  NUMBER OF SURFACES        0  NUMBER OF SUPPORTS      1


       SOLVER USED IS THE OUT-OF-CORE BASIC SOLVER

  ORIGINAL/FINAL BAND-WIDTH=     1/      1/      3 DOF
TOTAL      PRIMARY LOAD CASES =     5, TOTAL DEGREES OF FREEDOM =       3
TOTAL LOAD COMBINATION  CASES =     6  SO FAR.
  SIZE OF STIFFNESS MATRIX =        0 DOUBLE  KILO-WORDS
  REQRD/AVAIL. DISK SPACE  =     12.0/      0.0 MB
```

```
58. ***PERFORM ANALYSIS PRINT LOAD DATA
59. LOAD LIST 1 TO 4
60. PRINT SUPPORT REACTION ALL
```

SUPPORT REACTIONS -UNIT KIP FEET STRUCTURE TYPE = PLANE

JOINT	LOAD	FORCE-X	FORCE-Y	FORCE-Z	MOM-X	MOM-Y	MOM Z
1	1	0.00	6.32	0.00	0.00	0.00	0.00
	2	-2.49	0.00	0.00	0.00	0.00	3.60
	3	-1.25	0.00	0.00	0.00	0.00	1.80
	4	1.50	0.00	0.00	0.00	0.00	-1.78

********** END OF LATEST ANALYSIS RESULT **********

```
61. ***
62. *** BEAM DISPLACEMENTS AT CL FROM 1.0LL
63. ***LOAD LIST 600 601
64. ***PRINT JOINT DISPLACEMENTS LIST 2
65. ***
66. LOAD LIST 300 400 301 401
67. PRINT SUPPORT REACTION LIST 1
```

SUPPORT REACTIONS -UNIT KIP FEET STRUCTURE TYPE = PLANE

JOINT	LOAD	FORCE-X	FORCE-Y	FORCE-Z	MOM-X	MOM-Y	MOM Z
1	300	-2.49	6.32	0.00	0.00	0.00	3.60
	400	0.25	6.32	0.00	0.00	0.00	0.02
	301	-2.49	7.52	0.00	0.00	0.00	3.60
	401	0.25	7.52	0.00	0.00	0.00	0.02

********** END OF LATEST ANALYSIS RESULT **********

```
68. ***
69. LOAD LIST 100 200
70. PRINT SUPPORT REACTION LIST 1
```

SUPPORT REACTIONS -UNIT KIP FEET STRUCTURE TYPE = PLANE

JOINT	LOAD	FORCE-X	FORCE-Y	FORCE-Z	MOM-X	MOM-Y	MOM Z
1	100	-3.24	0.00	0.00	0.00	0.00	4.68
	200	1.37	21.38	0.00	0.00	0.00	-1.31

********** END OF LATEST ANALYSIS RESULT **********

```
71. ***
72. LOAD LIST 100 200
73. PRINT FORCE ENVELOPE NSECTION 2 LIST 1
```

MEMBER FORCE ENVELOPE

ALL UNITS ARE KIP FEET

MEMB	DISTANCE		FY	LD	MZ	LD	FZ	LD	MY	LD
1	0.00	MAX	3.24	100	4.68	100	0.00	200	0.00	200
		MIN	-1.37	200	-1.31	200	0.00	200	0.00	200
	0.25	MAX	2.94	100	3.91	100	0.00	200	0.00	200
		MIN	-1.15	200	-1.00	200	0.00	200	0.00	200
	0.50	MAX	2.65	100	3.21	100	0.00	200	0.00	200
		MIN	-0.94	200	-0.74	200	0.00	200	0.00	200
	0.75	MAX	2.36	100	2.58	100	0.00	200	0.00	200
		MIN	-0.75	200	-0.53	200	0.00	200	0.00	200
	1.00	MAX	2.08	100	2.03	100	0.00	200	0.00	200
		MIN	-0.58	200	-0.36	200	0.00	200	0.00	200
	1.25	MAX	1.80	100	1.54	100	0.00	200	0.00	200
		MIN	-0.44	200	-0.23	200	0.00	200	0.00	200
	1.50	MAX	1.53	100	1.13	100	0.00	200	0.00	200
		MIN	-0.31	200	-0.14	200	0.00	200	0.00	200
	1.75	MAX	1.26	100	0.78	100	0.00	200	0.00	200
		MIN	-0.21	200	-0.08	200	0.00	200	0.00	200
	2.00	MAX	1.00	100	0.49	100	0.00	200	0.00	200
		MIN	-0.12	200	-0.03	200	0.00	200	0.00	200
	2.25	MAX	0.74	100	0.28	100	0.00	200	0.00	200
		MIN	-0.06	200	-0.01	200	0.00	200	0.00	200
	2.50	MAX	0.49	100	0.12	100	0.00	200	0.00	200
		MIN	-0.02	200	0.00	200	0.00	200	0.00	200
	2.75	MAX	0.24	100	0.03	100	0.00	200	0.00	200
		MIN	0.00	200	0.00	200	0.00	200	0.00	200
	3.00	MAX	0.00	200	0.00	200	0.00	200	0.00	200
		MIN	0.00	200	0.00	200	0.00	200	0.00	200

MAX/MIN FORCE VALUES FOR MEMB 1, AMONGST ALL SECT LOCATIONS

	FY/ FZ	DIST DIST	LD LD	MZ/ MY	DIST DIST	LD LD	FX	DIST	LD
MAX.	3.24	0.00	100	4.68	0.00	100			
	0.00	0.00	100	0.00	0.00	100	21.38 C	0.00	200
MIN.	-1.37	0.00	200	-1.31	0.00	200			
	0.00	3.00	200	0.00	3.00	200	0.00	3.00	100

********** END OF FORCE ENVELOPE FROM INTERNAL STORAGE **********

74. LOAD LIST 300 400

75. PRINT FORCE ENVELOPE NSECTION 2 LIST 1

MEMBER FORCE ENVELOPE

ALL UNITS ARE KIP FEET

MEMB	DISTANCE		FY	LD	MZ	LD	FZ	LD	MY	LD
1	0.00	MAX	2.49	300	3.60	300	0.00	400	0.00	400
		MIN	-0.25	400	0.02	400	0.00	400	0.00	400
	0.25	MAX	2.26	300	3.01	300	0.00	400	0.00	400
		MIN	-0.17	400	0.07	400	0.00	400	0.00	400
	0.50	MAX	2.04	300	2.47	300	0.00	400	0.00	400
		MIN	-0.10	400	0.11	400	0.00	400	0.00	400
	0.75	MAX	1.82	300	1.99	300	0.00	400	0.00	400
		MIN	-0.04	400	0.13	400	0.00	400	0.00	400
	1.00	MAX	1.60	300	1.56	300	0.00	400	0.00	400
		MIN	0.01	400	0.13	400	0.00	400	0.00	400
	1.25	MAX	1.39	300	1.19	300	0.00	400	0.00	400
		MIN	0.05	400	0.12	400	0.00	400	0.00	400
	1.50	MAX	1.18	300	0.87	300	0.00	400	0.00	400
		MIN	0.07	400	0.11	400	0.00	400	0.00	400
	1.75	MAX	0.97	300	0.60	300	0.00	400	0.00	400
		MIN	0.09	400	0.09	400	0.00	400	0.00	400
	2.00	MAX	0.77	300	0.38	300	0.00	400	0.00	400
		MIN	0.09	400	0.06	400	0.00	400	0.00	400
	2.25	MAX	0.57	300	0.21	300	0.00	400	0.00	400
		MIN	0.09	400	0.04	400	0.00	400	0.00	400
	2.50	MAX	0.38	300	0.09	300	0.00	400	0.00	400
		MIN	0.07	400	0.02	400	0.00	400	0.00	400
	2.75	MAX	0.19	300	0.02	300	0.00	400	0.00	400
		MIN	0.04	400	0.01	400	0.00	400	0.00	400
	3.00	MAX	0.00	400	0.00	400	0.00	400	0.00	400
		MIN	0.00	400	0.00	400	0.00	400	0.00	400

MAX/MIN FORCE VALUES FOR MEMB 1, AMONGST ALL SECT LOCATIONS

	FY/ FZ	DIST DIST	LD LD	MZ/ MY	DIST DIST	LD LD	FX	DIST	LD
MAX.	2.49	0.00	300	3.60	0.00	300			
	0.00	0.00	300	0.00	0.00	300	6.32 C	0.00	300
MIN.	-0.25	0.00	400	0.00	3.00	400			
	0.00	3.00	400	0.00	3.00	400	5.20 C	3.00	400

********** END OF FORCE ENVELOPE FROM INTERNAL STORAGE **********

76. FINISH

```
*********** END OF THE STAAD.Pro RUN ***********

  **** DATE= APR  1,2015   TIME= 10: 0:20 ****

************************************************************
*   For technical assistance on STAAD.Pro, please visit    *
*   http://selectservices.bentley.com/en-US/               *
*                                                          *
*   Details about additional assistance from               *
*   Bentley and Partners can be found at program menu      *
*   Help->Technical Support                                *
*                                                          *
*      Copyright (c) 1997-2014 Bentley Systems, Inc.
*                http://www.bentley.com                    *
************************************************************
```

Software licensed to	Job No	Sheet No 1	Rev
	Part		
Job Title	Ref		
	By	Date 04/01/15	Chd
Client	File 3.0'-Pedestal-Fixed.std	Date/Time 01-Apr-2015 09:59	

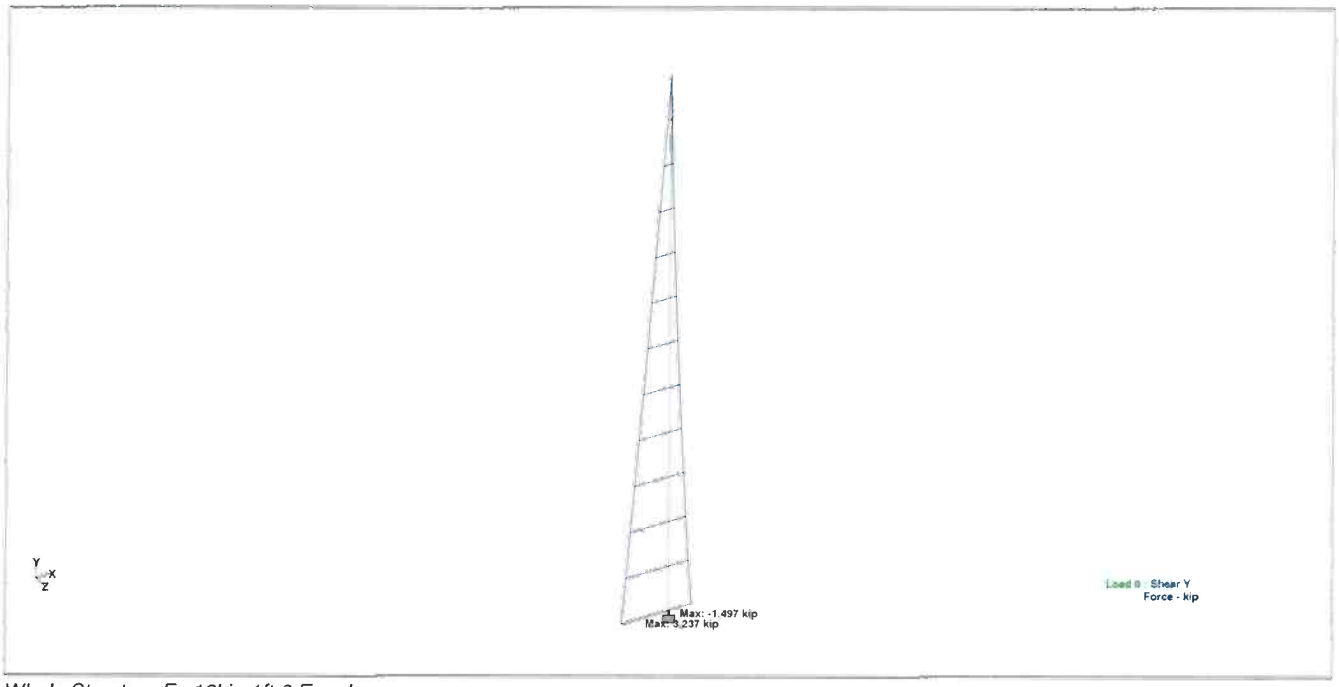

Whole Structure Fy 12kip:1ft 0 Envelope

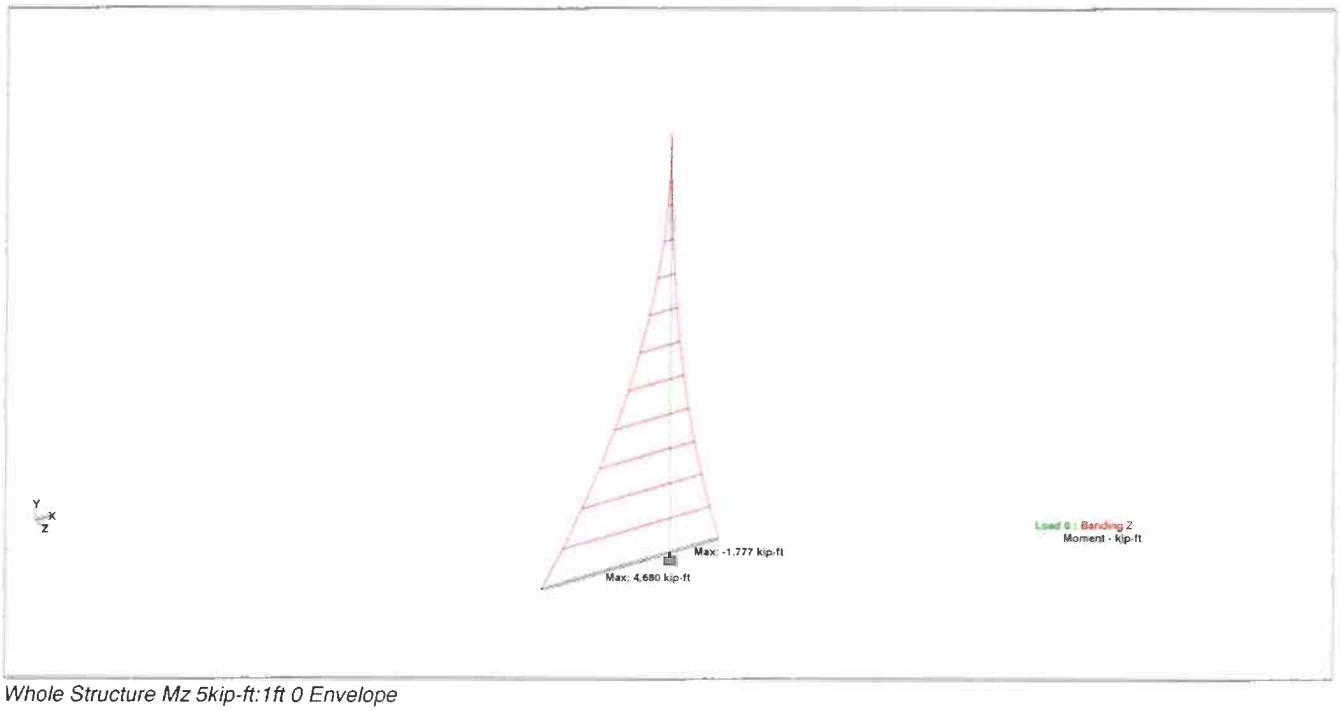

Whole Structure Mz 5kip-ft:1ft 0 Envelope

Section 12
Bridge Load Rating

Description	Pages
Load Rating Summary	1
Mathcad Calculations: 26' x 10' 3-Sided Culvert: HL93, 0.5'-1' Earth Cover	13
STAAD Pro Output : 26' x 10' 3-Sided Culvert: HL93, 0.5'-1' Earth Cover	34
PAGES	48

Route No: TH 3 (FAS 0302)
Bridge No 6
Richford, VT

08/08/12

LRFR LOAD RATING FACTORS

LOADING LEVELS	TRUCK						
	H-20	HL-93	3SC	6 AXLE	3A. STR.	4A. STR.	5A. SEMI.
TONNAGE	20	36	36	66	30	34.5	38
INVENTORY	1.36	1.08	1.5	1.01	1.12	1.05	1.6
POSTING							
OPERATING	1.77	1.4	1.94	1.3	1.45	1.36	2.07

26ft x 10ft (3 sided Culvert);
Design Input Data for STAAD.Pro Analysis; HL93 Live Load; Earth Cover C=0.5ft - 1.0ft

Reference Dwg: C22312-LO1

References:
1. **AASHTO The Manual for Bridge Evaluation 2nd Edition 2011**
2. **Section A: STAAD.Pro Computer Output.**

DESIGN PARAMETERS:

$\gamma_w := 62.4 \cdot \frac{lbf}{ft^3}$ unit weight of water

$\gamma_c := 150 \cdot \frac{lbf}{ft^3}$ unit weight of concrete

$\gamma_e := 140 \cdot \frac{lbf}{ft^3}$ unit weight of earth

$DE_1 := 0.5 \quad ft$ Depth of earth Cover -Min

$DE_2 := 1.0 \quad ft$ Depth of earth Cover -Max

$DE_{ave} := \frac{DE_1 + DE_2}{2} = 0.75 \quad ft$ Depth of earth Cover -Average

$L_T := 10 \cdot in$ Length of tire contact area -parallel to span

$K_{max} := .5$ max. earth pressure coefficient

$LLDF := 1.10$ factor for distribution of live load with depth of fill

$K_{min} := .25$ min. earth pressure coefficient

Geometry:

$ClearSpan := 26 \cdot ft$ ClearSpan

$ClearRise := 10 \cdot ft$ ClearRise

Member Properties:

$b_v := 12 \cdot in$ design section width

$t_t := 16 \cdot in$ top slab thickness

$t_w := 10 \cdot in$ wall thickness

$L_{Section} := 7.5 \cdot ft$ Section Length

$Span := ClearSpan + t_w = 26.83 \ ft$

$Rise := ClearRise + \left(\frac{t_t}{2}\right) = 10.67 \ ft$

$t_{Min} := \frac{ClearSpan + 10 \cdot ft}{30} = 1.2 \ ft$ Estimate Slab Thickness

AASHTO Table 2.5.2.6.3-1

$F_e := 1 + 0.2 \cdot \frac{DE_{ave} \cdot ft}{ClearSpan + 2 \cdot t_w} = 1.01$ **Soil-Structure Interaction Factor**

AASHTO Eqn 12.11.2.2.1-2

$F_{eMax} := min(F_e, 1.15) = 1.01$

Dead Load: (DL)

$D_{pav} := F_{eMax} \cdot \gamma_e \cdot DE_{ave} \cdot ft \cdot 1 \cdot ft = 105.57 \ \frac{lbf}{ft}$ Dead Load on Top Slab

Live Load: Design Truck

Multiple presence factor $M := 1.2$

$F_1 := 8000 \cdot lbf$ Axle load 1

$F_{23} := 32000 \cdot lbf$ Axle load 2 & 3

$Im := 33 \cdot (1.0 - 0.125 \cdot DE_1)$ $Im = 30.94$

Dynamic load allowance $I_i := 1 + \frac{Im}{100} = 1.31$

$I := max(1, I_i)$ $I = 1.31$

$E_{perp} := 96 \cdot in + \left(1.44 \cdot \frac{ClearSpan}{12}\right) = 11.12\ ft$ Distribution - perpendicular to span

$E_{para} := L_T + (LLDF \cdot DE_{ave} \cdot in) = 0.9\ ft$ Distribution - parallel to span

$D := 6 \cdot ft$ Wheel spacing across a Design truck

$D1 := 14 \cdot ft$ Typical Axle spacing

$P1 := \frac{M \cdot I \cdot F_1 \cdot ft}{E_{perp}} = (1.13 \cdot 10^3)\ lbf$

$P2 := \frac{M \cdot I \cdot F_{23} \cdot ft}{E_{perp}} = (4.522 \cdot 10^3)\ lbf$

$P3 := \frac{M \cdot I \cdot F_{23} \cdot ft}{E_{perp}} = (4.522 \cdot 10^3)\ lbf$

Live Load: Design Tandem

$F_{34} := 25000 \cdot lbf$ Axle load 3 & 4

$D := 6 \cdot ft$ Wheel spacing across a Design tandem

$D3 := 4 \cdot ft$ Distance between Axles of a Design tandem

$P_{Ta34} := \frac{M \cdot I \cdot F_{34} \cdot ft}{E_{perp}} = (3.532 \cdot 10^3)\ lbf$

Live Load: Design Lane load

Applicable if Span is greater than 15ft

$W_{10} := 640 \cdot \frac{lbf}{ft}$ $W_1 := \frac{W_{10}}{10} = 64\ \frac{lbf}{ft}$ Design Lane load over 10 ft width

Lateral Earth Pressure:

$H1 := DE_2 \cdot ft + t_t = 2.33\ ft$ soil depth at top of wall

$H2 := H1 + ClearRise = 12.33\ ft$ soil depth at bottom of wall

$LEPMIN := K_{min} \cdot \gamma_e \cdot ft = 35\ \frac{lbf}{ft^2}$ minimum lateral earth pressure

$LEPMAX := K_{max} \cdot \gamma_e \cdot ft = 70\ \frac{lbf}{ft^2}$ maximum lateral earth pressure

Minimum **(EMIN)** top of wall bottom of wall

$w_{et} := H1 \cdot LEPMIN = 81.67 \ \frac{lbf}{ft}$ $w_{eb} := H2 \cdot LEPMIN = 431.67 \ \frac{lbf}{ft}$

Maximum **(EMAX)**

$w_{et} := H1 \cdot LEPMAX = 163.33 \ \frac{lbf}{ft}$ $w_{eb} := H2 \cdot LEPMAX = 863.33 \ \frac{lbf}{ft}$

Internal Fluid Pressure: (IFP)

$w_{ib} := \gamma_w \cdot ClearRise \cdot 1 \cdot ft = 624 \ \frac{lbf}{ft}$ bottom of wall

OTHER TRUCKS CONFIGURATION

Live Load: H20

Multiple presence factor $M := 1.2$

$F_1 := 8000 \cdot lbf$ Axle load 1 $F_{23} := 32000 \cdot lbf$ Axle load 2 & 3

2 axles are Spaced : 14ft apart

$D := 6 \cdot ft$ Wheel spacing $D1 := 14 \cdot ft$ Axle spacing

$$P1 := \frac{M \cdot I \cdot F_1 \cdot ft}{E_{perp}} = \left(1.13 \cdot 10^3\right) \ lbf \qquad P2 := \frac{M \cdot I \cdot F_{23} \cdot ft}{E_{perp}} = \left(4.522 \cdot 10^3\right) \ lbf$$

Live Load: 3SC

Multiple presence factor $M := 1.2$

$F_1 := 8000 \cdot lbf$ Axle load 1 $F_{Others2A} := 16000 \cdot lbf$ Other Axle loads A

$F_{Others2B} := 16000 \cdot lbf$ Other Axle loads B

$$P2A := \frac{M \cdot I \cdot F_1 \cdot ft}{E_{perp}} = \left(1.13 \cdot 10^3\right) \ lbf$$

$$P2A := \frac{M \cdot I \cdot F_{Others2A} \cdot ft}{E_{perp}} = \left(2.26 \cdot 10^3\right) \ lbf$$

5 axle with 3 critical ones spaced: 22ft & 4ft apart

Live Load: 6 Axle Trailer

Multiple presence factor $M := 1.0$

$F_1 := 12000 \cdot lbf$ Axle load 1 $F_{Others3A} := 24000 \cdot lbf$ Other Axle loads A

$$P3A := \frac{M \cdot I \cdot F_{Others3A} \cdot ft}{E_{perp}} = \left(2.83 \cdot 10^3\right) \ lbf$$

6 axle with 3 critical ones spaced: 4ft & 4ft apart

Live Load: 3 Axle Straight

Multiple presence factor $M := 1.2$

$F_4 := 12000 \cdot lbf$ Axle load 1 $F_{Others4} := 24000 \cdot lbf$ Other Axle loads

$$P4 := \frac{M \cdot I \cdot F_4 \cdot ft}{E_{perp}} = \left(1.7 \cdot 10^3\right)\ lbf$$

$$P4 := \frac{M \cdot I \cdot F_{Others4} \cdot ft}{E_{perp}} = \left(3.39 \cdot 10^3\right)\ lbf$$

3 axle spaced: 15ft & 4ft apart

Live Load: 4 Axle Straight

Multiple presence factor $M := 1.2$

$F_5 := 12000 \cdot lbf$ Axle load 1 $F_{Others5} := 19000 \cdot lbf$ Other Axle loads

$$P5 := \frac{M \cdot I \cdot F_5 \cdot ft}{E_{perp}} = \left(1.7 \cdot 10^3\right)\ lbf$$

$$P5A := \frac{M \cdot I \cdot F_{Others5} \cdot ft}{E_{perp}} = \left(2.68 \cdot 10^3\right)\ lbf$$

4 axle with spaced:15ft, 4ft & 4ft apart

Live Load: 5 Axle Semi

Multiple presence factor $M := 1.0$

$F_1 := 8000 \cdot lbf$ Axle load 1 $F_{Others6A} := 17000 \cdot lbf$ Other Axle loads A

$F_{Others6B} := 17000 \cdot lbf$ Other Axle loads B

$$P6A := \frac{M \cdot I \cdot F_{Others6A} \cdot ft}{E_{perp}} = \left(2.002 \cdot 10^3\right)\ lbf$$

5 axle with 4 Critical ones spaced: 4ft, 16ft & 4ft apart

Member Capacity taken from Design

TOP SLAB Member 3 & 4

$\phi V_{cTS} := \left(1.932 \cdot 10^4\right)\ lbf$

$\phi M_{nTS} := \left(1.1 \cdot 10^5\right)\ (ft \cdot lbf)$

WALLS: Members 1 & 2

$\phi V_{cW} := \left(1.11 \cdot 10^4\right)\ lbf$

$\phi M_{nW} := \left(4.94 \cdot 10^4\right)\ (ft \cdot lbf)$

Load Rating Calculations

Load Combinations:

- 1.0DC+ 1.0Emin - "Dead".
- 1.0LL + 1.0Emin + 1.0Win - "MOMENT & SHEAR ".

Where,
DC - Dead Load;
LL - Live Load;
Emin - Min. Lateral Earth Pressure;
Win - Inside Water Pressure.

STAAD.Pro Computer Output.

$DeadM_{TS} := 9980 \cdot ft \cdot lbf$ Top Slab Dead Load Moment

$DeadM_{W} := 15770 \cdot ft \cdot lbf$ Wall Dead Load Moment

$DeadV_{TS} := 3970 \cdot lbf$ Top Slab Dead Load Shear

$DeadV_{W} := 2570 \cdot lbf$ Wall Dead Load Shear

HL93 TRUCK

Inventory Rating: $\gamma_{DC} := 1.25$ $\gamma_{LL} := 1.75$

Moment Top Slab; $LiveM_{TS} := 42910 \cdot ft \cdot lbf$ Top Slab Live Load Moment

$$RFM_{TS} := \frac{\phi M_{nTS} - \gamma_{DC} \cdot DeadM_{TS}}{\gamma_{LL} \cdot LiveM_{TS}} = 1.3$$

Walls; $LiveM_{W} := 5030 \cdot ft \cdot lbf$ Wall Live Load Moment

$$RFM_{W} := \frac{\phi M_{nW} - \gamma_{DC} \cdot DeadM_{W}}{\gamma_{LL} \cdot LiveM_{W}} = 3.37$$

Shear Top Slab; $LiveV_{TS} := 7040 \cdot lbf$ Top Slab Live Load Shear

$$RFV_{TS} := \frac{\phi V_{cTS} - \gamma_{DC} \cdot DeadV_{TS}}{\gamma_{LL} \cdot LiveV_{TS}} = 1.17$$

Walls; $LiveV_{W} := 670 \cdot lbf$ Wall Live Load Shear

$$RFV_{W} := \frac{\phi V_{cW} - \gamma_{DC} \cdot DeadV_{W}}{\gamma_{LL} \cdot LiveV_{W}} = 6.73$$

Inventory Rating:

$$RFTrI_{MIN} := min\left(RFM_{TS}, RFM_W, RFV_{TS}, RFV_W\right) = 1.17$$

Operating Rating: $\gamma_{DC} := 1.25 \quad \gamma_{LL} := 1.35$

Use corresponding Values that govern Inventory Rating

$$\phi V_{cmin} := \phi V_{cTS} = \left(1.93 \cdot 10^4\right)\ lbf$$

$$DeadV_{min} := DeadV_{TS} = \left(3.97 \cdot 10^3\right)\ lbf$$

$$LiveV_{min} := LiveV_{TS} = \left(7.04 \cdot 10^3\right)\ lbf$$

$$RFTrO := \frac{\phi V_{cmin} - \gamma_{DC} \cdot DeadV_{min}}{\gamma_{LL} \cdot LiveV_{min}} = 1.51$$

HL93 TANDEM

Inventory Rating: $\gamma_{DC} := 1.25 \qquad \gamma_{LL} := 1.75$

Moment Top Slab: $LiveM_{TS} := 51470 \cdot ft \cdot lbf$ Top Slab Live Load Moment

$$RFM_{TS} := \frac{\phi M_{nTS} - \gamma_{DC} \cdot DeadM_{TS}}{\gamma_{LL} \cdot LiveM_{TS}} = 1.08$$

Walls: $LiveM_W := 5030 \cdot ft \cdot lbf$ Wall Live Load Moment

$$RFM_W := \frac{\phi M_{nW} - \gamma_{DC} \cdot DeadM_W}{\gamma_{LL} \cdot LiveM_W} = 3.37$$

Shear Top Slab: $LiveV_{TS} := 6730 \cdot lbf$ Top Slab Live Load Shear

$$RFV_{TS} := \frac{\phi V_{cTS} - \gamma_{DC} \cdot DeadV_{TS}}{\gamma_{LL} \cdot LiveV_{TS}} = 1.219$$

Walls: $LiveV_W := 670 \cdot lbf$ Wall Live Load Shear

$$RFV_W := \frac{\phi V_{cW} - \gamma_{DC} \cdot DeadV_W}{\gamma_{LL} \cdot LiveV_W} = 6.73$$

Inventory Rating:

$$RFTaI_{MIN} := min\left(RFM_{TS}, RFM_W, RFV_{TS}, RFV_W\right) = 1.08$$

Operating Rating: $\gamma_{DC} := 1.25 \quad \gamma_{LL} := 1.35$

Use corresponding Values that govern Inventory Rating

$$\phi M_{nmin} := \phi M_{nTS} = \left(1.1 \cdot 10^5\right)\ ft \cdot lbf$$

$$DeadM_{min} := DeadM_{TS} = \left(9.98 \cdot 10^3\right)\ ft \cdot lbf$$

$$LiveM_{min} := LiveM_{TS} = \left(5.15 \cdot 10^4\right)\ ft \cdot lbf$$

$$RFTaO := \frac{\phi M_{nmin} - \gamma_{DC} \cdot DeadM_{min}}{\gamma_{LL} \cdot LiveM_{min}} = 1.4$$

Other Truck Rating Calculations

HS 20

Inventory Rating: $\gamma_{DC} := 1.25$ $\gamma_{LL} := 1.75$

Moment Top Slab: $LiveM_{TS} := 40900 \cdot ft \cdot lbf$ Top Slab Live Load Moment

$$RFM_{TS} := \frac{\phi M_{nTS} - \gamma_{DC} \cdot DeadM_{TS}}{\gamma_{LL} \cdot LiveM_{TS}} = 1.36$$

Walls: $LiveM_W := 5030 \cdot ft \cdot lbf$ Wall Live Load Moment

$$RFM_W := \frac{\phi M_{nW} - \gamma_{DC} \cdot DeadM_W}{\gamma_{LL} \cdot LiveM_W} = 3.37$$

Shear

Top Slab: $LiveV_{TS} := 5280 \cdot lbf$ Top Slab Live Load Shear

$$RFV_{TS} := \frac{\phi V_{cTS} - \gamma_{DC} \cdot DeadV_{TS}}{\gamma_{LL} \cdot LiveV_{TS}} = 1.55$$

Walls: $LiveV_W := 670 \cdot lbf$ Wall Live Load Shear

$$RFV_W := \frac{\phi V_{cW} - \gamma_{DC} \cdot DeadV_W}{\gamma_{LL} \cdot LiveV_W} = 6.73$$

Inventory Rating:

$$RFHS20I_{MIN} := min\left(RFM_{TS}, RFM_W, RFV_{TS}, RFV_W\right) = 1.36$$

Operating Rating: $\gamma_{DC} := 1.25$ $\gamma_{LL} := 1.35$

$$\phi M_{nmin} := \phi M_{nTS} = \left(1.1 \cdot 10^5\right)\ ft \cdot lbf$$

Use corresponding Values that govern Inventory Rating

$$DeadM_{min} := DeadM_{TS} = \left(9.98 \cdot 10^{3}\right)\ ft \cdot lbf$$

$$LiveM_{min} := LiveM_{TS} = \left(4.09 \cdot 10^{4}\right)\ ft \cdot lbf$$

$$RFHS20O := \frac{\phi M_{nmin} - \gamma_{DC} \cdot DeadM_{min}}{\gamma_{LL} \cdot LiveM_{min}} = 1.77$$

3S2

Inventory Rating: $\gamma_{DC} := 1.25$ $\gamma_{LL} := 1.75$

Moment Top Slab: $LiveM_{TS} := 37190 \cdot ft \cdot lbf$ Top Slab Live Load Moment

$$RFM_{TS} := \frac{\phi M_{nTS} - \gamma_{DC} \cdot DeadM_{TS}}{\gamma_{LL} \cdot LiveM_{TS}} = 1.5$$

Walls: $LiveM_{W} := 5030 \cdot ft \cdot lbf$ Wall Live Load Moment

$$RFM_{W} := \frac{\phi M_{nW} - \gamma_{DC} \cdot DeadM_{W}}{\gamma_{LL} \cdot LiveM_{W}} = 3.37$$

Shear Top Slab:

Top Slab: $LiveV_{TS} := 4610 \cdot lbf$ Top Slab Live Load Shear

$$RFV_{TS} := \frac{\phi V_{cTS} - \gamma_{DC} \cdot DeadV_{TS}}{\gamma_{LL} \cdot LiveV_{TS}} = 1.78$$

Walls: $LiveV_{W} := 670 \cdot lbf$ Wall Live Load Shear

$$RFV_{W} := \frac{\phi V_{cW} - \gamma_{DC} \cdot DeadV_{W}}{\gamma_{LL} \cdot LiveV_{W}} = 6.73$$

Inventory Rating:

$$RF3S2I_{MIN} := min\left(RFM_{TS}, RFM_{W}, RFV_{TS}, RFV_{W}\right) = 1.5$$

Operating Rating: $\gamma_{DC} := 1.25$ $\gamma_{LL} := 1.35$

Use corresponding Values that govern Inventory Rating

$$\phi M_{nmin} := \phi M_{nTS} = \left(1.1 \cdot 10^{5}\right)\ ft \cdot lbf$$

$$DeadM_{min} := DeadM_{TS} = \left(9.98 \cdot 10^{3}\right)\ ft \cdot lbf$$

$$LiveM_{min} := LiveM_{TS} = \left(3.72 \cdot 10^{4}\right)\ ft \cdot lbf$$

$$RF3S2O := \frac{\phi M_{nmin} - \gamma_{DC} \cdot DeadM_{min}}{\gamma_{LL} \cdot LiveM_{min}} = 1.94$$

6 AXLE TRAILER

Inventory Rating $\gamma_{DC} := 1.25$ $\gamma_{LL} := 1.75$

Moment

Top Slab; $LiveM_{TS} := 55360 \cdot ft \cdot lbf$ Top Slab Live Load Moment

$$RFM_{TS} := \frac{\phi M_{nTS} - \gamma_{DC} \cdot DeadM_{TS}}{\gamma_{LL} \cdot LiveM_{TS}} = 1.007$$

Walls; $LiveM_W := 5030 \cdot ft \cdot lbf$ Wall Live Load Moment

$$RFM_W := \frac{\phi M_{nW} - \gamma_{DC} \cdot DeadM_W}{\gamma_{LL} \cdot LiveM_W} = 3.373$$

Shear

Top Slab; $LiveV_{TS} := 7610 \cdot lbf$ Top Slab Live Load Shear

$$RFV_{TS} := \frac{\phi V_{cTS} - \gamma_{DC} \cdot DeadV_{TS}}{\gamma_{LL} \cdot LiveV_{TS}} = 1.08$$

Walls; $LiveV_W := 670 \cdot lbf$ Wall Live Load Shear

$$RFV_W := \frac{\phi V_{cW} - \gamma_{DC} \cdot DeadV_W}{\gamma_{LL} \cdot LiveV_W} = 6.73$$

Inventory Rating:

$$RF6axleI_{MIN} := min\left(RFM_{TS}, RFM_W, RFV_{TS}, RFV_W\right) = 1.01$$

Operating Rating: $\gamma_{DC} := 1.25$ $\gamma_{LL} := 1.35$

Use corresponding Values that govern Inventory Rating

$$\phi M_{nmin} := \phi M_{nTS} = \left(1.1 \cdot 10^5\right)\ ft \cdot lbf$$

$$DeadM_{min} := DeadM_{TS} = \left(9.98 \cdot 10^3\right)\ ft \cdot lbf$$

$$LiveM_{min} := LiveM_{TS} = \left(5.54 \cdot 10^4\right)\ ft \cdot lbf$$

$$RF6axleO := \frac{\phi M_{nmin} - \gamma_{DC} \cdot DeadM_{min}}{\gamma_{LL} \cdot LiveM_{min}} = 1.3$$

3 AXLE STRAIGHT

Inventory Rating: $\gamma_{DC} := 1.25$ $\gamma_{LL} := 1.75$

Moment Top Slab; $LiveM_{TS} := 49850 \cdot ft \cdot lbf$ Top Slab Live Load Moment

$$RFM_{TS} := \frac{\phi M_{nTS} - \gamma_{DC} \cdot DeadM_{TS}}{\gamma_{LL} \cdot LiveM_{TS}} = 1.12$$

Walls: $LiveM_W := 5030 \cdot ft \cdot lbf$ Wall Live Load Moment

$$RFM_W := \frac{\phi M_{nW} - \gamma_{DC} \cdot DeadM_W}{\gamma_{LL} \cdot LiveM_W} = 3.37$$

Shear

Top Slab: $LiveV_{TS} := 6500 \cdot lbf$ Top Slab Live Load Shear

$$RFV_{TS} := \frac{\phi V_{cTS} - \gamma_{DC} \cdot DeadV_{TS}}{\gamma_{LL} \cdot LiveV_{TS}} = 1.262$$

Walls: $LiveV_W := 670 \cdot lbf$ Wall Live Load Shear

$$RFV_W := \frac{\phi V_{cW} - \gamma_{DC} \cdot DeadV_W}{\gamma_{LL} \cdot LiveV_W} = 6.73$$

Inventory Rating:

$$RF3axleSI_{MIN} := min\left(RFM_{TS}, RFM_W, RFV_{TS}, RFV_W\right) = 1.12$$

Operating Rating: $\gamma_{DC} := 1.25$ $\gamma_{LL} := 1.35$

Use corresponding Values that govern Inventory Rating

$$\phi M_{nmin} := \phi M_{nTS} = \left(1.1 \cdot 10^5\right)\ ft \cdot lbf$$

$$DeadM_{min} := DeadM_{TS} = \left(9.98 \cdot 10^3\right)\ ft \cdot lbf$$

$$LiveM_{min} := LiveM_{TS} = \left(4.99 \cdot 10^4\right)\ ft \cdot lbf$$

$$RF3axleSO := \frac{\phi M_{nmin} - \gamma_{DC} \cdot DeadM_{min}}{\gamma_{LL} \cdot LiveM_{min}} = 1.45$$

4 AXLE STRAIGHT

Inventory Rating: $\gamma_{DC} := 1.25$ $\gamma_{LL} := 1.75$

Moment Top Slab: $LiveM_{TS} := 53020 \cdot ft \cdot lbf$ Top Slab Live Load Moment

$$RFM_{TS} := \frac{\phi M_{nTS} - \gamma_{DC} \cdot DeadM_{TS}}{\gamma_{LL} \cdot LiveM_{TS}} = 1.05$$

Walls: $LiveM_W := 5030 \cdot ft \cdot lbf$ Wall Live Load Moment

$$RFM_W := \frac{\phi M_{nW} - \gamma_{DC} \cdot DeadM_W}{\gamma_{LL} \cdot LiveM_W} = 3.37$$

Shear

Top Slab; $LiveV_{TS} := 7250 \cdot lbf$ Top Slab Live Load Shear

$$RFV_{TS} := \frac{\phi V_{cTS} - \gamma_{DC} \cdot DeadV_{TS}}{\gamma_{LL} \cdot LiveV_{TS}} = 1.13$$

Walls; $LiveV_W := 670 \cdot lbf$ Wall Live Load Shear

$$RFV_W := \frac{\phi V_{cW} - \gamma_{DC} \cdot DeadV_W}{\gamma_{LL} \cdot LiveV_W} = 6.73$$

Inventory Rating:

$$RF4axleSI_{MIN} := min\left(RFM_{TS}, RFM_W, RFV_{TS}, RFV_W\right) = 1.05$$

Operating Rating: $\gamma_{DC} := 1.25$ $\gamma_{LL} := 1.35$

Use corresponding Values that govern Inventory Rating

$$\phi M_{nmin} := \phi M_{nTS} = \left(1.1 \cdot 10^5\right)\ ft \cdot lbf$$

$$DeadM_{min} := DeadM_{TS} = \left(9.98 \cdot 10^3\right)\ ft \cdot lbf$$

$$LiveM_{min} := LiveM_{TS} = \left(5.3 \cdot 10^4\right)\ ft \cdot lbf$$

$$RF4axleSO := \frac{\phi M_{nmin} - \gamma_{DC} \cdot DeadM_{min}}{\gamma_{LL} \cdot LiveM_{min}} = 1.36$$

5 AXLE SEMI

Inventory Rating: $\gamma_{DC} := 1.25$ $\gamma_{LL} := 1.75$

Moment Top Slab; $LiveM_{TS} := 34010 \cdot ft \cdot lbf$ Top Slab Live Load Moment

$$RFM_{TS} := \frac{\phi M_{nTS} - \gamma_{DC} \cdot DeadM_{TS}}{\gamma_{LL} \cdot LiveM_{TS}} = 1.64$$

Walls; $LiveM_W := 5030 \cdot ft \cdot lbf$ Wall Live Load Moment

$$RFM_W := \frac{\phi M_{nW} - \gamma_{DC} \cdot DeadM_W}{\gamma_{LL} \cdot LiveM_W} = 3.37$$

Shear

Top Slab; $LiveV_{TS} := 5130 \cdot lbf$ Top Slab Live Load Shear

$$RFV_{TS} := \frac{\phi V_{cTS} - \gamma_{DC} \cdot DeadV_{TS}}{\gamma_{LL} \cdot LiveV_{TS}} = 1.6$$

Walls; $LiveV_W := 670 \cdot lbf$ Wall Live Load Shear

$$RFV_W := \frac{\phi V_{cW} - \gamma_{DC} \cdot DeadV_W}{\gamma_{LL} \cdot LiveV_W} = 6.73$$

Inventory Rating:

$$RFsASemiI_{MIN} := min\left(RFM_{TS}, RFM_W, RFV_{TS}, RFV_W\right) = 1.6$$

Operating Rating: $\gamma_{DC} := 1.25 \quad \gamma_{LL} := 1.35$

Use corresponding Values that govern Inventory Rating

$$\phi V_{cmin} := \phi V_{cTS} = \left(1.93 \cdot 10^4\right)\ lbf$$

$$DeadV_{min} := DeadV_{TS} = \left(3.97 \cdot 10^3\right)\ lbf$$

$$LiveV_{min} := LiveV_{TS} = \left(5.13 \cdot 10^3\right)\ lbf$$

$$RF5ASemiO := \frac{\phi V_{cmin} - \gamma_{DC} \cdot DeadV_{min}}{\gamma_{LL} \cdot LiveV_{min}} = 2.07$$

DESIGN LOAD: HL 93, H20, 3SC, 6AXLE STR, 3AXLE STR, 4AXLE STR, 5A SEMI

STATE PROJECT #: BRF 0302 (29) BRIDGE #: 6

LOAD RATING SUMMARY

- HL 93 TRUCK INVENTORY RATING $RFTrI_{MIN} = 1.17$
- HL 93 TRUCK OPERATING RATING $RFTrO = 1.51$
- HL 93 TANDEM INVENTORY RATING $RFTaI_{MIN} = 1.08$
- HL 93 TANDEM OPERATING RATING $RFTaO = 1.4$
- HS20 INVENTORY RATING $RFHS20I_{MIN} = 1.36$
- HS20 OPERATING RATING $RFHS20O = 1.77$
- 3S2 INVENTORY RATING $RF3S2I_{MIN} = 1.5$
- 3S2 OPERATING RATING $RF3S2O = 1.94$
- 6 Axle INVENTORY RATING $RF6axleI_{MIN} = 1.01$
- 6 Axle OPERATING RATING $RF6axleO = 1.3$
- 3 Axle Str. INVENTORY RATING $RF3axleSI_{MIN} = 1.12$
- 3 Axle Str. OPERATING RATING $RF3axleSO = 1.45$
- 4 Axle Str. INVENTORY RATING $RF4axleSI_{MIN} = 1.05$
- 4 Axle Str. OPERATING RATING $RF4axleSO = 1.36$
- 5 Axle Semi INVENTORY RATING $RFsASemiI_{MIN} = 1.6$
- 5 Axle Semi OPERATING RATING $RF5ASemiO = 2.07$

```
**************************************************
*                                                *
*           STAAD.Pro V8i SELECTseries5          *
*           Version  20.07.10.65                 *
*           Proprietary Program of               *
*           Bentley Systems, Inc.                *
*           Date=    MAR 17, 2015                *
*           Time=    14:13:29                    *
*                                                *
*      USER ID:                                  *
**************************************************
```

```
     1. STAAD PLANE
INPUT FILE: 26x10-LIVE-Fixed.STD
     2. START JOB INFORMATION
     3. ENGINEER DATE 03-17-15
     4. END JOB INFORMATION
     5. INPUT WIDTH 79
     6. UNIT FEET KIP
     7. JOINT COORDINATES
     8. 1 0 0 0; 2 0 10.666 0; 3 26.83 0 0; 4 26.83 10.666 0
     9. MEMBER INCIDENCES
    10. 1 1 2; 2 3 4; 3 2 4
    11. DEFINE MATERIAL START
    12. ISOTROPIC CONCRETE5000
    13. E 580390
    14. POISSON 0.17
    15. DENSITY 0.15
    16. ALPHA 5.5E-006
    17. DAMP 0.05
    18. END DEFINE MATERIAL
    19. MEMBER PROPERTY AMERICAN
    20. 1 2 PRIS YD 0.83 ZD 1
    21. 3 PRIS YD 1.33 ZD 1
    22. CONSTANTS
    23. MATERIAL CONCRETE5000 ALL
    24. SUPPORTS
    25. 1 FIXED BUT MZ
    26. 3 FIXED BUT FX MZ
    27. MEMBER OFFSET
    28. 3 START 0.415 0 0
    29. 3 END -0.415 0 0
    30. 1 END 0 -0.666 0
    31. 2 END 0 -0.666 0
    32. DEFINE MOVING LOAD
    33. ***HL93 TRUCK
    34. TYPE 1 LOAD 1.13 4.522 4.522
    35. DIST 14 14
    36. ***HL93 TANDEM
    37. TYPE 2 LOAD 3.532 3.532
    38. DIST 4
```

```
39. ***H20
40. TYPE 3 LOAD 1.13 4.522
41. DIST 14
42. ***3S2
43. TYPE 4 LOAD 1.13 2.26 2.26
44. DIST 11 4
45. ***6 AXLE TRAILER
46. TYPE 5 LOAD 2.83 2.83 2.83
47. DIST 4 4
48. ***3 AXLE STRAIGHT
49. TYPE 6 LOAD 1.7 3.39 3.39
50. DIST 15 4
51. ***4 AXLE STRAIGHT
52. TYPE 7 LOAD 1.7 2.68 2.68 2.68
53. DIST 15 4 4
54. ***5 AXLE SEMI
55. TYPE 8 LOAD 2.002 2.002 2.002 2.002
56. DIST 4 16 4
57. ***
58. LOAD 1 LOADTYPE NONE  TITLE LOAD CASE 1- UNIFORM LOAD
59. MEMBER LOAD
60. 3 UNI GY -0.106
61. SELFWEIGHT Y -1
62. LOAD 2 LOADTYPE LIVE  TITLE LANE LOAD
63. MEMBER LOAD
64. 3 UNI GY -0.064
65. ***
66. LOAD 3 LOADTYPE NONE  TITLE -IPF-WATER INSIDE
67. MEMBER LOAD
68. 2 TRAP GX 0.624 0
69. 1 TRAP GX -0.624 0
70. LOAD 4 LOADTYPE NONE  TITLE -EMAX
71. MEMBER LOAD
72. 1 TRAP GX 0.863 0.163
73. 2 TRAP GX -0.863 -0.163
74. LOAD 5 LOADTYPE NONE  TITLE -EMIN
75. MEMBER LOAD
76. 1 TRAP GX 0.432 0.082
77. 2 TRAP GX -0.432 -0.082
78. ***HL93 TRUCK
79. LOAD 10 LOADTYPE LIVE  TITLE LOAD CASE
80. LOAD GENERATION 8
81. TYPE 1 -28 10.666 0 XINC 3
82. ***HL93 TANDEM
83. LOAD 20 LOADTYPE LIVE  TITLE LOAD CASE
**WARNING-A MOVING LOAD THAT WOULD HAVE BEEN APPLIED BEYOND THE X AND Z RANGES
          OF THE STRUCTURE HAS BEEN IGNORED. CASE=   11 WHEEL   1 OF   3
**WARNING-A MOVING LOAD THAT WOULD HAVE BEEN APPLIED BEYOND THE X AND Z RANGES
          OF THE STRUCTURE HAS BEEN IGNORED. CASE=   11 WHEEL   2 OF   3
**WARNING-A MOVING LOAD THAT WOULD HAVE BEEN APPLIED BEYOND THE X AND Z RANGES
          OF THE STRUCTURE HAS BEEN IGNORED. CASE=   12 WHEEL   1 OF   3
**WARNING-A MOVING LOAD THAT WOULD HAVE BEEN APPLIED BEYOND THE X AND Z RANGES
          OF THE STRUCTURE HAS BEEN IGNORED. CASE=   12 WHEEL   2 OF   3
**WARNING-A MOVING LOAD THAT WOULD HAVE BEEN APPLIED BEYOND THE X AND Z RANGES
          OF THE STRUCTURE HAS BEEN IGNORED. CASE=   13 WHEEL   1 OF   3
```

```
**WARNING-A MOVING LOAD THAT WOULD HAVE BEEN APPLIED BEYOND THE X AND Z RANGES
          OF THE STRUCTURE HAS BEEN IGNORED. CASE=   13 WHEEL   2 OF   3
**WARNING-A MOVING LOAD THAT WOULD HAVE BEEN APPLIED BEYOND THE X AND Z RANGES
          OF THE STRUCTURE HAS BEEN IGNORED. CASE=   14 WHEEL   1 OF   3
**WARNING-A MOVING LOAD THAT WOULD HAVE BEEN APPLIED BEYOND THE X AND Z RANGES
          OF THE STRUCTURE HAS BEEN IGNORED. CASE=   14 WHEEL   2 OF   3
**WARNING-A MOVING LOAD THAT WOULD HAVE BEEN APPLIED BEYOND THE X AND Z RANGES
          OF THE STRUCTURE HAS BEEN IGNORED. CASE=   15 WHEEL   1 OF   3
**WARNING-A MOVING LOAD THAT WOULD HAVE BEEN APPLIED BEYOND THE X AND Z RANGES
          OF THE STRUCTURE HAS BEEN IGNORED. CASE=   15 WHEEL   2 OF   3
*ADDITIONAL MOVING LOAD MESSAGES SUPPRESSED
*ADDITIONAL MOVING LOAD MESSAGES SUPPRESSED
 84. LOAD GENERATION 6
 85. TYPE 2 -4 10.666 0 XINC 3
 86. ***H20
 87. LOAD 30 LOADTYPE LIVE  TITLE LOAD CASE
 88. LOAD GENERATION 6
 89. TYPE 3 -14 10.666 0 XINC 3
 90. ***3S2
 91. LOAD 40 LOADTYPE LIVE  TITLE LOAD CASE
 92. LOAD GENERATION 6
 93. TYPE 4 -15 10.666 0 XINC 3
 94. ***6 AXLE TRAILER
 95. LOAD 50 LOADTYPE LIVE  TITLE LOAD CASE
 96. LOAD GENERATION 7
 97. TYPE 5 -8 10.666 0 XINC 3
 98. ***3 AXLE STRAIGHT
 99. LOAD 60 LOADTYPE LIVE  TITLE LOAD CASE
100. LOAD GENERATION 8
101. TYPE 6 -19 10.666 0 XINC 3
102. ***4 AXLE STRAIGHT
103. LOAD 70 LOADTYPE LIVE  TITLE LOAD CASE
104. LOAD GENERATION 9
105. TYPE 7 -23 10.666 0 XINC 3
106. ***5 AXLE SEMI
107. LOAD 80 LOADTYPE LIVE  TITLE LOAD CASE
108. LOAD GENERATION 9
109. TYPE 8 -24 10.666 0 XINC 3
110. ***
111. LOAD COMB 100 COMBINATION LOAD CASE - 1.0DL+1.0EMIN- DEAD LOAD COMB
112. 1 1.0 5 1.0
113. ***
114. LOAD COMB 101 COMBINATION LOAD CASE - 1.0LL+1.0WIN+1.0EMIN- TRUCK
115. 11 1.0 2 1.0 3 1.0 5 1.0
116. LOAD COMB 102 COMBINATION LOAD CASE
117. 12 1.0 2 1.0 3 1.0 5 1.0
118. LOAD COMB 103 COMBINATION LOAD CASE
119. 13 1.0 2 1.0 3 1.0 5 1.0
120. LOAD COMB 104 COMBINATION LOAD CASE
121. 14 1.0 2 1.0 3 1.0 5 1.0
122. LOAD COMB 105 COMBINATION LOAD CASE
123. 15 1.0 2 1.0 3 1.0 5 1.0
124. LOAD COMB 106 COMBINATION LOAD CASE
125. 16 1.0 2 1.0 3 1.0 5 1.0
126. LOAD COMB 107 COMBINATION LOAD CASE
127. 17 1.0 2 1.0 3 1.0 5 1.0
```

```
128. LOAD COMB 108 COMBINATION LOAD CASE
129. 18 1.0 2 1.0 3 1.0 5 1.0
130. ***
131. LOAD COMB 201 COMBINATION LOAD CASE - 1.0LL+1.0WIN+1.0EMIN- TANDEM
132. 21 1.0 2 1.0 3 1.0 5 1.0
133. LOAD COMB 202 COMBINATION LOAD CASE
134. 22 1.0 2 1.0 3 1.0 5 1.0
135. LOAD COMB 203 COMBINATION LOAD CASE
136. 23 1.0 2 1.0 3 1.0 5 1.0
137. LOAD COMB 204 COMBINATION LOAD CASE
138. 24 1.0 2 1.0 3 1.0 5 1.0
139. LOAD COMB 205 COMBINATION LOAD CASE
140. 25 1.0 2 1.0 3 1.0 5 1.0
141. LOAD COMB 206 COMBINATION LOAD CASE
142. 26 1.0 2 1.0 3 1.0 5 1.0
143. LOAD COMB 301 COMBINATION LOAD CASE - 1.0LL+1.0WIN+1.0EMIN- HS20
144. 31 1.0 2 1.0 3 1.0 5 1.0
145. LOAD COMB 302 COMBINATION LOAD CASE
146. 32 1.0 2 1.0 3 1.0 5 1.0
147. LOAD COMB 303 COMBINATION LOAD CASE
148. 33 1.0 2 1.0 3 1.0 5 1.0
149. LOAD COMB 304 COMBINATION LOAD CASE
150. 34 1.0 2 1.0 3 1.0 5 1.0
151. LOAD COMB 305 COMBINATION LOAD CASE
152. 35 1.0 2 1.0 3 1.0 5 1.0
153. LOAD COMB 306 COMBINATION LOAD CASE
154. 36 1.0 2 1.0 3 1.0 5 1.0
155. LOAD COMB 401 COMBINATION LOAD CASE - 1.0LL+1.0WIN+1.0EMIN- 3S2
156. 41 1.0 2 1.0 3 1.0 5 1.0
157. LOAD COMB 402 COMBINATION LOAD CASE
158. 42 1.0 2 1.0 3 1.0 5 1.0
159. LOAD COMB 403 COMBINATION LOAD CASE
160. 43 1.0 2 1.0 3 1.0 5 1.0
161. LOAD COMB 404 COMBINATION LOAD CASE
162. 44 1.0 2 1.0 3 1.0 5 1.0
163. LOAD COMB 405 COMBINATION LOAD CASE
164. 45 1.0 2 1.0 3 1.0 5 1.0
165. LOAD COMB 406 COMBINATION LOAD CASE
166. 46 1.0 2 1.0 3 1.0 5 1.0
167. LOAD COMB 501 COMBINATION LOAD CASE - 1.0LL+1.0WIN+1.0EMIN- 6 AXLE TRAILER
168. 51 1.0 2 1.0 3 1.0 5 1.0
169. LOAD COMB 502 COMBINATION LOAD CASE
170. 52 1.0 2 1.0 3 1.0 5 1.0
171. LOAD COMB 503 COMBINATION LOAD CASE
172. 53 1.0 2 1.0 3 1.0 5 1.0
173. LOAD COMB 504 COMBINATION LOAD CASE
174. 54 1.0 2 1.0 3 1.0 5 1.0
175. LOAD COMB 505 COMBINATION LOAD CASE
176. 55 1.0 2 1.0 3 1.0 5 1.0
177. LOAD COMB 506 COMBINATION LOAD CASE
178. 56 1.0 2 1.0 3 1.0 5 1.0
179. LOAD COMB 507 COMBINATION LOAD CASE
180. 57 1.0 2 1.0 3 1.0 5 1.0
181. LOAD COMB 601 COMBINATION LOAD CASE - 1.0LL+1.0WIN+1.0EMIN- 3 AXLE STRAIGHT
182. 61 1.0 2 1.0 3 1.0 5 1.0
183. LOAD COMB 602 COMBINATION LOAD CASE
```

```
184. 62 1.0 2 1.0 3 1.0 5 1.0
185. LOAD COMB 603 COMBINATION LOAD CASE
186. 63 1.0 2 1.0 3 1.0 5 1.0
187. LOAD COMB 604 COMBINATION LOAD CASE
188. 64 1.0 2 1.0 3 1.0 5 1.0
189. LOAD COMB 605 COMBINATION LOAD CASE
190. 65 1.0 2 1.0 3 1.0 5 1.0
191. LOAD COMB 606 COMBINATION LOAD CASE
192. 66 1.0 2 1.0 3 1.0 5 1.0
193. LOAD COMB 607 COMBINATION LOAD CASE
194. 67 1.0 2 1.0 3 1.0 5 1.0
195. LOAD COMB 608 COMBINATION LOAD CASE
196. 68 1.0 2 1.0 3 1.0 5 1.0
197. ***
198. LOAD COMB 701 COMBINATION LOAD CASE - 1.0LL+1.0WIN+1.0EMIN- 4 AXLE STRAIGHT
199. 71 1.0 2 1.0 3 1.0 5 1.0
200. LOAD COMB 702 COMBINATION LOAD CASE
201. 72 1.0 2 1.0 3 1.0 5 1.0
202. LOAD COMB 703 COMBINATION LOAD CASE
203. 73 1.0 2 1.0 3 1.0 5 1.0
204. LOAD COMB 704 COMBINATION LOAD CASE
205. 74 1.0 2 1.0 3 1.0 5 1.0
206. LOAD COMB 705 COMBINATION LOAD CASE
207. 75 1.0 2 1.0 3 1.0 5 1.0
208. LOAD COMB 706 COMBINATION LOAD CASE
209. 76 1.0 2 1.0 3 1.0 5 1.0
210. LOAD COMB 707 COMBINATION LOAD CASE
211. 77 1.0 2 1.0 3 1.0 5 1.0
212. LOAD COMB 708 COMBINATION LOAD CASE
213. 78 1.0 2 1.0 3 1.0 5 1.0
214. LOAD COMB 709 COMBINATION LOAD CASE
215. 79 1.0 2 1.0 3 1.0 5 1.0
216. ***
217. LOAD COMB 801 COMBINATION LOAD CASE - 1.0LL+1.0WIN+1.0EMIN- 5 AXLE SEMI
218. 81 1.0 2 1.0 3 1.0 5 1.0
219. LOAD COMB 802 COMBINATION LOAD CASE
220. 82 1.0 2 1.0 3 1.0 5 1.0
221. LOAD COMB 803 COMBINATION LOAD CASE
222. 83 1.0 2 1.0 3 1.0 5 1.0
223. LOAD COMB 804 COMBINATION LOAD CASE
224. 84 1.0 2 1.0 3 1.0 5 1.0
225. LOAD COMB 805 COMBINATION LOAD CASE
226. 85 1.0 2 1.0 3 1.0 5 1.0
227. LOAD COMB 806 COMBINATION LOAD CASE
228. 86 1.0 2 1.0 3 1.0 5 1.0
229. LOAD COMB 807 COMBINATION LOAD CASE
230. 87 1.0 2 1.0 3 1.0 5 1.0
231. LOAD COMB 808 COMBINATION LOAD CASE
232. 88 1.0 2 1.0 3 1.0 5 1.0
233. LOAD COMB 809 COMBINATION LOAD CASE
234. 89 1.0 2 1.0 3 1.0 5 1.0
235. ***
236. PERFORM ANALYSIS
```

```
        P R O B L E M   S T A T I S T I C S
        -----------------------------------

  NUMBER OF JOINTS          4  NUMBER OF MEMBERS       3
  NUMBER OF PLATES          0  NUMBER OF SOLIDS        0
  NUMBER OF SURFACES        0  NUMBER OF SUPPORTS      2


       SOLVER USED IS THE OUT-OF-CORE BASIC SOLVER

  ORIGINAL/FINAL BAND-WIDTH=     2/     2/      8 DOF
TOTAL      PRIMARY LOAD CASES =    72, TOTAL DEGREES OF FREEDOM =       9
TOTAL LOAD COMBINATION  CASES =    60  SO FAR.
  SIZE OF STIFFNESS MATRIX =        1 DOUBLE  KILO-WORDS
  REQRD/AVAIL. DISK SPACE  =     12.0/      0.0 MB



237. LOAD LIST 100
238. PRINT FORCE ENVELOPE NSECTION 4 ALL
```

MEMBER FORCE ENVELOPE

ALL UNITS ARE KIP FEET

MEMB	DISTANCE		FY	LD	MZ	LD	FZ	LD	MY	LD
1	0.00	MAX	0.00	100	0.00	100	0.00	100	0.00	100
		MIN	0.00	100	0.00	100	0.00	100	0.00	100
	0.83	MAX	-0.35	100	0.15	100	0.00	100	0.00	100
		MIN	-0.35	100	0.15	100	0.00	100	0.00	100
	1.67	MAX	-0.67	100	0.57	100	0.00	100	0.00	100
		MIN	-0.67	100	0.57	100	0.00	100	0.00	100
	2.50	MAX	-0.97	100	1.26	100	0.00	100	0.00	100
		MIN	-0.97	100	1.26	100	0.00	100	0.00	100
	3.33	MAX	-1.25	100	2.18	100	0.00	100	0.00	100
		MIN	-1.25	100	2.18	100	0.00	100	0.00	100
	4.17	MAX	-1.50	100	3.33	100	0.00	100	0.00	100
		MIN	-1.50	100	3.33	100	0.00	100	0.00	100
	5.00	MAX	-1.72	100	4.67	100	0.00	100	0.00	100
		MIN	-1.72	100	4.67	100	0.00	100	0.00	100
	5.83	MAX	-1.92	100	6.19	100	0.00	100	0.00	100
		MIN	-1.92	100	6.19	100	0.00	100	0.00	100
	6.67	MAX	-2.10	100	7.87	100	0.00	100	0.00	100
		MIN	-2.10	100	7.87	100	0.00	100	0.00	100
	7.50	MAX	-2.26	100	9.69	100	0.00	100	0.00	100
		MIN	-2.26	100	9.69	100	0.00	100	0.00	100
	8.33	MAX	-2.38	100	11.62	100	0.00	100	0.00	100
		MIN	-2.38	100	11.62	100	0.00	100	0.00	100
	9.17	MAX	-2.49	100	13.66	100	0.00	100	0.00	100
		MIN	-2.49	100	13.66	100	0.00	100	0.00	100
	10.00	MAX	-2.57	100	15.77	100	0.00	100	0.00	100
		MIN	-2.57	100	15.77	100	0.00	100	0.00	100

MAX/MIN FORCE VALUES FOR MEMB 1, AMONGST ALL SECT LOCATIONS

	FY/ FZ	DIST DIST	LD LD	MZ/ MY	DIST DIST	LD LD	FX	DIST	LD
MAX.	0.00	0.00	100	15.77	10.00	100			
	0.00	0.00	100	0.00	0.00	100	5.22 C	0.00	100
MIN.	-2.57	10.00	100	0.00	0.00	100			
	0.00	10.00	100	0.00	10.00	100	3.97 C	10.00	100

2	0.00	MAX	0.00	100	0.00	100	0.00	100	0.00	100
		MIN	0.00	100	0.00	100	0.00	100	0.00	100
	0.83	MAX	0.35	100	-0.15	100	0.00	100	0.00	100
		MIN	0.35	100	-0.15	100	0.00	100	0.00	100

1.67	MAX	0.67	100	-0.57	100	0.00	100	0.00	100
	MIN	0.67	100	-0.57	100	0.00	100	0.00	100
2.50	MAX	0.97	100	-1.26	100	0.00	100	0.00	100
	MIN	0.97	100	-1.26	100	0.00	100	0.00	100
3.33	MAX	1.25	100	-2.18	100	0.00	100	0.00	100
	MIN	1.25	100	-2.18	100	0.00	100	0.00	100
4.17	MAX	1.50	100	-3.33	100	0.00	100	0.00	100
	MIN	1.50	100	-3.33	100	0.00	100	0.00	100
5.00	MAX	1.72	100	-4.67	100	0.00	100	0.00	100
	MIN	1.72	100	-4.67	100	0.00	100	0.00	100
5.83	MAX	1.92	100	-6.19	100	0.00	100	0.00	100
	MIN	1.92	100	-6.19	100	0.00	100	0.00	100
6.67	MAX	2.10	100	-7.87	100	0.00	100	0.00	100
	MIN	2.10	100	-7.87	100	0.00	100	0.00	100
7.50	MAX	2.26	100	-9.69	100	0.00	100	0.00	100
	MIN	2.26	100	-9.69	100	0.00	100	0.00	100
8.33	MAX	2.38	100	-11.62	100	0.00	100	0.00	100
	MIN	2.38	100	-11.62	100	0.00	100	0.00	100
9.17	MAX	2.49	100	-13.66	100	0.00	100	0.00	100
	MIN	2.49	100	-13.66	100	0.00	100	0.00	100
10.00	MAX	2.57	100	-15.77	100	0.00	100	0.00	100
	MIN	2.57	100	-15.77	100	0.00	100	0.00	100

MAX/MIN FORCE VALUES FOR MEMB 2, AMONGST ALL SECT LOCATIONS

	FY/ FZ	DIST DIST	LD LD	MZ/ MY	DIST DIST	LD LD	FX	DIST	LD
MAX.	2.57	10.00	100	0.00	0.00	100			
	0.00	0.00	100	0.00	0.00	100	5.22 C	0.00	100
MIN.	0.00	0.00	100	-15.77	10.00	100			
	0.00	10.00	100	0.00	10.00	100	3.97 C	10.00	100

3	0.00	MAX	3.97	100	15.83	100	0.00	100	0.00	100
		MIN	3.97	100	15.83	100	0.00	100	0.00	100
	2.17	MAX	3.31	100	7.94	100	0.00	100	0.00	100
		MIN	3.31	100	7.94	100	0.00	100	0.00	100
	4.33	MAX	2.65	100	1.49	100	0.00	100	0.00	100
		MIN	2.65	100	1.49	100	0.00	100	0.00	100
	6.50	MAX	1.99	100	-3.53	100	0.00	100	0.00	100
		MIN	1.99	100	-3.53	100	0.00	100	0.00	100
	8.67	MAX	1.32	100	-7.12	100	0.00	100	0.00	100
		MIN	1.32	100	-7.12	100	0.00	100	0.00	100
	10.83	MAX	0.66	100	-9.27	100	0.00	100	0.00	100
		MIN	0.66	100	-9.27	100	0.00	100	0.00	100
	13.00	MAX	0.00	100	-9.98	100	0.00	100	0.00	100
		MIN	0.00	100	-9.98	100	0.00	100	0.00	100
	15.17	MAX	-0.66	100	-9.27	100	0.00	100	0.00	100
		MIN	-0.66	100	-9.27	100	0.00	100	0.00	100
	17.33	MAX	-1.32	100	-7.12	100	0.00	100	0.00	100
		MIN	-1.32	100	-7.12	100	0.00	100	0.00	100
	19.50	MAX	-1.99	100	-3.53	100	0.00	100	0.00	100
		MIN	-1.99	100	-3.53	100	0.00	100	0.00	100

21.67	MAX	-2.65	100	1.49	100	0.00	100	0.00	100
	MIN	-2.65	100	1.49	100	0.00	100	0.00	100
23.83	MAX	-3.31	100	7.94	100	0.00	100	0.00	100
	MIN	-3.31	100	7.94	100	0.00	100	0.00	100
26.00	MAX	-3.97	100	15.83	100	0.00	100	0.00	100
	MIN	-3.97	100	15.83	100	0.00	100	0.00	100

MAX/MIN FORCE VALUES FOR MEMB 3, AMONGST ALL SECT LOCATIONS

	FY/ FZ	DIST DIST	LD LD	MZ/ MY	DIST DIST	LD LD	FX	DIST	LD
MAX.	3.97	0.00	100	15.83	0.00	100			
	0.00	0.00	100	0.00	0.00	100	2.57 C	0.00	100
MIN.	-3.97	26.00	100	-9.98	13.00	100			
	0.00	26.00	100	0.00	26.00	100	2.57 C	26.00	100

********** END OF FORCE ENVELOPE FROM INTERNAL STORAGE **********

239. LOAD LIST 101 TO 108
240. PRINT FORCE ENVELOPE NSECTION 4 ALL

MEMBER FORCE ENVELOPE

ALL UNITS ARE KIP FEET

MEMB	DISTANCE		FY	LD	MZ	LD	FZ	LD	MY	LD
1	0.00	MAX	0.00	108	0.00	108	0.00	108	0.00	108
		MIN	0.00	108	0.00	108	0.00	108	0.00	108
	0.83	MAX	0.15	108	-0.06	108	0.00	108	0.00	108
		MIN	0.15	108	-0.06	108	0.00	108	0.00	108
	1.67	MAX	0.28	108	-0.25	108	0.00	108	0.00	108
		MIN	0.28	108	-0.25	108	0.00	108	0.00	108
	2.50	MAX	0.39	108	-0.53	108	0.00	108	0.00	108
		MIN	0.39	108	-0.53	108	0.00	108	0.00	108
	3.33	MAX	0.49	108	-0.90	108	0.00	108	0.00	108
		MIN	0.49	108	-0.90	108	0.00	108	0.00	108
	4.17	MAX	0.56	108	-1.34	108	0.00	108	0.00	108
		MIN	0.56	108	-1.34	108	0.00	108	0.00	108
	5.00	MAX	0.62	108	-1.83	108	0.00	108	0.00	108
		MIN	0.62	108	-1.83	108	0.00	108	0.00	108
	5.83	MAX	0.65	108	-2.36	108	0.00	108	0.00	108
		MIN	0.65	108	-2.36	108	0.00	108	0.00	108
	6.67	MAX	0.67	108	-2.91	108	0.00	108	0.00	108
		MIN	0.67	108	-2.91	108	0.00	108	0.00	108
	7.50	MAX	0.67	108	-3.47	108	0.00	108	0.00	108
		MIN	0.67	108	-3.47	108	0.00	108	0.00	108
	8.33	MAX	0.65	108	-4.02	108	0.00	108	0.00	108
		MIN	0.65	108	-4.02	108	0.00	108	0.00	108
	9.17	MAX	0.61	108	-4.55	108	0.00	108	0.00	108
		MIN	0.61	108	-4.55	108	0.00	108	0.00	108
	10.00	MAX	0.55	108	-5.03	108	0.00	108	0.00	108
		MIN	0.55	108	-5.03	108	0.00	108	0.00	108

MAX/MIN FORCE VALUES FOR MEMB 1, AMONGST ALL SECT LOCATIONS

	FY/ FZ	DIST DIST	LD LD	MZ/ MY	DIST DIST	LD LD	FX	DIST	LD
MAX.	0.67	6.67	101	0.00	0.00	101			
	0.00	0.00	101	0.00	0.00	101	7.04 C	0.00	106
MIN.	0.00	0.00	108	-5.03	10.00	108			
	0.00	10.00	108	0.00	10.00	108	3.26 C	10.00	105

2	0.00	MAX	0.00	108	0.00	108	0.00	108	0.00	108
		MIN	0.00	108	0.00	108	0.00	108	0.00	108
	0.83	MAX	-0.15	108	0.06	108	0.00	108	0.00	108
		MIN	-0.15	108	0.06	108	0.00	108	0.00	108

1.67	MAX	-0.28	108	0.25	108	0.00	108	0.00	108
	MIN	-0.28	108	0.25	108	0.00	108	0.00	108
2.50	MAX	-0.39	108	0.53	108	0.00	108	0.00	108
	MIN	-0.39	108	0.53	108	0.00	108	0.00	108
3.33	MAX	-0.49	108	0.90	108	0.00	108	0.00	108
	MIN	-0.49	108	0.90	108	0.00	108	0.00	108
4.17	MAX	-0.56	108	1.34	108	0.00	108	0.00	108
	MIN	-0.56	108	1.34	108	0.00	108	0.00	108
5.00	MAX	-0.62	108	1.83	108	0.00	108	0.00	108
	MIN	-0.62	108	1.83	108	0.00	108	0.00	108
5.83	MAX	-0.65	108	2.36	108	0.00	108	0.00	108
	MIN	-0.65	108	2.36	108	0.00	108	0.00	108
6.67	MAX	-0.67	108	2.91	108	0.00	108	0.00	108
	MIN	-0.67	108	2.91	108	0.00	108	0.00	108
7.50	MAX	-0.67	108	3.47	108	0.00	108	0.00	108
	MIN	-0.67	108	3.47	108	0.00	108	0.00	108
8.33	MAX	-0.65	108	4.02	108	0.00	108	0.00	108
	MIN	-0.65	108	4.02	108	0.00	108	0.00	108
9.17	MAX	-0.61	108	4.55	108	0.00	108	0.00	108
	MIN	-0.61	108	4.55	108	0.00	108	0.00	108
10.00	MAX	-0.55	108	5.03	108	0.00	108	0.00	108
	MIN	-0.55	108	5.03	108	0.00	108	0.00	108

MAX/MIN FORCE VALUES FOR MEMB 2, AMONGST ALL SECT LOCATIONS

	FY/ FZ	DIST DIST	LD LD	MZ/ MY	DIST DIST	LD LD	FX	DIST	LD
MAX.	0.00	0.00	101	5.03	10.00	101			
	0.00	0.00	101	0.00	0.00	101	5.69 C	0.00	108
MIN.	-0.67	6.67	108	0.00	0.00	108			
	0.00	10.00	108	0.00	10.00	108	0.90 C	10.00	101

3	0.00	MAX	7.04	106	-6.75	105	0.00	108	0.00	108
		MIN	3.26	105	-8.32	106	0.00	108	0.00	108
	2.17	MAX	5.89	107	-9.10	101	0.00	108	0.00	108
		MIN	0.62	101	-20.81	107	0.00	108	0.00	108
	4.33	MAX	4.74	108	-10.30	101	0.00	108	0.00	108
		MIN	-0.02	102	-31.92	107	0.00	108	0.00	108
	6.50	MAX	4.60	108	-11.20	101	0.00	108	0.00	108
		MIN	-0.67	103	-38.74	108	0.00	108	0.00	108
	8.67	MAX	3.21	104	-11.80	101	0.00	108	0.00	108
		MIN	-0.80	103	-41.02	108	0.00	108	0.00	108
	10.83	MAX	2.57	105	-12.10	101	0.00	108	0.00	108
		MIN	-1.45	104	-40.74	108	0.00	108	0.00	108
	13.00	MAX	1.69	106	-12.10	101	0.00	108	0.00	108
		MIN	-2.09	105	-40.16	108	0.00	108	0.00	108
	15.17	MAX	0.54	107	-11.79	101	0.00	108	0.00	108
		MIN	-2.98	106	-42.91	106	0.00	108	0.00	108
	17.33	MAX	0.40	107	-11.19	101	0.00	108	0.00	108
		MIN	-3.11	106	-42.48	107	0.00	108	0.00	108
	19.50	MAX	-0.49	101	-10.29	101	0.00	108	0.00	108
		MIN	-4.26	107	-36.62	108	0.00	108	0.00	108

21.67	MAX	-0.63	101	-9.08	101	0.00	108	0.00	108
	MIN	-5.41	108	-31.82	108	0.00	108	0.00	108
23.83	MAX	-0.76	101	-7.58	101	0.00	108	0.00	108
	MIN	-5.55	108	-19.94	108	0.00	108	0.00	108
26.00	MAX	-0.90	101	-5.77	101	0.00	108	0.00	108
	MIN	-5.69	108	-7.76	108	0.00	108	0.00	108

MAX/MIN FORCE VALUES FOR MEMB 3, AMONGST ALL SECT LOCATIONS

	FY/ FZ	DIST DIST	LD LD	MZ/ MY	DIST DIST	LD LD	FX	DIST	LD
MAX.	7.04	0.00	106	-5.77	26.00	101			
	0.00	0.00	101	0.00	0.00	101	0.55 T	0.00	101
MIN.	-5.69	26.00	108	-42.91	15.17	106			
	0.00	26.00	108	0.00	26.00	108	0.55 T	26.00	108

********** END OF FORCE ENVELOPE FROM INTERNAL STORAGE **********

241. LOAD LIST 201 TO 206
242. PRINT FORCE ENVELOPE NSECTION 4 ALL

MEMBER FORCE ENVELOPE

ALL UNITS ARE KIP FEET

MEMB	DISTANCE		FY	LD	MZ	LD	FZ	LD	MY	LD
1	0.00	MAX	0.00	206	0.00	206	0.00	206	0.00	206
		MIN	0.00	206	0.00	206	0.00	206	0.00	206
	0.83	MAX	0.15	206	-0.06	206	0.00	206	0.00	206
		MIN	0.15	206	-0.06	206	0.00	206	0.00	206
	1.67	MAX	0.28	206	-0.25	206	0.00	206	0.00	206
		MIN	0.28	206	-0.25	206	0.00	206	0.00	206
	2.50	MAX	0.39	206	-0.53	206	0.00	206	0.00	206
		MIN	0.39	206	-0.53	206	0.00	206	0.00	206
	3.33	MAX	0.49	206	-0.90	206	0.00	206	0.00	206
		MIN	0.49	206	-0.90	206	0.00	206	0.00	206
	4.17	MAX	0.56	206	-1.34	206	0.00	206	0.00	206
		MIN	0.56	206	-1.34	206	0.00	206	0.00	206
	5.00	MAX	0.62	206	-1.83	206	0.00	206	0.00	206
		MIN	0.62	206	-1.83	206	0.00	206	0.00	206
	5.83	MAX	0.65	206	-2.36	206	0.00	206	0.00	206
		MIN	0.65	206	-2.36	206	0.00	206	0.00	206
	6.67	MAX	0.67	206	-2.91	206	0.00	206	0.00	206
		MIN	0.67	206	-2.91	206	0.00	206	0.00	206
	7.50	MAX	0.67	206	-3.47	206	0.00	206	0.00	206
		MIN	0.67	206	-3.47	206	0.00	206	0.00	206
	8.33	MAX	0.65	206	-4.02	206	0.00	206	0.00	206
		MIN	0.65	206	-4.02	206	0.00	206	0.00	206
	9.17	MAX	0.61	206	-4.55	206	0.00	206	0.00	206
		MIN	0.61	206	-4.55	206	0.00	206	0.00	206
	10.00	MAX	0.55	206	-5.03	206	0.00	206	0.00	206
		MIN	0.55	206	-5.03	206	0.00	206	0.00	206

MAX/MIN FORCE VALUES FOR MEMB 1, AMONGST ALL SECT LOCATIONS

	FY/ FZ	DIST DIST	LD LD	MZ/ MY	DIST DIST	LD LD	FX	DIST	LD
MAX.	0.67	6.67	201	0.00	0.00	201			
	0.00	0.00	201	0.00	0.00	201	6.73 C	0.00	203
MIN.	0.00	0.00	206	-5.03	10.00	206			
	0.00	10.00	206	0.00	10.00	206	3.91 C	10.00	202

2	0.00	MAX	0.00	206	0.00	206	0.00	206	0.00	206
		MIN	0.00	206	0.00	206	0.00	206	0.00	206
	0.83	MAX	-0.15	206	0.06	206	0.00	206	0.00	206
		MIN	-0.15	206	0.06	206	0.00	206	0.00	206

1.67	MAX	-0.28	206	0.25	206	0.00	206	0.00	206
	MIN	-0.28	206	0.25	206	0.00	206	0.00	206
2.50	MAX	-0.39	206	0.53	206	0.00	206	0.00	206
	MIN	-0.39	206	0.53	206	0.00	206	0.00	206
3.33	MAX	-0.49	206	0.90	206	0.00	206	0.00	206
	MIN	-0.49	206	0.90	206	0.00	206	0.00	206
4.17	MAX	-0.56	206	1.34	206	0.00	206	0.00	206
	MIN	-0.56	206	1.34	206	0.00	206	0.00	206
5.00	MAX	-0.62	206	1.83	206	0.00	206	0.00	206
	MIN	-0.62	206	1.83	206	0.00	206	0.00	206
5.83	MAX	-0.65	206	2.36	206	0.00	206	0.00	206
	MIN	-0.65	206	2.36	206	0.00	206	0.00	206
6.67	MAX	-0.67	206	2.91	206	0.00	206	0.00	206
	MIN	-0.67	206	2.91	206	0.00	206	0.00	206
7.50	MAX	-0.67	206	3.47	206	0.00	206	0.00	206
	MIN	-0.67	206	3.47	206	0.00	206	0.00	206
8.33	MAX	-0.65	206	4.02	206	0.00	206	0.00	206
	MIN	-0.65	206	4.02	206	0.00	206	0.00	206
9.17	MAX	-0.61	206	4.55	206	0.00	206	0.00	206
	MIN	-0.61	206	4.55	206	0.00	206	0.00	206
10.00	MAX	-0.55	206	5.03	206	0.00	206	0.00	206
	MIN	-0.55	206	5.03	206	0.00	206	0.00	206

MAX/MIN FORCE VALUES FOR MEMB 2, AMONGST ALL SECT LOCATIONS

	FY/ FZ	DIST DIST	LD LD	MZ/ MY	DIST DIST	LD LD	FX	DIST	LD
MAX.	0.00	0.00	201	5.03	10.00	201			
	0.00	0.00	201	0.00	0.00	201	4.36 C	0.00	206
MIN.	-0.67	6.67	206	0.00	0.00	206			
	0.00	10.00	206	0.00	10.00	206	0.89 C	10.00	201

3	0.00	MAX	6.73	203	-7.02	202	0.00	206	0.00	206
		MIN	3.91	202	-8.19	203	0.00	206	0.00	206
	2.17	MAX	5.81	204	-8.73	201	0.00	206	0.00	206
		MIN	0.64	201	-22.04	203	0.00	206	0.00	206
	4.33	MAX	5.67	204	-9.96	201	0.00	206	0.00	206
		MIN	0.11	202	-33.02	204	0.00	206	0.00	206
	6.50	MAX	4.74	205	-10.90	201	0.00	206	0.00	206
		MIN	-0.75	203	-39.85	204	0.00	206	0.00	206
	8.67	MAX	3.81	206	-11.53	201	0.00	206	0.00	206
		MIN	-0.89	203	-47.45	205	0.00	206	0.00	206
	10.83	MAX	3.67	206	-11.86	201	0.00	206	0.00	206
		MIN	-1.81	204	-50.73	206	0.00	206	0.00	206
	13.00	MAX	0.00	206	-11.89	201	0.00	206	0.00	206
		MIN	-2.74	205	-51.47	206	0.00	206	0.00	206
	15.17	MAX	-0.19	201	-11.62	201	0.00	206	0.00	206
		MIN	-3.67	206	-50.73	206	0.00	206	0.00	206
	17.33	MAX	-0.33	201	-11.05	201	0.00	206	0.00	206
		MIN	-3.81	206	-42.63	206	0.00	206	0.00	206
	19.50	MAX	-0.47	201	-10.18	201	0.00	206	0.00	206
		MIN	-3.95	206	-34.22	206	0.00	206	0.00	206

21.67	MAX	-0.61	201	-9.01	201	0.00	206	0.00	206
	MIN	-4.09	206	-25.52	206	0.00	206	0.00	206
23.83	MAX	-0.75	201	-7.54	201	0.00	206	0.00	206
	MIN	-4.23	206	-16.52	206	0.00	206	0.00	206
26.00	MAX	-0.89	201	-5.77	201	0.00	206	0.00	206
	MIN	-4.36	206	-7.21	206	0.00	206	0.00	206

MAX/MIN FORCE VALUES FOR MEMB 3, AMONGST ALL SECT LOCATIONS

	FY/ FZ	DIST DIST	LD LD	MZ/ MY	DIST DIST	LD LD	FX	DIST	LD
MAX.	6.73	0.00	203	-5.77	26.00	201			
	0.00	0.00	201	0.00	0.00	201	0.55 T	0.00	201
MIN.	-4.36	26.00	206	-51.47	13.00	206			
	0.00	26.00	206	0.00	26.00	206	0.55 T	26.00	206

********** END OF FORCE ENVELOPE FROM INTERNAL STORAGE **********

243. LOAD LIST 301 TO 306
244. PRINT FORCE ENVELOPE NSECTION 4 ALL

MEMBER FORCE ENVELOPE

ALL UNITS ARE KIP FEET

MEMB	DISTANCE		FY	LD	MZ	LD	FZ	LD	MY	LD
1	0.00	MAX	0.00	306	0.00	306	0.00	306	0.00	306
		MIN	0.00	306	0.00	306	0.00	306	0.00	306
	0.83	MAX	0.15	306	-0.06	306	0.00	306	0.00	306
		MIN	0.15	306	-0.06	306	0.00	306	0.00	306
	1.67	MAX	0.28	306	-0.25	306	0.00	306	0.00	306
		MIN	0.28	306	-0.25	306	0.00	306	0.00	306
	2.50	MAX	0.39	306	-0.53	306	0.00	306	0.00	306
		MIN	0.39	306	-0.53	306	0.00	306	0.00	306
	3.33	MAX	0.49	306	-0.90	306	0.00	306	0.00	306
		MIN	0.49	306	-0.90	306	0.00	306	0.00	306
	4.17	MAX	0.56	306	-1.34	306	0.00	306	0.00	306
		MIN	0.56	306	-1.34	306	0.00	306	0.00	306
	5.00	MAX	0.62	306	-1.83	306	0.00	306	0.00	306
		MIN	0.62	306	-1.83	306	0.00	306	0.00	306
	5.83	MAX	0.65	306	-2.36	306	0.00	306	0.00	306
		MIN	0.65	306	-2.36	306	0.00	306	0.00	306
	6.67	MAX	0.67	306	-2.91	306	0.00	306	0.00	306
		MIN	0.67	306	-2.91	306	0.00	306	0.00	306
	7.50	MAX	0.67	306	-3.47	306	0.00	306	0.00	306
		MIN	0.67	306	-3.47	306	0.00	306	0.00	306
	8.33	MAX	0.65	306	-4.02	306	0.00	306	0.00	306
		MIN	0.65	306	-4.02	306	0.00	306	0.00	306
	9.17	MAX	0.61	306	-4.55	306	0.00	306	0.00	306
		MIN	0.61	306	-4.55	306	0.00	306	0.00	306
	10.00	MAX	0.55	306	-5.03	306	0.00	306	0.00	306
		MIN	0.55	306	-5.03	306	0.00	306	0.00	306

MAX/MIN FORCE VALUES FOR MEMB 1, AMONGST ALL SECT LOCATIONS

	FY/ FZ	DIST DIST	LD LD	MZ/ MY	DIST DIST	LD LD	FX	DIST	LD
MAX.	0.67	6.67	301	0.00	0.00	301			
	0.00	0.00	301	0.00	0.00	301	5.28 C	0.00	301
MIN.	0.00	0.00	306	-5.03	10.00	306			
	0.00	10.00	306	0.00	10.00	306	3.26 C	10.00	305

2	0.00	MAX	0.00	306	0.00	306	0.00	306	0.00	306
		MIN	0.00	306	0.00	306	0.00	306	0.00	306
	0.83	MAX	-0.15	306	0.06	306	0.00	306	0.00	306
		MIN	-0.15	306	0.06	306	0.00	306	0.00	306

1.67	MAX	-0.28	306	0.25	306	0.00	306	0.00	306
	MIN	-0.28	306	0.25	306	0.00	306	0.00	306
2.50	MAX	-0.39	306	0.53	306	0.00	306	0.00	306
	MIN	-0.39	306	0.53	306	0.00	306	0.00	306
3.33	MAX	-0.49	306	0.90	306	0.00	306	0.00	306
	MIN	-0.49	306	0.90	306	0.00	306	0.00	306
4.17	MAX	-0.56	306	1.34	306	0.00	306	0.00	306
	MIN	-0.56	306	1.34	306	0.00	306	0.00	306
5.00	MAX	-0.62	306	1.83	306	0.00	306	0.00	306
	MIN	-0.62	306	1.83	306	0.00	306	0.00	306
5.83	MAX	-0.65	306	2.36	306	0.00	306	0.00	306
	MIN	-0.65	306	2.36	306	0.00	306	0.00	306
6.67	MAX	-0.67	306	2.91	306	0.00	306	0.00	306
	MIN	-0.67	306	2.91	306	0.00	306	0.00	306
7.50	MAX	-0.67	306	3.47	306	0.00	306	0.00	306
	MIN	-0.67	306	3.47	306	0.00	306	0.00	306
8.33	MAX	-0.65	306	4.02	306	0.00	306	0.00	306
	MIN	-0.65	306	4.02	306	0.00	306	0.00	306
9.17	MAX	-0.61	306	4.55	306	0.00	306	0.00	306
	MIN	-0.61	306	4.55	306	0.00	306	0.00	306
10.00	MAX	-0.55	306	5.03	306	0.00	306	0.00	306
	MIN	-0.55	306	5.03	306	0.00	306	0.00	306

MAX/MIN FORCE VALUES FOR MEMB 2, AMONGST ALL SECT LOCATIONS

	FY/ FZ	DIST DIST	LD LD	MZ/ MY	DIST DIST	LD LD	FX	DIST	LD
MAX.	0.00	0.00	301	5.03	10.00	301			
	0.00	0.00	301	0.00	0.00	301	3.49 C	0.00	306
MIN.	-0.67	6.67	306	0.00	0.00	306			
	0.00	10.00	306	0.00	10.00	306	0.90 C	10.00	301

3	0.00	MAX	5.28	301	-6.75	305	0.00	306	0.00	306
		MIN	3.26	305	-7.59	301	0.00	306	0.00	306
	2.17	MAX	4.64	302	-9.10	301	0.00	306	0.00	306
		MIN	0.62	301	-17.59	302	0.00	306	0.00	306
	4.33	MAX	4.00	303	-10.30	301	0.00	306	0.00	306
		MIN	-0.02	302	-25.09	303	0.00	306	0.00	306
	6.50	MAX	3.35	304	-11.20	301	0.00	306	0.00	306
		MIN	-0.67	303	-31.33	303	0.00	306	0.00	306
	8.67	MAX	3.21	304	-11.80	301	0.00	306	0.00	306
		MIN	-0.80	303	-37.21	304	0.00	306	0.00	306
	10.83	MAX	2.57	305	-12.10	301	0.00	306	0.00	306
		MIN	-1.45	304	-38.33	305	0.00	306	0.00	306
	13.00	MAX	1.86	306	-12.10	301	0.00	306	0.00	306
		MIN	-2.09	305	-39.22	305	0.00	306	0.00	306
	15.17	MAX	-0.21	301	-11.79	301	0.00	306	0.00	306
		MIN	-2.80	306	-40.90	306	0.00	306	0.00	306
	17.33	MAX	-0.35	301	-11.19	301	0.00	306	0.00	306
		MIN	-2.94	306	-34.69	306	0.00	306	0.00	306
	19.50	MAX	-0.49	301	-10.29	301	0.00	306	0.00	306
		MIN	-3.07	306	-28.18	306	0.00	306	0.00	306

21.67	MAX	-0.63	301	-9.08	301	0.00	306	0.00	306
	MIN	-3.21	306	-21.37	306	0.00	306	0.00	306
23.83	MAX	-0.76	301	-7.58	301	0.00	306	0.00	306
	MIN	-3.35	306	-14.26	306	0.00	306	0.00	306
26.00	MAX	-0.90	301	-5.77	301	0.00	306	0.00	306
	MIN	-3.49	306	-6.85	306	0.00	306	0.00	306

MAX/MIN FORCE VALUES FOR MEMB 3, AMONGST ALL SECT LOCATIONS

	FY/ FZ	DIST DIST	LD LD	MZ/ MY	DIST DIST	LD LD	FX	DIST	LD
MAX.	5.28	0.00	301	-5.77	26.00	301			
	0.00	0.00	301	0.00	0.00	301	0.55 T	0.00	301
MIN.	-3.49	26.00	306	-40.90	15.17	306			
	0.00	26.00	306	0.00	26.00	306	0.55 T	26.00	306

********** END OF FORCE ENVELOPE FROM INTERNAL STORAGE **********

245. LOAD LIST 401 TO 406
246. PRINT FORCE ENVELOPE NSECTION 4 ALL

MEMBER FORCE ENVELOPE

ALL UNITS ARE KIP FEET

MEMB	DISTANCE		FY	LD	MZ	LD	FZ	LD	MY	LD
1	0.00	MAX	0.00	406	0.00	406	0.00	406	0.00	406
		MIN	0.00	406	0.00	406	0.00	406	0.00	406
	0.83	MAX	0.15	406	-0.06	406	0.00	406	0.00	406
		MIN	0.15	406	-0.06	406	0.00	406	0.00	406
	1.67	MAX	0.28	406	-0.25	406	0.00	406	0.00	406
		MIN	0.28	406	-0.25	406	0.00	406	0.00	406
	2.50	MAX	0.39	406	-0.53	406	0.00	406	0.00	406
		MIN	0.39	406	-0.53	406	0.00	406	0.00	406
	3.33	MAX	0.49	406	-0.90	406	0.00	406	0.00	406
		MIN	0.49	406	-0.90	406	0.00	406	0.00	406
	4.17	MAX	0.56	406	-1.34	406	0.00	406	0.00	406
		MIN	0.56	406	-1.34	406	0.00	406	0.00	406
	5.00	MAX	0.62	406	-1.83	406	0.00	406	0.00	406
		MIN	0.62	406	-1.83	406	0.00	406	0.00	406
	5.83	MAX	0.65	406	-2.36	406	0.00	406	0.00	406
		MIN	0.65	406	-2.36	406	0.00	406	0.00	406
	6.67	MAX	0.67	406	-2.91	406	0.00	406	0.00	406
		MIN	0.67	406	-2.91	406	0.00	406	0.00	406
	7.50	MAX	0.67	406	-3.47	406	0.00	406	0.00	406
		MIN	0.67	406	-3.47	406	0.00	406	0.00	406
	8.33	MAX	0.65	406	-4.02	406	0.00	406	0.00	406
		MIN	0.65	406	-4.02	406	0.00	406	0.00	406
	9.17	MAX	0.61	406	-4.55	406	0.00	406	0.00	406
		MIN	0.61	406	-4.55	406	0.00	406	0.00	406
	10.00	MAX	0.55	406	-5.03	406	0.00	406	0.00	406
		MIN	0.55	406	-5.03	406	0.00	406	0.00	406

MAX/MIN FORCE VALUES FOR MEMB 1, AMONGST ALL SECT LOCATIONS

	FY/ FZ	DIST DIST	LD LD	MZ/ MY	DIST DIST	LD LD	FX	DIST	LD
MAX.	0.67	6.67	401	0.00	0.00	401			
	0.00	0.00	401	0.00	0.00	401	4.61 C	0.00	403
MIN.	0.00	0.00	406	-5.03	10.00	406			
	0.00	10.00	406	0.00	10.00	406	2.80 C	10.00	402

2	0.00	MAX	0.00	406	0.00	406	0.00	406	0.00	406
		MIN	0.00	406	0.00	406	0.00	406	0.00	406
	0.83	MAX	-0.15	406	0.06	406	0.00	406	0.00	406
		MIN	-0.15	406	0.06	406	0.00	406	0.00	406

1.67	MAX	-0.28	406	0.25	406	0.00	406	0.00	406
	MIN	-0.28	406	0.25	406	0.00	406	0.00	406
2.50	MAX	-0.39	406	0.53	406	0.00	406	0.00	406
	MIN	-0.39	406	0.53	406	0.00	406	0.00	406
3.33	MAX	-0.49	406	0.90	406	0.00	406	0.00	406
	MIN	-0.49	406	0.90	406	0.00	406	0.00	406
4.17	MAX	-0.56	406	1.34	406	0.00	406	0.00	406
	MIN	-0.56	406	1.34	406	0.00	406	0.00	406
5.00	MAX	-0.62	406	1.83	406	0.00	406	0.00	406
	MIN	-0.62	406	1.83	406	0.00	406	0.00	406
5.83	MAX	-0.65	406	2.36	406	0.00	406	0.00	406
	MIN	-0.65	406	2.36	406	0.00	406	0.00	406
6.67	MAX	-0.67	406	2.91	406	0.00	406	0.00	406
	MIN	-0.67	406	2.91	406	0.00	406	0.00	406
7.50	MAX	-0.67	406	3.47	406	0.00	406	0.00	406
	MIN	-0.67	406	3.47	406	0.00	406	0.00	406
8.33	MAX	-0.65	406	4.02	406	0.00	406	0.00	406
	MIN	-0.65	406	4.02	406	0.00	406	0.00	406
9.17	MAX	-0.61	406	4.55	406	0.00	406	0.00	406
	MIN	-0.61	406	4.55	406	0.00	406	0.00	406
10.00	MAX	-0.55	406	5.03	406	0.00	406	0.00	406
	MIN	-0.55	406	5.03	406	0.00	406	0.00	406

MAX/MIN FORCE VALUES FOR MEMB 2, AMONGST ALL SECT LOCATIONS

	FY/ FZ	DIST DIST	LD LD	MZ/ MY	DIST DIST	LD LD	FX	DIST	LD
MAX.	0.00	0.00	401	5.03	10.00	401			
	0.00	0.00	401	0.00	0.00	401	3.11 C	0.00	406
MIN.	-0.67	6.67	406	0.00	0.00	406			
	0.00	10.00	406	0.00	10.00	406	0.87 C	10.00	401

3	0.00	MAX	4.61	403	-6.56	402	0.00	406	0.00	406
		MIN	2.80	402	-7.31	403	0.00	406	0.00	406
	2.17	MAX	3.96	404	-8.25	401	0.00	406	0.00	406
		MIN	0.66	401	-16.77	403	0.00	406	0.00	406
	4.33	MAX	3.83	404	-9.53	401	0.00	406	0.00	406
		MIN	0.27	402	-24.28	404	0.00	406	0.00	406
	6.50	MAX	3.18	405	-10.50	401	0.00	406	0.00	406
		MIN	-0.33	403	-29.03	404	0.00	406	0.00	406
	8.67	MAX	2.52	406	-11.18	401	0.00	406	0.00	406
		MIN	-0.47	403	-34.16	405	0.00	406	0.00	406
	10.83	MAX	2.38	406	-11.55	401	0.00	406	0.00	406
		MIN	-1.11	404	-36.70	406	0.00	406	0.00	406
	13.00	MAX	-0.02	406	-11.62	401	0.00	406	0.00	406
		MIN	-1.75	405	-37.19	406	0.00	406	0.00	406
	15.17	MAX	-0.17	401	-11.40	401	0.00	406	0.00	406
		MIN	-2.42	406	-36.62	406	0.00	406	0.00	406
	17.33	MAX	-0.31	401	-10.87	401	0.00	406	0.00	406
		MIN	-2.55	406	-31.24	406	0.00	406	0.00	406
	19.50	MAX	-0.45	401	-10.04	401	0.00	406	0.00	406
		MIN	-2.69	406	-25.55	406	0.00	406	0.00	406

21.67	MAX	-0.59	401	-8.92	401	0.00	406	0.00	406
	MIN	-2.83	406	-19.56	406	0.00	406	0.00	406
23.83	MAX	-0.73	401	-7.49	401	0.00	406	0.00	406
	MIN	-2.97	406	-13.28	406	0.00	406	0.00	406
26.00	MAX	-0.87	401	-5.76	401	0.00	406	0.00	406
	MIN	-3.11	406	-6.69	406	0.00	406	0.00	406

MAX/MIN FORCE VALUES FOR MEMB 3, AMONGST ALL SECT LOCATIONS

	FY/ FZ	DIST DIST	LD LD	MZ/ MY	DIST DIST	LD LD	FX	DIST	LD
MAX.	4.61	0.00	403	-5.76	26.00	401			
	0.00	0.00	401	0.00	0.00	401	0.55 T	0.00	401
MIN.	-3.11	26.00	406	-37.19	13.00	406			
	0.00	26.00	406	0.00	26.00	406	0.55 T	26.00	406

********** END OF FORCE ENVELOPE FROM INTERNAL STORAGE **********

247. LOAD LIST 501 TO 507
248. PRINT FORCE ENVELOPE NSECTION 4 ALL

MEMBER FORCE ENVELOPE

ALL UNITS ARE KIP FEET

MEMB	DISTANCE		FY	LD	MZ	LD	FZ	LD	MY	LD
1	0.00	MAX	0.00	507	0.00	507	0.00	507	0.00	507
		MIN	0.00	507	0.00	507	0.00	507	0.00	507
	0.83	MAX	0.15	507	-0.06	507	0.00	507	0.00	507
		MIN	0.15	507	-0.06	507	0.00	507	0.00	507
	1.67	MAX	0.28	507	-0.25	507	0.00	507	0.00	507
		MIN	0.28	507	-0.25	507	0.00	507	0.00	507
	2.50	MAX	0.39	507	-0.53	507	0.00	507	0.00	507
		MIN	0.39	507	-0.53	507	0.00	507	0.00	507
	3.33	MAX	0.49	507	-0.90	507	0.00	507	0.00	507
		MIN	0.49	507	-0.90	507	0.00	507	0.00	507
	4.17	MAX	0.56	507	-1.34	507	0.00	507	0.00	507
		MIN	0.56	507	-1.34	507	0.00	507	0.00	507
	5.00	MAX	0.62	507	-1.83	507	0.00	507	0.00	507
		MIN	0.62	507	-1.83	507	0.00	507	0.00	507
	5.83	MAX	0.65	507	-2.36	507	0.00	507	0.00	507
		MIN	0.65	507	-2.36	507	0.00	507	0.00	507
	6.67	MAX	0.67	507	-2.91	507	0.00	507	0.00	507
		MIN	0.67	507	-2.91	507	0.00	507	0.00	507
	7.50	MAX	0.67	507	-3.47	507	0.00	507	0.00	507
		MIN	0.67	507	-3.47	507	0.00	507	0.00	507
	8.33	MAX	0.65	507	-4.02	507	0.00	507	0.00	507
		MIN	0.65	507	-4.02	507	0.00	507	0.00	507
	9.17	MAX	0.61	507	-4.55	507	0.00	507	0.00	507
		MIN	0.61	507	-4.55	507	0.00	507	0.00	507
	10.00	MAX	0.55	507	-5.03	507	0.00	507	0.00	507
		MIN	0.55	507	-5.03	507	0.00	507	0.00	507

MAX/MIN FORCE VALUES FOR MEMB 1, AMONGST ALL SECT LOCATIONS

	FY/ FZ	DIST DIST	LD LD	MZ/ MY	DIST DIST	LD LD	FX	DIST	LD
MAX.	0.67	6.67	501	0.00	0.00	501			
	0.00	0.00	501	0.00	0.00	501	7.61 C	0.00	504
MIN.	0.00	0.00	507	-5.03	10.00	507			
	0.00	10.00	507	0.00	10.00	507	3.30 C	10.00	502

2	0.00	MAX	0.00	507	0.00	507	0.00	507	0.00	507
		MIN	0.00	507	0.00	507	0.00	507	0.00	507
	0.83	MAX	-0.15	507	0.06	507	0.00	507	0.00	507
		MIN	-0.15	507	0.06	507	0.00	507	0.00	507

1.67	MAX	-0.28	507	0.25	507	0.00	507	0.00	507
	MIN	-0.28	507	0.25	507	0.00	507	0.00	507
2.50	MAX	-0.39	507	0.53	507	0.00	507	0.00	507
	MIN	-0.39	507	0.53	507	0.00	507	0.00	507
3.33	MAX	-0.49	507	0.90	507	0.00	507	0.00	507
	MIN	-0.49	507	0.90	507	0.00	507	0.00	507
4.17	MAX	-0.56	507	1.34	507	0.00	507	0.00	507
	MIN	-0.56	507	1.34	507	0.00	507	0.00	507
5.00	MAX	-0.62	507	1.83	507	0.00	507	0.00	507
	MIN	-0.62	507	1.83	507	0.00	507	0.00	507
5.83	MAX	-0.65	507	2.36	507	0.00	507	0.00	507
	MIN	-0.65	507	2.36	507	0.00	507	0.00	507
6.67	MAX	-0.67	507	2.91	507	0.00	507	0.00	507
	MIN	-0.67	507	2.91	507	0.00	507	0.00	507
7.50	MAX	-0.67	507	3.47	507	0.00	507	0.00	507
	MIN	-0.67	507	3.47	507	0.00	507	0.00	507
8.33	MAX	-0.65	507	4.02	507	0.00	507	0.00	507
	MIN	-0.65	507	4.02	507	0.00	507	0.00	507
9.17	MAX	-0.61	507	4.55	507	0.00	507	0.00	507
	MIN	-0.61	507	4.55	507	0.00	507	0.00	507
10.00	MAX	-0.55	507	5.03	507	0.00	507	0.00	507
	MIN	-0.55	507	5.03	507	0.00	507	0.00	507

MAX/MIN FORCE VALUES FOR MEMB 2, AMONGST ALL SECT LOCATIONS

	FY/ FZ	DIST DIST	LD LD	MZ/ MY	DIST DIST	LD LD	FX	DIST	LD
MAX.	0.00	0.00	501	5.03	10.00	501			
	0.00	0.00	501	0.00	0.00	501	5.39 C	0.00	507
MIN.	-0.67	6.67	507	0.00	0.00	507			
	0.00	10.00	507	0.00	10.00	507	0.88 C	10.00	501

3	0.00	MAX	7.61	504	-6.77	502	0.00	507	0.00	507
		MIN	3.30	502	-8.56	504	0.00	507	0.00	507
	2.17	MAX	6.52	505	-8.47	501	0.00	507	0.00	507
		MIN	0.65	501	-22.44	505	0.00	507	0.00	507
	4.33	MAX	5.43	506	-9.72	501	0.00	507	0.00	507
		MIN	0.19	502	-35.48	505	0.00	507	0.00	507
	6.50	MAX	5.29	506	-10.68	501	0.00	507	0.00	507
		MIN	-0.52	503	-43.53	506	0.00	507	0.00	507
	8.67	MAX	4.21	507	-11.33	501	0.00	507	0.00	507
		MIN	-0.65	503	-50.13	506	0.00	507	0.00	507
	10.83	MAX	2.19	506	-11.69	501	0.00	507	0.00	507
		MIN	-1.57	504	-55.02	506	0.00	507	0.00	507
	13.00	MAX	1.10	507	-11.74	501	0.00	507	0.00	507
		MIN	-2.66	505	-55.36	507	0.00	507	0.00	507
	15.17	MAX	-0.18	501	-11.50	501	0.00	507	0.00	507
		MIN	-3.75	506	-54.29	507	0.00	507	0.00	507
	17.33	MAX	-0.32	501	-10.95	501	0.00	507	0.00	507
		MIN	-3.89	506	-50.09	507	0.00	507	0.00	507
	19.50	MAX	-0.46	501	-10.11	501	0.00	507	0.00	507
		MIN	-4.98	507	-41.34	507	0.00	507	0.00	507

21.67	MAX	-0.60	501	-8.96	501	0.00	507	0.00	507
	MIN	-5.12	507	-30.41	507	0.00	507	0.00	507
23.83	MAX	-0.74	501	-7.51	501	0.00	507	0.00	507
	MIN	-5.25	507	-19.17	507	0.00	507	0.00	507
26.00	MAX	-0.88	501	-5.76	501	0.00	507	0.00	507
	MIN	-5.39	507	-7.64	507	0.00	507	0.00	507

MAX/MIN FORCE VALUES FOR MEMB 3, AMONGST ALL SECT LOCATIONS

	FY/ FZ	DIST DIST	LD LD	MZ/ MY	DIST DIST	LD LD	FX	DIST	LD
MAX.	7.61	0.00	504	-5.76	26.00	501			
	0.00	0.00	501	0.00	0.00	501	0.55 T	0.00	501
MIN.	-5.39	26.00	507	-55.36	13.00	507			
	0.00	26.00	507	0.00	26.00	507	0.55 T	26.00	507

********** END OF FORCE ENVELOPE FROM INTERNAL STORAGE **********

249. LOAD LIST 601 TO 608
250. PRINT FORCE ENVELOPE NSECTION 4 ALL

MEMBER FORCE ENVELOPE

ALL UNITS ARE KIP FEET

MEMB	DISTANCE		FY	LD	MZ	LD	FZ	LD	MY	LD
1	0.00	MAX	0.00	608	0.00	608	0.00	608	0.00	608
		MIN	0.00	608	0.00	608	0.00	608	0.00	608
	0.83	MAX	0.15	608	-0.06	608	0.00	608	0.00	608
		MIN	0.15	608	-0.06	608	0.00	608	0.00	608
	1.67	MAX	0.28	608	-0.25	608	0.00	608	0.00	608
		MIN	0.28	608	-0.25	608	0.00	608	0.00	608
	2.50	MAX	0.39	608	-0.53	608	0.00	608	0.00	608
		MIN	0.39	608	-0.53	608	0.00	608	0.00	608
	3.33	MAX	0.49	608	-0.90	608	0.00	608	0.00	608
		MIN	0.49	608	-0.90	608	0.00	608	0.00	608
	4.17	MAX	0.56	608	-1.34	608	0.00	608	0.00	608
		MIN	0.56	608	-1.34	608	0.00	608	0.00	608
	5.00	MAX	0.62	608	-1.83	608	0.00	608	0.00	608
		MIN	0.62	608	-1.83	608	0.00	608	0.00	608
	5.83	MAX	0.65	608	-2.36	608	0.00	608	0.00	608
		MIN	0.65	608	-2.36	608	0.00	608	0.00	608
	6.67	MAX	0.67	608	-2.91	608	0.00	608	0.00	608
		MIN	0.67	608	-2.91	608	0.00	608	0.00	608
	7.50	MAX	0.67	608	-3.47	608	0.00	608	0.00	608
		MIN	0.67	608	-3.47	608	0.00	608	0.00	608
	8.33	MAX	0.65	608	-4.02	608	0.00	608	0.00	608
		MIN	0.65	608	-4.02	608	0.00	608	0.00	608
	9.17	MAX	0.61	608	-4.55	608	0.00	608	0.00	608
		MIN	0.61	608	-4.55	608	0.00	608	0.00	608
	10.00	MAX	0.55	608	-5.03	608	0.00	608	0.00	608
		MIN	0.55	608	-5.03	608	0.00	608	0.00	608

MAX/MIN FORCE VALUES FOR MEMB 1, AMONGST ALL SECT LOCATIONS

	FY/ FZ	DIST DIST	LD LD	MZ/ MY	DIST DIST	LD LD	FX	DIST	LD
MAX.	0.67	6.67	601	0.00	0.00	601			
	0.00	0.00	601	0.00	0.00	601	6.50 C	0.00	603
MIN.	0.00	0.00	608	-5.03	10.00	608			
	0.00	10.00	608	0.00	10.00	608	3.46 C	10.00	607

2	0.00	MAX	0.00	608	0.00	608	0.00	608	0.00	608
		MIN	0.00	608	0.00	608	0.00	608	0.00	608
	0.83	MAX	-0.15	608	0.06	608	0.00	608	0.00	608
		MIN	-0.15	608	0.06	608	0.00	608	0.00	608

1.67	MAX	-0.28	608	0.25	608	0.00	608	0.00	608
	MIN	-0.28	608	0.25	608	0.00	608	0.00	608
2.50	MAX	-0.39	608	0.53	608	0.00	608	0.00	608
	MIN	-0.39	608	0.53	608	0.00	608	0.00	608
3.33	MAX	-0.49	608	0.90	608	0.00	608	0.00	608
	MIN	-0.49	608	0.90	608	0.00	608	0.00	608
4.17	MAX	-0.56	608	1.34	608	0.00	608	0.00	608
	MIN	-0.56	608	1.34	608	0.00	608	0.00	608
5.00	MAX	-0.62	608	1.83	608	0.00	608	0.00	608
	MIN	-0.62	608	1.83	608	0.00	608	0.00	608
5.83	MAX	-0.65	608	2.36	608	0.00	608	0.00	608
	MIN	-0.65	608	2.36	608	0.00	608	0.00	608
6.67	MAX	-0.67	608	2.91	608	0.00	608	0.00	608
	MIN	-0.67	608	2.91	608	0.00	608	0.00	608
7.50	MAX	-0.67	608	3.47	608	0.00	608	0.00	608
	MIN	-0.67	608	3.47	608	0.00	608	0.00	608
8.33	MAX	-0.65	608	4.02	608	0.00	608	0.00	608
	MIN	-0.65	608	4.02	608	0.00	608	0.00	608
9.17	MAX	-0.61	608	4.55	608	0.00	608	0.00	608
	MIN	-0.61	608	4.55	608	0.00	608	0.00	608
10.00	MAX	-0.55	608	5.03	608	0.00	608	0.00	608
	MIN	-0.55	608	5.03	608	0.00	608	0.00	608

MAX/MIN FORCE VALUES FOR MEMB 2, AMONGST ALL SECT LOCATIONS

	FY/ FZ	DIST DIST	LD LD	MZ/ MY	DIST DIST	LD LD	FX	DIST	LD
MAX.	0.00	0.00	601	5.03	10.00	601			
	0.00	0.00	601	0.00	0.00	601	5.89 C	0.00	608
MIN.	-0.67	6.67	608	0.00	0.00	608			
	0.00	10.00	608	0.00	10.00	608	0.88 C	10.00	601

3	0.00	MAX	6.50	603	-6.84	607	0.00	608	0.00	608
		MIN	3.46	607	-8.10	603	0.00	608	0.00	608
	2.17	MAX	5.60	604	-8.68	601	0.00	608	0.00	608
		MIN	0.64	601	-21.46	603	0.00	608	0.00	608
	4.33	MAX	5.46	604	-9.91	601	0.00	608	0.00	608
		MIN	0.12	602	-32.05	604	0.00	608	0.00	608
	6.50	MAX	4.56	605	-10.85	601	0.00	608	0.00	608
		MIN	-0.70	603	-38.64	604	0.00	608	0.00	608
	8.67	MAX	3.67	606	-11.49	601	0.00	608	0.00	608
		MIN	-0.84	603	-45.96	605	0.00	608	0.00	608
	10.83	MAX	3.53	606	-11.83	601	0.00	608	0.00	608
		MIN	-1.74	604	-49.13	606	0.00	608	0.00	608
	13.00	MAX	2.63	607	-11.86	601	0.00	608	0.00	608
		MIN	-2.63	605	-49.85	606	0.00	608	0.00	608
	15.17	MAX	1.58	608	-11.60	601	0.00	608	0.00	608
		MIN	-3.53	606	-49.13	606	0.00	608	0.00	608
	17.33	MAX	-0.33	601	-11.03	601	0.00	608	0.00	608
		MIN	-3.67	606	-45.96	607	0.00	608	0.00	608
	19.50	MAX	-0.47	601	-10.17	601	0.00	608	0.00	608
		MIN	-4.56	607	-39.70	608	0.00	608	0.00	608

21.67	MAX	-0.61	601	-9.00	601	0.00	608	0.00	608
	MIN	-5.61	608	-32.77	608	0.00	608	0.00	608
23.83	MAX	-0.75	601	-7.53	601	0.00	608	0.00	608
	MIN	-5.75	608	-20.46	608	0.00	608	0.00	608
26.00	MAX	-0.88	601	-5.77	601	0.00	608	0.00	608
	MIN	-5.89	608	-7.84	608	0.00	608	0.00	608

MAX/MIN FORCE VALUES FOR MEMB 3, AMONGST ALL SECT LOCATIONS

	FY/ FZ	DIST DIST	LD LD	MZ/ MY	DIST DIST	LD LD	FX	DIST	LD
MAX.	6.50	0.00	603	-5.77	26.00	601			
	0.00	0.00	601	0.00	0.00	601	0.55 T	0.00	601
MIN.	-5.89	26.00	608	-49.85	13.00	606			
	0.00	26.00	608	0.00	26.00	608	0.55 T	26.00	608

********** END OF FORCE ENVELOPE FROM INTERNAL STORAGE **********

251. LOAD LIST 701 TO 709
252. PRINT FORCE ENVELOPE NSECTION 4 ALL

MEMBER FORCE ENVELOPE

ALL UNITS ARE KIP FEET

MEMB	DISTANCE		FY	LD	MZ	LD	FZ	LD	MY	LD
1	0.00	MAX	0.00	709	0.00	709	0.00	709	0.00	709
		MIN	0.00	709	0.00	709	0.00	709	0.00	709
	0.83	MAX	0.15	709	-0.06	709	0.00	709	0.00	709
		MIN	0.15	709	-0.06	709	0.00	709	0.00	709
	1.67	MAX	0.28	709	-0.25	709	0.00	709	0.00	709
		MIN	0.28	709	-0.25	709	0.00	709	0.00	709
	2.50	MAX	0.39	709	-0.53	709	0.00	709	0.00	709
		MIN	0.39	709	-0.53	709	0.00	709	0.00	709
	3.33	MAX	0.49	709	-0.90	709	0.00	709	0.00	709
		MIN	0.49	709	-0.90	709	0.00	709	0.00	709
	4.17	MAX	0.56	709	-1.34	709	0.00	709	0.00	709
		MIN	0.56	709	-1.34	709	0.00	709	0.00	709
	5.00	MAX	0.62	709	-1.83	709	0.00	709	0.00	709
		MIN	0.62	709	-1.83	709	0.00	709	0.00	709
	5.83	MAX	0.65	709	-2.36	709	0.00	709	0.00	709
		MIN	0.65	709	-2.36	709	0.00	709	0.00	709
	6.67	MAX	0.67	709	-2.91	709	0.00	709	0.00	709
		MIN	0.67	709	-2.91	709	0.00	709	0.00	709
	7.50	MAX	0.67	709	-3.47	709	0.00	709	0.00	709
		MIN	0.67	709	-3.47	709	0.00	709	0.00	709
	8.33	MAX	0.65	709	-4.02	709	0.00	709	0.00	709
		MIN	0.65	709	-4.02	709	0.00	709	0.00	709
	9.17	MAX	0.61	709	-4.55	709	0.00	709	0.00	709
		MIN	0.61	709	-4.55	709	0.00	709	0.00	709
	10.00	MAX	0.55	709	-5.03	709	0.00	709	0.00	709
		MIN	0.55	709	-5.03	709	0.00	709	0.00	709

MAX/MIN FORCE VALUES FOR MEMB 1, AMONGST ALL SECT LOCATIONS

	FY/ FZ	DIST DIST	LD LD	MZ/ MY	DIST DIST	LD LD	FX	DIST	LD
MAX.	0.67	6.67	701	0.00	0.00	701			
	0.00	0.00	701	0.00	0.00	701	7.25 C	0.00	704
MIN.	0.00	0.00	709	-5.03	10.00	709			
	0.00	10.00	709	0.00	10.00	709	3.17 C	10.00	702

2	0.00	MAX	0.00	709	0.00	709	0.00	709	0.00	709
		MIN	0.00	709	0.00	709	0.00	709	0.00	709
	0.83	MAX	-0.15	709	0.06	709	0.00	709	0.00	709
		MIN	-0.15	709	0.06	709	0.00	709	0.00	709

1.67	MAX	-0.28	709	0.25	709	0.00	709	0.00	709
	MIN	-0.28	709	0.25	709	0.00	709	0.00	709
2.50	MAX	-0.39	709	0.53	709	0.00	709	0.00	709
	MIN	-0.39	709	0.53	709	0.00	709	0.00	709
3.33	MAX	-0.49	709	0.90	709	0.00	709	0.00	709
	MIN	-0.49	709	0.90	709	0.00	709	0.00	709
4.17	MAX	-0.56	709	1.34	709	0.00	709	0.00	709
	MIN	-0.56	709	1.34	709	0.00	709	0.00	709
5.00	MAX	-0.62	709	1.83	709	0.00	709	0.00	709
	MIN	-0.62	709	1.83	709	0.00	709	0.00	709
5.83	MAX	-0.65	709	2.36	709	0.00	709	0.00	709
	MIN	-0.65	709	2.36	709	0.00	709	0.00	709
6.67	MAX	-0.67	709	2.91	709	0.00	709	0.00	709
	MIN	-0.67	709	2.91	709	0.00	709	0.00	709
7.50	MAX	-0.67	709	3.47	709	0.00	709	0.00	709
	MIN	-0.67	709	3.47	709	0.00	709	0.00	709
8.33	MAX	-0.65	709	4.02	709	0.00	709	0.00	709
	MIN	-0.65	709	4.02	709	0.00	709	0.00	709
9.17	MAX	-0.61	709	4.55	709	0.00	709	0.00	709
	MIN	-0.61	709	4.55	709	0.00	709	0.00	709
10.00	MAX	-0.55	709	5.03	709	0.00	709	0.00	709
	MIN	-0.55	709	5.03	709	0.00	709	0.00	709

MAX/MIN FORCE VALUES FOR MEMB 2, AMONGST ALL SECT LOCATIONS

	FY/ FZ	DIST DIST	LD LD	MZ/ MY	DIST DIST	LD LD	FX	DIST	LD
MAX.	0.00	0.00	701	5.03	10.00	701			
	0.00	0.00	701	0.00	0.00	701	7.04 C	0.00	709
MIN.	-0.67	6.67	709	0.00	0.00	709			
	0.00	10.00	709	0.00	10.00	709	0.87 C	10.00	701

3	0.00	MAX	7.25	704	-6.72	702	0.00	709	0.00	709
		MIN	3.17	702	-8.41	704	0.00	709	0.00	709
	2.17	MAX	6.21	705	-8.41	701	0.00	709	0.00	709
		MIN	0.65	701	-21.64	705	0.00	709	0.00	709
	4.33	MAX	5.17	706	-9.67	701	0.00	709	0.00	709
		MIN	0.21	702	-34.06	705	0.00	709	0.00	709
	6.50	MAX	5.04	706	-10.63	701	0.00	709	0.00	709
		MIN	-0.47	703	-41.74	706	0.00	709	0.00	709
	8.67	MAX	4.00	707	-11.29	701	0.00	709	0.00	709
		MIN	-0.60	703	-48.04	706	0.00	709	0.00	709
	10.83	MAX	2.96	708	-11.65	701	0.00	709	0.00	709
		MIN	-1.48	704	-52.69	706	0.00	709	0.00	709
	13.00	MAX	2.82	708	-11.71	701	0.00	709	0.00	709
		MIN	-2.52	705	-53.02	707	0.00	709	0.00	709
	15.17	MAX	1.69	709	-11.47	701	0.00	709	0.00	709
		MIN	-3.56	706	-52.00	707	0.00	709	0.00	709
	17.33	MAX	-0.32	701	-10.93	701	0.00	709	0.00	709
		MIN	-3.70	706	-48.12	708	0.00	709	0.00	709
	19.50	MAX	-0.46	701	-10.09	701	0.00	709	0.00	709
		MIN	-4.74	707	-41.87	708	0.00	709	0.00	709

MEMBER FORCE ENVELOPE

ALL UNITS ARE KIP FEET

MEMB	DISTANCE		FY	LD	MZ	LD	FZ	LD	MY	LD
1	0.00	MAX	0.00	809	0.00	809	0.00	809	0.00	809
		MIN	0.00	809	0.00	809	0.00	809	0.00	809
	0.83	MAX	0.15	809	-0.06	809	0.00	809	0.00	809
		MIN	0.15	809	-0.06	809	0.00	809	0.00	809
	1.67	MAX	0.28	809	-0.25	809	0.00	809	0.00	809
		MIN	0.28	809	-0.25	809	0.00	809	0.00	809
	2.50	MAX	0.39	809	-0.53	809	0.00	809	0.00	809
		MIN	0.39	809	-0.53	809	0.00	809	0.00	809
	3.33	MAX	0.49	809	-0.90	809	0.00	809	0.00	809
		MIN	0.49	809	-0.90	809	0.00	809	0.00	809
	4.17	MAX	0.56	809	-1.34	809	0.00	809	0.00	809
		MIN	0.56	809	-1.34	809	0.00	809	0.00	809
	5.00	MAX	0.62	809	-1.83	809	0.00	809	0.00	809
		MIN	0.62	809	-1.83	809	0.00	809	0.00	809
	5.83	MAX	0.65	809	-2.36	809	0.00	809	0.00	809
		MIN	0.65	809	-2.36	809	0.00	809	0.00	809
	6.67	MAX	0.67	809	-2.91	809	0.00	809	0.00	809
		MIN	0.67	809	-2.91	809	0.00	809	0.00	809
	7.50	MAX	0.67	809	-3.47	809	0.00	809	0.00	809
		MIN	0.67	809	-3.47	809	0.00	809	0.00	809
	8.33	MAX	0.65	809	-4.02	809	0.00	809	0.00	809
		MIN	0.65	809	-4.02	809	0.00	809	0.00	809
	9.17	MAX	0.61	809	-4.55	809	0.00	809	0.00	809
		MIN	0.61	809	-4.55	809	0.00	809	0.00	809
	10.00	MAX	0.55	809	-5.03	809	0.00	809	0.00	809
		MIN	0.55	809	-5.03	809	0.00	809	0.00	809

MAX/MIN FORCE VALUES FOR MEMB 1, AMONGST ALL SECT LOCATIONS

	FY/ FZ	DIST DIST	LD LD	MZ/ MY	DIST DIST	LD LD	FX	DIST	LD
MAX.	0.67	6.67	801	0.00	0.00	801			
	0.00	0.00	801	0.00	0.00	801	5.13 C	0.00	809
MIN.	0.00	0.00	809	-5.03	10.00	809			
	0.00	10.00	809	0.00	10.00	809	2.39 C	10.00	807

2	0.00	MAX	0.00	809	0.00	809	0.00	809	0.00	809
		MIN	0.00	809	0.00	809	0.00	809	0.00	809
	0.83	MAX	-0.15	809	0.06	809	0.00	809	0.00	809
		MIN	-0.15	809	0.06	809	0.00	809	0.00	809

1.67	MAX	-0.28	809	0.25	809	0.00	809	0.00	809
	MIN	-0.28	809	0.25	809	0.00	809	0.00	809
2.50	MAX	-0.39	809	0.53	809	0.00	809	0.00	809
	MIN	-0.39	809	0.53	809	0.00	809	0.00	809
3.33	MAX	-0.49	809	0.90	809	0.00	809	0.00	809
	MIN	-0.49	809	0.90	809	0.00	809	0.00	809
4.17	MAX	-0.56	809	1.34	809	0.00	809	0.00	809
	MIN	-0.56	809	1.34	809	0.00	809	0.00	809
5.00	MAX	-0.62	809	1.83	809	0.00	809	0.00	809
	MIN	-0.62	809	1.83	809	0.00	809	0.00	809
5.83	MAX	-0.65	809	2.36	809	0.00	809	0.00	809
	MIN	-0.65	809	2.36	809	0.00	809	0.00	809
6.67	MAX	-0.67	809	2.91	809	0.00	809	0.00	809
	MIN	-0.67	809	2.91	809	0.00	809	0.00	809
7.50	MAX	-0.67	809	3.47	809	0.00	809	0.00	809
	MIN	-0.67	809	3.47	809	0.00	809	0.00	809
8.33	MAX	-0.65	809	4.02	809	0.00	809	0.00	809
	MIN	-0.65	809	4.02	809	0.00	809	0.00	809
9.17	MAX	-0.61	809	4.55	809	0.00	809	0.00	809
	MIN	-0.61	809	4.55	809	0.00	809	0.00	809
10.00	MAX	-0.55	809	5.03	809	0.00	809	0.00	809
	MIN	-0.55	809	5.03	809	0.00	809	0.00	809

MAX/MIN FORCE VALUES FOR MEMB 2, AMONGST ALL SECT LOCATIONS

	FY/ FZ	DIST DIST	LD LD	MZ/ MY	DIST DIST	LD LD	FX	DIST	LD
MAX.	0.00	0.00	801	5.03	10.00	801			
	0.00	0.00	801	0.00	0.00	801	4.54 C	0.00	809
MIN.	-0.67	6.67	809	0.00	0.00	809			
	0.00	10.00	809	0.00	10.00	809	0.86 C	10.00	801

3	0.00	MAX	5.13	809	-6.39	807	0.00	809	0.00	809
		MIN	2.39	807	-7.53	809	0.00	809	0.00	809
	2.17	MAX	3.59	804	-8.15	801	0.00	809	0.00	809
		MIN	0.66	801	-15.70	803	0.00	809	0.00	809
	4.33	MAX	3.45	804	-9.44	801	0.00	809	0.00	809
		MIN	0.30	802	-22.51	804	0.00	809	0.00	809
	6.50	MAX	2.87	805	-10.42	801	0.00	809	0.00	809
		MIN	-0.24	803	-26.83	804	0.00	809	0.00	809
	8.67	MAX	2.28	806	-11.11	801	0.00	809	0.00	809
		MIN	-0.38	803	-31.46	805	0.00	809	0.00	809
	10.83	MAX	2.14	806	-11.49	801	0.00	809	0.00	809
		MIN	-0.97	804	-33.52	806	0.00	809	0.00	809
	13.00	MAX	1.55	807	-11.57	801	0.00	809	0.00	809
		MIN	-1.55	805	-34.01	806	0.00	809	0.00	809
	15.17	MAX	0.86	808	-11.35	801	0.00	809	0.00	809
		MIN	-2.14	806	-33.52	806	0.00	809	0.00	809
	17.33	MAX	0.02	809	-10.84	801	0.00	809	0.00	809
		MIN	-2.28	806	-31.46	807	0.00	809	0.00	809
	19.50	MAX	-0.12	809	-10.02	801	0.00	809	0.00	809
		MIN	-2.87	807	-27.56	808	0.00	809	0.00	809

21.67	MAX	-0.59	801	-8.90	801	0.00	809	0.00	809
	MIN	-3.56	808	-23.01	808	0.00	809	0.00	809
23.83	MAX	-0.72	801	-7.48	801	0.00	809	0.00	809
	MIN	-3.70	808	-16.63	809	0.00	809	0.00	809
26.00	MAX	-0.86	801	-5.76	801	0.00	809	0.00	809
	MIN	-4.54	809	-7.28	809	0.00	809	0.00	809

MAX/MIN FORCE VALUES FOR MEMB 3, AMONGST ALL SECT LOCATIONS

	FY/ FZ	DIST DIST	LD LD	MZ/ MY	DIST DIST	LD LD	FX	DIST	LD
MAX.	5.13	0.00	809	-5.76	26.00	801			
	0.00	0.00	801	0.00	0.00	801	0.55 T	0.00	801
MIN.	-4.54	26.00	809	-34.01	13.00	806			
	0.00	26.00	809	0.00	26.00	809	0.55 T	26.00	809

********** END OF FORCE ENVELOPE FROM INTERNAL STORAGE **********

255. FINISH

********** END OF THE STAAD.Pro RUN **********

**** DATE= MAR 17,2015 TIME= 14:13:32 ****

21.67	MAX	-0.60	701	-8.95	701	0.00	709	0.00	709
	MIN	-5.77	708	-33.53	708	0.00	709	0.00	709
23.83	MAX	-0.74	701	-7.51	701	0.00	709	0.00	709
	MIN	-5.91	708	-22.98	709	0.00	709	0.00	709
26.00	MAX	-0.87	701	-5.76	701	0.00	709	0.00	709
	MIN	-7.04	709	-8.32	709	0.00	709	0.00	709

MAX/MIN FORCE VALUES FOR MEMB 3, AMONGST ALL SECT LOCATIONS

	FY/ FZ	DIST DIST	LD LD	MZ/ MY	DIST DIST	LD LD	FX	DIST	LD
MAX.	7.25	0.00	704	-5.76	26.00	701			
	0.00	0.00	701	0.00	0.00	701	0.55 T	0.00	701
MIN.	-7.04	26.00	709	-53.02	13.00	707			
	0.00	26.00	709	0.00	26.00	709	0.55 T	26.00	709

********** END OF FORCE ENVELOPE FROM INTERNAL STORAGE **********

253. LOAD LIST 801 TO 809
254. PRINT FORCE ENVELOPE NSECTION 4 ALL

```
*************************************************************
*   For technical assistance on STAAD.Pro, please visit     *
*   http://selectservices.bentley.com/en-US/                *
*                                                           *
*   Details about additional assistance from                *
*   Bentley and Partners can be found at program menu       *
*   Help->Technical Support                                 *
*                                                           *
*      Copyright (c) 1997-2014 Bentley Systems, Inc.
*                http://www.bentley.com                     *
*************************************************************
```

Section 7
CSI LRFD Wing Wall 1 Calculations

Concrete Systems Inc.
9 Commercial St., Hudson, NH.03051
Phone 603-889-4163
Fax 603-889-2417

AASHTO LRFD WINGWALL CALCULATIONS

PROJECT NUMBER: VT/AOT BRIDGE REPLACEMENT RICHFORD, VT. Wingwall 1
PROJECT NAME:
DATE: May 19, 2015
BY:

INPUT PARAMETERS:

Wall geometry

Panel Height (high) = 14.66 ft
Panel Height (low) = 11.52 ft
Wall Panel Length = 12.00 ft
Entire Wall length = 12.00 ft
Length of flat = 1.00 ft
wall thickness = 12
Wingwall Drop *(high-low)* = 3.14 ft
Wall slope = 0.2855
Max fill ht. *(t/road to b/ww)* = 14.66 ft
Fill Slope *(perp. to road)* = 2.0
Wall angle *(perp. to road)* = 45
Fill slope *(perp. to wall)* = 2.83

Soil properties

γ_{soil} = 140 pcf
γ_{conc} = 150 pcf
$\gamma_{LLsurcharge}$ = 120 pcf
ϕ_{AB} = 32
θ_{AB} = 0
δ_{AB} = 24
ϕ_{BC} = 32
θ_{BC} = 30
δ_{BC} = 16

Foundation

D_{ftg} = 2.0 ft
B_{ftg} = 3.5 ft
o = 15 in
Q_n = 10.0 KSF
NONE

Railing or barrier

T/WW to load = 2.00 ft
impact load = 10.00 K

Wingwall Panel Connected to Bridge Unit= ☑ Yes

	Distance to anchor	Overriding perp. slope @ anchor	Wall height @ anchor	Contrib. width	Perp. slope used @ anchor	h_{eq} LL surch	Anchor Type	Check 'e' & Bearing
Anchor #1	3.00 ft	n	12.38 ft	4.75 ft	5.42 ft	2.00 ft	E	OK
Anchor #2	6.50 ft	n	13.38 ft	3.50 ft	10.41 ft	2.00 ft	E	OK
Anchor #3	10.00 ft	n	14.37 ft	2.75 ft	50.36 ft	2.00 ft	E	OK
Anchor #4	0.00 ft	n	0.00 ft	0.00 ft	2.83 ft	2.00 ft	D	N/A
Anchor #5	0.00 ft	n	0.00 ft	0.00 ft	2.83 ft	2.00 ft	D	N/A

RESULTS SUMMARY				
Mesh (in back of wall)				
0.13	in^2/ft	(vertical/back)		
0.13	in^2/ft	(horizontal/face)		
Reinforcing @ anchor				Anchor Attachment
bar size	number	check bars	eck sh	check
7	4	OK	OK	OK
7	4	OK	OK	OK
7	6	OK	OK	OK
-	-	N/A	N/A	OK
-	-	N/A	N/A	OK
LL Surch @ Plates ☐				
add'l reinf in FF: *no add'l ff reinf.*				

CALCULATION NOTES:

1. Wingwall calculations are done in accordance with the current edition of the *AASHTO LRFD Bridge Design Specifications* .

2. Moments are summed about the *toe (face) of the wingwall* (point "o" on attached "Pressure Diagram").

3. K_a is calculated using equation found in former AASHTO LRFD Specifications Equation 3.11.5.3-1

$$K_a = \frac{\sin^2(\phi+\theta)}{\sin^2\theta\sin(\theta-\delta)\left[1+\sqrt{\frac{\sin(\phi+\delta)\sin(\phi-\beta)}{\sin(\theta-\delta)\sin(\theta+\beta)}}\right]^2}$$

4. Only 80% of the soil unit weight is used for the eccentricity/ stability calculation. This is a conservative assumption as explained in the full HITEC report "Evaluation of the CON/SPAN® Wingwall System"
5. The full 100% of the soil unit weight is used for the bearing calculations.
6. These calculations conservatively assume that the wall anchor has the same unit weight as soil.
7. The wingwall angle (in plan view) is measured from perpendicular to roadway.
8. Barrier loads are distributed per AASHTO LRFD Specifications Section 13

Anchor 1			
SOIL PROPERTY	**DESCRIPTION**	**VALUE section AB**	**VALUE section BC**
ϕ	friction angle of soil	32	32
θ	angle of wall to the y-axis	0	30
δ	wall-soil friction angle *(measured from a perpendicular with the wall)* =0, if significant vibrations of backfill or modules settling more than backfill. = 0.5*ϕ, if modules are uniform width. = 0.75*ϕ, if averaged pressure surface	24	16
x	side slopes from road (x:1)	2.0	
α	wingwall angle (angle w/ perpendicular to road)	45	
	slope of backfill (perpendicular to wall)	5.42	
β	angle of backfill (perpendicular to wall)	10.5	10.5
	$(K_a)_{AB}$ =	0.31	$(K_a)_{BC}$ = 0.12

Anchor 1

VARIABLE	DESCRIPTION OF VARIABLE	VALUE	
H	wingwall design height at anchor location (feet)	12.38	
h_{surch}	height of live load surcharge (feet)	2.00	
t	thickness of wingwall (inches)	12	
δ	wall friction angle for section AB	24	
β	angle of backfill (degrees)	10.5	
L	length of anchor (feet)	7.04	E
γ_s	unit weight of backfill (kcf)	140	
γ_c	unit weight of concrete (kcf)	150	
γ_{surch}	unit weight of surcharge (kcf)	120	*(per AASHTO LRFD 3.11.6.4)*

Description	Vertical Reaction (k/ft)	Horizontal Reaction (k/ft)	Lever Arm (ft)	Disturbing Moment (ft-k/ft)	"Stability" Resisting Moment (ft-k/ft)	"Bearing" Resisting Moment (ft-k/ft)
wall (W_w)	1.86		0.50		0.93	0.93
soil I_A	0.64		5.69		2.92	3.64
soil I_B	8.75		4.52		31.63	39.54
soil II_A	2.08		3.13		5.21	6.51
soil II_B	0.68		6.02		3.29	4.11
$W_{surcharge(vert)}$	1.69		4.52		7.64	7.64
$W_{parapet}$	0.00		0.50		0.00	0.00
Soil Pressure						
$(P_{AB})_v$	0.93		8.04		7.45	7.45
$(P_{AB})_h$		2.08	6.89	14.35		
$(P_{BC1})_v$	-0.19		6.89		-1.28	-1.28
$(P_{BC1})_h$		0.75	1.50	1.12		
$(P_{BC2})_v$	-0.04		6.50		-0.24	-0.24
$(P_{BC2})_h$		0.15	0.83	0.12		
$P_{surcharch(hor)}$		0.85	6.84	5.84		
TOTALS =	16.40	3.83		21.43	57.54	68.31

AASHTO LRFD C11.6.3.3 states: The specified criteria for the location of the resultant, coupled with investigation of the bearing pressure, replaces the investigation of the ratio of stabilizing moment to overturning moment. See Section III Soil Bearing Pressure.

Anchor 2			
SOIL PROPERTY	**DESCRIPTION**	**VALUE section AB**	**VALUE section BC**
ϕ	friction angle of soil	32	32
θ	angle of wall to the y-axis	0	30
δ	wall-soil friction angle *(measured from a perpendicular with the wall)* =0, if significant vibrations of backfill or modules settling more than backfill. = 0.5*ϕ, if modules are uniform width. = 0.75*ϕ, if averaged pressure surface	24	16
x	side slopes from road (x:1)	2.0	
α	wingwall angle (angle w/ perpendicular to road)	45	
	slope of backfill (perpendicular to wall)	10.41	
β	angle of backfill (perpendicular to wall)	5.5	10.5
	$(K_a)_{AB}$ =	0.29	$(K_a)_{BC}$ = 0.11

Anchor 2

VARIABLE	DESCRIPTION OF VARIABLE	VALUE	
H	wingwall design height at anchor location (feet)	13.38	
h_{surch}	height of live load surcharge (feet)	2.00	
t	thickness of wingwall (inches)	12	
δ	wall friction angle for section AB	24	
β	angle of backfill (degrees)	5.5	
L	length of anchor (feet)	7.04	E
γ_s	unit weight of backfill (kcf)	140	
γ_c	unit weight of concrete (kcf)	150	
γ_{surch}	unit weight of surcharge (kcf)	120	*(per AASHTO LRFD 3.11.6.4)*

Description	Vertical Reaction (k/ft)	Horizontal Reaction (k/ft)	Lever Arm (ft)	Disturbing Moment (ft-k/ft)	"Stability" Resisting Moment (ft-k/ft)	"Bearing" Resisting Moment (ft-k/ft)
wall (W_w)	2.01		0.50		1.00	1.00
soil I_A	0.33		5.69		1.52	1.90
soil I_B	9.73		4.52		35.20	43.99
soil II_A	2.08		3.13		5.21	6.51
soil II_B	0.68		6.02		3.29	4.11
$W_{surcharge}$	1.69		4.52		7.64	7.64
$W_{parapet}$	0.00		0.50		0.00	0.00
Soil Pressure						
$(P_{AB})_v$	0.93		8.04		7.48	7.48
$(P_{AB})_h$		2.09	7.02	14.66		
$(P_{BC1})_v$	-0.18		6.88		-1.27	-1.27
$(P_{BC1})_h$		0.74	1.50	1.11		
$(P_{BC2})_v$	-0.03		6.88		-0.24	-0.24
$(P_{BC2})_h$		0.14	0.83	0.12		
P_{surch}		0.86	7.03	6.05		
TOTALS =	17.24	3.83		21.93	59.82	71.13

AASHTO LRFD C11.6.3.3 states: The specified criteria for the location of the resultant, coupled with investigation of the bearing pressure, replaces the investigation of the ratio of stabilizing moment to overturning moment. See Section III Soil Bearing Pressure.

Anchor 3			
SOIL PROPERTY	**DESCRIPTION**	**VALUE section AB**	**VALUE section BC**
ϕ	friction angle of soil	32	32
θ	angle of wall to the y-axis	0	30
δ	wall-soil friction angle *(measured from a perpendicular with the wall)* =0, if significant vibrations of backfill or modules settling more than backfill. = 0.5*ϕ, if modules are uniform width. = 0.75*ϕ, if averaged pressure surface	24	16
x	side slopes from road (x:1)	2.0	
α	wingwall angle (angle w/ perpendicular to road)	45	
	slope of backfill (perpendicular to wall)	50.36	
β	angle of backfill (perpendicular to wall)	1.1	1.1
	$(K_a)_{AB}$ =	0.28	$(K_a)_{BC}$ = 0.11

Anchor 3

VARIABLE	DESCRIPTION OF VARIABLE	VALUE	
H	wingwall design height at anchor location (feet)	14.37	
h_{surch}	height of live load surcharge (feet)	2.00	
t	thickness of wingwall (inches)	12	
δ	wall friction angle for section AB	24	
β	angle of backfill (degrees)	1.1	
L	length of anchor (feet)	7.04	E
γ_s	unit weight of backfill (kcf)	140	
γ_c	unit weight of concrete (kcf)	150	
γ_{surch}	unit weight of surcharge (kcf)	120	*(per AASHTO LRFD 3.11.6.4)*

Description	Vertical Reaction (k/ft)	Horizontal Reaction (k/ft)	Lever Arm (ft)	Disturbing Moment (ft-k/ft)	"Stability" Resisting Moment (ft-k/ft)	"Bearing" Resisting Moment (ft-k/ft)
wall (W_w)	2.16		0.50		1.08	1.08
soil I_A	0.07		5.69		0.31	0.39
soil I_B	10.72		4.52		38.76	48.45
soil II_A	2.08		3.13		5.21	6.51
soil II_B	0.68		6.02		3.29	4.11
$W_{surcharge}$	1.69		4.52		7.64	7.64
$W_{parapet}$	0.00		0.50		0.00	0.00
Soil Pressure						
$(P_{AB})_v$	0.96		8.04		7.72	7.72
$(P_{AB})_h$		2.16	7.17	15.47		
$(P_{BC1})_v$	-0.19		6.88		-1.28	-1.28
$(P_{BC1})_h$		0.74	1.50	1.12		
$(P_{BC2})_v$	-0.03		6.88		-0.23	-0.23
$(P_{BC2})_h$		0.14	0.83	0.11		
P_{surch}		0.88	7.26	6.36		
TOTALS =	18.14	3.91		23.06	62.50	74.39

AASHTO LRFD C11.6.3.3 states: The specified criteria for the location of the resultant, coupled with investigation of the bearing pressure, replaces the investigation of the ratio of stabilizing moment to overturning moment. See Section III Soil Bearing Pressure.

II. CHECK OVERTURNING STABILITY AT CONNECTION PLATES

The connection plates provide stability for the portion of the wall not supported by the anchors, i.e., the section closest to the culvert. (See wingwall sketch)

Data:

number of plates = 2

ϕ = 32

δ = 24

γ_s = 0.140 kcf

$\gamma_{(surcharge)}$ = 0.120 kcf

wall height @ plates (H) = **14.66 ft**

Live load surcharge (h) = **2.00 ft**

section width for plates (S) = 1.0 ft

$y_{Psh} = H/3$ = 4.9 ft

$y_{PLL} = H/2$ = 7.3 ft

y_{p1} = **3.50 ft**

y_{p2} = **8.50 ft**

A_{bolt} = 0.79

t_{plate} = 1.00 in

$\phi F_{(bolt)}$ = 30 ksi

$F_{y(plate)}$ = 36 ksi

Find soil pressure on section:

Because the wall is more rigid at the plates, at-rest soil pressure coefficient (K_o) is used.

$K_o = 1\text{-}\sin\phi = 0.47$ *(AASHTO LRFD eq. 3.11.5.2-1)*

$P_{sh} = (^1/_2)\gamma_s K_o H^2(S)(\cos\delta) = 6.46$ K

$P_{LLh} = K_o\gamma_s HhS(\cos\delta) = 1.51$ K

$P_{impact} = P_{imp}S/L_{distr} = 0$

Find reaction at plate:

Sum moments about bottom plate, p_1

$\Sigma M_{p1} = 0 = P_{sh}(y_{Psh} - y_{p1}) - p_2(y_{p2} - y_{p1})$ *(dead load)*

$\Sigma M_{p1} = 0 = P_{LL}(y_{PLL} - y_{p1}) - p_{2LL}(y_{p2} - y_{p1}) + P_{imp}(y_{imp} - y_{p1}$ *(live load)*

$p_2 = \dfrac{P_{sh}(y_{Psh} - y_{p1})}{(y_{p2} - y_{p1})} = 1.79$ K $\qquad p_1 = P_{sh} - p_2 = 4.67$ K

$p_{2LL} = \dfrac{P_{LLh}(y_{pLL} - y_{p1}) + P_{imp}(y_{imp} - y_{p1})}{(y_{p2} - y_{p1})} = 1.16$ K $\qquad p_{1LL} = P_{LL} + P_{imp} - p_{2LL} = 0.35$ K

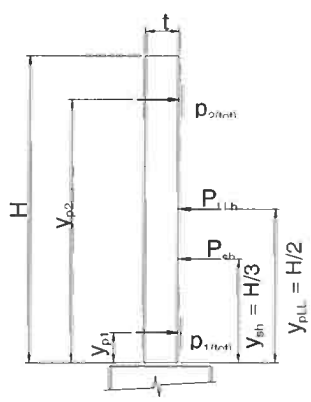

Find factored reaction:

Load factors are per AASHTO LRFD 3.4.1-1 & Table 3.4.1-2

$p_{fac} = \gamma p_{max(DL)} + (1.75)p_{max(LL)}$

$p_{fac} = (1.35)p_{(DL)} + (1.75)p_{(LL)}$

$p_{1(tot,\ factored)}$ = 6.92 K ***Controls***

$p_{2(tot,\ factored)}$ = 4.44 K

$p_{(max,\ factored)}$ = 6.92 K

Check bolts:

The special Richmond Screw Anchor *"wingwall insert" pullout capacity was obtained from the manufacturer and has approx. 3:1 safety factor.*

Pullout capacity = 16.5 k/bolt ***Controls***

Bolt tension = $\phi F A_{bolt}$ = 23.7 k/bolt

$F.S. = \dfrac{\text{Capacity* 2 bolts}}{(p_{fac})} = 4.77$ *> 1.0, OK*

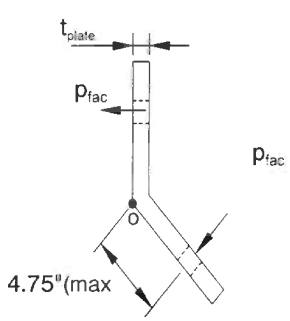

Check bending of plate:

Sum moments about corner of plate, point "o"

$\Sigma M_o = (p_{fac})(4.75") = 32878$ lb-in

$I_{pl} = bh^3/12 = 0.83$ in^4

$\sigma_{max} = \dfrac{My}{I_{pl}} = 20$ ksi $\quad < \phi F_y = 0.9F_y$ *OK*

(AISC LRFD-F2 states $\phi_b = 0.9$)

length of connection plate is 10"

III. CHECK SOIL BEARING PRESSURE AND SLIDING UNDER CAST-IN-PLACE FOOTING

The reaction will be supported on the horizontal portion of the anchor plus the footing.

R_v = Total vertical reaction at anchor (using 100% of soil weight).

R_h = Total horizontal reaction at anchor.

M_D = Disturbing moment at anchor.

M_{Rb} = Resisting moment due to 100% of soil at anchor.

Summary of loads at anchors

anchor	anchor base length	R_v ($^K/_F$)	R_h ($^K/_F$)	M_D ($^{K\text{-}F}/_F$)	M_{Rb} ($^{K\text{-}F}/_F$)
1	4.73	16.40	3.83	21.43	68.31
2	4.73	17.24	3.83	21.93	71.13
3	4.73	18.14	3.91	23.06	74.39
4	3.73	0.00	0.00	0.00	0.00
5	3.73	0.00	0.00	0.00	0.00

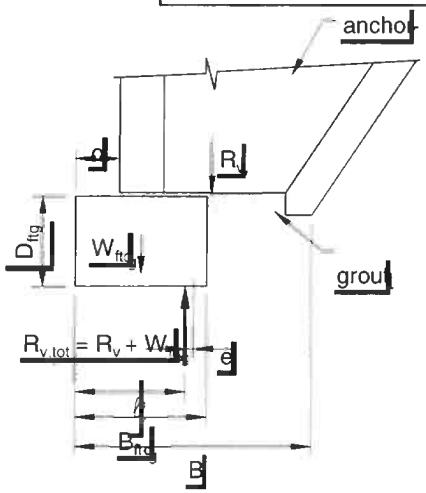

Check the bearing pressure under the wall

D_{ftg} = 2.0 ft

B_{ftg} = 3.5 ft

o = 15 in

W_{ftg} = 1.05 klf

Q_n = 10.0 KSF

Q_b = Factored bearing resistanc

Load Factors

γ_{EV} = 1.35

γ_{DC} = 1.25

γ_{LS} = 1.75

Resistance Factors

ϕ_B = 0.45

B = bearing width

= maximum of (anchor base length + o) or B_{ftg}

ℓ = location of vertical resultant ($R_{v,tot}$) along bearing width

$$= \frac{R_v((M_{Rb}-M_D)/R_v + o) + W_{ftg}(B/2)}{R_{v,tot}}$$

e = eccentricity of resultant

= B/2 - ℓ

B' = adjusted bearing width

= B - 2e

q = factored bearing pressure *(must be less than Q_b)*

= $R_{v,tot}$ / B'

Check bearing pressure at each anchor

anchor	B (ft)	ℓ (ft)	e	check e	B' (ft)	q	Q_b	check q
1	6.98	3.97	-0.48	*OK*	6.03	3.97	4.50	*OK*
2	6.98	3.97	-0.48	*OK*	6.02	3.72	4.50	*OK*
3	6.98	3.95	-0.46	*OK*	6.06	4.39	4.50	*OK*
4	0.00	0.00	0.00	*n/a*	0.00	0.00	4.50	*n/a*
5	0.00	0.00	0.00	*n/a*	0.00	0.00	4.50	*n/a*

Check the sliding factor of safety

$R_R = \phi * R_{V,tot} * .8 * \tan \phi$ *(AASHTO LRFD 10.6.3.4)*

(must be >R_h)

ϕ = 0.9 *from AASHTO LRFD Table 10.5.5.2.2-1 for precast concrete on sand*

Check sliding at each anchor

anchor	$R_{v,tot}$ (k/f)	R_R (k/f)	R_h	check $R_R > R_h$
1	17.45	7.85	3.83	*OK*
2	18.29	8.23	3.83	*OK*
3	19.19	8.64	3.91	*OK*
4	0.00	0.00	0.02	*n/a*
5	0.00	0.00	0.02	*n/a*

IV. CHECK BENDING OF FOOTING CROSS SECTION

Bending need not be considered in footings when the footing depth, D, exceeds the projection, pr, of the footing beyond the edge of the wall.

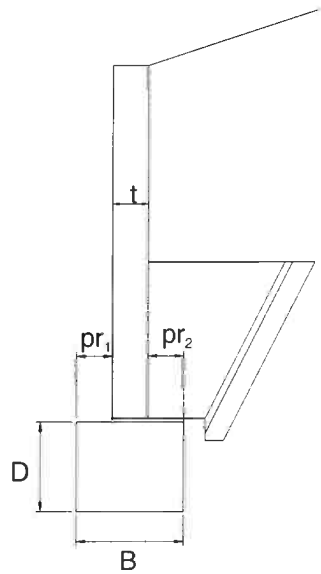

pr_1 = offset(o) = 15 in

pr_2 = B - o - t = 15 in ***Controls***

pr_{max} = 15 in

projection < D *OK*

Use minimal steel stirrups
#4 @ 48 inches o.c.

V. CHECK WALL SECTION - BENDING AND SHEAR (vertical bars)

Assumptions: *1. Wall stem is cantilevered from anchor.*
2. Use active earth pressure because wall can deflect at top.
3. Use K_a and δ from Anchor Stability Calculations.

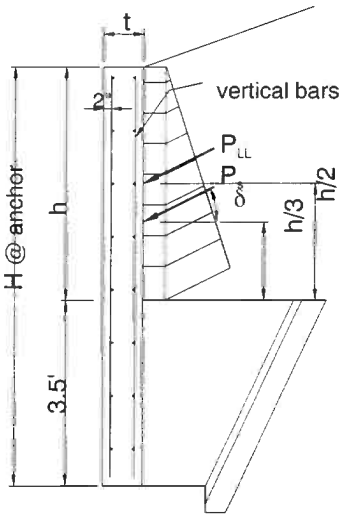

Horizontal loads:

$P_{sh} = (^1/_2)\gamma_s K_a h^2(\cos\delta)$

$P_{LLh} = \gamma_s K_a h(h_{surcharge})(\cos\delta)$

$P_{impact} = P_{imp}/L_{distr}$

Factored forces:

Load factors are per AASHTO LRFD 3.4.1-1 & Table 3.4.1-2

M_u = Section width$[(1.35)P_{sh}(h/3) + (1.75)P_{LLh}(h/2) + (1.75)P_{imp}(h+y_{imp})]$

V_u = Section width$[(1.35)P_{sh} + (1.75P_{LLh} + (1.75P_{imp}]$

Summary of forces at anchors

anchor	H (ft)	h (ft)	$h_{surcharge}$ (ft)	P_{sh} (k/ft)	P_{LLh} (k/ft)	P_{imp} (k/ft)	M_u (k-ft)	V_u (k)
1	12.38	8.88	2.00	1.58	0.61	0.00	52.64	15.25
2	13.38	9.88	2.00	1.83	0.64	0.00	47.68	12.54
3	14.37	10.87	2.00	2.10	0.66	0.00	45.66	11.00
4	0.00	0.00	2.00	0.00	0.00	0.00	0.00	0.00
5	0.00	0.00	2.00	0.00	0.00	0.00	0.00	0.00

Check bending (reinforcment) at anchors

f'_c = **5000 psi**

f_y = **60000 psi**

ϕ_b = **0.9** *(AASHTO LRFD 5.4.2.1)*

$m = f_y/0.85f'_c$ = 14.12

d = 9.56 in

b = anchor's contrib. width

$$R_u = \frac{M_u}{\phi_b b d^2}$$

$$\rho_{reqd} = \frac{1}{m}\left(1-\sqrt{1-\frac{2mR_u}{f_y}}\right)$$

ρ_{min} = *AASHTO LRFD 5.7.3.3.2 states the minimum reinforcement is the lesser of 1.2Mcr OR 1.33 times the factored moment required by strength.*

anchor	R_u (psi)	ρ_{reqd}	ρ_{cr}	ρ_{min}	$A_{s\ min}$ (in^2)	$A_{s\ actual}$ (in^2)	check
1	135	0.0023	0.0032	0.0030	1.62	3.02	*OK*
2	166	0.0028	0.0032	0.0032	1.27	2.86	*OK*
3	202	0.0034	0.0032	0.0034	1.09	3.97	*OK*
4	0	0.0000	0.0032	0.0000	0.00	#######	*N/A*
5	0	0.0000	0.0032	0.0000	0.00	#######	*N/A*

Check shear

$V_c = (.0316)*\beta \sqrt{f'_c}\, b_v d_v$ *(V_c calculated by AASHTO LRFD eq'n 5.8.3.3-3)*

$\phi = 0.9$ *(AASHTO LRFD 5.5.4.2.1)*

$\beta = 2$ *(AASHTO LRFD 5.8.3.4.1)*

$d_v = .9*d$ or $.72*h$ *whichever is greater (AASHTO LRFD 5.8.2.9)*

anchor	ϕV_c	check $V_u < \phi V_c$
1	62.64	*OK*
2	46.15	*OK*
3	36.26	*OK*
4	0.00	*N/A*
5	0.00	*N/A*

VI. CHECK TYPE 'E' ANCHOR ATTACHMENT

Check capacity of connector for pullout (truncated pyramid failure), shear, tension, and combined shear & tension

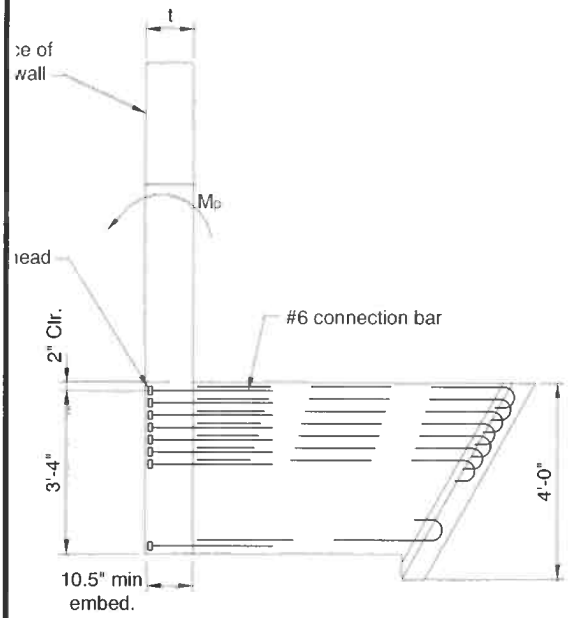

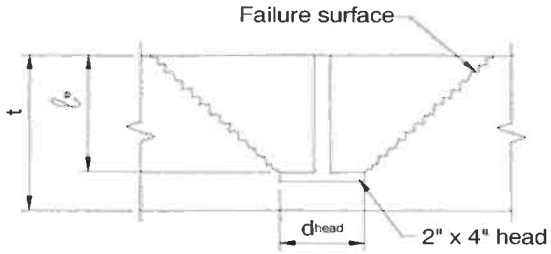

embedment depth (t_e) = **10.5 in**

Attachment depth = 42 in

X head dimension (Xd_{head}) = 3 in

Y head dimension (Yd_{head}) = 3 in

Bar size = **# 6**

rows = **7**

row spacing = **3 in**

wall thickness (t) = 12 in

x = Xd_{head} (*since only 1 column*) = 3 in

y = (#rows-1)(row spacing) + Yd_{head} = 21 in

z = min(x,y) = 3 in

h_{min} = (z + $2t_e$)/2 = 12.0 in

A_R = (x+$2t_e$-2t)(y+$2t_e$-2t) = 0.0 in^2

f'_c = **5000 psi**

f_y = **60000 psi**

$\phi_{concrete}$ = 0.85

ϕ_{steel} = 0.90

TENSION CAPACITY (Per PCI Design Handbook §6.5.2.1)

t > hmin: failure surface does not penetrate slab

Find pullout capacity of concrete

if t >= h_{min}, $\phi P_c = \phi 2.67 sqrt(f'c)(x+2te)(y+2te)$

if t < h_{min}, $\phi P_c = \phi 2.67 sqrt(f'c)[(x+2te)(y+2te) - A_R]$

ϕP_c = 161.76 K

Find tension capacity of studs

$\phi P_y = \phi f_y(A_{bar})(\#bars)$

ϕP_y = 167.00 K

controlling tension capacity (ϕP) = 161.76 K

Find moment capacity of anchor

Moment capacity of anchor (ϕM_n) = $\phi P(d-a/2)$

d = attachment depth - bar cover - $(y-Yd_{head})/2$ = 31 in

a = $A_s f_y/0.85 f'_c b$ = 7.28 in

ϕM_n = 368.84 k-f

SHEAR CAPACITY (Per PCI Design Handbook §6.5.2.2)

Find shear capacity of concrete

$\phi V_c = \phi V'_c C_w C_t C_c$

$\phi V'_c = \phi 12.5 d_e$ * sqrt(f'_c)	= 187.4 K
$C_w = 1 + \text{spacing}/3.5d_e < \#\text{columns}$	= 1.0
$C_t = t/1.3d_e <= 1.0$	= 0.23
$C_c = 0.4 + 0.7d_c/de <= 1.0$	= 1.0
d_e = attachment depth - cover - bar dia/2	= 40 in
d_c = distance to side of wingwall	= 36 in

$\phi V_c = \phi V'_c C_w C_t C_c =$ 43.66 K

Find shear capacity of studs

$\phi V_y = \phi 0.9 f_y A_{bar}(\#\text{bars})$

$\phi V_y =$ 150.30 K

controlling shear capacity (ϕV) = 43.66 K

FIND LOADS

Unfactored loads on anchors:

$M_{D(DL)}$ = (sec width)$M_{D(anchor)}$

$M_{D(LL)}$ = (sec width)($M_{D(anchor)}$ + P_{imp}*(wall ht + y_{imp}))

Factored loads:

Load factors are per AASHTO 3.22.1 & Table 3.22.1A

$M_u = (1.3)(1.3)M_{D(DL)} + (1.3)(1.67)M_{D(LL)}$

$P_u = M_u$ /(d-a/2)*cos(bar angle)

$V_u = M_u$ /(d-a/2)*sin(bar angle)

bar angle = 0°

Summary of forces

anchor	$M_{D(DL)}$ ft-k	$M_{D(LL)}$ ft-k	M_u ft-k	P_u k	V_u k
1	74.1	27.7	185.4	81.3	0.0
2	55.6	21.2	139.9	61.4	0.0
3	45.9	17.5	115.6	50.7	0.0
4	0.0	0.0	0.0	0.0	0.0
5	0.0	0.0	0.0	0.0	0.0

Summary of results

anchor	check $\phi M_n > M_u$	check $\phi P > P_u$	check $\phi V > V_u$	check combined V_c & P_c	check combined V_s & P_s
1	*OK*	*OK*	*OK*	*OK*	*OK*
2	*OK*	*OK*	*OK*	*OK*	*OK*
3	*OK*	*OK*	*OK*	*OK*	*OK*
4	*n/a*	*n/a*	*n/a*	*n/a*	*n/a*
5	*n/a*	*n/a*	*n/a*	*n/a*	*n/a*

NOTE:

ULTIMATE PULLOUT CAPACITY 33,000 POUNDS IN 3,000 PSI CONCRETE.

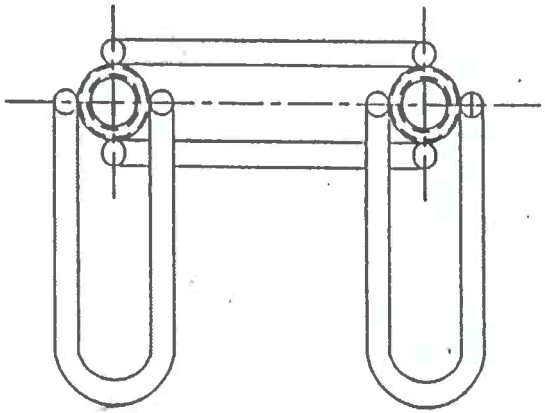

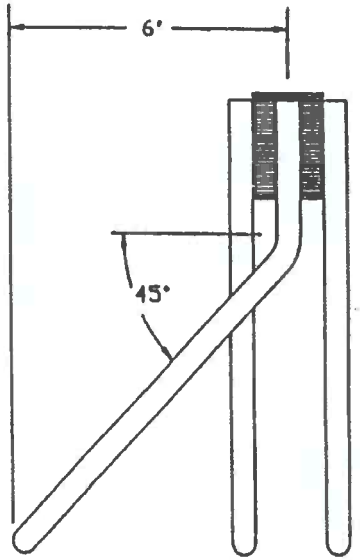

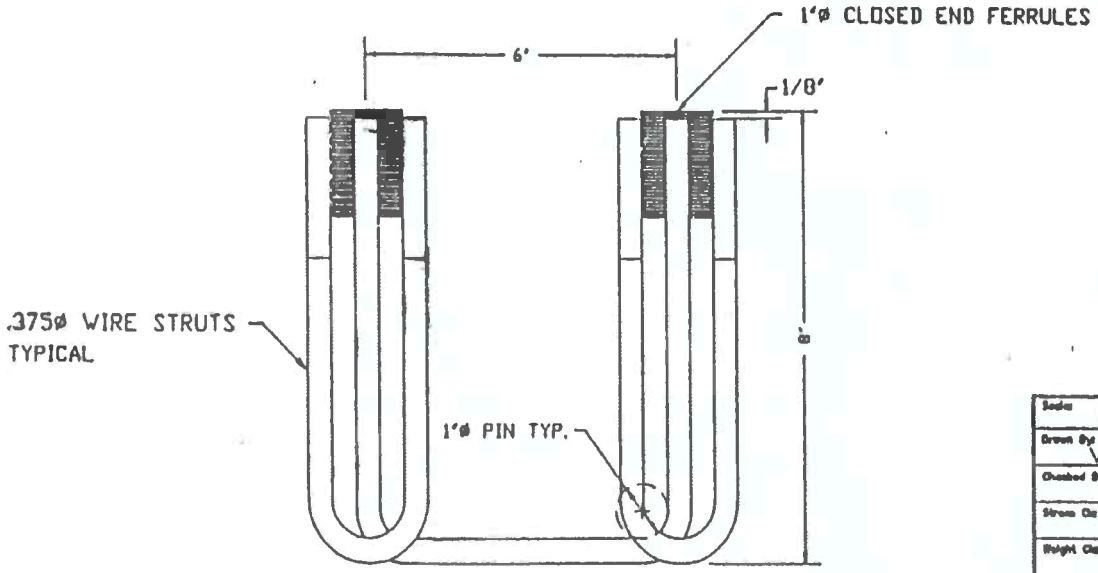

Scale NONE	Date	RICHMOND Screw Anchor Co. 7214 Burns Street Fort Worth, TX 76118		
Drawn By VADIM	2/7/90			
Checked By		1"ø TWO BOLT WINGWALL PRESET ANCHOR		
Stress Cir				
Weight Cir				
Approved		Product Symbol	Drawing No.	Rel. Date
Customer			D-694	

Section 8
CSI LRFD Wing Wall 2 Calculations

Concrete Systems Inc.
9 Commercial St., Hudson, NH,03051
Phone 603-889-4163
Fax 603-889-2417

AASHTO LRFD WINGWALL CALCULATIONS

PROJECT NUMBER: VT/AOT BRIDGE REPLACEMENT RICHFORD, VT. Wingwall 2
PROJECT NAME:
DATE: May 19, 2015
BY:

INPUT PARAMETERS:

Wall geometry

Panel Height (high) = 14.66 ft
Panel Height (low) = 12.22 ft
Wall Panel Length = 10.00 ft
Entire Wall length = 10.00 ft
Length of flat = 1.00 ft
wall thickness = 12
Wingwall Drop *(high-low)* = 2.44 ft
Wall slope = 0.2711
Max fill ht. *(t/road to b/ww)* = 14.66 ft
Fill Slope *(perp. to road)* = 2.0
Wall angle *(perp. to road)* = 45
Fill slope *(perp. to wall)* = 2.83
Wingwall Panel Connected to Bridge Unit= ✓ Yes

Soil properties

γ_{soil} = 140 pcf
γ_{conc} = 150 pcf
$\gamma_{LLsurcharge}$ = 120 pcf
ϕ_{AB} = 32
θ_{AB} = 0
δ_{AB} = 24
ϕ_{BC} = 32
θ_{BC} = 30
δ_{BC} = 16

Foundation

D_{ftg} = 2.0 ft
B_{ftg} = 3.5 ft
o = 15 in
Q_n = 10.0 KSF
NONE

Railing or barrier

T/WW to load = 2.00 ft
impact load = 10.00 K

	Distance to anchor	Overriding perp. slope @ anchor	Wall height @ anchor	Contrib. width	Perp. slope used @ anchor	h_{eq} LL surch	Anchor Type	Check 'e' & Bearing
Anchor #1	3.00 ft	n	13.03 ft	5.00 ft	8.01 ft	2.00 ft	E	OK
Anchor #2	7.00 ft	n	14.12 ft	3.50 ft	26.04 ft	2.00 ft	E	OK
Anchor #3	0.00 ft	n	0.00 ft	0.00 ft	2.83 ft	2.00 ft	D	N/A
Anchor #4	0.00 ft	n	0.00 ft	0.00 ft	2.83 ft	2.00 ft	D	N/A
Anchor #5	0.00 ft	n	0.00 ft	0.00 ft	2.83 ft	2.00 ft	D	N/A

RESULTS SUMMARY				
Mesh (in back of wall)				
0.13	in^2/ft	(vertical/back)		
0.13	in^2/ft	(horizontal/face)		
Reinforcing @ anchor				Anchor Attachment
bar size	number	check bars	eck sh	check
7	4	OK	OK	OK
7	6	OK	OK	OK
-	-	N/A	N/A	OK
-	-	N/A	N/A	OK
-	-	N/A	N/A	OK
LL Surch @ Plates ☐				
add'l reinf in FF: *no add'l ff reinf.*				

CALCULATION NOTES:

1. Wingwall calculations are done in accordance with the current edition of the *AASHTO LRFD Bridge Design Specifications* .
2. Moments are summed about the *toe (face) of the wingwall* (point "o" on attached "Pressure Diagram").
3. K_a is calculated using equation found in former AASHTO LRFD Specifications Equation 3.11.5.3-1

$$K_a = \frac{\sin^2(\phi + \theta)}{\sin^2\theta \sin(\theta - \delta)\left[1 + \sqrt{\frac{\sin(\phi + \delta)\sin(\phi - \beta)}{\sin(\theta - \delta)\sin(\theta + \beta)}}\right]^2}$$

4. Only 80% of the soil unit weight is used for the eccentricity/ stability calculation. This is a conservative assumption as explained in the full HITEC report "Evaluation of the CON/SPAN® Wingwall System"
5. The full 100% of the soil unit weight is used for the bearing calculations.
6. These calculations conservatively assume that the wall anchor has the same unit weight as soil.
7. The wingwall angle (in plan view) is measured from perpendicular to roadway.
8. Barrier loads are distributed per AASHTO LRFD Specifications Section 13

Anchor 1			
SOIL PROPERTY	**DESCRIPTION**	**VALUE section AB**	**VALUE section BC**
ϕ	friction angle of soil	32	32
θ	angle of wall to the y-axis	0	30
δ	wall-soil friction angle *(measured from a perpendicular with the wall)* =0, if significant vibrations of backfill or modules settling more than backfill. = 0.5*ϕ, if modules are uniform width. = 0.75*ϕ, if averaged pressure surface	24	16
x	side slopes from road (x:1)	2.0	
α	wingwall angle (angle w/ perpendicular to road)	45	
	slope of backfill (perpendicular to wall)	8.01	
β	angle of backfill (perpendicular to wall)	7.1	7.1
	$(K_a)_{AB}$ =	0.30	$(K_a)_{BC}$ = 0.11

Anchor 1

VARIABLE	DESCRIPTION OF VARIABLE	VALUE	
H	wingwall design height at anchor location (feet)	13.03	
h_{surch}	height of live load surcharge (feet)	2.00	
t	thickness of wingwall (inches)	12	
δ	wall friction angle for section AB	24	
β	angle of backfill (degrees)	7.1	
L	length of anchor (feet)	7.04	E
γ_s	unit weight of backfill (kcf)	140	
γ_c	unit weight of concrete (kcf)	150	
γ_{surch}	unit weight of surcharge (kcf)	120	*(per AASHTO LRFD 3.11.6.4)*

Description	Vertical Reaction (k/ft)	Horizontal Reaction (k/ft)	Lever Arm (ft)	Disturbing Moment (ft-k/ft)	"Stability" Resisting Moment (ft-k/ft)	"Bearing" Resisting Moment (ft-k/ft)
wall (W_w)	1.96		0.50		0.98	0.98
soil I_A	0.43		5.69		1.97	2.47
soil I_B	9.40		4.52		33.98	42.47
soil II_A	2.08		3.13		5.21	6.51
soil II_B	0.68		6.02		3.29	4.11
$W_{surcharge(vert)}$	1.69		4.52		7.64	7.64
$W_{parapet}$	0.00		0.50		0.00	0.00
Soil Pressure						
$(P_{AB})_v$	0.93		8.04		7.44	7.44
$(P_{AB})_h$		2.08	6.97	14.49		
$(P_{BC1})_v$	-0.18		6.89		-1.27	-1.27
$(P_{BC1})_h$		0.74	1.50	1.11		
$(P_{BC2})_v$	-0.04		6.50		-0.23	-0.23
$(P_{BC2})_h$		0.14	0.83	0.12		
$P_{surcharch(hor)}$		0.86	6.96	5.96		
TOTALS =	16.95	3.82		21.68	59.00	70.11

AASHTO LRFD C11.6.3.3 states: The specified criteria for the location of the resultant, coupled with investigation of the bearing pressure, replaces the investigation of the ratio of stabilizing moment to overturning moment. See Section III Soil Bearing Pressure.

Anchor 2			
SOIL PROPERTY	**DESCRIPTION**	**VALUE section AB**	**VALUE section BC**
ϕ	friction angle of soil	32	32
θ	angle of wall to the y-axis	0	30
δ	wall-soil friction angle *(measured from a perpendicular with the wall)*	24	16
	=0, if significant vibrations of backfill or mod settling more than backfill.		
	= 0.5*ϕ, if modules are uniform width.		
	= 0.75*ϕ, if averaged pressure surface		
x	side slopes from road (x:1)	2.0	
α	wingwall angle (angle w/ perpendicular to road)	45	
	slope of backfill (perpendicular to wall)	26.04	
β	angle of backfill (perpendicular to wall)	2.2	7.1
	$(K_a)_{AB}$ =	0.28	$(K_a)_{BC}$ = 0.11

Anchor 2

VARIABLE	DESCRIPTION OF VARIABLE	VALUE	
H	wingwall design height at anchor location (feet)	14.12	
h_{surch}	height of live load surcharge (feet)	2.00	
t	thickness of wingwall (inches)	12	
δ	wall friction angle for section AB	24	
β	angle of backfill (degrees)	2.2	
L	length of anchor (feet)	7.04	E
γ_s	unit weight of backfill (kcf)	140	
γ_c	unit weight of concrete (kcf)	150	
γ_{surch}	unit weight of surcharge (kcf)	120	*(per AASHTO LRFD 3.11.6.4)*

Description	Vertical Reaction (k/ft)	Horizontal Reaction (k/ft)	Lever Arm (ft)	Disturbing Moment (ft-k/ft)	"Stability" Resisting Moment (ft-k/ft)	"Bearing" Resisting Moment (ft-k/ft)
wall (W_w)	2.12		0.50		1.06	1.06
soil I_A	0.13		5.69		0.61	0.76
soil I_B	10.46		4.52		37.84	47.30
soil II_A	2.08		3.13		5.21	6.51
soil II_B	0.68		6.02		3.29	4.11
$W_{surcharge}$	1.69		4.52		7.64	7.64
$W_{parapet}$	0.00		0.50		0.00	0.00
Soil Pressure						
$(P_{AB})_v$	0.95		8.04		7.64	7.64
$(P_{AB})_h$		2.14	7.13	15.22		
$(P_{BC1})_v$	-0.18		6.88		-1.27	-1.27
$(P_{BC1})_h$		0.74	1.50	1.11		
$(P_{BC2})_v$	-0.03		6.88		-0.23	-0.23
$(P_{BC2})_h$		0.14	0.83	0.11		
P_{surch}		0.87	7.19	6.27		
TOTALS =	17.90	3.88		22.72	61.78	73.52

AASHTO LRFD C11.6.3.3 states: The specified criteria for the location of the resultant, coupled with investigation of the bearing pressure, replaces the investigation of the ratio of stabilizing moment to overturning moment. See Section III Soil Bearing Pressure.

II. CHECK OVERTURNING STABILITY AT CONNECTION PLATES

The connection plates provide stability for the portion of the wall not supported by the anchors, i.e., the section closest to the culvert. (See wingwall sketch)

Data:

number of plates = 2

ϕ = 32

δ = 24

γ_s = 0.140 kcf

$\gamma_{(surcharge)}$ = 0.120 kcf

wall height @ plates (H) = **14.66 ft**

Live load surcharge (h) = **2.00 ft**

section width for plates (S) = 1.5 ft

y_{Psh} = H/3 = 4.9 ft

y_{PLL} = H/2 = 7.3 ft

y_{p1} = **3.50 ft**

y_{p2} = **8.50 ft**

A_{bolt} = 0.79

t_{plate} = 1.00 in

$\phi F_{(bolt)}$ = 30 ksi

$F_{y(plate)}$ = 36 ksi

Find soil pressure on section:

Because the wall is more rigid at the plates, at-rest soil pressure coefficient (K_o) is used.

$K_o = 1 - \sin\phi = 0.47$ *(AASHTO LRFD eq. 3.11.5.2-1)*

$P_{sh} = (^1/_2)\gamma_s K_o H^2(S)(\cos\delta) = 9.69$ K

$P_{LLh} = K_o\gamma_s HhS(\cos\delta) = 2.27$ K

$P_{impact} = P_{imp}S/L_{distr} = 0$

Find reaction at plate:

Sum moments about bottom plate, p_1

$\Sigma M_{p1} = 0 = P_{sh}(y_{Psh} - y_{p1}) - p_2(y_{p2} - y_{p1})$ *(dead load)*

$\Sigma M_{p1} = 0 = P_{LL}(y_{PLL} - y_{p1}) - p_{2LL}(y_{p2} - y_{p1}) + P_{imp}(y_{imp} - y_{p1})$ *(live load)*

$p_2 = \dfrac{P_{sh}(y_{Psh} - y_{p1})}{(y_{p2} - y_{p1})} = 2.69$ K $\qquad p_1 = P_{sh} - p_2 = 7.00$ K

$p_{2LL} = \dfrac{P_{LLh}(y_{pLL} - y_{p1}) + P_{imp}(y_{imp} - y_{p1})}{(y_{p2} - y_{p1})} = 1.74$ K $\qquad p_{1LL} = P_{LL} + P_{imp} - p_{2LL} = 0.53$ K

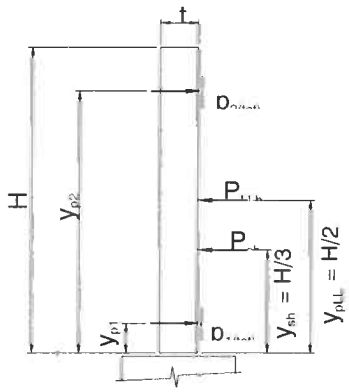

Find factored reaction:

Load factors are per AASHTO LRFD 3.4.1-1 & Table 3.4.1-2

$p_{fac} = \gamma p_{max(DL)} + (1.75)p_{max(LL)}$

$p_{fac} = (1.35)p_{(DL)} + (1.75)p_{(LL)}$

$p_{1(tot,\ factored)} = 10.38$ K ***Controls***

$p_{2(tot,\ factored)} = 6.67$ K

$p_{(max,\ factored)} = 10.38$ K

Check bolts:

The special Richmond Screw Anchor *"wingwall insert" pullout capacity was obtained from the manufacturer and has approx. 3:1 safety factor.*

Pullout capacity = 16.5 k/bolt ***Controls***

Bolt tension = $\phi F A_{bolt}$ = 23.7 k/bolt

$F.S. = \dfrac{\text{Capacity* 2 bolts}}{(p_{fac})} = 3.18$ *> 1.0, OK*

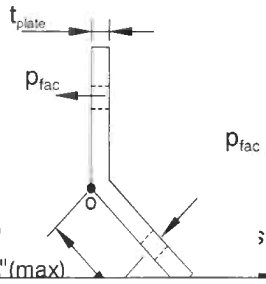

lengt *; 10"*

4.75"(max)

Check bending of plate:

Sum moments about corner of plate, point "o"

$\Sigma M_o = (p_{fac})(4.75") = 49317$ lb-in

$I_{pl} = bh^3/12 = 0.83$ in^4

$\sigma_{max} = \dfrac{My}{I_{pl}} = 30$ ksi $\quad < \phi F_y = 0.9F_y$ *OK*

(AISC LRFD-F2 states $\phi_b = 0.9$)

III. CHECK SOIL BEARING PRESSURE AND SLIDING UNDER CAST-IN-PLACE FOOTING

The reaction will be supported on the horizontal portion of the anchor plus the footing.

R_v = Total vertical reaction at anchor (using 100% of soil weight).

R_h = Total horizontal reaction at anchor.

M_D = Disturbing moment at anchor.

M_{Rb} = Resisting moment due to 100% of soil at anchor.

Summary of loads at anchors

anchor	anchor base length	R_v ($^K/_F$)	R_h ($^K/_F$)	M_D ($^{K\text{-}F}/_F$)	M_{Rb} ($^{K\text{-}F}/_F$)
1	4.73	16.95	3.82	21.68	70.11
2	4.73	17.90	3.88	22.72	73.52
3	3.73	0.00	0.00	0.00	0.00
4	3.73	0.00	0.00	0.00	0.00
5	3.73	0.00	0.00	0.00	0.00

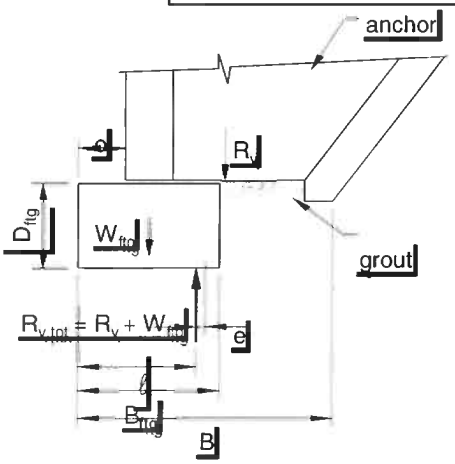

Check the bearing pressure under the wall

D_{ftg} = 2.0 ft

B_{ftg} = 3.5 ft

o = 15 in

W_{ftg} = 1.05 klf

Q_n = 10.0 KSF

Q_b = Factored bearing resistance

Load Factors

γ_{EV} = 1.35

γ_{DC} = 1.25

γ_{LS} = 1.75

Resistance Factors

ϕ_B = 0.45

B = bearing width

= maximum of (anchor base length + o) or B_{ftg}

ℓ = location of vertical resultant ($R_{v,tot}$) along bearing width

$$= \frac{R_v((M_{Rb}-M_D)/R_v + o) + W_{ftg}(B/2)}{R_{v,tot}}$$

e = eccentricity of resultant

= B/2 - ℓ

B' = adjusted bearing width

= B - 2e

q = factored bearing pressure *(must be less than Q_b)*

= $R_{v,tot}$ / B'

Check bearing pressure at each anchor

anchor	B (ft)	ℓ (ft)	e	check e	B' (ft)	q	Q_b	check q
1	6.98	3.97	-0.48	*OK*	6.02	4.10	4.50	*OK*
2	6.98	3.96	-0.47	*OK*	6.04	3.85	4.50	*OK*
3	0.00	0.00	0.00	*n/a*	0.00	0.00	4.50	*n/a*
4	0.00	0.00	0.00	*n/a*	0.00	0.00	4.50	*n/a*
5	0.00	0.00	0.00	*n/a*	0.00	0.00	4.50	*n/a*

Check the sliding factor of safety

$R_R = \phi * R_{v,tot} * .8 * \tan \phi$ *(AASHTO LRFD 10.6.3.4)*

(must be $> R_h$)

$\phi =$ 0.9 *from AASHTO LRFD Table 10.5.5.2.2-1 for precast concrete on sand*

Check sliding at each anchor

anchor	$R_{v,tot}$ (k/f)	R_R (k/f)	R_h	check $R_R > R_h$
1	18.00	8.10	3.82	*OK*
2	18.95	8.53	3.88	*OK*
3	0.00	0.00	0.02	*n/a*
4	0.00	0.00	0.02	*n/a*
5	0.00	0.00	0.02	*n/a*

IV. CHECK BENDING OF FOOTING CROSS SECTION

Bending need not be considered in footings when the footing depth, D, exceeds the projection, pr, of the footing beyond the edge of the wall.

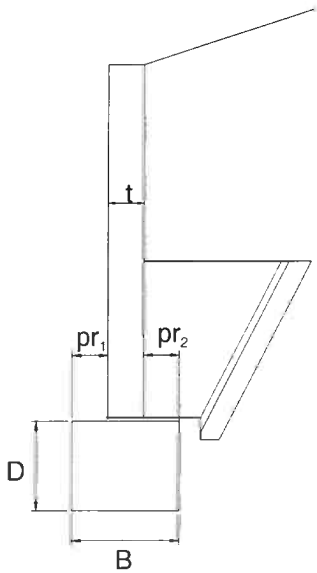

pr_1 = offset(o) = 15 in

pr_2 = B - o - t = 15 in **Controls**

pr_{max} = 15 in

projection < D *OK*

Use minimal steel stirrups
#4 @ 48 inches o.c.

V. CHECK WALL SECTION - BENDING AND SHEAR (vertical bars)

Assumptions: *1. Wall stem is cantilevered from anchor.*
2. Use active earth pressure because wall can deflect at top.
3. Use K_a and δ from Anchor Stability Calculations.

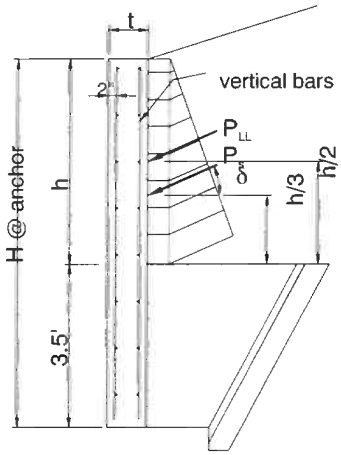

Horizontal loads:

$P_{sh} = (^1/_2)\gamma_s K_a h^2(\cos\delta)$

$P_{LLh} = \gamma_s K_a h(h_{surcharge})(\cos\delta)$

$P_{impact} = P_{imp}/L_{distr}$

Factored forces:

Load factors are per AASHTO LRFD 3.4.1-1 & Table 3.4.1-2

M_u = Section width$[(1.35)P_{sh}(h/3) + (1.75)P_{LLh}(h/2) + (1.75)P_{imp}(h+y_{imp})]$

V_u = Section width$[(1.35)P_{sh} + (1.75P_{LLh} + (1.75P_{imp}]$

Summary of forces at anchors

anchor	H (ft)	h (ft)	$h_{surcharge}$ (ft)	P_{sh} (k/ft)	P_{LLh} (k/ft)	P_{imp} (k/ft)	M_u (k-ft)	V_u (k)
1	13.03	9.53	2.00	1.74	0.63	0.00	63.52	17.25
2	14.12	10.62	2.00	2.03	0.66	0.00	55.28	13.61
3	0.00	0.00	2.00	0.00	0.00	0.00	0.00	0.00
4	0.00	0.00	2.00	0.00	0.00	0.00	0.00	0.00
5	0.00	0.00	2.00	0.00	0.00	0.00	0.00	0.00

Check bending (reinforcment) at anchors

f'_c = **5000 psi**

f_y = **60000 psi**

ϕ_b = **0.9** *(AASHTO LRFD 5.4.2.1)*

$m = f_y/0.85f'_c$ = 14.12

d = 9.56 in

b = anchor's contrib. width

$$R_u = \frac{M_u}{\phi_b b d^2}$$

$$\rho_{reqd} = \frac{1}{m}\left(1-\sqrt{1-\frac{2mR_u}{f_y}}\right)$$

ρ_{min} = *AASHTO LRFD 5.7.3.3.2 states the minimum reinforcement is the lesser of 1.2Mcr OR 1.33 times the factored moment required by strength.*

anchor	R_u (psi)	ρ_{reqd}	ρ_{cr}	ρ_{min}	$A_{s\,min}$ (in^2)	$A_{s\,actual}$ (in^2)	check
1	154	0.0026	0.0032	0.0032	1.82	3.06	OK
2	192	0.0033	0.0032	0.0033	1.32	4.06	OK
3	0	0.0000	0.0032	0.0000	0.00	#VALUE!	N/A
4	0	0.0000	0.0032	0.0000	0.00	#VALUE!	N/A
5	0	0.0000	0.0032	0.0000	0.00	#VALUE!	N/A

Check shear

$V_c = (.0316)*\beta \sqrt{f'_c}\, b_v d_v$ *(V_c calculated by AASHTO LRFD eq'n 5.8.3.3-3)*

$\phi = 0.9$ *(AASHTO LRFD 5.5.4.2.1)*

$\beta = 2$ *(AASHTO LRFD 5.8.3.4.1)*

$d_v = .9*d$ or $.72*h$ *whichever is greater (AASHTO LRFD 5.8.2.9)*

anchor	ϕV_c	check $V_u < \phi V_c$
1	65.93	*OK*
2	46.15	*OK*
3	0.00	*N/A*
4	0.00	*N/A*
5	0.00	*N/A*

VI. CHECK TYPE 'E' ANCHOR ATTACHMENT

Check capacity of connector for pullout (truncated pyramid failure), shear, tension, and combined shear & tension

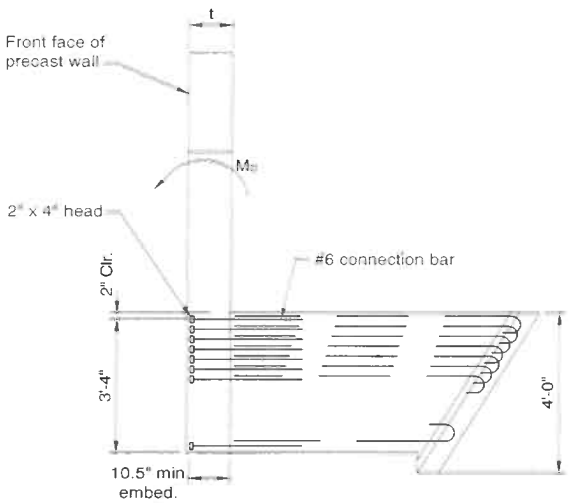

embedment depth (l_e) = **10.5 in**

Attachment depth = 42 in
X head dimension (Xd_{head}) = 3 in
Y head dimension (Yd_{head}) = 3 in
Bar size = **# 6**
rows = **7**
row spacing = **3 in**
wall thickness (t) = 12 in
x = Xd_{head} (*since only 1 column*) = 3 in
y = (#rows-1)(row spacing) + Yd_{head} = 21 in
z = min(x,y) = 3 in
h_{min} = (z + l_e)/z = 12.0 in
A_R = (x+2 l_e-2t)(y+2 l_e-2t) = 0.0 in^2

f'_c = **5000 psi**
f_y = **60000 psi**
$\phi_{concrete}$ = 0.85
ϕ_{steel} = 0.90

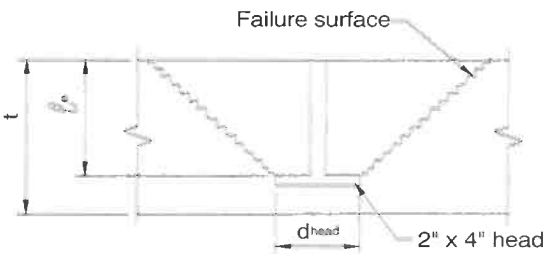

TENSION CAPACITY (Per PCI Design Handbook §6.5.2.1)

t > hmin: failure surface does not penetrate slab

Find pullout capacity of concrete

if t >= h_{min}, $\phi P_c = \phi 2.67 sqrt(f'c)(x+2\ e)(y+2\ e)$

if t < h_{min}, $\phi P_c = \phi 2.67 sqrt(f'c)[(x+2\ e)(y+2\ e) - A_R]$

ϕP_c = 161.76 K

Find tension capacity of studs

$\phi P_y = \phi f_y(A_{bar})$(#bars)

ϕP_y = 167.00 K

controlling tension capacity (ϕP) = 161.76 K

Find moment capacity of anchor

Moment capacity of anchor (ϕM_n) = $\phi P(d-a/2)$

d = attachment depth - bar cover - $(y-Yd_{head})/2$ = 31 in

a = $A_s f_y/0.85 f'_c b$ = 7.28 in

ϕM_n = 368.84 k-f

SHEAR CAPACITY (Per PCI Design Handbook §6.5.2.2)

Find shear capacity of concrete

$\phi V_c = \phi V'_c C_w C_t C_c$

$\phi V'_c = \phi 12.5 d_e^{1.5} \text{sqrt}(f'_c)$	= 187.4 K
$C_w = 1 + \text{spacing}/3.5d_e < \#\text{columns}$	= 1.0
$C_t = t/1.3d_e <= 1.0$	= 0.23
$C_c = 0.4 + 0.7d_c/de <= 1.0$	= 1.0
d_e = attachment depth - cover - bar dia/2	= 40 in
d_c = distance to side of wingwall	= 36 in

$\phi V_c = \phi V'_c C_w C_t C_c =$ 43.66 K

Find shear capacity of studs

$\phi V_y = \phi 0.9 f_y A_{bar}(\#\text{bars})$

$\phi V_y =$ 150.30 K

controlling shear capacity (ϕV) = 43.66 K

FIND LOADS

Unfactored loads on anchors:

$M_{D(DL)}$ = (sec width)$M_{D(anchor)}$

$M_{D(LL)}$ = (sec width)($M_{D(anchor)}$ + P_{imp}*(wall ht + y_{imp}))

Factored loads:

Load factors are per AASHTO 3.22.1 & Table 3.22.1A

$M_u = (1.3)(1.3)M_{D(DL)} + (1.3)(1.67)M_{D(LL)}$

$P_u = M_u$ /(d-a/2)*cos(bar angle)

$V_u = M_u$ /(d-a/2)*sin(bar angle)

bar angle = 0°

Summary of forces

anchor	$M_{D(DL)}$ ft-k	$M_{D(LL)}$ ft-k	M_u ft-k	P_u k	V_u k
1	78.6	29.8	197.5	86.6	0.0
2	57.6	22.0	145.0	63.6	0.0
3	0.0	0.0	0.0	0.0	0.0
4	0.0	0.0	0.0	0.0	0.0
5	0.0	0.0	0.0	0.0	0.0

Summary of results

anchor	check $\phi M_n > M_u$	check $\phi P > P_u$	check $\phi V > V_u$	check combined V_c & P_c	check combined V_s & P_s
1	OK	OK	OK	OK	OK
2	OK	OK	OK	OK	OK
3	n/a	n/a	n/a	n/a	n/a
4	n/a	n/a	n/a	n/a	n/a
5	n/a	n/a	n/a	n/a	n/a

Section 9
CSI LRFD Wing Wall 3A Calculations

Concrete Systems Inc.
9 Commercial St., Hudson, NH.03051
Phone 603-889-4163
Fax 603-889-2417

AASHTO LRFD WINGWALL CALCULATIONS

PROJECT NUMBER: VT/AOT BRIDGE REPLACEMENT RICHFORD, VT. Wingwall 3A
PROJECT NAME:
DATE: May 19, 2015
BY:

INPUT PARAMETERS:

Wall geometry

Panel Height (high) = 15.24 ft
Panel Height (low) = 13.38 ft
Wall Panel Length = 9.00 ft
Entire Wall length = 18.00 ft
Length of flat = 1.00 ft
wall thickness = 12
Wingwall Drop *(high-low)* = 1.86 ft
Wall slope = 0.2325
Max fill ht. *(t/road to b/ww)* = 15.24 ft
Fill Slope *(perp. to road)* = 2.0
Wall angle *(perp. to road)* = 60
Fill slope *(perp. to wall)* = 2.31
Wingwall Panel Connected to Bridge Unit= ☑ Yes

Soil properties

γ_{soil} = 140 pcf
γ_{conc} = 150 pcf
$\gamma_{LLsurcharge}$ = 120 pcf
ϕ_{AB} = 32
θ_{AB} = 0
δ_{AB} = 24
ϕ_{BC} = 32
θ_{BC} = 30
δ_{BC} = 16

Foundation

D_{ftg} = 2.0 ft
B_{ftg} = 3.5 ft
o = 15 in
Q_n = 10.0 KSF
NONE

Railing or barrier

T/WW to load = 2.00 ft
impact load = 10.00 K

	Distance to anchor	Overriding perp. slope @ anchor	Wall height @ anchor	Contrib. width	Perp. slope used @ anchor	h_{eq} LL surch	Anchor Type	Check 'e' & Bearing
Anchor #1	2.00 ft	n	13.85 ft	4.00 ft	9.92 ft	2.00 ft	E	OK
Anchor #2	6.00 ft	n	14.78 ft	3.50 ft	31.77 ft	2.00 ft	E	OK
Anchor #3	0.00 ft	n	0.00 ft	0.00 ft	2.31 ft	2.00 ft	E	N/A
Anchor #4	0.00 ft	n	0.00 ft	0.00 ft	2.31 ft	2.00 ft	E	N/A
Anchor #5	0.00 ft	n	0.00 ft	0.00 ft	2.31 ft	2.00 ft	D	N/A

RESULTS SUMMARY				
Mesh (in back of wall)				
0.13	in^2/ft	(vertical/back)		
0.13	in^2/ft	(horizontal/face)		
Reinforcing @ anchor				Anchor Attachment
bar size	number	check bars	eck sh	check
7	4	OK	OK	OK
7	6	OK	OK	OK
-	-	N/A	N/A	OK
-	-	N/A	N/A	OK
-	-	N/A	N/A	OK
LL Surch @ Plates ☐				
add'l reinf in FF: *no add'l ff reinf.*				

CALCULATION NOTES:

1. Wingwall calculations are done in accordance with the current edition of the *AASHTO LRFD Bridge Design Specifications*.
2. Moments are summed about the *toe (face) of the wingwall* (point "o" on attached "Pressure Diagram").
3. K_a is calculated using equation found in former AASHTO LRFD Specifications Equation 3.11.5.3-1

$$K_a = \frac{\sin^2(\phi + \theta)}{\sin^2\theta \sin(\theta - \delta)\left[1 + \sqrt{\frac{\sin(\phi + \delta)\sin(\phi - \beta)}{\sin(\theta - \delta)\sin(\theta + \beta)}}\right]^2}$$

4. Only 80% of the soil unit weight is used for the eccentricity/ stability calculation. This is a conservative assumption as explained in the full HITEC report "Evaluation of the CON/SPAN® Wingwall System"
5. The full 100% of the soil unit weight is used for the bearing calculations.
6. These calculations conservatively assume that the wall anchor has the same unit weight as soil.
7. The wingwall angle (in plan view) is measured from perpendicular to roadway.
8. Barrier loads are distributed per AASHTO LRFD Specifications Section 13

Anchor 1			
SOIL PROPERTY	**DESCRIPTION**	**VALUE section AB**	**VALUE section BC**
ϕ	friction angle of soil	32	32
θ	angle of wall to the y-axis	0	30
δ	wall-soil friction angle *(measured from a perpendicular with the wall)* =0, if significant vibrations of backfill or modules settling more than backfill. = 0.5*ϕ, if modules are uniform width. = 0.75*ϕ, if averaged pressure surface	24	16
x	side slopes from road (x:1)	2.0	
α	wingwall angle (angle w/ perpendicular to road)	60	
	slope of backfill (perpendicular to wall)	9.92	
β	angle of backfill (perpendicular to wall)	5.8	5.8
	$(K_a)_{AB}$ =	0.29	$(K_a)_{BC}$ = 0.11

Anchor 1

VARIABLE	DESCRIPTION OF VARIABLE	VALUE	
H	wingwall design height at anchor location (feet)	13.85	
h_{surch}	height of live load surcharge (feet)	2.00	
t	thickness of wingwall (inches)	12	
δ	wall friction angle for section AB	24	
β	angle of backfill (degrees)	5.8	
L	length of anchor (feet)	7.04	E
γ_s	unit weight of backfill (kcf)	140	
γ_c	unit weight of concrete (kcf)	150	
γ_{surch}	unit weight of surcharge (kcf)	120	*(per AASHTO LRFD 3.11.6.4)*

Description	Vertical Reaction (k/ft)	Horizontal Reaction (k/ft)	Lever Arm (ft)	Disturbing Moment (ft-k/ft)	"Stability" Resisting Moment (ft-k/ft)	"Bearing" Resisting Moment (ft-k/ft)
wall (W_w)	2.08		0.50		1.04	1.04
soil I_A	0.35		5.69		1.59	1.99
soil I_B	10.20		4.52		36.87	46.09
soil II_A	2.08		3.13		5.21	6.51
soil II_B	0.68		6.02		3.29	4.11
$W_{surcharge(vert)}$	1.69		4.52		7.64	7.64
$W_{parapet}$	0.00		0.50		0.00	0.00
Soil Pressure						
$(P_{AB})_v$	1.02		8.04		8.24	8.24
$(P_{AB})_h$		2.30	7.18	16.53		
$(P_{BC1})_v$	-0.19		6.89		-1.33	-1.33
$(P_{BC1})_h$		0.78	1.50	1.16		
$(P_{BC2})_v$	-0.03		6.50		-0.23	-0.23
$(P_{BC2})_h$		0.14	0.83	0.12		
$P_{surcharch(hor)}$		0.89	7.28	6.50		
TOTALS =	17.87	4.11		24.32	62.31	74.05

AASHTO LRFD C11.6.3.3 states: The specified criteria for the location of the resultant, coupled with investigation of the bearing pressure, replaces the investigation of the ratio of stabilizing moment to overturning moment. See Section III Soil Bearing Pressure.

Anchor 2			
SOIL PROPERTY	**DESCRIPTION**	**VALUE section AB**	**VALUE section BC**
ϕ	friction angle of soil	32	32
θ	angle of wall to the y-axis	0	30
δ	wall-soil friction angle *(measured from a perpendicular with the wall)* =0, if significant vibrations of backfill or modules settling more than backfill. = 0.5*ϕ, if modules are uniform width. = 0.75*ϕ, if averaged pressure surface	24	16
x	side slopes from road (x:1)	2.0	
α	wingwall angle (angle w/ perpendicular to road)	60	
	slope of backfill (perpendicular to wall)	31.77	
β	angle of backfill (perpendicular to wall)	1.8	5.8
	$(K_a)_{AB}$ =	0.28	$(K_a)_{BC}$ = 0.11

Anchor 2

VARIABLE	DESCRIPTION OF VARIABLE	VALUE	
H	wingwall design height at anchor location (feet)	14.78	
h_{surch}	height of live load surcharge (feet)	2.00	
t	thickness of wingwall (inches)	12	
δ	wall friction angle for section AB	24	
β	angle of backfill (degrees)	1.8	
L	length of anchor (feet)	7.04	E
γ_s	unit weight of backfill (kcf)	140	
γ_c	unit weight of concrete (kcf)	150	
γ_{surch}	unit weight of surcharge (kcf)	120	*(per AASHTO LRFD 3.11.6.4)*

Description	Vertical Reaction (k/ft)	Horizontal Reaction (k/ft)	Lever Arm (ft)	Disturbing Moment (ft-k/ft)	"Stability" Resisting Moment (ft-k/ft)	"Bearing" Resisting Moment (ft-k/ft)
wall (W_w)	2.22		0.50		1.11	1.11
soil I_A	0.11		5.69		0.50	0.62
soil I_B	11.11		4.52		40.18	50.23
soil II_A	2.08		3.13		5.21	6.51
soil II_B	0.68		6.02		3.29	4.11
$W_{surcharge}$	1.69		4.52		7.64	7.64
$W_{parapet}$	0.00		0.50		0.00	0.00
Soil Pressure						
$(P_{AB})_v$	1.05		8.04		8.48	8.48
$(P_{AB})_h$		2.37	7.33	17.37		
$(P_{BC1})_v$	-0.19		6.88		-1.34	-1.34
$(P_{BC1})_h$		0.78	1.50	1.17		
$(P_{BC2})_v$	-0.03		6.88		-0.23	-0.23
$(P_{BC2})_h$		0.14	0.83	0.11		
P_{surch}		0.91	7.50	6.81		
TOTALS =	18.72	4.19		25.47	64.83	77.13

AASHTO LRFD C11.6.3.3 states: The specified criteria for the location of the resultant, coupled with investigation of the bearing pressure, replaces the investigation of the ratio of stabilizing moment to overturning moment. See Section III Soil Bearing Pressure.

II. CHECK OVERTURNING STABILITY AT CONNECTION PLATES

The connection plates provide stability for the portion of the wall not supported by the anchors, i.e., the section closest to the culvert. (See wingwall sketch)

Data:

number of plates = 2

ϕ = 32

δ = 24

γ_s = 0.140 kcf

$\gamma_{(surcharge)}$ = 0.120 kcf

wall height @ plates (H) = **15.24 ft**

Live load surcharge (h) = **2.00 ft**

section width for plates (S) = 1.5 ft

$y_{Psh} = H/3$ = 5.1 ft

$y_{PLL} = H/2$ = 7.6 ft

y_{p1} = **3.50 ft**

y_{p2} = **8.50 ft**

A_{bolt} = 0.79

t_{plate} = 1.00 in

$\phi F_{(bolt)}$ = 30 ksi

$F_{y(plate)}$ = 36 ksi

Find soil pressure on section:

Because the wall is more rigid at the plates, at-rest soil pressure coefficient (K_o) is used.

$K_o = 1\text{-}\sin\phi = 0.47$ *(AASHTO LRFD eq. 3.11.5.2-1)*

$P_{sh} = (^1/_2)\gamma_s K_o H^2(S)(\cos\delta) = 10.47$ K

$P_{LLh} = K_o\gamma_s HhS(\cos\delta) = 2.36$ K

$P_{impact} = P_{imp}S/L_{distr} = 0$

Find reaction at plate:

Sum moments about bottom plate, p_1

$\Sigma M_{p1} = 0 = P_{sh}(y_{Psh} - y_{p1}) - p_2(y_{p2} - y_{p1})$ *(dead load)*

$\Sigma M_{p1} = 0 = P_{LL}(y_{PLL} - y_{p1}) - p_{2LL}(y_{p2} - y_{p1}) + P_{imp}(y_{imp} - y_{p1}$ *(live load)*

$p_2 = \dfrac{P_{sh}(y_{Psh} - y_{p1})}{(y_{p2} - y_{p1})} = 3.31$ K $\qquad p_1 = P_{sh} - p_2 = 7.16$ K

$p_{2LL} = \dfrac{P_{LLh}(y_{pLL} - y_{p1}) + P_{imp}(y_{imp} - y_{p1})}{(y_{p2} - y_{p1})} = 1.94$ K $\qquad p_{1LL} = P_{LL} + P_{imp} - p_{2LL} = 0.41$ K

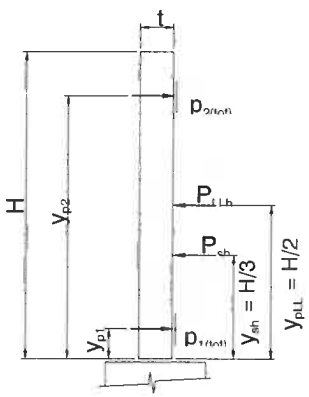

Find factored reaction:

Load factors are per AASHTO LRFD 3.4.1-1 & Table 3.4.1-2

$p_{fac} = \gamma p_{max(DL)} + (1.75)p_{max(LL)}$

$p_{fac} = (1.35)p_{(DL)} + (1.75)p_{(LL)}$

$p_{1(tot,\ factored)}$ = 10.40 K ***Controls***

$p_{2(tot,\ factored)}$ = 7.87 K

$p_{(max,\ factored)}$ = 10.40 K

Check bolts:

The special Richmond Screw Anchor *"wingwall insert" pullout capacity was obtained from the manufacturer and has approx. 3:1 safety factor.*

Pullout capacity = 16.5 k/bolt ***Controls***

Bolt tension = $\phi F A_{bolt}$ = 23.7 k/bolt

$F.S. = \dfrac{\text{Capacity* 2 bolts}}{(p_{fac})} = 3.17$ *> 1.0, OK*

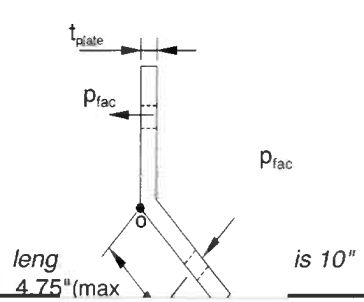

Check bending of plate:

Sum moments about corner of plate, point "o"

$\Sigma M_o = (p_{fac})(4.75") = 49382$ lb-in

$I_{pl} = bh^3/12 = 0.83$ in^4

$\sigma_{max} = \dfrac{My}{I_{pl}} = 30$ ksi $\quad < \phi F_y = 0.9F_y$ *OK*

(AISC LRFD-F2 states $\phi_b = 0.9$)

III. CHECK SOIL BEARING PRESSURE AND SLIDING UNDER CAST-IN-PLACE FOOTING

The reaction will be supported on the horizontal portion of the anchor plus the footing.

R_v = Total vertical reaction at anchor (using 100% of soil weight).

R_h = Total horizontal reaction at anchor.

M_D = Disturbing moment at anchor.

M_{Rb} = Resisting moment due to 100% of soil at anchor.

Summary of loads at anchors

anchor	anchor base length	R_v ($^K/_F$)	R_h ($^K/_F$)	M_D ($^{K\text{-}F}/_F$)	M_{Rb} ($^{K\text{-}F}/_F$)
1	4.73	17.87	4.11	24.32	74.05
2	4.73	18.72	4.19	25.47	77.13
3	4.73	0.00	0.00	0.00	0.00
4	4.73	0.00	0.00	0.00	0.00
5	3.73	0.00	0.00	0.00	0.00

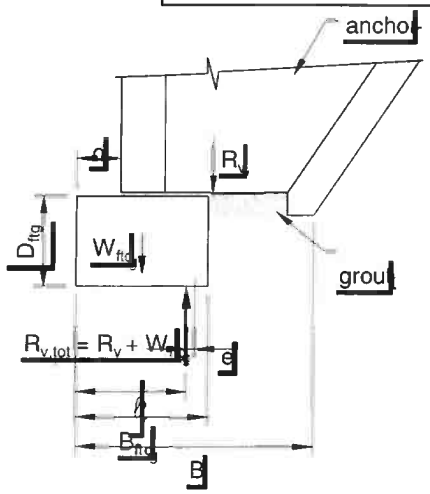

Check the bearing pressure under the wall

D_{ftg} = 2.0 ft

B_{ftg} = 3.5 ft

o = 15 in

W_{ftg} = 1.05 klf

Q_n= 10.0 KSF

Q_b = Factored bearing resistanc

Load Factors

γ_{EV} = 1.35

γ_{DC} = 1.25

γ_{LS} = 1.75

Resistance Factors

ϕ_B= 0.45

B = bearing width

= maximum of (anchor base length + o) or B_{ftg}

ℓ = location of vertical resultant ($R_{v,tot}$) along bearing width

$$= \frac{R_v((M_{Rb}-M_D)/R_v + o) + W_{ftg}(B/2)}{R_{v,tot}}$$

e = eccentricity of resultant

= B/2 - ℓ

B' = adjusted bearing width

= B - 2e

q = factored bearing pressure *(must be less than Q_b)*

= $R_{v,tot}$ / B'

Check bearing pressure at each anchor

anchor	B (ft)	ℓ (ft)	e	check e	B' (ft)	q	Q_b	check q
1	6.98	3.91	-0.42	*OK*	6.15	4.21	4.50	*OK*
2	6.98	3.89	-0.40	*OK*	6.18	3.95	4.50	*OK*
3	0.00	0.00	0.00	*n/a*	0.00	0.00	4.50	*n/a*
4	0.00	0.00	0.00	*n/a*	0.00	0.00	4.50	*n/a*
5	0.00	0.00	0.00	*n/a*	0.00	0.00	4.50	*n/a*

Check the sliding factor of safety

$R_R = \phi * R_{V,tot} * .8 * \tan \phi$ *(AASHTO LRFD 10.6.3.4)*

(must be $> R_h$)

$\phi =$ 0.9 *from AASHTO LRFD Table 10.5.5.2.2-1 for precast concrete on sand*

Check sliding at each anchor

anchor	$R_{v,tot}$ (k/f)	R_R (k/f)	R_h	check $R_R > R_h$
1	18.92	8.52	4.11	*OK*
2	19.77	8.90	4.19	*OK*
3	0.00	0.00	0.02	*n/a*
4	0.00	0.00	0.02	*n/a*
5	0.00	0.00	0.02	*n/a*

IV. CHECK BENDING OF FOOTING CROSS SECTION

Bending need not be considered in footings when the footing depth, D, exceeds the projection, pr, of the footing beyond the edge of the wall.

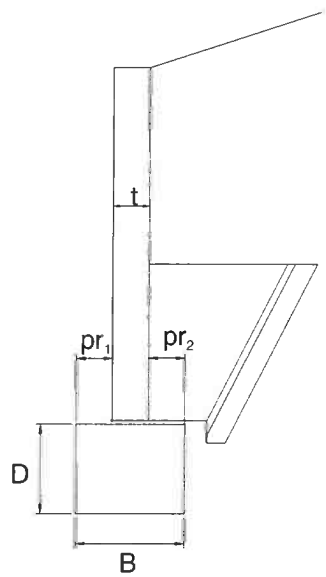

pr_1 = offset(o) = 15 in

pr_2 = B - o - t = 15 in ***Controls***

pr_{max} = 15 in

projection < D *OK*

Use minimal steel stirrups
#4 @ 48 inches o.c.

V. CHECK WALL SECTION - BENDING AND SHEAR (vertical bars)

Assumptions: *1. Wall stem is cantilevered from anchor.*
2. Use active earth pressure because wall can deflect at top.
3. Use K_a and δ from Anchor Stability Calculations.

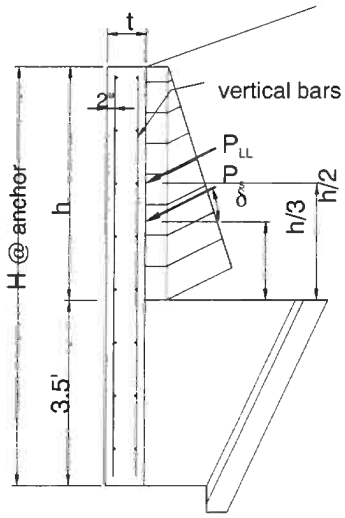

Horizontal loads:

$P_{sh} = (^1/_2)\gamma_s K_a h^2(\cos\delta)$

$P_{LLh} = \gamma_s K_a h(h_{surcharge})(\cos\delta)$

$P_{impact} = P_{imp}/L_{distr}$

Factored forces:

Load factors are per AASHTO LRFD 3.4.1-1 & Table 3.4.1-2

M_u = Section width$[(1.35)P_{sh}(h/3) + (1.75)P_{LLh}(h/2) + (1.75)P_{imp}(h+y_{imp})]$

V_u = Section width$[(1.35)P_{sh} + (1.75P_{LLh} + (1.75P_{imp}]$

Summary of forces at anchors

anchor	H (ft)	h (ft)	$h_{surcharge}$ (ft)	P_{sh} (k/ft)	P_{LLh} (k/ft)	P_{imp} (k/ft)	M_u (k-ft)	V_u (k)
1	13.85	10.35	2.00	2.02	0.67	0.00	61.71	15.56
2	14.78	11.28	2.00	2.28	0.69	0.00	64.40	15.01
3	0.00	0.00	2.00	0.00	0.00	0.00	0.00	0.00
4	0.00	0.00	2.00	0.00	0.00	0.00	0.00	0.00
5	0.00	0.00	2.00	0.00	0.00	0.00	0.00	0.00

Check bending (reinforcment) at anchors

f'_c = **5000 psi**

f_y = **60000 psi**

ϕ_b = **0.9** *(AASHTO LRFD 5.4.2.1)*

$m = f_y/0.85f'_c$ = 14.12

d = 9.56 in

b = anchor's contrib. width

$$R_u = \frac{M_u}{\phi_b b d^2}$$

$$\rho_{reqd} = \frac{1}{m}\left(1-\sqrt{1-\frac{2mR_u}{f_y}}\right)$$

ρ_{min} = *AASHTO LRFD 5.7.3.3.2 states the minimum reinforcement is the lesser of 1.2Mcr OR 1.33 times the factored moment required by strength.*

anchor	R_u (psi)	ρ_{reqd}	ρ_{cr}	ρ_{min}	$A_{s\,min}$ (in^2)	$A_{s\,actual}$ (in^2)	check
1	187	0.0032	0.0032	0.0032	1.47	2.93	*OK*
2	224	0.0038	0.0032	0.0038	1.54	4.06	*OK*
3	0	0.0000	0.0032	0.0000	0.00	#######	*N/A*
4	0	0.0000	0.0032	0.0000	0.00	#######	*N/A*
5	0	0.0000	0.0032	0.0000	0.00	#######	*N/A*

Check shear

$V_c = (.0316)*\beta \sqrt{f'_c}\, b_v d_v$ *(V_c calculated by AASHTO LRFD eq'n 5.8.3.3-3)*

$\phi = 0.9$ *(AASHTO LRFD 5.5.4.2.1)*

$\beta = 2$ *(AASHTO LRFD 5.8.3.4.1)*

$d_v = .9*d$ or $.72*h$ *whichever is greater (AASHTO LRFD 5.8.2.9)*

anchor	ϕV_c	check $V_u < \phi V_c$
1	52.75	*OK*
2	46.15	*OK*
3	0.00	*N/A*
4	0.00	*N/A*
5	0.00	*N/A*

VI. CHECK TYPE 'E' ANCHOR ATTACHMENT

Check capacity of connector for pullout (truncated pyramid failure), shear, tension, and combined shear & tension

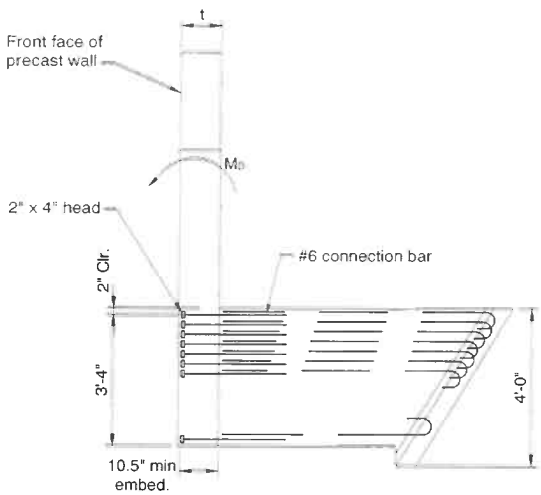

embedment depth (l_e) = **10.5 in**

Attachment depth = 42 in
X head dimension (Xd_{head}) = 3 in
Y head dimension (Yd_{head}) = 3 in
Bar size = **# 6**
rows = **7**
row spacing = **3 in**
wall thickness (t) = 12 in
x = Xd_{head} (*since only 1 column*) = 3 in
y = (#rows-1)(row spacing) + Yd_{head} = 21 in
z = min(x,y) = 3 in
h_{min} = (z + l_e)/z = 12.0 in
A_R = (x+2l_e-2t)(y+2l_e-2t) = 0.0 in^2

f'_c = **5000 psi**
f_y = **60000 psi**
$\phi_{concrete}$ = 0.85
ϕ_{steel} = 0.90

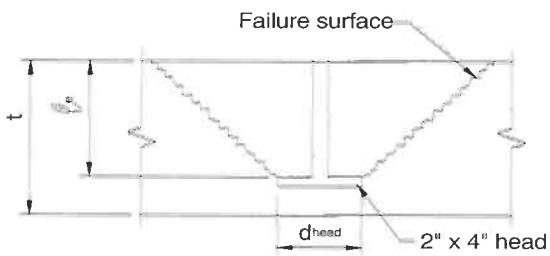

TENSION CAPACITY (Per PCI Design Handbook §6.5.2.1)

t > hmin: failure surface does not penetrate slab

Find pullout capacity of concrete

if t >= h_{min}, $\phi P_c = \phi 2.67 sqrt(f'c)(x+2l_e)(y+2l_e)$

if t < h_{min}, $\phi P_c = \phi 2.67 sqrt(f'c)[(x+2l_e)(y+2l_e) - A_R]$

ϕP_c = 161.76 K

Find tension capacity of studs

$\phi P_y = \phi f_y(A_{bar})(\#bars)$

ϕP_y = 167.00 K

controlling tension capacity (ϕP) = 161.76 K

Find moment capacity of anchor

Moment capacity of anchor (ϕM_n) = $\phi P(d-a/2)$

d = attachment depth - bar cover - $(y-Yd_{head})/2$ = 31 in

a = $A_s f_y/0.85 f'_c b$ = 7.28 in

ϕM_n = 368.84 k-f

SHEAR CAPACITY (Per PCI Design Handbook §6.5.2.2)

Find shear capacity of concrete

$\phi V_c = \phi V'_c C_w C_t C_c$

$\phi V'_c = \phi 12.5 d_e^{1.5} \text{sqrt}(f'_c)$	= 187.4 K
C_w = 1 + spacing/3.5d_e < #columns	= 1.0
C_t = t/1.3d_e <= 1.0	= 0.23
C_c = 0.4 + 0.7d_c/de <= 1.0	= 0.8
d_e = attachment depth - cover - bar dia/2	= 40 in
d_c = distance to side of wingwall	= 24 in

$\phi V_c = \phi V'_c C_w C_t C_c$ = 35.97 K

Find shear capacity of studs

$\phi V_y = \phi 0.9 f_y A_{bar}$(#bars)

ϕV_y = 150.30 K

controlling shear capacity (ϕ V) = 35.97 K

FIND LOADS

Unfactored loads on anchors:

$M_{D(DL)}$ = (sec width)$M_{D(anchor)}$

$M_{D(LL)}$ = (sec width)($M_{D(anchor)}$ + P_{imp}*(wall ht + y_{imp}))

Factored loads:

Load factors are per AASHTO 3.22.1 & Table 3.22.1A

M_u = (1.3)(1.3)$M_{D(DL)}$ +(1.3)(1.67)$M_{D(LL)}$

P_u = M_u /(d-a/2)*cos(bar angle)

V_u = M_u /(d-a/2)*sin(bar angle)

bar angle = 0°

Summary of forces

anchor	$M_{D(DL)}$ ft-k	$M_{D(LL)}$ ft-k	M_u ft-k	P_u k	V_u k
1	71.2	26.0	176.9	77.6	0.0
2	65.3	23.8	162.1	71.1	0.0
3	0.0	0.0	0.0	0.0	0.0
4	0.0	0.0	0.0	0.0	0.0
5	0.0	0.0	0.0	0.0	0.0

Summary of results

anchor	check $\phi M_n > M_u$	check $\phi P > P_u$	check $\phi V > V_u$	check combined V_c & P_c	check combined V_s & P_s
1	OK	OK	OK	OK	OK
2	OK	OK	OK	OK	OK
3	OK	OK	OK	OK	OK
4	OK	OK	OK	OK	OK
5	n/a	n/a	n/a	n/a	n/a

Section 10
CSI LRFD Wing Wall 3B Calculations

Concrete Systems Inc.
9 Commercial St., Hudson, NH,03051
Phone 603-889-4163
Fax 603-889-2417

AASHTO LRFD WINGWALL CALCULATIONS

PROJECT NUMBER: VT/AOT BRIDGE REPLACEMENT RICHFORD, VT.
PROJECT NAME:
DATE: May 19, 2015
BY:

Wingwall 3B

INPUT PARAMETERS:

Wall geometry

Panel Height (high) = 13.38 ft
Panel Height (low) = 11.52 ft
Wall Panel Length = 9.00 ft
Entire Wall length = 18.00 ft
Length of flat = 0.00 ft
wall thickness = 12
Wingwall Drop *(high-low)* = 1.86 ft
Wall slope = 0.2067
Max fill ht. *(t/road to b/ww)* = 15.24 ft
Fill Slope *(perp. to road)* = 2.0
Wall angle *(perp. to road)* = 60
Fill slope *(perp. to wall)* = 2.31
Wingwall Panel Connected to Bridge Unit= ☑ Yes

Soil properties

γ_{soil} = 140 pcf
γ_{conc} = 150 pcf
$\gamma_{LLsurcharge}$ = 120 pcf
ϕ_{AB} = 32
θ_{AB} = 0
δ_{AB} = 24
ϕ_{BC} = 32
θ_{BC} = 30
δ_{BC} = 16

Foundation

D_{ftg} = 2.0 ft
B_{ftg} = 3.5 ft
o = 15 in
Q_n = 10.0 KSF
NONE

Railing or barrier

T/WW to load = 2.00 ft
impact load = 10.00 K

	Distance to anchor	Overriding perp. slope @ anchor	Wall height @ anchor	Contrib. width	Perp. slope used @ anchor	h_{eq} LL surch	Anchor Type	Check 'e' & Bearing
Anchor #1	3.00 ft	n	12.14 ft	5.00 ft	3.92 ft	2.00 ft	E	OK
Anchor #2	7.00 ft	n	12.97 ft	3.00 ft	5.70 ft	2.00 ft	E	OK
Anchor #3	0.00 ft	n	0.00 ft	0.00 ft	2.31 ft	2.00 ft	D	N/A
Anchor #4	0.00 ft	n	0.00 ft	0.00 ft	2.31 ft	2.00 ft	D	N/A
Anchor #5	0.00 ft	n	0.00 ft	0.00 ft	2.31 ft	2.00 ft	D	N/A

RESULTS SUMMARY				
Mesh (in back of wall)				
0.13	in^2/ft	(vertical/back)		
0.13	in^2/ft	(horizontal/face)		
Reinforcing @ anchor				Anchor Attachment
bar size	number	check bars	eck sh	check
7	4	OK	OK	OK
7	4	OK	OK	OK
-	-	N/A	N/A	OK
-	-	N/A	N/A	OK
-	-	N/A	N/A	OK
LL Surch @ Plates	☐			
add'l reinf in FF:	no add'l ff reinf.			

CALCULATION NOTES:

1. Wingwall calculations are done in accordance with the current edition of the *AASHTO LRFD Bridge Design Specifications*.
2. Moments are summed about the *toe (face) of the wingwall* (point "o" on attached "Pressure Diagram").
3. K_a is calculated using equation found in former AASHTO LRFD Specifications Equation 3.11.5.3-1

$$K_a = \frac{\sin^2(\phi+\theta)}{\sin^2\theta\sin(\theta-\delta)\left[1+\sqrt{\frac{\sin(\phi+\delta)\sin(\phi-\beta)}{\sin(\theta-\delta)\sin(\theta+\beta)}}\right]^2}$$

4. Only 80% of the soil unit weight is used for the eccentricity/ stability calculation. This is a conservative assumption as explained in the full HITEC report "Evaluation of the CON/SPAN® Wingwall System"
5. The full 100% of the soil unit weight is used for the bearing calculations.
6. These calculations conservatively assume that the wall anchor has the same unit weight as soil.
7. The wingwall angle (in plan view) is measured from perpendicular to roadway.
8. Barrier loads are distributed per AASHTO LRFD Specifications Section 13

Anchor 1			
SOIL PROPERTY	**DESCRIPTION**	**VALUE section AB**	**VALUE section BC**
ϕ	friction angle of soil	32	32
θ	angle of wall to the y-axis	0	30
δ	wall-soil friction angle *(measured from a perpendicular with the wall)* =0, if significant vibrations of backfill or modules settling more than backfill. = 0.5*ϕ, if modules are uniform width. = 0.75*ϕ, if averaged pressure surface	24	16
x	side slopes from road (x:1)	2.0	
α	wingwall angle (angle w/ perpendicular to road)	60	
	slope of backfill (perpendicular to wall)	3.92	
β	angle of backfill (perpendicular to wall)	14.3	14.3
	$(K_a)_{AB}$ =	0.33	$(K_a)_{BC}$ = 0.12

Anchor 1

VARIABLE	DESCRIPTION OF VARIABLE	VALUE	
H	wingwall design height at anchor location (feet)	12.14	
h_{surch}	height of live load surcharge (feet)	2.00	
t	thickness of wingwall (inches)	12	
δ	wall friction angle for section AB	24	
β	angle of backfill (degrees)	14.3	
L	length of anchor (feet)	7.04	E
γ_s	unit weight of backfill (kcf)	140	
γ_c	unit weight of concrete (kcf)	150	
γ_{surch}	unit weight of surcharge (kcf)	120	*(per AASHTO LRFD 3.11.6.4)*

Description	Vertical Reaction (k/ft)	Horizontal Reaction (k/ft)	Lever Arm (ft)	Disturbing Moment (ft-k/ft)	"Stability" Resisting Moment (ft-k/ft)	"Bearing" Resisting Moment (ft-k/ft)
wall (W_w)	1.82		0.50		0.91	0.91
soil I_A	0.89		5.69		4.03	5.04
soil I_B	8.52		4.52		30.79	38.49
soil II_A	2.08		3.13		5.21	6.51
soil II_B	0.68		6.02		3.29	4.11
$W_{surcharge(vert)}$	1.69		4.52		7.64	7.64
$W_{parapet}$	0.00		0.50		0.00	0.00
Soil Pressure						
$(P_{AB})_v$	1.04		8.04		8.35	8.35
$(P_{AB})_h$		2.33	6.98	16.28		
$(P_{BC1})_v$	-0.20		6.89		-1.38	-1.38
$(P_{BC1})_h$		0.80	1.50	1.21		
$(P_{BC2})_v$	-0.04		6.50		-0.25	-0.25
$(P_{BC2})_h$		0.15	0.83	0.13		
$P_{surcharch(hor)}$		0.89	6.97	6.21		
TOTALS =	16.48	4.18		23.83	58.59	69.42

AASHTO LRFD C11.6.3.3 states: The specified criteria for the location of the resultant, coupled with investigation of the bearing pressure, replaces the investigation of the ratio of stabilizing moment to overturning moment. See Section III Soil Bearing Pressure.

Anchor 2			
SOIL PROPERTY	**DESCRIPTION**	**VALUE section AB**	**VALUE section BC**
ϕ	friction angle of soil	32	32
θ	angle of wall to the y-axis	0	30
δ	wall-soil friction angle *(measured from a perpendicular with the wall)* =0, if significant vibrations of backfill or mod settling more than backfill. = 0.5*ϕ, if modules are uniform width. = 0.75*ϕ, if averaged pressure surface	24	16
x	side slopes from road (x:1)	2.0	
α	wingwall angle (angle w/ perpendicular to road)	60	
	slope of backfill (perpendicular to wall)	5.70	
β	angle of backfill (perpendicular to wall)	9.9	14.3
	$(K_a)_{AB}$ =	0.31	$(K_a)_{BC}$ = 0.12

Anchor 2

VARIABLE	DESCRIPTION OF VARIABLE	VALUE	
H	wingwall design height at anchor location (feet)	12.97	
h_{surch}	height of live load surcharge (feet)	2.00	
t	thickness of wingwall (inches)	12	
δ	wall friction angle for section AB	24	
β	angle of backfill (degrees)	9.9	
L	length of anchor (feet)	7.04	E
γ_s	unit weight of backfill (kcf)	140	
γ_c	unit weight of concrete (kcf)	150	
γ_{surch}	unit weight of surcharge (kcf)	120	*(per AASHTO LRFD 3.11.6.4)*

Description	Vertical Reaction (k/ft)	Horizontal Reaction (k/ft)	Lever Arm (ft)	Disturbing Moment (ft-k/ft)	"Stability" Resisting Moment (ft-k/ft)	"Bearing" Resisting Moment (ft-k/ft)
wall (W_w)	1.95		0.50		0.97	0.97
soil I_A	0.61		5.69		2.77	3.46
soil I_B	9.33		4.52		33.74	42.17
soil II_A	2.08		3.13		5.21	6.51
soil II_B	0.68		6.02		3.29	4.11
$W_{surcharge}$	1.69		4.52		7.64	7.64
$W_{parapet}$	0.00		0.50		0.00	0.00
Soil Pressure						
$(P_{AB})_v$	1.02		8.04		8.18	8.18
$(P_{AB})_h$		2.29	7.07	16.15		
$(P_{BC1})_v$	-0.19		6.88		-1.34	-1.34
$(P_{BC1})_h$		0.78	1.50	1.17		
$(P_{BC2})_v$	-0.04		6.88		-0.25	-0.25
$(P_{BC2})_h$		0.15	0.83	0.12		
P_{surch}		0.89	7.10	6.30		
TOTALS =	17.13	4.10		23.75	60.21	71.46

AASHTO LRFD C11.6.3.3 states: The specified criteria for the location of the resultant, coupled with investigation of the bearing pressure, replaces the investigation of the ratio of stabilizing moment to overturning moment. See Section III Soil Bearing Pressure.

II. CHECK OVERTURNING STABILITY AT CONNECTION PLATES

The connection plates provide stability for the portion of the wall not supported by the anchors, i.e., the section closest to the culvert. (See wingwall sketch)

Data:

number of plates = 2

ϕ = 32

δ = 24

γ_s = 0.140 kcf

$\gamma_{(surcharge)}$ = 0.120 kcf

wall height @ plates (H) = **13.38 ft**

Live load surcharge (h) = **2.00 ft**

section width for plates (S) = 1.0 ft

y_{Psh} = H/3 = 4.5 ft

y_{PLL} = H/2 = 6.7 ft

y_{p1} = **3.50 ft**

y_{p2} = **8.50 ft**

A_{bolt} = 0.79

t_{plate} = 1.00 in

$\phi F_{(bolt)}$ = 30 ksi

$F_{y(plate)}$ = 36 ksi

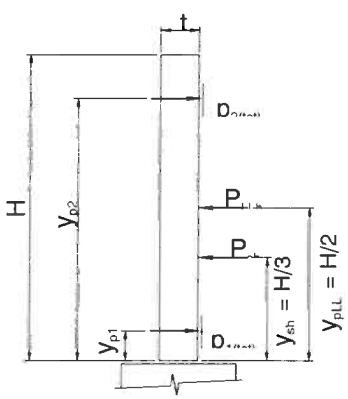

Find soil pressure on section:

Because the wall is more rigid at the plates, at-rest soil pressure coefficient (K_o) is used.

K_o = 1-sin ϕ = 0.47 *(AASHTO LRFD eq. 3.11.5.2-1)*

$P_{sh} = (^1/_2)\gamma_s K_o H^2(S)(\cos\delta)$ = 5.38 K

$P_{LLh} = K_o\gamma_s HhS(\cos\delta)$ = 1.38 K

$P_{impact} = P_{imp}S/L_{distr}$ = 0

Find reaction at plate:

Sum moments about bottom plate, p ,

$\Sigma M_{p1} = 0 = P_{sh}(y_{Psh} - y_{p1}) - p_2(y_{p2} - y_{p1})$ *(dead load)*

$\Sigma M_{p1} = 0 = P_{LL}(y_{PLL} - y_{p1}) - p_{2LL}(y_{p2} - y_{p1}) + P_{imp}(y_{imp} - y_{p1})$ *(live load)*

$p_2 = \dfrac{P_{sh}(y_{Psh} - y_{p1})}{(y_{p2} - y_{p1})}$ = 1.03 K $\qquad p_1 = P_{sh} - p_2$ = 4.35 K

$p_{2LL} = \dfrac{P_{LLh}(y_{pLL} - y_{p1}) + P_{imp}(y_{imp} - y_{p1})}{(y_{p2} - y_{p1})}$ = 0.88 K $\qquad p_{1LL} = P_{LL} + P_{imp} - p_{2LL}$ = 0.50 K

Find factored reaction:

Load factors are per AASHTO LRFD 3.4.1-1 & Table 3.4.1-2

$p_{fac} = \gamma p_{max(DL)} + (1.75)p_{max(LL)}$

$p_{fac} = (1.35)p_{(DL)} + (1.75)p_{(LL)}$

$p_{1(tot,\ factored)}$ = 6.74 K ***Controls***

$p_{2(tot,\ factored)}$ = 2.93 K

$p_{(max,\ factored)}$ = 6.74 K

Check bolts:

The special Richmond Screw Anchor *"wingwall insert" pullout capacity was obtained from the manufacturer and has approx. 3:1 safety factor.*

Pullout capacity = 16.5 k/bolt ***Controls***

Bolt tension = $\phi F A_{bolt}$ = 23.7 k/bolt

F.S. = $\dfrac{\text{Capacity* 2 bolts}}{(p_{fac})}$ = 4.89 *> 1.0, OK*

Check bending of plate:

Sum moments about corner of plate, point "o"

$\Sigma M_o = (p_{fac})(4.75")$ = 32033 lb-in

$I_{pl} = bh^3/12$ = 0.83 in^4

$\sigma_{max} = \dfrac{My}{I_{pl}}$ = 19 ksi $< \phi F_y = 0.9F_y$ *OK*

(AISC LRFD-F2 states ϕ_b = 0.9)

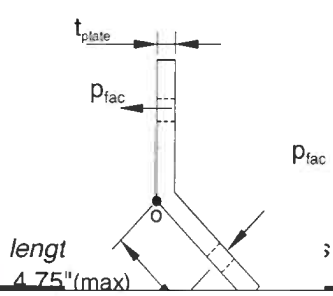

III. CHECK SOIL BEARING PRESSURE AND SLIDING UNDER CAST-IN-PLACE FOOTING

The reaction will be supported on the horizontal portion of the anchor plus the footing.

R_v = Total vertical reaction at anchor (using 100% of soil weight).
R_h = Total horizontal reaction at anchor.
M_D = Disturbing moment at anchor.
M_{Rb} = Resisting moment due to 100% of soil at anchor.

Summary of loads at anchors

anchor	anchor base length	R_v ($^K/_F$)	R_h ($^K/_F$)	M_D ($^{K\text{-}F}/_F$)	M_{Rb} ($^{K\text{-}F}/_F$)
1	4.73	16.48	4.18	23.83	69.42
2	4.73	17.13	4.10	23.75	71.46
3	3.73	0.00	0.00	0.00	0.00
4	3.73	0.00	0.00	0.00	0.00
5	3.73	0.00	0.00	0.00	0.00

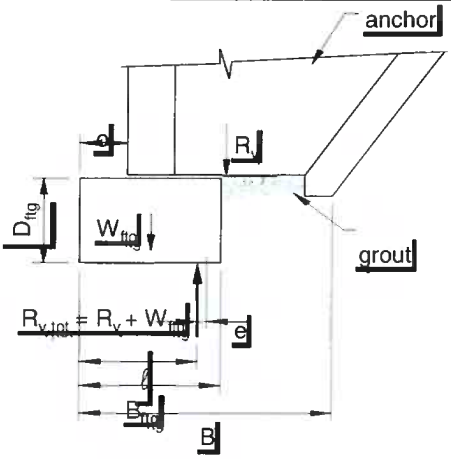

Check the bearing pressure under the wall

D_{ftg} = 2.0 ft
B_{ftg} = 3.5 ft
o = 15 in
W_{ftg} = 1.05 klf
Q_n = 10.0 KSF

Load Factors

γ_{EV} = 1.35
γ_{DC} = 1.25
γ_{LS} = 1.75

Resistance Factors

ϕ_B = 0.45

Q_b = Factored bearing resistance

B = bearing width
= maximum of (anchor base length + o) or B_{ftg}

ℓ = location of vertical resultant ($R_{v,tot}$) along bearing width

$$= \frac{R_v((M_{Rb}-M_D)/R_v + o) + W_{ftg}(B/2)}{R_{v,tot}}$$

e = eccentricity of resultant
= B/2 - ℓ

B' = adjusted bearing width
= B - 2e

q = factored bearing pressure *(must be less than Q_b)*
= $R_{v,tot}$ / B'

Check bearing pressure at each anchor

anchor	B (ft)	ℓ (ft)	e	check e	B' (ft)	q	Q_b	check q
1	6.98	3.88	-0.39	OK	6.20	3.88	4.50	OK
2	6.98	3.90	-0.41	OK	6.15	3.62	4.50	OK
3	0.00	0.00	0.00	*n/a*	0.00	0.00	4.50	*n/a*
4	0.00	0.00	0.00	*n/a*	0.00	0.00	4.50	*n/a*
5	0.00	0.00	0.00	*n/a*	0.00	0.00	4.50	*n/a*

Check the sliding factor of safety

$R_R = \phi * R_{V,tot} * .8 * \tan \phi$ *(AASHTO LRFD 10.6.3.4)*

(must be $> R_h$)

$\phi =$ 0.9 *from AASHTO LRFD Table 10.5.5.2.2-1 for precast concrete on sand*

Check sliding at each anchor

anchor	$R_{v,tot}$ (k/f)	R_R (k/f)	R_h	check $R_R > R_h$
1	17.53	7.89	4.18	*OK*
2	18.18	8.18	4.10	*OK*
3	0.00	0.00	0.02	*n/a*
4	0.00	0.00	0.02	*n/a*
5	0.00	0.00	0.02	*n/a*

IV. CHECK BENDING OF FOOTING CROSS SECTION

Bending need not be considered in footings when the footing depth, D, exceeds the projection, pr, of the footing beyond the edge of the wall.

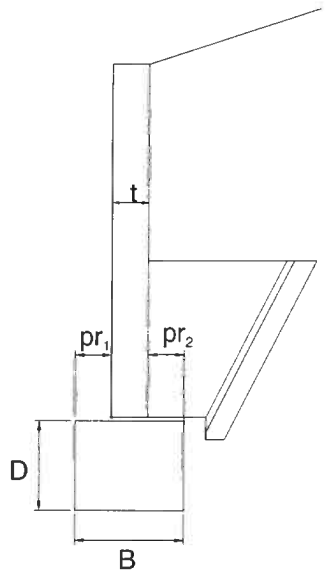

pr_1 = offset(o) = 15 in

pr_2 = B - o - t = 15 in **Controls**

pr_{max} = 15 in

projection < D *OK*

Use minimal steel stirrups
#4 @ 48 inches o.c.

V. CHECK WALL SECTION - BENDING AND SHEAR (vertical bars)

Assumptions: 1. *Wall stem is cantilevered from anchor.*
2. *Use active earth pressure because wall can deflect at top.*
3. *Use K_a and δ from Anchor Stability Calculations.*

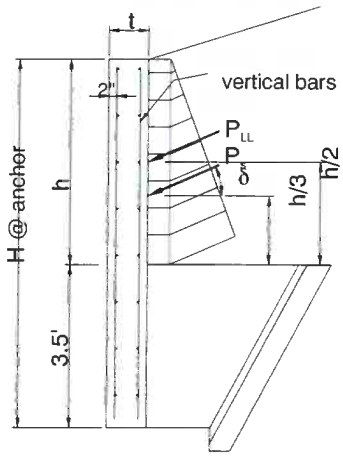

Horizontal loads:

$P_{sh} = (^1/_2)\gamma_s K_a h^2(\cos\delta)$

$P_{LLh} = \gamma_s K_a h(h_{surcharge})(\cos\delta)$

$P_{impact} = P_{imp}/L_{distr}$

Factored forces:

Load factors are per AASHTO LRFD 3.4.1-1 & Table 3.4.1-2

M_u = Section width$[(1.35)P_{sh}(h/3) + (1.75)P_{LLh}(h/2) + (1.75)P_{imp}(h+y_{imp})]$

V_u = Section width$[(1.35)P_{sh} + (1.75P_{LLh} + (1.75P_{imp}]$

Summary of forces at anchors

anchor	H (ft)	h (ft)	$h_{surcharge}$ (ft)	P_{sh} (k/ft)	P_{LLh} (k/ft)	P_{imp} (k/ft)	M_u (k-ft)	V_u (k)
1	12.14	8.64	2.00	1.60	0.63	0.00	55.05	16.34
2	12.97	9.47	2.00	1.79	0.65	0.00	38.96	10.65
3	0.00	0.00	2.00	0.00	0.00	0.00	0.00	0.00
4	0.00	0.00	2.00	0.00	0.00	0.00	0.00	0.00
5	0.00	0.00	2.00	0.00	0.00	0.00	0.00	0.00

Check bending (reinforcment) at anchors

f'_c = **5000 psi**

f_y = **60000 psi**

ϕ_b = **0.9** *(AASHTO LRFD 5.4.2.1)*

$m = f_y/0.85f'_c$ = 14.12

d = 9.56 in

b = anchor's contrib. width

$$R_u = \frac{M_u}{\phi_b b d^2}$$

$$\rho_{reqd} = \frac{1}{m}\left(1 - \sqrt{1 - \frac{2mR_u}{f_y}}\right)$$

ρ_{min} = *AASHTO LRFD 5.7.3.3.2 states the minimum reinforcement is the lesser of 1.2Mcr OR 1.33 times the factored moment required by strength.*

anchor	R_u (psi)	ρ_{reqd}	ρ_{cr}	ρ_{min}	$A_{s\ min}$ (in^2)	$A_{s\ actual}$ (in^2)	check
1	134	0.0023	0.0032	0.0029	1.69	3.06	*OK*
2	158	0.0027	0.0032	0.0032	1.09	2.80	*OK*
3	0	0.0000	0.0032	0.0000	0.00	#VALUE!	*N/A*
4	0	0.0000	0.0032	0.0000	0.00	#VALUE!	*N/A*
5	0	0.0000	0.0032	0.0000	0.00	#VALUE!	*N/A*

Check shear

$V_c = (.0316)*\beta \sqrt{f'_c}\, b_v d_v$ *(V_c calculated by AASHTO LRFD eq'n 5.8.3.3-3)*

$\phi = 0.9$ *(AASHTO LRFD 5.5.4.2.1)*

$\beta = 2$ *(AASHTO LRFD 5.8.3.4.1)*

$d_v = .9*d$ or $.72*h$ *whichever is greater (AASHTO LRFD 5.8.2.9)*

anchor	ϕV_c	check $V_u < \phi V_c$
1	65.93	*OK*
2	39.56	*OK*
3	0.00	*N/A*
4	0.00	*N/A*
5	0.00	*N/A*

VI. CHECK TYPE 'E' ANCHOR ATTACHMENT

Check capacity of connector for pullout (truncated pyramid failure), shear, tension, and combined shear & tension

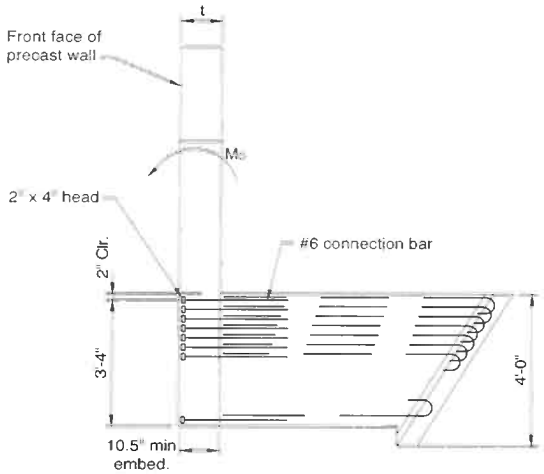

embedment depth (l_e) = **10.5 in**

Attachment depth = 42 in
X head dimension (Xd_{head}) = 3 in
Y head dimension (Yd_{head}) = 3 in
Bar size = **# 6**
rows = **7**
row spacing = **3 in**
wall thickness (t) = 12 in
x = Xd_{head} (*since only 1 column*) = 3 in
y = (#rows-1)(row spacing) + Yd_{head} = 21 in
z = min(x,y) = 3 in
h_{min} = (z + l_e)/2 = 12.0 in
A_R = (x+2l_e-2t)(y+2l_e-2t) = 0.0 in^2

f'_c = **5000 psi**
f_y = **60000 psi**
$\phi_{concrete}$ = 0.85
ϕ_{steel} = 0.90

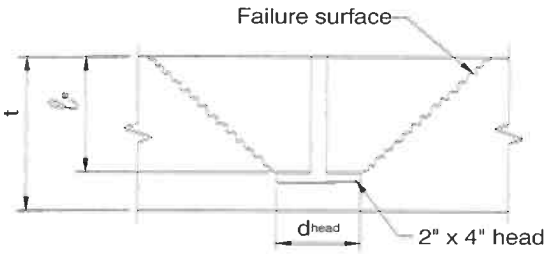

TENSION CAPACITY (Per PCI Design Handbook §6.5.2.1)

t > hmin: failure surface does not penetrate slab

Find pullout capacity of concrete

if t >= h_{min}, $\phi P_c = \phi 2.67 sqrt(f'c)(x+2l_e)(y+2l_e)$

if t < h_{min}, $\phi P_c = \phi 2.67 sqrt(f'c)[(x+2l_e)(y+2l_e) - A_R]$

ϕP_c = 161.76 K

Find tension capacity of studs

$\phi P_y = \phi f_y(A_{bar})(\#bars)$

ϕP_y = 167.00 K

controlling tension capacity (ϕP) = 161.76 K

Find moment capacity of anchor

Moment capacity of anchor (ϕM_n) = $\phi P(d-a/2)$

d = attachment depth - bar cover - $(y-Yd_{head})/2$ = 31 in

$a = A_s f_y/0.85 f'_c b$ = 7.28 in

ϕM_n = 368.84 k-f

SHEAR CAPACITY (Per PCI Design Handbook §6.5.2.2)

Find shear capacity of concrete

$\phi V_c = \phi V'_c C_w C_t C_c$

$\phi V'_c = \phi 12.5 d_e^{1.5} \text{sqrt}(f'_c)$	= 187.4 K
$C_w = 1 + \text{spacing}/3.5d_e < \#\text{columns}$	= 1.0
$C_t = t/1.3d_e <= 1.0$	= 0.23
$C_c = 0.4 + 0.7d_c/de <= 1.0$	= 1.0
d_e = attachment depth - cover - bar dia/2	= 40 in
d_c = distance to side of wingwall	= 36 in

$\phi V_c = \phi V'_c C_w C_t C_c =$ 43.66 K

Find shear capacity of studs

$\phi V_y = \phi 0.9 f_y A_{bar}(\#\text{bars})$

$\phi V_y =$ 150.30 K

controlling shear capacity (ϕV) = 43.66 K

FIND LOADS

Unfactored loads on anchors:

$M_{D(DL)}$ = (sec width)$M_{D(anchor)}$

$M_{D(LL)}$ = (sec width)($M_{D(anchor)}$ + P_{imp}*(wall ht + y_{imp}))

Factored loads:

Load factors are per AASHTO 3.22.1 & Table 3.22.1A

$M_u = (1.3)(1.3)M_{D(DL)} + (1.3)(1.67)M_{D(LL)}$

$P_u = M_u$ /(d-a/2)*cos(bar angle)

$V_u = M_u$ /(d-a/2)*sin(bar angle)

bar angle = 0°

Summary of forces

anchor	$M_{D(DL)}$ ft-k	$M_{D(LL)}$ ft-k	M_u ft-k	P_u k	V_u k
1	88.1	31.1	216.3	94.9	0.0
2	52.3	18.9	129.5	56.8	0.0
3	0.0	0.0	0.0	0.0	0.0
4	0.0	0.0	0.0	0.0	0.0
5	0.0	0.0	0.0	0.0	0.0

Summary of results

anchor	check $\phi M_n > M_u$	check $\phi P > P_u$	check $\phi V > V_u$	check combined V_c & P_c	check combined V_s & P_s
1	OK	OK	OK	OK	OK
2	OK	OK	OK	OK	OK
3	n/a	n/a	n/a	n/a	n/a
4	n/a	n/a	n/a	n/a	n/a
5	n/a	n/a	n/a	n/a	n/a

Section 11
CSI LRFD Wing Wall 4 Calculations

Concrete Systems Inc.
9 Commercial St., Hudson, NH,03051
Phone 603-889-4163
Fax 603-889-2417

AASHTO LRFD WINGWALL CALCULATIONS

PROJECT NUMBER: VT/AOT BRIDGE REPLACEMENT RICHFORD, VT. Wingwall 4
PROJECT NAME:
DATE: May 19, 2015
BY:

INPUT PARAMETERS:

Wall geometry

Panel Height (high) = 14.86 ft
Panel Height (low) = 14.61 ft
Wall Panel Length = 11.00 ft
Entire Wall length = 11.00 ft
Length of flat = 0.00 ft
wall thickness = 12
Wingwall Drop *(high-low)* = 0.25 ft
Wall slope = 0.0227
Max fill ht. *(t/road to b/ww)* = 14.66 ft
Fill Slope *(perp. to road)* = 2.0
Wall angle *(perp. to road)* = 0
Fill slope *(perp. to wall)* = 0.00
Wingwall Panel Connected to Bridge Unit= ☑ Yes

Soil properties

γ_{soil} = 140 pcf
γ_{conc} = 150 pcf
$\gamma_{LLsurcharge}$ = 120 pcf
ϕ_{AB} = 32
θ_{AB} = 0
δ_{AB} = 24
ϕ_{BC} = 32
θ_{BC} = 30
δ_{BC} = 16

Foundation

D_{ftg} = 2.0 ft
B_{ftg} = 3.5 ft
o = 15 in
Q_n = 10.0 KSF
NONE

Railing or barrier

T/WW to load = 2.00 ft
impact load = 10.00 K

	Distance to anchor	Overriding perp. slope @ anchor	Wall height @ anchor	Contrib. width	Perp. slope used @ anchor	h_{eq} LL surch	Anchor Type	Check 'e' & Bearing
Anchor #1	3.00 ft	n	14.68 ft	5.50 ft	0.00 ft	2.00 ft	E	OK
Anchor #2	8.00 ft	n	14.79 ft	4.00 ft	0.00 ft	2.00 ft	E	OK
Anchor #3	0.00 ft	n	0.00 ft	0.00 ft	0.00 ft	2.00 ft	D	N/A
Anchor #4	0.00 ft	n	0.00 ft	0.00 ft	0.00 ft	2.00 ft	D	N/A
Anchor #5	0.00 ft	n	0.00 ft	0.00 ft	0.00 ft	2.00 ft	D	N/A

RESULTS SUMMARY				
Mesh (in back of wall)				
0.13	in²/ft	(vertical/back)		
0.13	in²/ft	(horizontal/face)		
Reinforcing @ anchor				Anchor Attachment
bar size	number	check bars	eck sh	check
7	6	OK	OK	OK
7	6	OK	OK	OK
-	-	N/A	N/A	OK
-	-	N/A	N/A	OK
-	-	N/A	N/A	OK
LL Surch @ Plates	☐			
add'l reinf in FF:	no add'l ff reinf.			

CALCULATION NOTES:

1. Wingwall calculations are done in accordance with the current edition of the *AASHTO LRFD Bridge Design Specifications* .
2. Moments are summed about the *toe (face) of the wingwall* (point "o" on attached "Pressure Diagram").
3. K_a is calculated using equation found in former AASHTO LRFD Specifications Equation 3.11.5.3-1

$$K_a = \frac{\sin^2(\phi + \theta)}{\sin^2\theta \sin(\theta - \delta)\left[1 + \sqrt{\frac{\sin(\phi + \delta)\sin(\phi - \beta)}{\sin(\theta - \delta)\sin(\theta + \beta)}}\right]^2}$$

4. Only 80% of the soil unit weight is used for the eccentricity/ stability calculation. This is a conservative assumption as explained in the full HITEC report "Evaluation of the CON/SPAN® Wingwall System"
5. The full 100% of the soil unit weight is used for the bearing calculations.
6. These calculations conservatively assume that the wall anchor has the same unit weight as soil.
7. The wingwall angle (in plan view) is measured from perpendicular to roadway.
8. Barrier loads are distributed per AASHTO LRFD Specifications Section 13

Anchor 1			
SOIL PROPERTY	DESCRIPTION	VALUE section AB	VALUE section BC
ϕ	friction angle of soil	32	32
θ	angle of wall to the y-axis	0	30
δ	wall-soil friction angle *(measured from a perpendicular with the wall)* =0, if significant vibrations of backfill or modules settling more than backfill. = 0.5*ϕ, if modules are uniform width. = 0.75*ϕ, if averaged pressure surface	24	16
x	side slopes from road (x:1)	2.0	
α	wingwall angle (angle w/ perpendicular to road)	0	
	slope of backfill (perpendicular to wall)	0.00	
β	angle of backfill (perpendicular to wall)	0.0	0.0
	$(K_a)_{AB}$ =	0.27	$(K_a)_{BC}$ = 0.11

Anchor 1

VARIABLE	DESCRIPTION OF VARIABLE	VALUE	
H	wingwall design height at anchor location (feet)	14.68	
h_{surch}	height of live load surcharge (feet)	2.00	
t	thickness of wingwall (inches)	12	
δ	wall friction angle for section AB	24	
β	angle of backfill (degrees)	0.0	
L	length of anchor (feet)	7.04	E
γ_s	unit weight of backfill (kcf)	140	
γ_c	unit weight of concrete (kcf)	150	
γ_{surch}	unit weight of surcharge (kcf)	120	*(per AASHTO LRFD 3.11.6.4)*

Description	Vertical Reaction (k/ft)	Horizontal Reaction (k/ft)	Lever Arm (ft)	Disturbing Moment (ft-k/ft)	"Stability" Resisting Moment (ft-k/ft)	"Bearing" Resisting Moment (ft-k/ft)
wall (W_w)	2.20		0.50		1.10	1.10
soil I_A	0.00		5.69		0.00	0.00
soil I_B	11.02		4.52		39.84	49.80
soil II_A	2.08		3.13		5.21	6.51
soil II_B	0.68		6.02		3.29	4.11
$W_{surcharge(vert)}$	1.69		4.52		7.64	7.64
$W_{parapet}$	0.00		0.50		0.00	0.00
Soil Pressure						
$(P_{AB})_v$	0.98		8.04		7.85	7.85
$(P_{AB})_h$		2.19	7.23	15.85		
$(P_{BC1})_v$	-0.19		6.89		-1.29	-1.29
$(P_{BC1})_h$		0.75	1.50	1.12		
$(P_{BC2})_v$	-0.03		6.50		-0.22	-0.22
$(P_{BC2})_h$		0.13	0.83	0.11		
$P_{surcharch(hor)}$		0.88	7.34	6.48		
TOTALS =	18.43	3.96		23.57	63.42	75.51

AASHTO LRFD C11.6.3.3 states: The specified criteria for the location of the resultant, coupled with investigation of the bearing pressure, replaces the investigation of the ratio of stabilizing moment to overturning moment. See Section III Soil Bearing Pressure.

Anchor 2			
SOIL PROPERTY	DESCRIPTION	VALUE section AB	VALUE section BC
ϕ	friction angle of soil	32	32
θ	angle of wall to the y-axis	0	30
δ	wall-soil friction angle *(measured from a perpendicular with the wall)*	24	16
	=0, if significant vibrations of backfill or mod settling more than backfill.		
	= 0.5*ϕ, if modules are uniform width.		
	= 0.75*ϕ, if averaged pressure surface		
x	side slopes from road (x:1)	2.0	
α	wingwall angle (angle w/ perpendicular to road)	0	
	slope of backfill (perpendicular to wall)	0.00	
β	angle of backfill (perpendicular to wall)	0.0	0.0
	$(K_a)_{AB}$ =	0.27	$(K_a)_{BC}$ = 0.11

Anchor 2

VARIABLE	DESCRIPTION OF VARIABLE	VALUE	
H	wingwall design height at anchor location (feet)	14.79	
h_{surch}	height of live load surcharge (feet)	2.00	
t	thickness of wingwall (inches)	12	
δ	wall friction angle for section AB	24	
β	angle of backfill (degrees)	0.0	
L	length of anchor (feet)	7.04	E
γ_s	unit weight of backfill (kcf)	140	
γ_c	unit weight of concrete (kcf)	150	
γ_{surch}	unit weight of surcharge (kcf)	120	*(per AASHTO LRFD 3.11.6.4)*

Description	Vertical Reaction (k/ft)	Horizontal Reaction (k/ft)	Lever Arm (ft)	Disturbing Moment (ft-k/ft)	"Stability" Resisting Moment (ft-k/ft)	"Bearing" Resisting Moment (ft-k/ft)
wall (W_w)	2.22		0.50		1.11	1.11
soil I_A	0.00		5.69		0.00	0.00
soil I_B	11.13		4.52		40.24	50.30
soil II_A	2.08		3.13		5.21	6.51
soil II_B	0.68		6.02		3.29	4.11
$W_{surcharge}$	1.69		4.52		7.64	7.64
$W_{parapet}$	0.00		0.50		0.00	0.00
Soil Pressure						
$(P_{AB})_v$	1.00		8.04		8.01	8.01
$(P_{AB})_h$		2.24	7.26	16.26		
$(P_{BC1})_v$	-0.19		6.88		-1.30	-1.30
$(P_{BC1})_h$		0.76	1.50	1.13		
$(P_{BC2})_v$	-0.03		6.88		-0.23	-0.23
$(P_{BC2})_h$		0.13	0.83	0.11		
P_{surch}		0.89	7.40	6.58		
TOTALS =	18.58	4.02		24.09	63.97	76.16

AASHTO LRFD C11.6.3.3 states: The specified criteria for the location of the resultant, coupled with investigation of the bearing pressure, replaces the investigation of the ratio of stabilizing moment to overturning moment. See Section III Soil Bearing Pressure.

II. CHECK OVERTURNING STABILITY AT CONNECTION PLATES

The connection plates provide stability for the portion of the wall not supported by the anchors, i.e., the section closest to the culvert. (See wingwall sketch)

Data:

number of plates = 2

ϕ = 32

δ = 24

γ_s = 0.140 kcf

$\gamma_{(surcharge)}$ = 0.120 kcf

wall height @ plates (H) = **14.86 ft**

Live load surcharge (h) = **2.00 ft**

section width for plates (S) = 1.5 ft

y_{Psh} = H/3 = 5.0 ft

y_{PLL} = H/2 = 7.4 ft

y_{p1} = **3.50 ft**

y_{p2} = **8.50 ft**

A_{bolt} = 0.79

t_{plate} = 1.00 in

$\phi F_{(bolt)}$ = 30 ksi

$F_{y(plate)}$ = 36 ksi

Find soil pressure on section:

Because the wall is more rigid at the plates, at-rest soil pressure coefficient (K_o) is used.

$K_o = 1\text{-}\sin\phi = 0.47$ *(AASHTO LRFD eq. 3.11.5.2-1)*

$P_{sh} = (^1/_2)\gamma_s K_o H^2(S)(\cos\delta) = 9.96$ K

$P_{LLh} = K_c\gamma_s HhS(\cos\delta) = 2.30$ K

$P_{impact} = P_{imp}S/L_{distr} = 0$

Find reaction at plate:

Sum moments about bottom plate, p_1

$\Sigma M_{p1} = 0 = P_{sh}(y_{Psh} - y_{p1}) - p_2(y_{p2} - y_{p1})$ *(dead load)*

$\Sigma M_{p1} = 0 = P_{LL}(y_{PLL} - y_{p1}) - p_{2LL}(y_{p2} - y_{p1}) + P_{imp}(y_{imp} - y_{p1})$ *(live load)*

$p_2 = \dfrac{P_{sh}(y_{Psh} - y_{p1})}{(y_{p2} - y_{p1})} = 2.89$ K $\qquad p_1 = P_{sh} - p_2 = 7.06$ K

$p_{2LL} = \dfrac{P_{LLh}(y_{pLL} - y_{p1}) + P_{imp}(y_{imp} - y_{p1})}{(y_{p2} - y_{p1})} = 1.81$ K $\qquad p_{1LL} = P_{LL} + P_{imp} - p_{2LL} = 0.49$ K

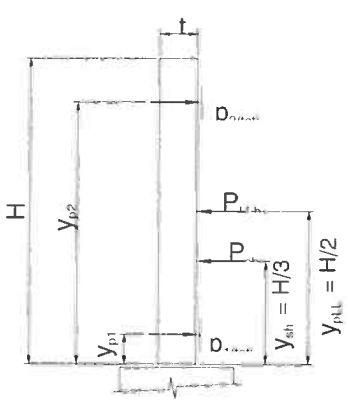

Find factored reaction:

Load factors are per AASHTO LRFD 3.4.1-1 & Table 3.4.1-2

$p_{fac} = \gamma p_{max(DL)} + (1.75)p_{max(LL)}$

$p_{fac} = (1.35)p_{(DL)} + (1.75)p_{(LL)}$

$p_{1(tot,\ factored)} = 10.40$ K ***Controls***

$p_{2(tot,\ factored)} = 7.07$ K

$p_{(max,\ factored)} = 10.40$ K

Check bolts:

The special Richmond Screw Anchor *"wingwall insert" pullout capacity was obtained from the manufacturer and has approx. 3:1 safety factor.*

Pullout capacity = 16.5 k/bolt ***Controls***

Bolt tension = $\phi F A_{bolt}$ = 23.7 k/bolt

$F.S. = \dfrac{\text{Capacity* 2 bolts}}{(p_{fac})} = 3.17$ *> 1.0, OK*

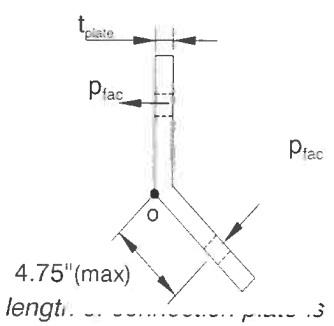

length of connection plate is 10"

Check bending of plate:

Sum moments about corner of plate, point "o"

$\Sigma M_o = (p_{fac})(4.75") = 49377$ lb-in

$I_{pl} = bh^3/12 = 0.83$ in^4

$\sigma_{max} = \dfrac{My}{I_{pl}} = 30$ ksi $< \phi F_y = 0.9F_y$ *OK*

(AISC LRFD-F2 states $\phi_b = 0.9$)

III. CHECK SOIL BEARING PRESSURE AND SLIDING UNDER CAST-IN-PLACE FOOTING

The reaction will be supported on the horizontal portion of the anchor plus the footing.

R_v = Total vertical reaction at anchor (using 100% of soil weight).

R_h = Total horizontal reaction at anchor.

M_D = Disturbing moment at anchor.

M_{Rb} = Resisting moment due to 100% of soil at anchor.

Summary of loads at anchors

anchor	anchor base length	R_v ($^K/_F$)	R_h ($^K/_F$)	M_D ($^{K\text{-}F}/_F$)	M_{Rb} ($^{K\text{-}F}/_F$)
1	4.73	18.43	3.96	23.57	75.51
2	4.73	18.58	4.02	24.09	76.16
3	3.73	0.00	0.00	0.00	0.00
4	3.73	0.00	0.00	0.00	0.00
5	3.73	0.00	0.00	0.00	0.00

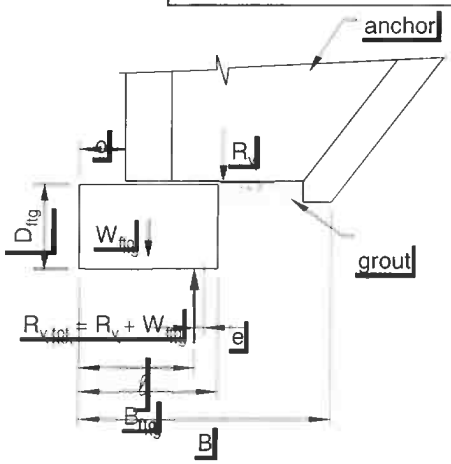

Check the bearing pressure under the wall

D_{ftg} = 2.0 ft

B_{ftg} = 3.5 ft

o = 15 in

W_{ftg} = 1.05 klf

Q_n = 10.0 KSF

Q_b = Factored bearing resistance

Load Factors

γ_{EV} = 1.35

γ_{DC} = 1.25

γ_{LS} = 1.75

Resistance Factors

ϕ_B = 0.45

B = bearing width

= maximum of (anchor base length + o) or B_{ftg}

$\bar{x}$ = location of vertical resultant ($R_{v,tot}$) along bearing width

$$= \frac{R_v((M_{Rb}-M_D)/R_v + o) + W_{ftg}(B/2)}{R_{v,tot}}$$

e = eccentricity of resultant

= B/2 - $\bar{x}$

B' = adjusted bearing width

= B - 2e

q = factored bearing pressure *(must be less than Q_b)*

= $R_{v,tot}$ / B'

Check bearing pressure at each anchor

anchor	B (ft)	$\bar{x}$ (ft)	e	check e	B' (ft)	q	Q_b	check q
1	6.98	3.94	-0.45	OK	6.07	4.39	4.50	OK
2	6.98	3.93	-0.44	OK	6.10	3.97	4.50	OK
3	0.00	0.00	0.00	*n/a*	0.00	0.00	4.50	*n/a*
4	0.00	0.00	0.00	*n/a*	0.00	0.00	4.50	*n/a*
5	0.00	0.00	0.00	*n/a*	0.00	0.00	4.50	*n/a*

Check the sliding factor of safety

$R_R = \phi * R_{V,tot} * .8 * \tan \phi$ *(AASHTO LRFD 10.6.3.4)*

(must be >R_h)

ϕ = 0.9 *from AASHTO LRFD Table 10.5.5.2.2-1 for precast concrete on sand*

Check sliding at each anchor

anchor	$R_{v,tot}$ (k/f)	R_R (k/f)	R_h	check $R_R > R_h$
1	19.48	8.77	3.96	OK
2	19.63	8.83	4.02	OK
3	0.00	0.00	0.02	*n/a*
4	0.00	0.00	0.02	*n/a*
5	0.00	0.00	0.02	*n/a*

IV. CHECK BENDING OF FOOTING CROSS SECTION

Bending need not be considered in footings when the footing depth, D, exceeds the projection, pr, of the footing beyond the edge of the wall.

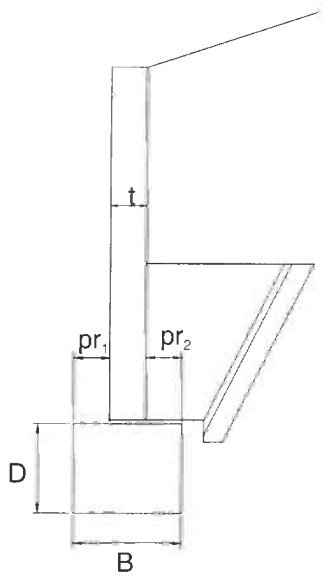

pr_1 = offset(o) = 15 in

pr_2 = B - o - t = 15 in **_Controls_**

pr_{max} = 15 in

projection < D OK

Use minimal steel stirrups
#4 @ 48 inches o.c.

V. CHECK WALL SECTION - BENDING AND SHEAR (vertical bars)

Assumptions: *1. Wall stem is cantilevered from anchor.*
2. Use active earth pressure because wall can deflect at top.
3. Use K_a and δ from Anchor Stability Calculations.

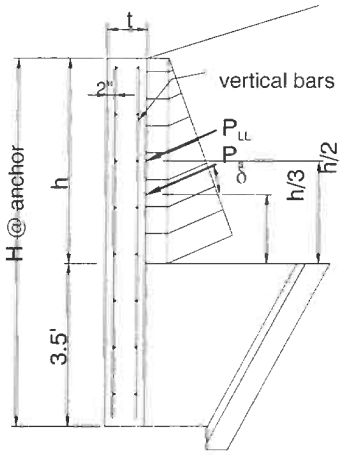

Horizontal loads:

$P_{sh} = (^1/_2)\gamma_s K_a h^2(\cos\delta)$

$P_{LLh} = \gamma_s K_a h(h_{surcharge})(\cos\delta)$

$P_{impact} = P_{imp}/L_{distr}$

Factored forces:

Load factors are per AASHTO LRFD 3.4.1-1 & Table 3.4.1-2

M_u = Section width$[(1.35)P_{sh}(h/3) + (1.75)P_{LLh}(h/2) + (1.75)P_{imp}(h+y_{imp})]$

V_u = Section width$[(1.35)P_{sh} + (1.75P_{LLh} + (1.75P_{imp}]$

Summary of forces at anchors

anchor	H (ft)	h (ft)	$h_{surcharge}$ (ft)	P_{sh} (k/ft)	P_{LLh} (k/ft)	P_{imp} (k/ft)	M_u (k-ft)	V_u (k)
1	14.68	11.18	2.00	2.19	0.67	0.00	96.88	22.76
2	14.79	11.29	2.00	2.24	0.68	0.00	72.35	16.84
3	0.00	0.00	2.00	0.00	0.00	0.00	0.00	0.00
4	0.00	0.00	2.00	0.00	0.00	0.00	0.00	0.00
5	0.00	0.00	2.00	0.00	0.00	0.00	0.00	0.00

Check bending (reinforcment) at anchors

f'_c = 5000 psi

f_y = 60000 psi

ϕ_b = 0.9 *(AASHTO LRFD 5.4.2.1)*

$m = f_y/0.85f'_c$ = 14.12

d = 9.56 in

b = anchor's contrib. width

$$R_u = \frac{M_u}{\phi_b b d^2}$$

$$\rho_{reqd} = \frac{1}{m}\left(1 - \sqrt{1 - \frac{2mR_u}{f_y}}\right)$$

ρ_{min} = *AASHTO LRFD 5.7.3.3.2 states the minimum reinforcement is the lesser of 1.2Mcr OR 1.33 times the factored moment required by strength.*

anchor	R_u (psi)	ρ_{reqd}	ρ_{cr}	ρ_{min}	$A_{s\,min}$ (in^2)	$A_{s\,actual}$ (in^2)	check
1	214	0.0037	0.0032	0.0037	2.31	4.32	OK
2	220	0.0038	0.0032	0.0038	1.73	4.13	OK
3	0	0.0000	0.0032	0.0000	0.00	#VALUE!	N/A
4	0	0.0000	0.0032	0.0000	0.00	#VALUE!	N/A
5	0	0.0000	0.0032	0.0000	0.00	#VALUE!	N/A

Check shear

$V_c = (.0316)*\beta \sqrt{f'_c}\, b_v d_v$ *(V_c calculated by AASHTO LRFD eq'n 5.8.3.3-3)*

$\phi = 0.9$ *(AASHTO LRFD 5.5.4.2.1)*

$\beta = 2$ *(AASHTO LRFD 5.8.3.4.1)*

$d_v = .9*d$ or $.72*h$ *whichever is greater (AASHTO LRFD 5.8.2.9)*

anchor	ϕV_c	check $V_u < \phi V_c$
1	72.53	OK
2	52.75	OK
3	0.00	N/A
4	0.00	N/A
5	0.00	N/A

VI. CHECK TYPE 'E' ANCHOR ATTACHMENT

Check capacity of connector for pullout (truncated pyramid failure), shear, tension, and combined shear & tension

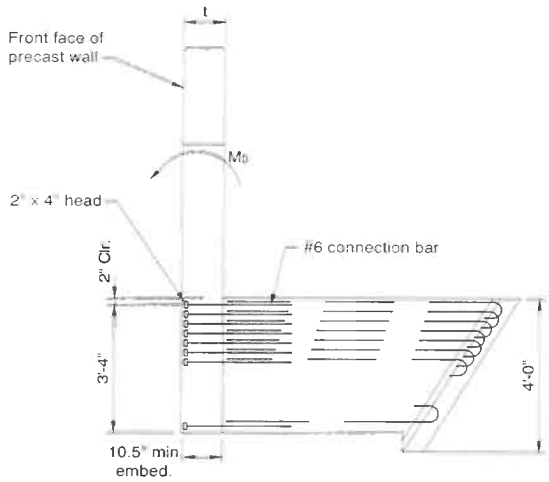

embedment depth (l'_e) = **10.5 in**

Attachment depth = 42 in
X head dimension (Xd_{head}) = 3 in
Y head dimension (Yd_{head}) = 3 in
Bar size = **# 6**
rows = **7**
row spacing = **3 in**
wall thickness (t) = 12 in
x = Xd_{head} (*since only 1 column*) = 3 in
y = (#rows-1)(row spacing) + Yd_{head} = 21 in
z = min(x,y) = 3 in
h_{min} = (l'_e + l'_e)/2 = 12.0 in
A_R = (x+2 e-2d)(y+2 e-2d) = 0.0 in^2

f'_c = **5000 psi**
f_y = **60000 psi**
$\phi_{concrete}$ = 0.85
ϕ_{steel} = 0.90

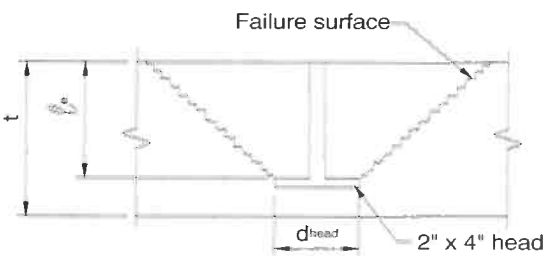

TENSION CAPACITY (Per PCI Design Handbook §6.5.2.1)

t > hmin: failure surface does not penetrate slab

Find pullout capacity of concrete

if t >= h_{min}, $\phi P_c = \phi 2.67 sqrt(f'c)(x+2\ e)(y+2\ e)$

if t < h_{min}, $\phi P_c = \phi 2.67 sqrt(f'c)[(x+2\ e)(y+2\ e) - A_R]$

ϕP_c = 161.76 K

Find tension capacity of studs

$\phi P_y = \phi f_y (A_{bar})$(#bars)

ϕP_y = 167.00 K

controlling tension capacity (ϕP) = 161.76 K

Find moment capacity of anchor

Moment capacity of anchor (ϕM_n) = $\phi P(d-a/2)$

d = attachment depth - bar cover - $(y-Yd_{head})/2$ = 31 in

a = $A_s f_y / 0.85 f'_c b$ = 7.28 in

ϕM_n = 368.84 k-f

SHEAR CAPACITY (Per PCI Design Handbook §6.5.2.2)

Find shear capacity of concrete

$\phi V_c = \phi V'_c C_w C_t C_c$

$\phi V'_c = \phi 12.5 d_e^{1.5} \text{sqrt}(f'_c)$	= 187.4 K
$C_w = 1 + \text{spacing}/3.5d_e < \#\text{columns}$	= 1.0
$C_t = t/1.3d_e <= 1.0$	= 0.23
$C_c = 0.4 + 0.7d_c/de <= 1.0$	= 1.0
d_e = attachment depth - cover - bar dia/2	= 40 in
d_c = distance to side of wingwall	= 36 in

$\phi V_c = \phi V'_c C_w C_t C_c =$ 43.66 K

Find shear capacity of studs

$\phi V_y = \phi 0.9 f_y A_{bar}(\#\text{bars})$

$\phi V_y =$ 150.30 K

controlling shear capacity (ϕV) = 43.66 K

FIND LOADS

Unfactored loads on anchors:

$M_{D(DL)}$ = (sec width)$M_{D(anchor)}$

$M_{D(LL)}$ = (sec width)($M_{D(anchor)}$ + P_{imp}*(wall ht + y_{imp}))

Factored loads:

Load factors are per AASHTO 3.22.1 & Table 3.22.1A

$M_u = (1.3)(1.3)M_{D(DL)} + (1.3)(1.67)M_{D(LL)}$

$P_u = M_u$ /(d-a/2)*cos(bar angle)

$V_u = M_u$ /(d-a/2)*sin(bar angle)

bar angle = 0°

Summary of forces

anchor	$M_{D(DL)}$ ft-k	$M_{D(LL)}$ ft-k	M_u ft-k	P_u k	V_u k
1	94.0	35.7	236.2	103.6	0.0
2	70.0	26.3	175.5	77.0	0.0
3	0.0	0.0	0.0	0.0	0.0
4	0.0	0.0	0.0	0.0	0.0
5	0.0	0.0	0.0	0.0	0.0

Summary of results

anchor	check $\phi M_n > M_u$	check $\phi P > P_u$	check $\phi V > V_u$	check combined V_c & P_c	check combined V_s & P_s
1	OK	OK	OK	OK	OK
2	OK	OK	OK	OK	OK
3	n/a	n/a	n/a	n/a	n/a
4	n/a	n/a	n/a	n/a	n/a
5	n/a	n/a	n/a	n/a	n/a