Transmittal of Drawings

DATE: June 26, 2015

CSI Job #	**C22312**	**Submittal No:** **Revision No:**	C22312 - Submittal-002217 - BC/CS-BOX CULVERT W/CS WW
Attn:	Mr. Jay Lafontaine (jlafontaine@gwtatro.com) Phone: (802) 644-8875; Fax: (802) 644-5020 Mr. Cody Marsh (cmarsh@gwtatro.com) Phone: (802) 644-8875; Fax: (802) 644-5020	**Owner:**	
Customer Name:	G W Tatro Construction Inc Jct Rtes 15 & 108, Jeffersonville, VT 05464	**Engineer:**	
Project:	VT/DOT Bridge Replacement - Roadway Improvements TH 3 FAS 0302 in RICHFORD, VT	**Project No /** **Contract No(s):** **Federal Aid No(s):**	BRF030229 /

Reason for submittal: For your files and distribution	
Enclosed herein please find submittal for:	**1 copy of shop drawings;1 copy of Layout drawing**
LO1A-B, C1-F5	
After your review:	***For approval return 1 copy for our files***

Standard Submittal Remarks: **The following is included: 1 copy of LO1A-B (Rev 4) LAYOUT C1-WW4 (Rev 4) , F1-F5 (Rev 1) F4 (Rev 2) SHOP**

Revision Remarks: **5/20/15 R1- Revised, moved WW4. added F3A,F3B, rev GA**
5/29/15 R2- Revised, sect C-10" Dim was 9 1/2, exted WW even with HD
6/11/15 R3- Revised per customer review
6/26/15 R4- Revised per customer review

Respectfully submitted,
Concrete Systems, Inc.

Stivale Saavedra
(ssaavedra@csigroup.com), Extn: 471
Engineering Assistant

9 Commercial Street, Hudson, New Hampshire 03051 Phone (603) 889-4163
Fax Number: Precast Sales (603) 889-0039
Fax Number: Shipping, Manhole Design and Engineering (603) 889-2417
CSI Group Web Site: www.csigroup.com

Drafter: Ray Yeager, AutoCAD Technician (ryeager@csigroup.com), 800-342-3374, Ext 472 - Prepared by: SSaavedr

RFI

June 26, 2015

To: Jay Lafontaine, GW Tatro Construction
RE: TAOT Bridge Replacement in Richford, VT
CSI Job #: C22312

CSI requests using Level I epoxy coated bar for the dowel bar splicers and dowel ins for connecting the headwalls to the culvert. This type of connection is required in box structures and the industry does not offer a Level II alternative.

CSI furthermore requests using Level I epoxy coated reinforcing in the wingwall anchors as these are premade stock items manufactured using epoxy reinforcing.

Submitted by:

Christopher Vick, P.E.
Director of Engineering
Concrete Systems, Inc.
cvick@csigroup.com

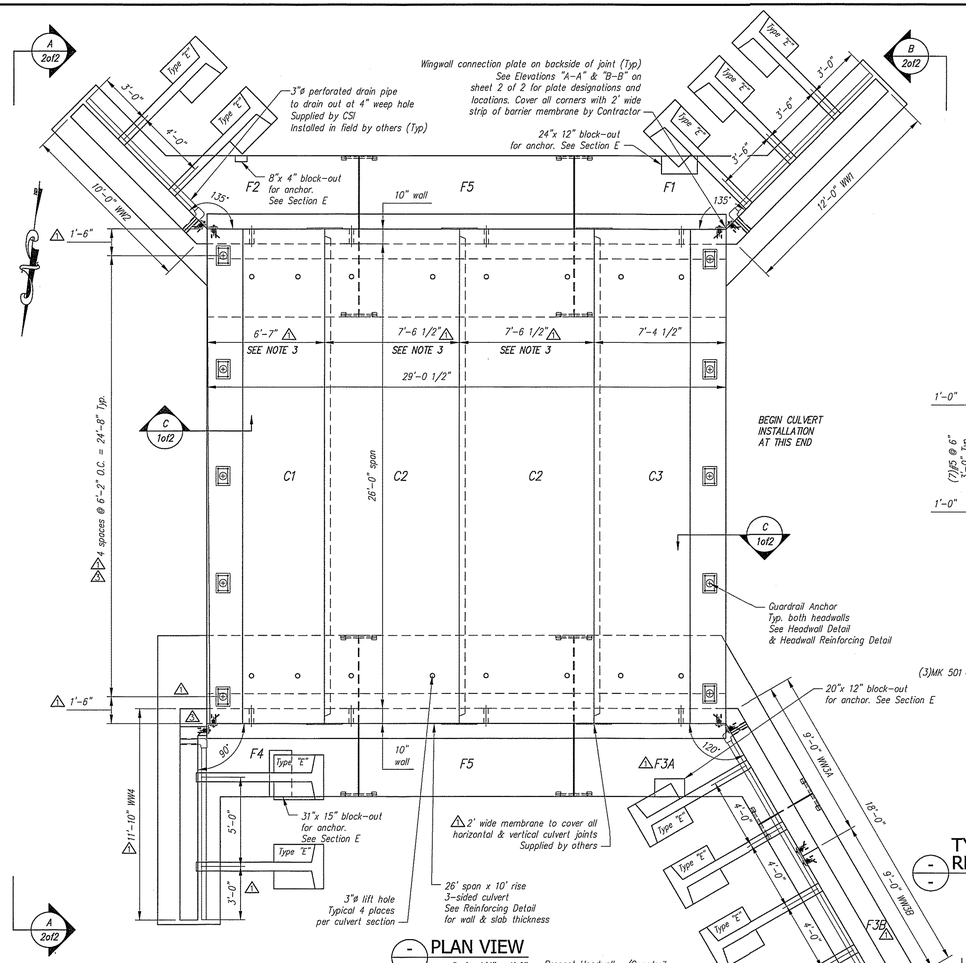

PLAN VIEW
Scale: 1/4" = 1'-0"

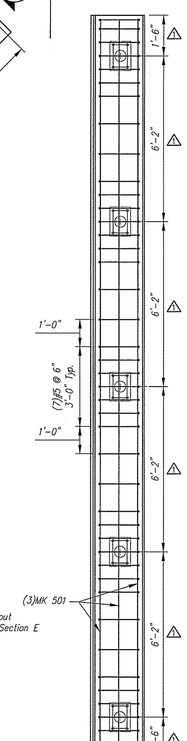

TYPICAL HEADWALL REINFORCING DETAIL
Scale: N.T.S.

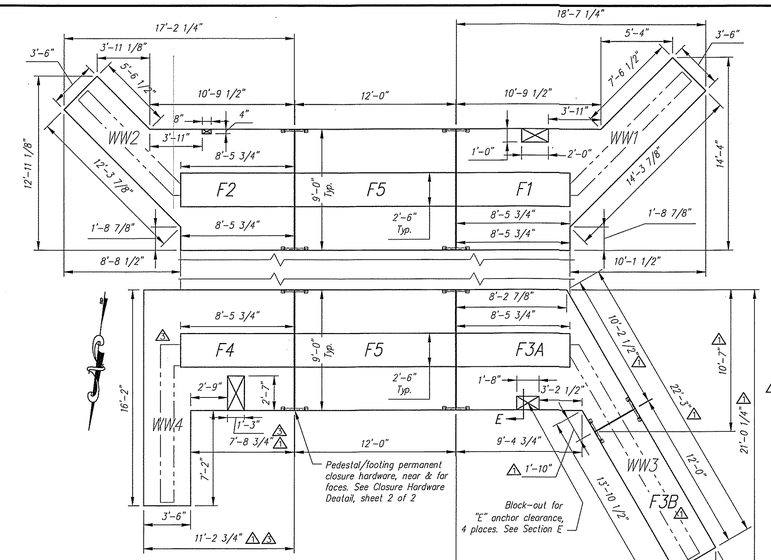

FOOTING DETAIL
Scale: N.T.S.

GENERAL NOTES:

1. Reference Standards:
   AASHTO "LRFD Bridge Design Specifications"
   ASTM C1577
2. Design Parameters:
   Live load: HL-93
   Earth Cover: 0.5' to 1.0'
   Concrete: Design strength f'c = 5000 psi
   Unit weight = 150 pcf
   Reinforcing: Pedestal/Footing - ASTM A615 (rebar) GR 60, plain(VTAOT Level I) △
   Culvert/Headwall/Wingwall - Z-Bar(rebar), GR 60(VTAOT Level II)
   Soil: Unit weight = 140 pcf
   Minimum lateral pressure coefficient .25
   Maximum lateral pressure coefficient .50
   Cover to reinforcing: 2" Top of top slab & outside faces of walls
   1 1/2" elsewhere u.n.o.
3. Dimensions include a joint gap. Actual culvert piece length is ½" shorter (i.e. C2 = 7'-6").
4. DBS are Dowel Bar Splicers and DI are Dowel Ins. Both are supplied by CSI. DI's are to be installed and cut/bent in the field by others as required.
5. Headwall design taken from contract drawing S-360A.
6. Water repellant by CSI on all exposed faces of culvert to 1' in, headwalls and △△ wingwalls. Water repellant to be Certi-Vex Penseal 244-40% (Silane-Siloxane in △ accordance with Vtrans 540.04).
7. Provide engineer a minimum fourteen (14) days notice prior to the start of fabrication and a detailed casting schedule.

△ CULVERT PIECE SCHEDULE (MX-FA5000SC30)

MARK	QTY	LENGTH	YDS	WEIGHT	
C1	1	6.54 '	15.40	31.19	TONS
C2	2	7.50 '	15.20	30.78	TONS
C3	1	7.38 '	16.50	33.41	TONS
WW1	1	12.00 '	7.77	15.73	TONS
WW2	1	10.00 '	6.35	12.86	TONS
WW3A	1	9.00 '	6.03	12.21	TONS
WW3B	1	9.00 '	5.31	10.75	TONS
WW4	1	11.83 '	8.13	16.46	TONS
F1	1	18.58 '	11.37	23.02	TONS
F2	1	17.17 '	10.85	21.97	TONS
F3A	1	13.33 '	9.80	19.85	TONS
F3B	1	12.00 '	3.11	6.30	TONS
F4	1	16.17 '	11.70	23.69	TONS
F5	2	12.00 '	11.19	22.66	TONS

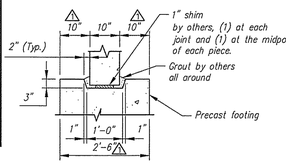

KEYWAY DETAIL
Scale: N.T.S.

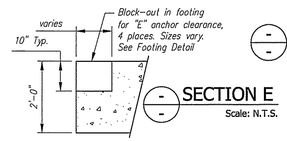

SECTION E
Scale: N.T.S.

△ IMPORTANT:
PLEASE BE SURE THAT ADDITIONAL REBAR IS PROVIDED FOR EACH SIZE FOR TESTING PURPOSES. VAOT INSPECTORS WILL BE RANDOMLY SELECTING REBAR FOR TESTS. DESIGNATE WHICH EXTRA PIECE HAS BEEN SELECTED FOR EACH SIZE AND THIS SHOULD BE NOTED ON THE PLANS. THE BARS SELECTED SHOULD HAVE A MINIMUM LENGTH OF 5 FEET.

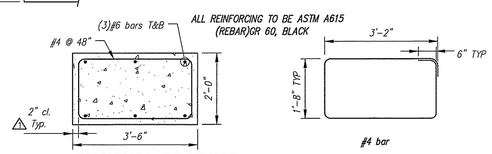

WINGWALL FOOTING REINFORCING DETAIL
Scale: N.T.S.

BENDING SCHEDULE
Scale: N.T.S.

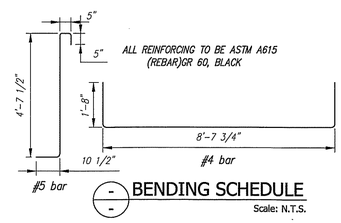

BENDING SCHEDULE
Scale: N.T.S.

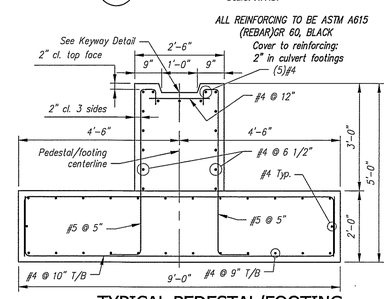

TYPICAL PEDESTAL/FOOTING REINFORCING DETAIL
Scale: N.T.S.

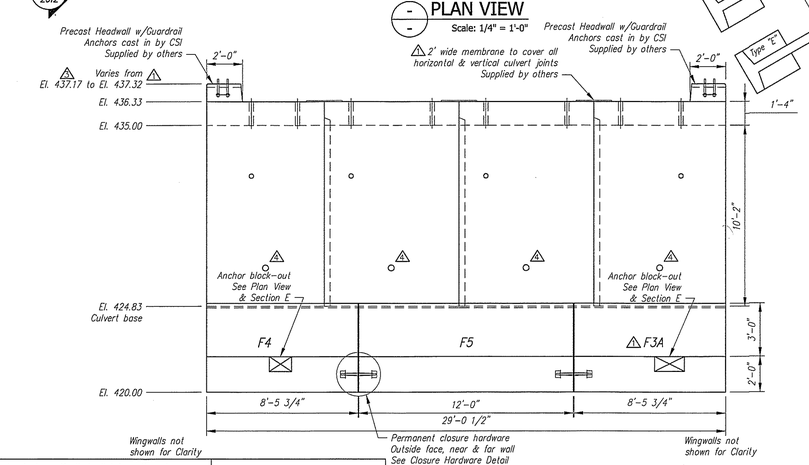

ELEVATION
Scale: 1/4" = 1'-0"

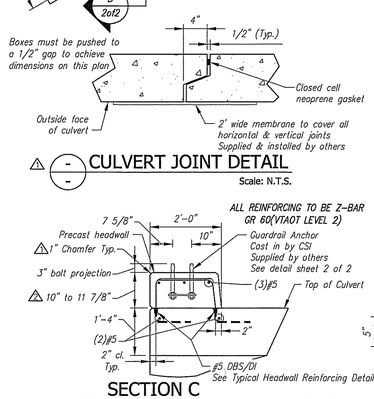

CULVERT JOINT DETAIL
Scale: N.T.S.

SECTION C TYPICAL HEADWALL DETAIL
Scale: N.T.S.

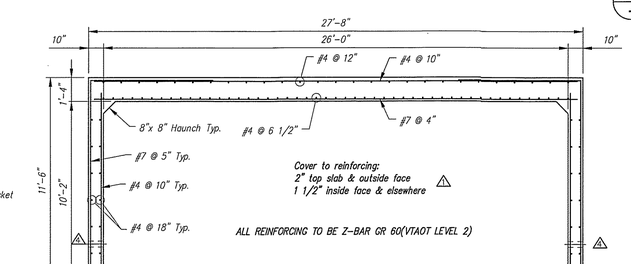

CULVERT REINFORCING DETAIL
Scale: 3/8" = 1'-0"

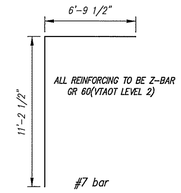

BENDING SCHEDULE
Scale: N.T.S.

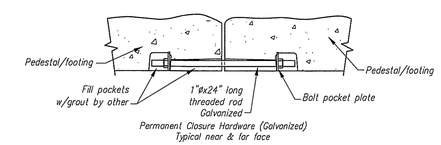

SECTION D-D
Scale: N.T.S.

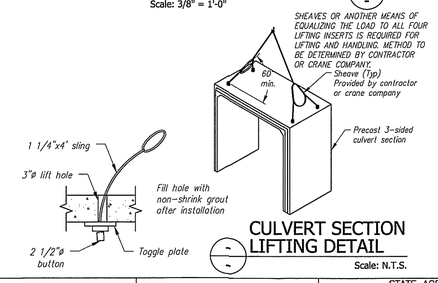

CULVERT SECTION LIFTING DETAIL
Scale: N.T.S.

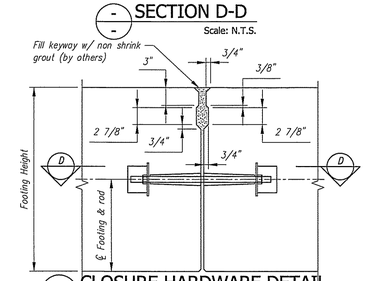

CLOSURE HARDWARE DETAIL
Scale: N.T.S.

Contractor is to verify that all information shown on drawings has been thoroughly checked, complies with the contract documents and is adequate to meet the field conditions. Some dimensions and details may differ slightly from contract drawings to accommodate the manufacturing or design process. Approval of this drawing indicates that any deviation from the contract documents has been reviewed and found to be acceptable. Production will not commence until receipt of signed, approved shop drawings.

This drawing contains information proprietary to CONCRETE SYSTEMS, INC. This drawing is disclosed with the understanding that it will be retained in confidence and its use limited solely to the purpose for which it is disclosed. It is understood that no reproduction of this drawing is authorized without permission from CONCRETE SYSTEMS, INC. and that it will be returned to CONCRETE SYSTEMS, INC. upon request.

STATE OF VERMONT
CHRISTOPHER M. WICK
NO. 77923
Structural
LICENSED
PROFESSIONAL ENGINEER
6/24/15
Stamp for structural design only

Rev.	Date	DESCRIPTION	By
7			
6			
5			
4	17JUN2015	REVISED PER CUSTOMER REVIEW	BSS
3	04JUN2015	REVISED PER CUSTOMER REVIEW	RY
2	28MAY2015	REVISED PER CUSTOMER REVIEW, SECTION C-10" DIM WAS 9 1/2", EXTENDED WINGWALLS EVEN WITH HDWALL	RY
1	14MAY2015	REVISED PER CUSTOMER REVIEW, MOVED WW4, ADDED F3A & F3B, REVISED GUARDRAIL ANCHORS	RY

REVISIONS

This drawing is based upon information provided from the following documents and/or sources:
Engineer: STATE OF VT/AOT PROGRAM DEVELOPMENT
Project No: ----
Drawings: STATE OF VT/AOT PROPOSED IMPROVEMENT BRIDGE PROJECT, TOWN OF RICHFORD SHEETS 1,2,4,22,23,24 OF 36
Specifications: STANDARD SPECIFICATIONS FOR CONSTRUCTION DATED 2011

Other Sources: ----

Concrete Systems Inc.
9 Commercial St., Hudson, NH,03051
Phone 603-889-4163
Fax 603-889-2417

STATE AGENCY
VTrans Working to Get You There
Drawn By R. YEAGER Date 31MAR2015
Reviewed By B. KOLAWOLE Date
Approved By C. VICK Date 17JUN2015

G.W. TATRO CONSTRUCTION, INC.
VT/AOT BRIDGE REPLACEMENT- ROAD IMPROVEMENT
RICHFORD, VT.

D
26' SPAN X 10' RISE 3-SIDED CULVERT
Drawing No. C22312-L01A
REV 4
Quantity: 1
Project No: BRF030229
SHEET 1 OF 2

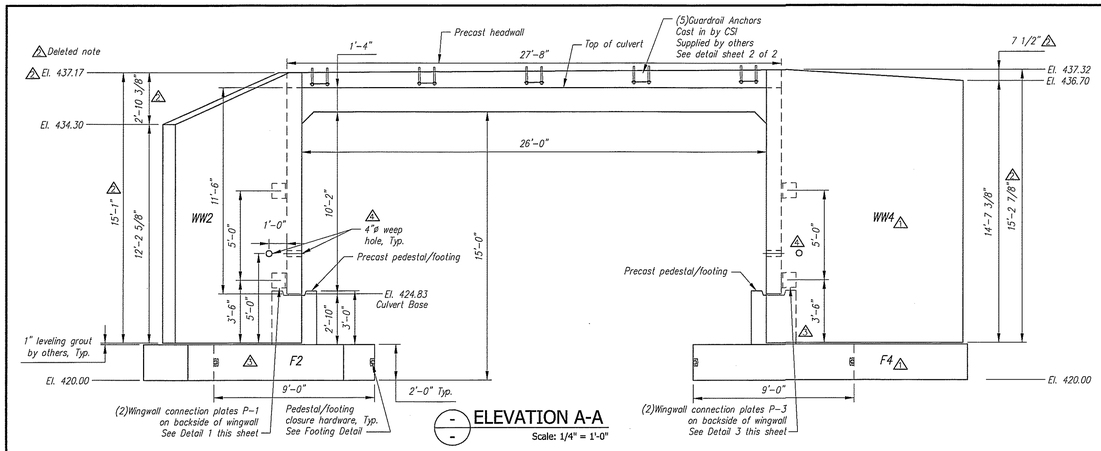

ELEVATION A-A
Scale: 1/4" = 1'-0"

WINGWALL GENERAL NOTES:

1. Reference standard:
   AASHTO LRFD Specifications
2. Design Parameters:
   Nominal Bearing Resistance: 10 ksf (Footing width > 6ft.)
   Earth Cover: 1.0'±
   Concrete: Design strength f'c = 5000 psi
   Unit weight = 150 pcf
   Reinforcing: Z-BAR(rebar), GR 60(VTAOT Level II)
   Soil: Unit weight = 125 pcf
   Minimum lateral pressure coefficient .25
   Maximum lateral pressure coefficient .50
   Cover to reinforcing: 2" u.n.o.
3. The wingwalls have been designed for general site conditions. The project engineer shall be responsible for the structure's suitability to the existing site conditions and for the hydraulic evaluation, including scour and confirmation of soil conditions.
4. Prior to construction, contractor must verify all elevations shown through the engineer.

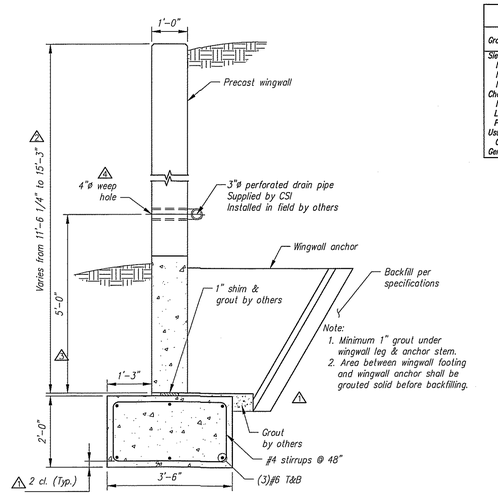

TYPICAL WINGWALL DETAILS
Scale: N.T.S.

BACKFILL DESCRIPTION							
Group Classification	A-1		A-3	A-2			
	A-1-a	A-1-b		A-2-4	A-2-5	A-2-6	A-2-7
Sieve Analysis, Percent Passing							
No. 10	50 max.						
No. 40	30 max.	50 max.	51 min.				
No. 200	15 max.	25 max.	10 max.	35 max.	35 max.	35 max.	35 max.
Characteristics of Fraction Passing No. 40							
Liquid Limit				40 max.	41 min.	40 max.	41 min.
Plasticity Index	6 max.		N.P.	10 max.	10 max.	11 min.	11 min.
Usual Types of Significant Constituent Materials	Stone Fragments, Gravel & Sand		Fine Sand	Silty or Clayey Gravel and Sand			
General Rating as Subgrade	Excellent to Good						

NOTES
1. BACKFILLING OPERATIONS WITHIN THE C.B.Z. SHALL BE PERFORMED IN LIFTS OF 8" OR LESS (LOOSE DEPTH).
2. MAXIMUM DRY DENSITY SHALL BE DETERMINED BY AASHTO T-99 OR OTHER APPROVED METHODS.
3. BACKFILL SHALL BE COMPACTED IN LAYERS UNTIL THE DENSITY IS NOT LESS THAN 95% OF THE MAXIMUM DRY DENSITY.

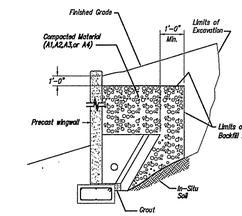

WINGWALL BACKFILL REQUIREMENTS

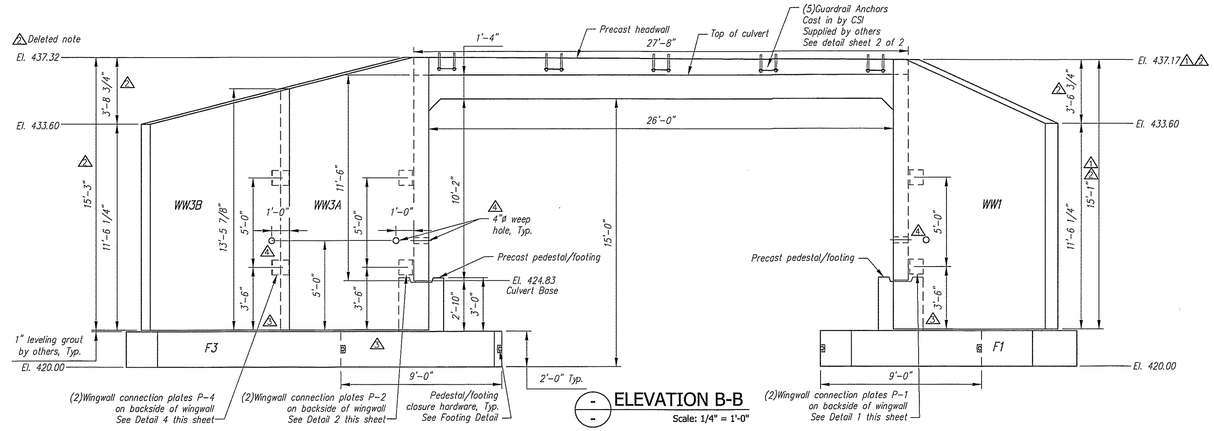

ELEVATION B-B
Scale: 1/4" = 1'-0"

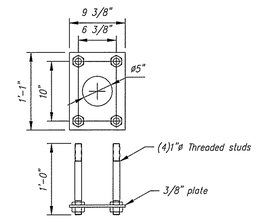

Reference VT/AOT drawing Standard S-360A

GUARDRAIL ANCHOR DETAIL
Scale: N.T.S.

ALL REINFORCING TO BE Z-BAR GR 60(VTAOT LEVEL 2)

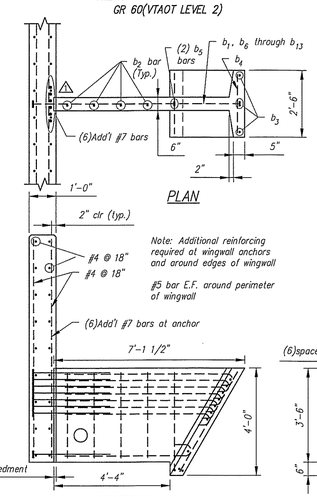

Note: Additional reinforcing required at wingwall anchors and around edges of wingwall

BAR LIST					
MARK	QTY.	SIZE	a	TYPE	LENGTH
b_1	8	#6	3'-0"	3	——
b_2	4	#5	——	Str.	3'-2"
b_3	4	#5	——	Str.	4'-3"
b_4	11	#5	——	Str.	2'-2"
b_5	2	#5	3'-8"	2	——
b_6	1	#5	4'-9"	1	——
b_7	1	#5	5'-4"	1	——
b_8	1	#5	5'-6"	1	——
b_9	1	#5	5'-8"	1	——
b_{10}	1	#5	5'-10"	1	——
b_{11}	1	#5	6'-0"	1	——
b_{12}	1	#5	6'-1"	1	——
b_{13}	1	#5	6'-3"	1	——

Note: "Str." denotes straight bar. Standard clearance = 2"

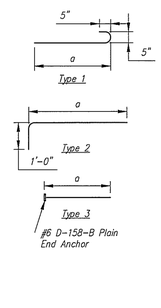

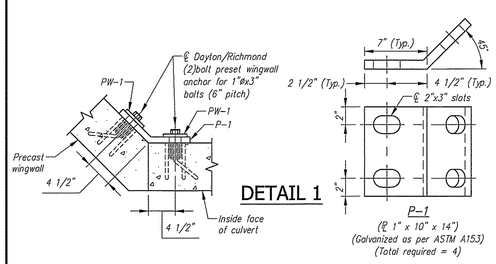

DETAIL 1

P-1
(℄ 1" x 10" x 14")
(Galvanized as per ASTM A153)
(Total required = 4)

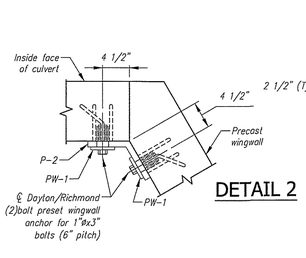

DETAIL 2

P-2
(℄ 1" x 10" x 14")
(Galvanized as per ASTM A153)
(Total required = 2)

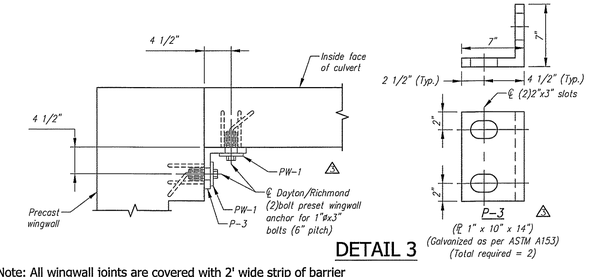

DETAIL 3

P-3
(℄ 1" x 10" x 14")
(Galvanized as per ASTM A153)
(Total required = 2)

WINGWALL CONNECTION PLATE DETAILS
Scale: N.T.S.

Note: All wingwall joints are covered with 2' wide strip of barrier membrane by others. See note, Sheet 1, Plan View.

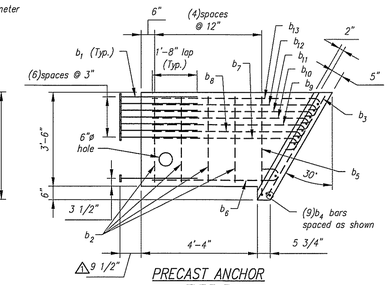

PRECAST ANCHOR TYPE E

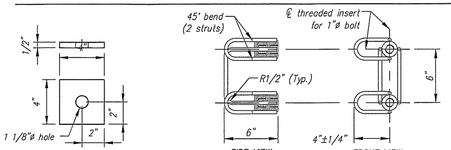

DAYTON/RICHMOND TWO BOLT PRESET ANCHOR
Anchors and bolts are electro-zinc plated

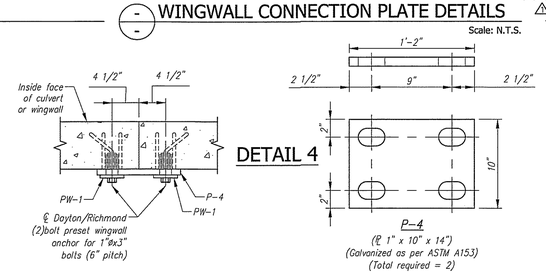

DETAIL 4

P-4
(℄ 1" x 10" x 14")
(Galvanized as per ASTM A153)
(Total required = 2)

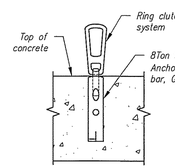

FOOTING LIFTING HARDWARE DETAIL
Scale: N.T.S.

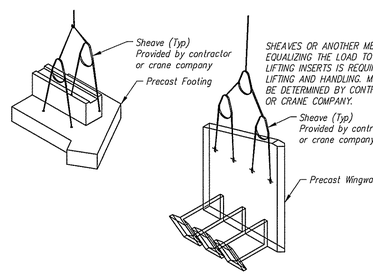

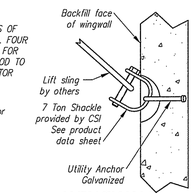

WINGWALL LIFTING DETAIL
Scale: N.T.S.

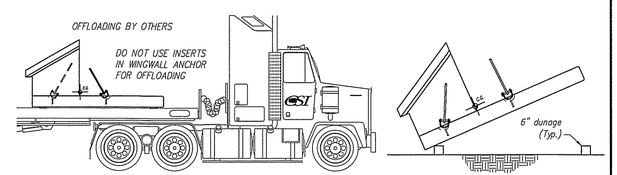

WINGWALL OFFLOADING & TRIPPING DETAIL
Scale: N.T.S.

Contractor is to verify that all information shown on drawings has been thoroughly checked, complies with the contract documents and is adequate to meet the field conditions. Some dimensions and details may differ slightly from contract drawings to accommodate the manufacturing or design process. Approval of this drawing indicates that any deviation from the contract documents has been reviewed and found to be acceptable. Production will not commence until receipt of signed, approved shop drawings.

This drawing contains information proprietary to CONCRETE SYSTEMS, INC. This drawing is disclosed with the understanding that it will be retained in confidence and its use limited solely to the purpose for which it is disclosed. It is understood that no reproduction of this drawing is authorized without permission from CONCRETE SYSTEMS, INC. and that it will be returned to CONCRETE SYSTEMS, INC. upon request.

STATE OF VERMONT CHRISTOPHER M. RICE NO. 77628 Structural LICENSED PROFESSIONAL ENGINEER
6/24/15
Stamp for structural design only

Rev.	Date	DESCRIPTION	By
7			
6			
5			
4	17JUN2015	REVISED PER CUSTOMER REVIEW	BSS
3	04JUN2015	REVISED PER CUSTOMER REVIEW	RY
2	28MAY2015	EL A-A & B-B: 437.17 WAS 437.13, EXTENDED WINGWALLS EVEN WITH HEADWALL	RY
1	14MAY2015	REVISED PER CUSTOMER REVIEW, SEE SHEET 1	RY

REVISIONS

This drawing is based upon information provided from the following documents and/or sources:
Engineer: STATE OF VT/AOT PROGRAM DEVELOPMENT
Project No: ----
Drawings: STATE OF VT/AOT PROPOSED IMPROVEMENT BRIDGE PROJECT, TOWN OF RICHFORD SHEETS 1,2,4,22,23,24 OF 36
Specifications: STANDARD SPECIFICATIONS FOR CONSTRUCTION DATED 2011

Other Sources: ----

Concrete Systems Inc.
9 Commercial St., Hudson, NH,03051
Phone 603-889-4163
Fax 603-889-2417

STATE AGENCY
VTrans Working to Get You There!

Drawn By R. YEAGER	Date 31MAR2015	
Reviewed By B. KOLAWOLE	Date	
Approved By C. VICK	Date 17JUN2015	

G.W. TATRO CONSTRUCTION, INC.
VT/AOT BRIDGE REPLACEMENT– ROAD IMPROVEMENT
RICHFORD, VT.

D — 26' SPAN X 10' RISE 3-SIDED CULVERT — REV 4
Drawing No. C22312-L01B
Quantity: 1 | Project No: BRF030229 | SHEET 2 OF 2

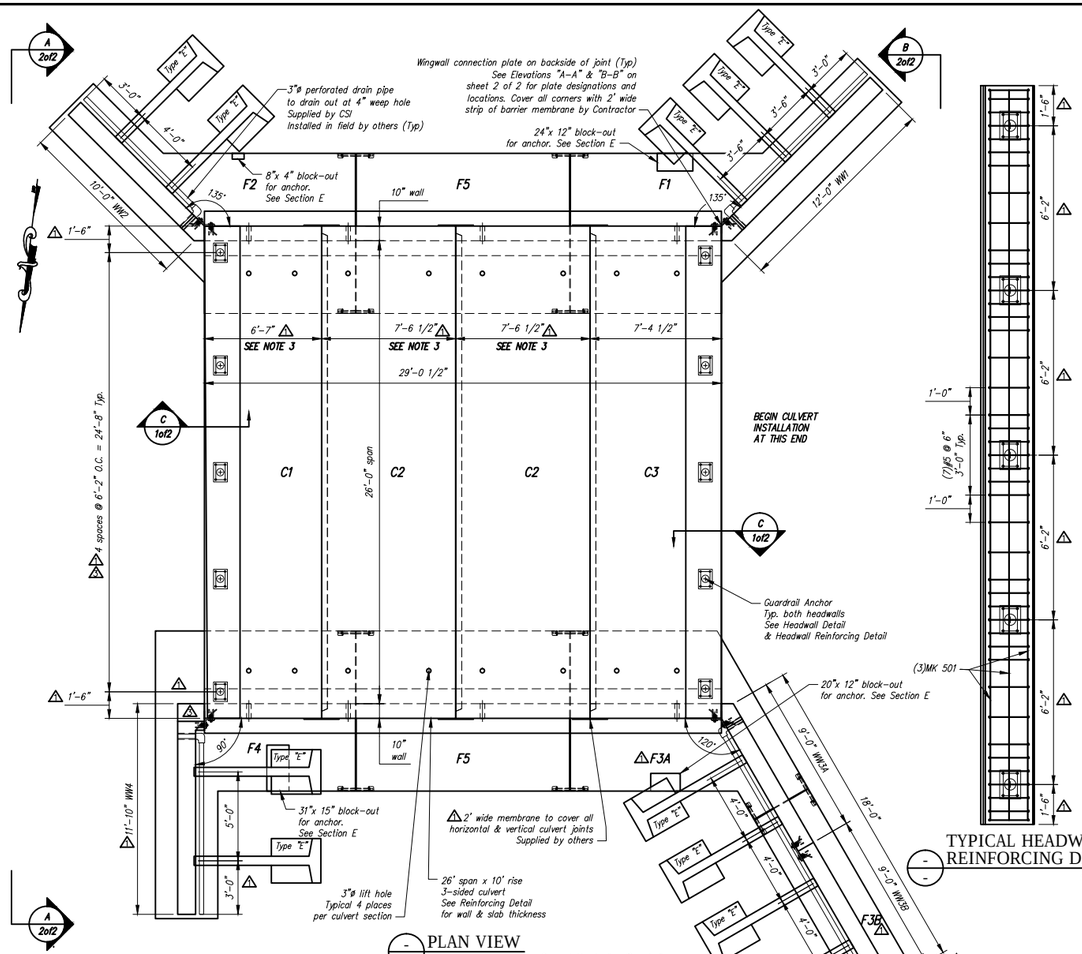

PLAN VIEW
Scale: 1/4" = 1'-0"

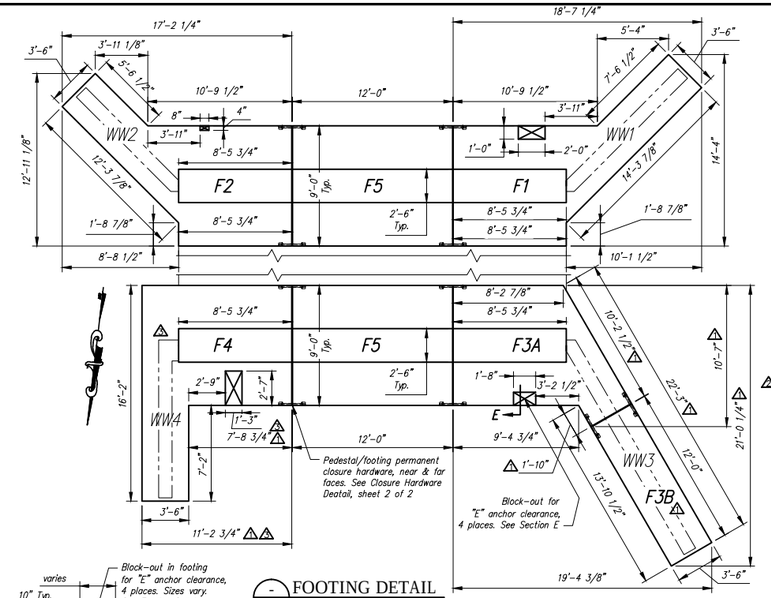

FOOTING DETAIL
Scale: N.T.S.

SECTION E
Scale: N.T.S.

GENERAL NOTES:

1. Reference Standards:
   AASHTO "LRFD Bridge Design Specifications"
   ASTM C1577
2. Design Parameters:
   Live load: HL-93
   Earth Cover: 0.5' to 1.0'
   Concrete: Design strength f'c = 5000 psi
   Unit weight = 150 pcf
   Reinforcing: Pedestal/Footing - ASTM A615 (rebar) GR 60, plain(VTAOT Level I)
   Culvert/Headwall/Wingwall - Z-Bar(rebar), GR 60(VTAOT Level II)
   Soil: Unit weight = 140 pcf
   Minimum lateral pressure coefficient .25
   Maximum lateral pressure coefficient .50
   Cover to reinforcing: 2" Top of top slab & outside faces of walls
   1 1/2" elsewhere u.n.o.
3. Dimensions include a joint gap. Actual culvert piece length is ½" shorter (i.e. C2 = 7'-6").
4. DBS are Dowel Bar Splicers and DI are Dowel Ins. Both are supplied by CSI. DI's are to be installed and cut/bent in the field by others as required.
5. Headwall design taken from contract drawing S-360A.
6. Water repellant by CSI on all exposed faces of culvert to 1' in, headwalls and wingwalls. Water repellant to be Certi-Vex Penseal 244-40% (Silane-Siloxane in accordance with Vtrans 540.04).
7. Provide engineer a minimum fourteen (14) days notice prior to the start of fabrication and a detailed casting schedule.

CULVERT PIECE SCHEDULE (MX-PA5000SC30)

MARK	QTY	LENGTH	YDS	WEIGHT	
C1	1	6.54 '	15.40	31.19	TONS
C2	2	7.50 '	15.20	30.78	TONS
C3	1	7.38 '	16.50	33.41	TONS
WW1	1	12.00 '	7.77	15.73	TONS
WW2	1	10.00 '	6.35	12.86	TONS
WW3A	1	9.00 '	6.03	12.21	TONS
WW3B	1	9.00 '	5.31	10.75	TONS
WW4	1	11.83 '	8.13	16.46	TONS
F1	1	18.58 '	11.37	23.02	TONS
F2	1	17.17 '	10.85	21.97	TONS
F3A	1	13.33 '	9.80	19.85	TONS
F3B	1	12.00 '	3.11	6.30	TONS
F4	1	16.17 '	11.70	23.69	TONS
F5	2	12.00 '	11.19	22.66	TONS

IMPORTANT:
PLEASE BE SURE THAT ADDITIONAL REBAR IS PROVIDED FOR EACH SIZE FOR TESTING PURPOSES. VAOT INSPECTORS WILL BE RANDOMLY SELECTING REBAR FOR TESTS. DESIGNATE WHICH EXTRA PIECE HAS BEEN SELECTED FOR EACH SIZE AND THIS SHOULD BE NOTED ON THE PLANS. THE BARS SELECTED SHOULD HAVE A MINIMUM LENGTH OF 5 FEET.

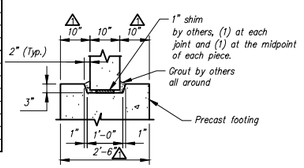

KEYWAY DETAIL
Scale: N.T.S.

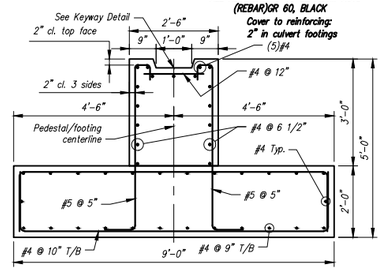

TYPICAL PEDESTAL/FOOTING REINFORCING DETAIL
Scale: N.T.S.

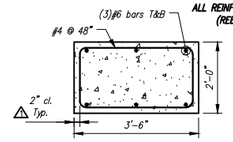

WINGWALL FOOTING REINFORCING DETAIL
Scale: N.T.S.

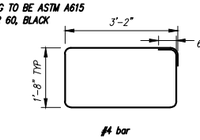

BENDING SCHEDULE
Scale: N.T.S.

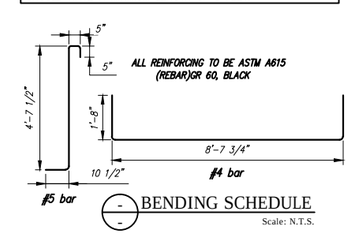

BENDING SCHEDULE
Scale: N.T.S.

TYPICAL HEADWALL REINFORCING DETAIL
Scale: N.T.S.

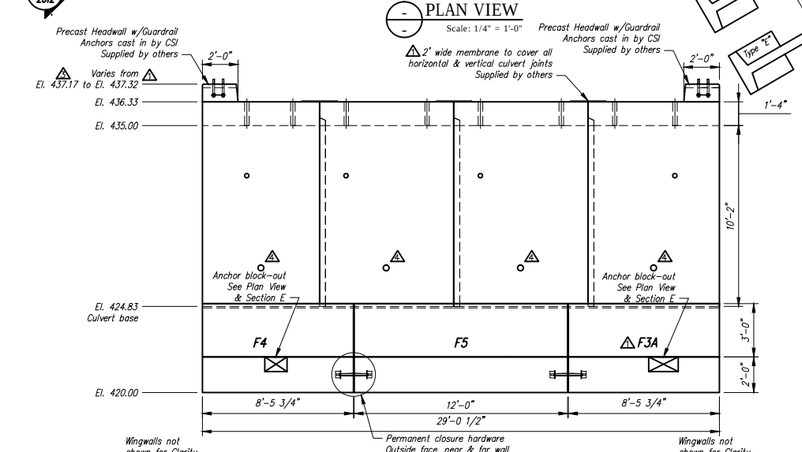

ELEVATION
Scale: 1/4" = 1'-0"

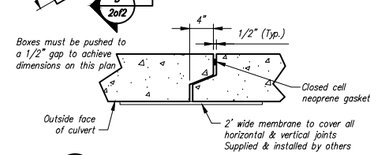

CULVERT JOINT DETAIL
Scale: N.T.S.

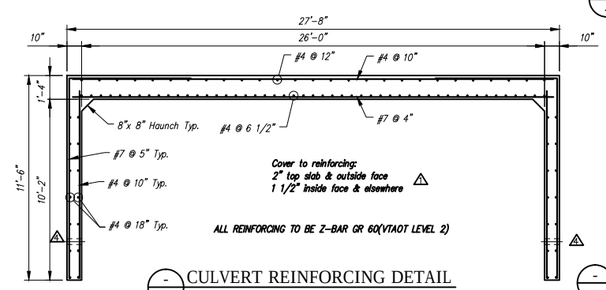

CULVERT REINFORCING DETAIL
Scale: 3/8" = 1'-0"

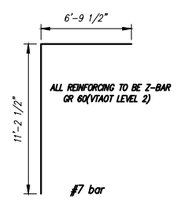

BENDING SCHEDULE
Scale: N.T.S.

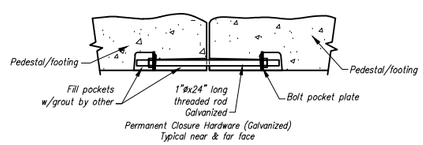

SECTION D-D
Scale: N.T.S.

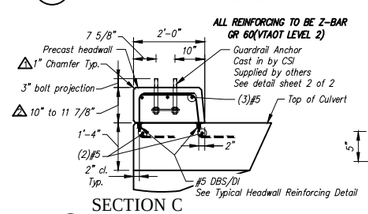

SECTION C
TYPICAL HEADWALL DETAIL
Scale: N.T.S.

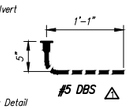

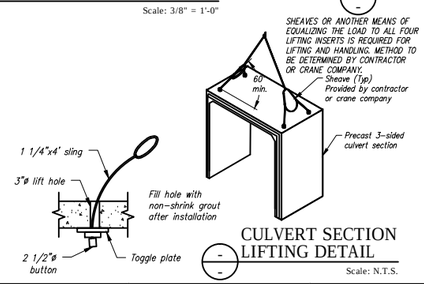

CULVERT SECTION LIFTING DETAIL
Scale: N.T.S.

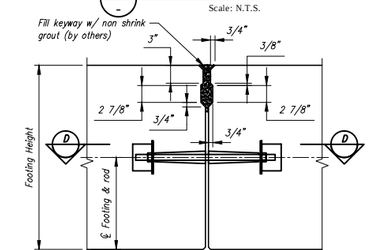

CLOSURE HARDWARE DETAIL
Scale: N.T.S.

Contractor is to verify that all information shown on drawings has been thoroughly checked, complies with the contract documents and is adequate to meet the field conditions. Some dimensions and details may differ slightly from contract drawings to accommodate the manufacturing or design process. Approval of this drawing indicates that any deviation from the contract documents has been reviewed and found to be acceptable. Production will not commence until receipt of signed, approved shop drawings.

This drawing contains information proprietary to CONCRETE SYSTEMS, INC. This drawing is disclosed with the understanding that it will be retained in confidence and its use limited solely to the purpose for which it is disclosed. It is understood that no reproduction of this drawing is authorized without permission from CONCRETE SYSTEMS, INC. and that it will be returned to CONCRETE SYSTEMS, INC. upon request.

Stamp for structural design only

Rev.	Date	DESCRIPTION	By
7			
6			
5			
4	17JUN2015	REVISED PER CUSTOMER REVIEW	BSS
3	04JUN2015	REVISED PER CUSTOMER REVIEW	RY
2	28MAY2015	REVISED PER CUSTOMER REVIEW, SECTION C-10" DIM WAS 9 1/2", EXTENDED WINGWALLS EVEN WITH HDWALL	RY
1	14MAY2015	REVISED PER CUSTOMER REVIEW, MOVED WW4, ADDED F3A & F3B, REVISED GUARDRAIL ANCHORS	RY

REVISIONS

This drawing is based upon information provided from the following documents and/or sources:

Engineer: STATE OF VT/AOT PROGRAM DEVELOPMENT
Project No: ----
Drawings: STATE OF VT/AOT PROPOSED IMPROVEMENT BRIDGE PROJECT, TOWN OF RICHFORD SHEETS 1,2,4,22,23,24 OF 36
Specifications: STANDARD SPECIFICATIONS FOR CONSTRUCTION DATED 2011
Other Sources: ----

CSI Concrete Systems Inc.
9 Commercial St., Hudson, NH 03051
Phone 603-889-4163
Fax 603-889-2417

STATE AGENCY
VTrans

Drawn by R. YEAGER	Date 31MAR2015	
Reviewed by B. KOLAWOLE	Date	
Approved by C. VICK	Date 17JUN2015	

G.W. TATRO CONSTRUCTION, INC.
VT/AOT BRIDGE REPLACEMENT- ROAD IMPROVEMENT
RICHFORD, VT.

D — 26' SPAN X 10' RISE 3-SIDED CULVERT — REV 4
Drawing No. C22312-L01A
Quantity: 1 | Project No: BRF030229 | SHEET 1 OF 2

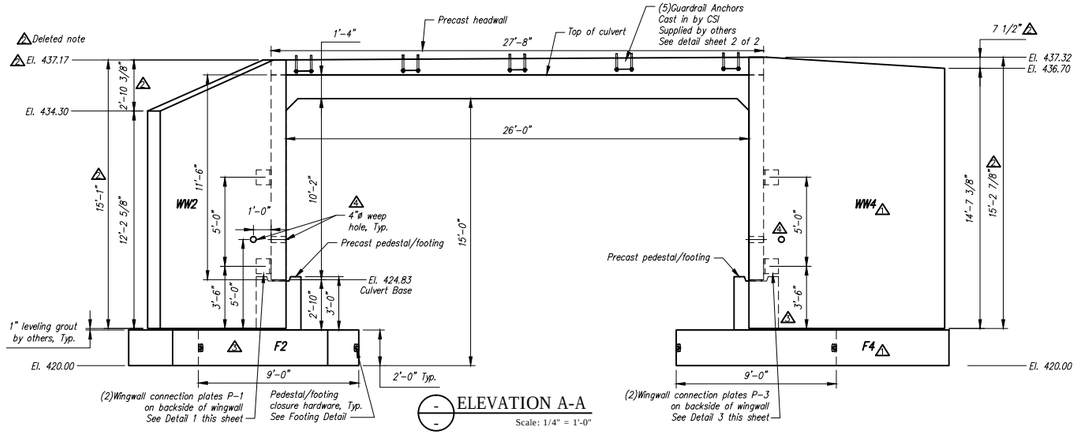

ELEVATION A-A

Scale: 1/4" = 1'-0"

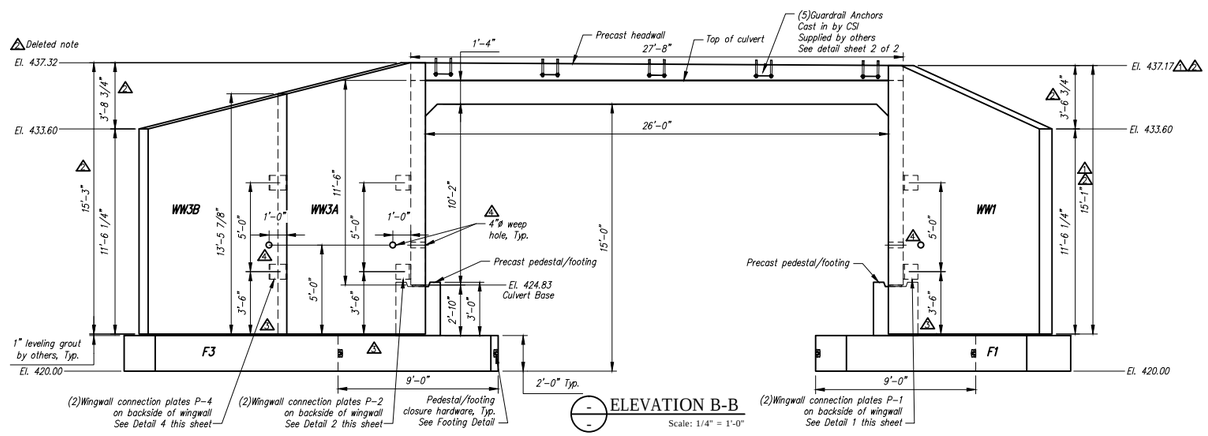

ELEVATION B-B

Scale: 1/4" = 1'-0"

WINGWALL GENERAL NOTES:

1. Reference standard:
   AASHTO LRFD Specifications
2. Design Parameters:
   Nominal Bearing Resistance: 10 ksf (Footing width > 6ft.)
   Earth Cover: 1.0±
   Concrete: Design strength f'c = 5000 psi
   Unit weight = 150 pcf
   Reinforcing: Z-BAR(rebar), GR 60(VTAOT Level II)
   Soil: Unit weight = 125 pcf
   Minimum lateral pressure coefficient .25
   Maximum lateral pressure coefficient .50
   Cover to reinforcing: 2" u.n.o.
3. The wingwalls have been designed for general site conditions. The project engineer shall be responsible for the structure's suitability to the existing site conditions and for the hydraulic evaluation, including scour and confirmation of soil conditions.
4. Prior to construction, contractor must verify all elevations shown through the engineer.

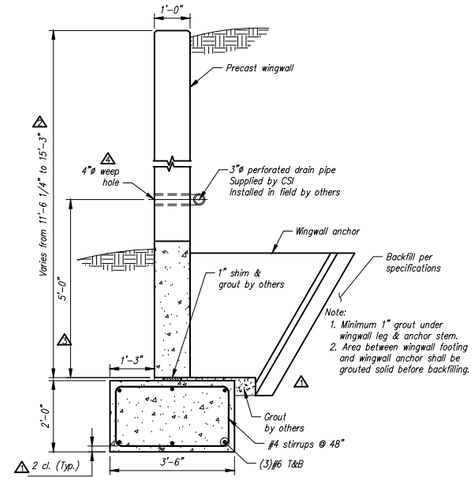

TYPICAL WINGWALL DETAILS

Scale: N.T.S.

BACKFILL DESCRIPTION							
Group Classification	A-1		A-3	A-2			
	A-1-a	A-1-b		A-2-4	A-2-5	A-2-6	A-2-7
Sieve Analysis, Percent Passing							
No. 10	50 max.						
No. 40	30 max.	50 max.	51 min.				
No. 200	15 max.	25 max.	10 max.	35 max.	35 max.	35 max.	35 max.
Characteristics of Fraction Passing No. 40							
Liquid Limit				40 max.	41 min.	40 max.	41 min.
Plasticity Index	6 max.		N.P.	10 max.	10 max.	11 min.	11 min.
Usual Types of Significant Constituent Materials	Stone Fragments, Gravel & Sand		Fine Sand	Silty or Clayey Gravel and Sand			
General Rating as Subgrade	Excellent to Good						

NOTES
1. BACKFILLING OPERATIONS WITHIN THE C.B.Z. SHALL BE PERFORMED IN LIFTS OF 8" OR LESS (LOOSE DEPTH).
2. MAXIMUM DRY DENSITY SHALL BE DETERMINED BY AASHTO T-99 OR OTHER APPROVED METHODS.
3. BACKFILL SHALL BE COMPACTED IN LAYERS UNTIL THE DENSITY IS NOT LESS THAN 95% OF THE MAXIMUM DRY DENSITY.

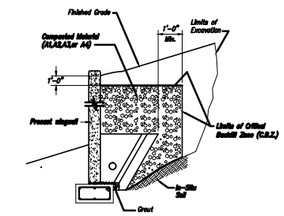

WINGWALL BACKFILL REQUIREMENTS

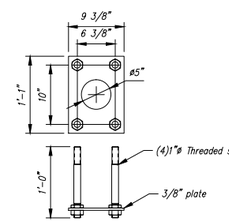

Reference VT/AOT drawing Standard S-360A

GUARDRAIL ANCHOR DETAIL

Scale: N.T.S.

ALL REINFORCING TO BE Z-BAR GR 60(VTAOT LEVEL 2)

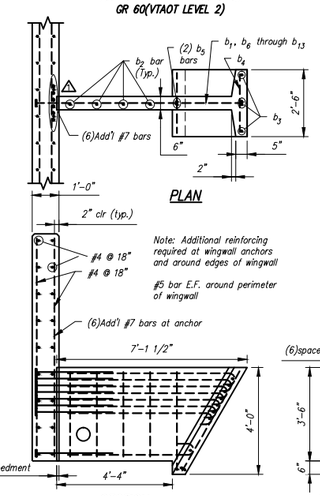

PLAN

SECTION

Note: Additional reinforcing required at wingwall anchors and around edges of wingwall

BAR LIST					
MARK	QTY.	SIZE	a	TYPE	LENGTH
b_1	8	#6	3'-0"	3	——
b_2	4	#5	——	Str.	3'-2"
b_3	4	#5	——	Str.	4'-3"
b_4	11	#5	——	Str.	2'-2"
b_5	2	#5	3'-8"	2	——
b_6	1	#5	4'-9"	1	——
b_7	1	#5	5'-4"	1	——
b_8	1	#5	5'-6"	1	——
b_9	1	#5	5'-8"	1	——
b_{10}	1	#5	5'-10"	1	——
b_{11}	1	#5	6'-0"	1	——
b_{12}	1	#5	6'-1"	1	——
b_{13}	1	#5	6'-3"	1	——

Note: "Str." denotes straight bar. Standard clearance = 2"

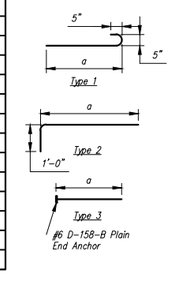

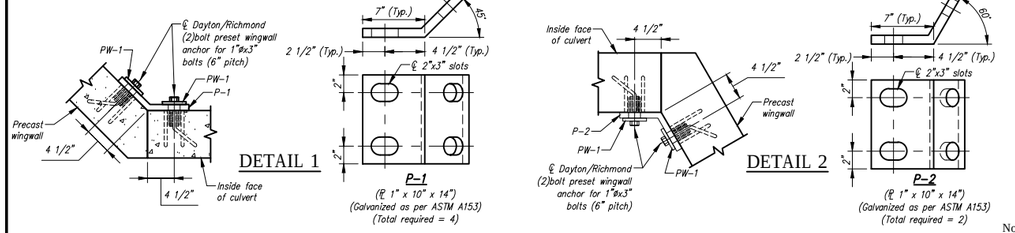

WINGWALL CONNECTION PLATE DETAILS

Scale: N.T.S.

Note: All wingwall joints are covered with 2' wide strip of barrier membrane by others. See note, Sheet 1, Plan View.

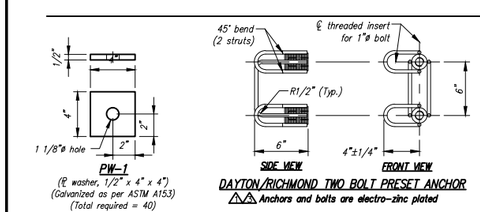

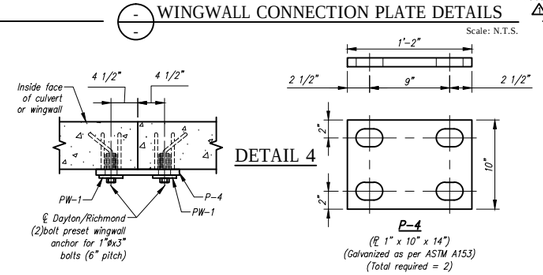

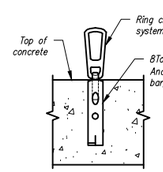

FOOTING LIFTING HARDWARE DETAIL

Scale: N.T.S.

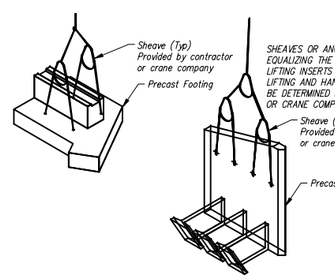

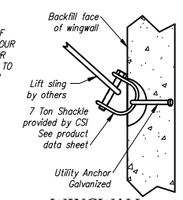

WINGWALL LIFTING DETAIL

Scale: N.T.S.

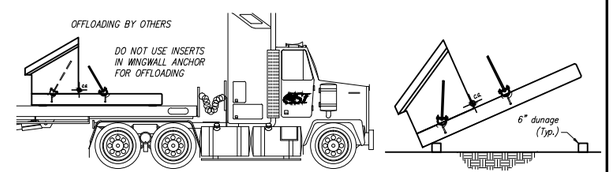

WINGWALL OFFLOADING & TRIPPING DETAIL

Scale: N.T.S.

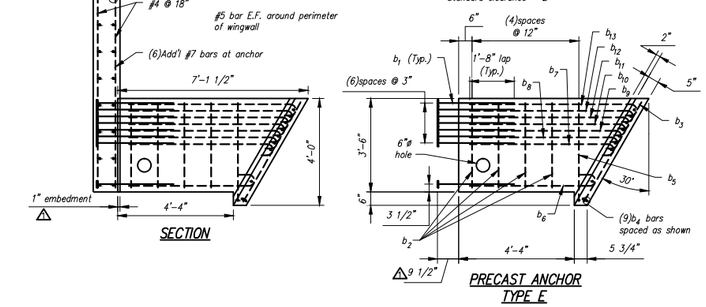

PRECAST ANCHOR TYPE E

Contractor is to verify that all information shown on drawings has been thoroughly checked, complies with the contract documents and is adequate to meet the field conditions. Some dimensions and details may differ slightly from contract drawings to accommodate the manufacturing or design process. Approval of this drawing indicates that any deviation from the contract documents has been reviewed and found to be acceptable. Production will not commence until receipt of signed, approved shop drawings.

This drawing contains information proprietary to CONCRETE SYSTEMS, INC. This drawing is disclosed with the understanding that it will be retained in confidence and its use limited solely to the purpose for which it is disclosed. It is understood that no reproduction of this drawing is authorized without permission from CONCRETE SYSTEMS, INC. and that it will be returned to CONCRETE SYSTEMS, INC. upon request.

Stamp for structural design only

Rev.	Date	DESCRIPTION	By
7			
6			
5			
4	17JUN2015	REVISED PER CUSTOMER REVIEW	BSS
3	04JUN2015	REVISED PER CUSTOMER REVIEW	RY
2	28MAY2015	EL A-A & B-B: 437.17 WAS 437.13, EXTENDED WINGWALLS EVEN WITH HEADWALL	RY
1	14MAY2015	REVISED PER CUSTOMER REVIEW, SEE SHEET 1	RY

REVISIONS

This drawing is based upon information provided from the following documents and/or sources:

Engineer: STATE OF VT/AOT PROGRAM DEVELOPMENT
Project No: ----
Drawings: STATE OF VT/AOT PROPOSED IMPROVEMENT BRIDGE PROJECT, TOWN OF RICHFORD SHEETS 1,2,4,22,23,24 OF 36
Specifications: STANDARD SPECIFICATIONS FOR CONSTRUCTION DATED 2011
Other Sources: ----

Concrete Systems Inc.
9 Commercial St., Hudson, NH,03051
Phone 603-889-4163
Fax 603-889-2417

STATE AGENCY
VTrans

Drawn By	Date
R. YEAGER	31MAR2015
Reviewed By	Date
B. KOLAWOLE	
Approved By	Date
C. VICK	17JUN2015

G.W. TATRO CONSTRUCTION, INC.
VT/AOT BRIDGE REPLACEMENT– ROAD IMPROVEMENT
RICHFORD, VT.

D — 26' SPAN X 10' RISE 3-SIDED CULVERT — REV 4
Drawing No. C22312-L01B
Quantity: 1 | Project No: BRF030229 | SHEET 2 OF 2

QUANTITY = 1
WEIGHT = 31.19 TONS

C1 - BILL OF MATERIALS / EMBEDS				
CSI ID#	DESCRIPTION	QTY	UM	COMMENTS
4 DTJ	CERTI-VEX PENSEAL 244-40%	1.30	GA	
EM-0005A	1" X 6 " PRESET WING INSERTS	4	EA	
EM-00033	3" FOAM CORE PVC	7	FT	
DTJ	DBSAE #5 Z-BAR GR 60 VTAOT LEVEL II	86	EA	DOWEL BAR SPLICER
DTJ	REBAR #4 Z-BAR GR 60 VTAOT LEVEL II	696	LB	
DTJ	REBAR #5 Z-BAR GR 60 VTAOT LEVEL II	57	LB	
DTJ	REBAR #7 Z-BAR GR 60 VTAOT LEVEL II	2281	LB	
MX-FA5000SC30	MIX DESIGN - FLY ASH 5000 SELF CONSOLIDATING	13.62	CY	
C1 HEADWALL - BILL OF MATERIALS / EMBEDS				
DTJ	GUARDRAIL ANCHOR	5	EA	SUPPLIED BY OTHERS
DTJ	DI #5 X 28" Z-BAR GR 60 VTAOT LEVEL II	86	EA	DOWEL IN
DTJ	REBAR #5 Z-BAR GR 60 VTAOT LEVEL II	86	LB	
MX-FA5000SC30	MIX DESIGN - FLY ASH 5000 SELF CONSOLIDATING	1.78	CY	

C1 Culvert Rebar Schedule			
MK		QTY	LENGTH
401	#4	16	10 ' - 6 "
402	#4	8	27 ' - 0 "
403	#4	104	6 ' - 4 "
501	#5	2	27 ' - 4 "
701	#7	32	18 ' - 0 "
702	#7	20	27 ' - 0 "

C1 HW Rebar Schedule			
MK		QTY	LENGTH
501	#5	3	27 ' - 4 "

4 Culvert piece length is ½" shorter on shop drawing than on layout drawing. Layout dimension includes joint gap.

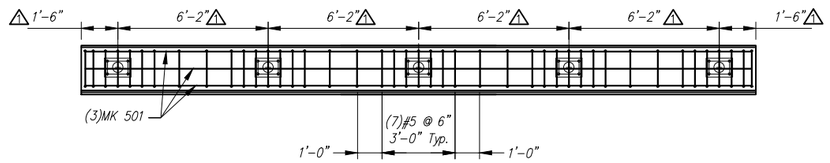

4 Typical Layout at each Guardrail Anchor
See Section A

PLAN VIEW HEADWALL REINFORCING DETAIL

Scale: 1/4" = 1'-0"

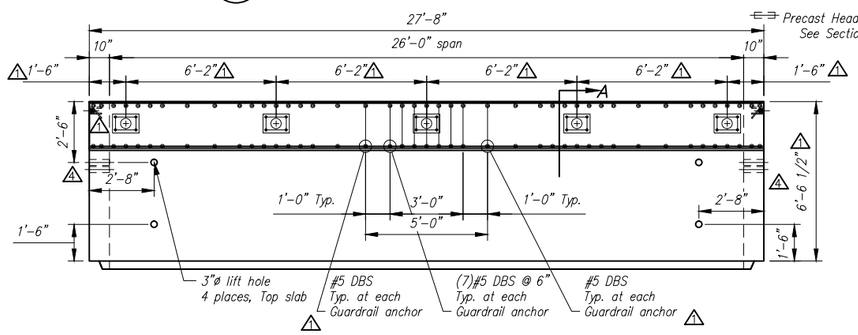

PLAN VIEW

Scale: 1/4" = 1'-0"

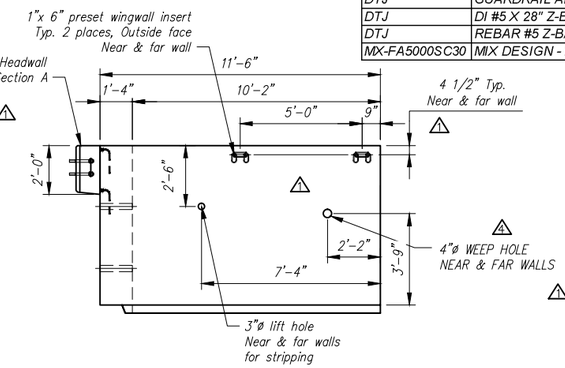

R. SIDE ELEVATION

Scale: 1/4" = 1'-0"

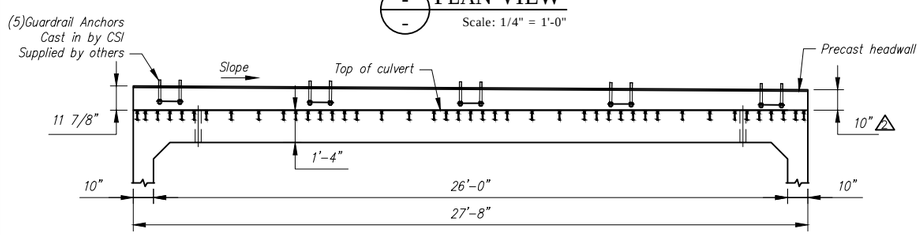

PARTIAL ELEVATION

Scale: 1/4" = 1'-0"

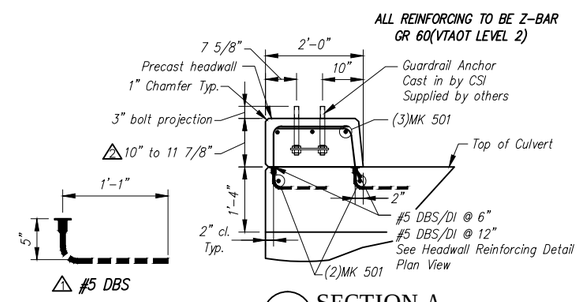

SECTION A

Scale: N.T.S.

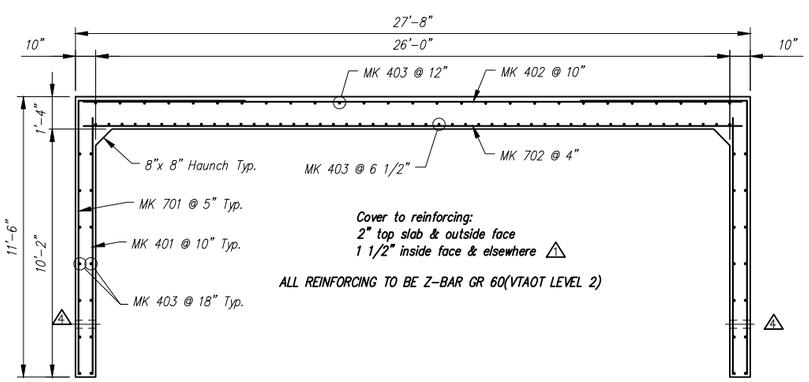

REINFORCING DETAIL

Scale: N.T.S.

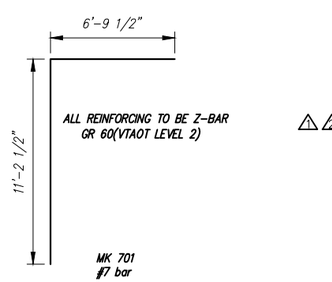

BENDING SCHEDULE

Scale: N.T.S.

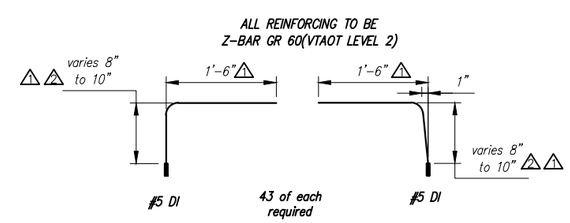

HEADWALL BENDING SCHEDULE

Scale: N.T.S.

Rev.	Date	DESCRIPTION	By
10			
9			
8			
7			
6			
5			
4	17JUN2015	REVISED PER CUSTOMER REVIEW	BSS
3	10JUN2015	ADJUSTED WATER REPELLENT	RY
2	28MAY2015	10" WAS 9 1/2", HDWALL BEND SCHED – 8" WAS 7 1/2"	RY
1	14MAY2015	REVISED PER CUSTOMER REVIEW, REVISED GUARDRAIL ANCHOR SPACING, MOVED WINGWALL ANCHOR, ADDED NOTE	RY

REVISIONS

Contractor is to verify that all information shown on drawings has been thoroughly checked, complies with the contract documents and is adequate to meet the field conditions. Some dimensions and details may differ slightly from contract drawings to accommodate the manufacturing or design process. Approval of this drawing indicates that any deviation from the contract documents has been reviewed and found to be acceptable. Production will not commence until receipt of signed, approved shop drawings.

This drawing contains information proprietary to CONCRETE SYSTEMS, INC. This drawing is disclosed with the understanding that it will be retained in confidence and its use limited solely to the purpose for which it is disclosed. It is understood that no reproduction of this drawing is authorized without permission from CONCRETE SYSTEMS, INC. and that it will be returned to CONCRETE SYSTEMS, INC. upon request.

This drawing is based upon information provided from the following documents and/or sources:

Engineer: STATE OF VT/AOT PROGRAM DEVELOPMENT
Project No: ----
Drawings: STATE OF VT/AOT PROPOSED IMPROVEMENT BRIDGE PROJECT, TOWN OF RICHFORD SHEETS 1,2,4,22,23,24 OF 36
Specifications: STANDARD SPECIFICATIONS FOR CONSTRUCTION DATED 2011
Other: ----

Concrete Systems Inc.
9 Commercial St., Hudson, NH,03051
Phone 603-889-4163
Fax 603-889-2417

STATE AGENCY
VTrans

Drawn By R. YEAGER	Date 16APR2015	
Reviewed By B. KOLAWOLE	Date	
Approved By C. VICK	Date 17JUN2015	

G.W. TATRO CONSTRUCTION, INC.
VT/AOT BRIDGE REPLACEMENT– ROAD IMPROVEMENT
RICHFORD, VT.

C | Drawing No. SHOP DRAWING C1 / C22312–C1 | REV 4

Quantity: 1 | Project No: BRF030229 | SHEET 1 OF 14

QUANTITY = 2
WEIGHT = 30.78 TONS

C2 - BILL OF MATERIALS / EMBEDS				
CSI ID#	DESCRIPTION	QTY	UM	COMMENTS
EM-00033	3" FOAM CORE PVC	7	FT	
JS-00002	1"X1"CLOSED NEOP GASKET	49	FT	AROUND BELL
DTJ	REBAR #4 Z-BAR GR 60 VTAOT LEVEL II	824	LB	
DTJ	REBAR #7 Z-BAR GR 60 VTAOT LEVEL II	2667	LB	
MX-FA5000SC30	MIX DESIGN - FLY ASH 5000 SELF CONSOLIDATING	15.2	CY	

C2 Culvert Rebar Schedule			
MK		QTY	LENGTH
401	#4	20	10 '- 6 "
402	#4	10	27 '- 0 "
403	#4	104	7 '- 3 "
701	#7	38	18 '- 0 "
702	#7	23	27 '- 0 "

△1 Culvert piece length is ½" shorter on shop drawing than on layout drawing. Layout dimension includes joint gap.

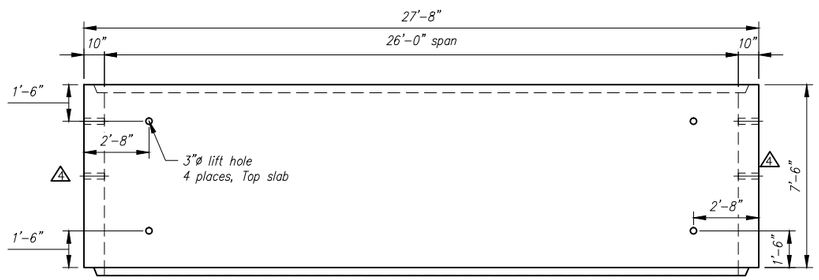

PLAN VIEW
Scale: 1/4" = 1'-0"

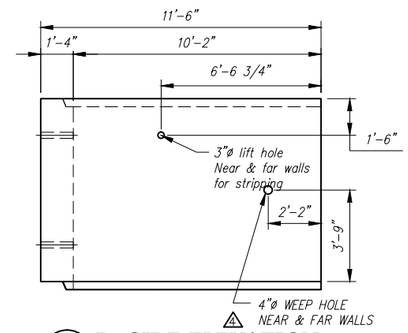

R. SIDE ELEVATION
Scale: 1/4" = 1'-0"

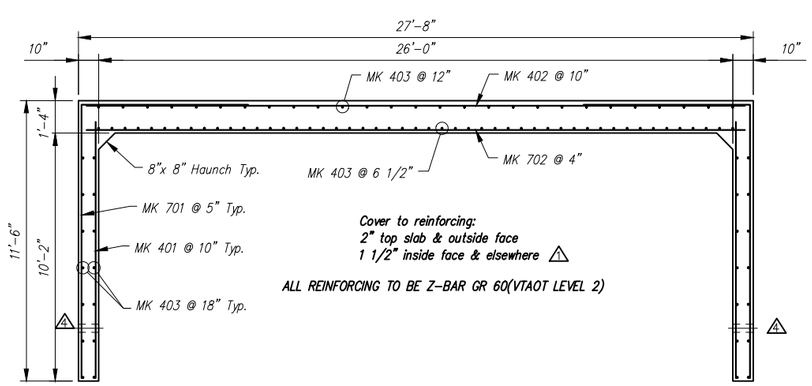

REINFORCING DETAIL
Scale: N.T.S.

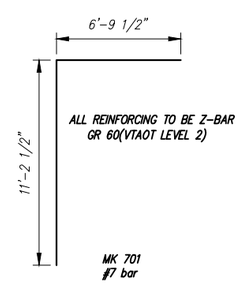

BENDING SCHEDULE
Scale: N.T.S.

Rev.	Date	By	DESCRIPTION
10			
9			
8			
7			
6			
5			
4			
3			
2	17JUN2015	BSS	REVISED PER CUSTOMER REVIEW
1	14MAY2015	RY	REVISED PER CUSTOMER REVIEW, ADDED NOTE

REVISIONS

Contractor is to verify that all information shown on drawings has been thoroughly checked, complies with the contract documents and is adequate to meet the field conditions. Some dimensions and details may differ slightly from contract drawings to accommodate the manufacturing or design process. Approval of this drawing indicates that any deviation from the contract documents has been reviewed and found to be acceptable. Production will not commence until receipt of signed, approved shop drawings.

This drawing contains information proprietary to CONCRETE SYSTEMS, INC. This drawing is disclosed with the understanding that it will be retained in confidence and its use limited solely to the purpose for which it is disclosed. It is understood that no reproduction of this drawing is authorized without permission from CONCRETE SYSTEMS, INC. and that it will be returned to CONCRETE SYSTEMS, INC. upon request.

This drawing is based upon information provided from the following documents and/or sources:

Engineer: STATE OF VT/AOT PROGRAM DEVELOPMENT
Project No: ----
Drawings: STATE OF VT/AOT PROPOSED IMPROVEMENT BRIDGE PROJECT, TOWN OF RICHFORD SHEETS 1,2,4,22,23,24 OF 36
Specifications: STANDARD SPECIFICATIONS FOR CONSTRUCTION DATED 2011

Other: ----

Concrete Systems Inc.
9 Commercial St., Hudson, NH,03051
Phone 603-889-4163
Fax 603-889-2417

STATE AGENCY
VTrans

Drawn By R. YEAGER	Date 16APR2015	C	SHOP DRAWING C2
Reviewed By B. KOLAWOLE	Date		Drawing No. C22312-C2
Approved By C. VICK	Date 17JUN2015	Quantity: 2	Project No: BRF030229

REV 2

SHEET 2 OF 14

G.W. TATRO CONSTRUCTION, INC.
VT/AOT BRIDGE REPLACEMENT– ROAD IMPROVEMENT
RICHFORD, VT.

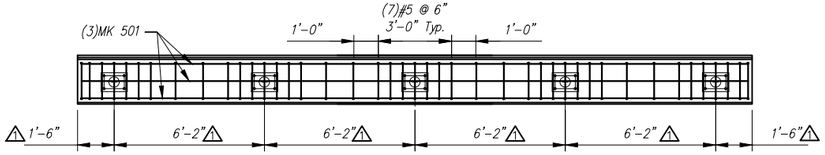

Typical Layout at each Guardrail Anchor
See Section A

PLAN VIEW
HEADWALL REINFORCING DETAIL

Scale: 1/4" = 1'-0"

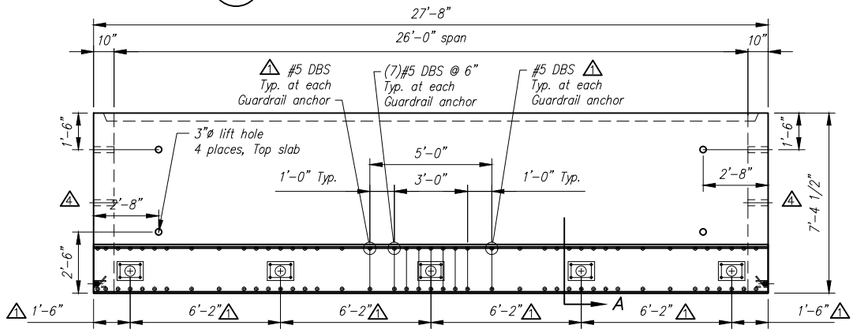

PLAN VIEW

Scale: 1/4" = 1'-0"

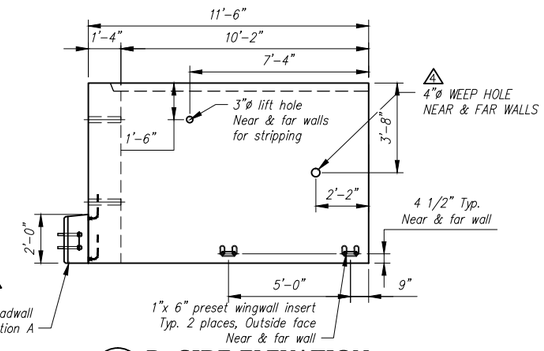

R. SIDE ELEVATION

Scale: 1/4" = 1'-0"

C3 Culvert Rebar Schedule			
MK		QTY	LENGTH
401	#4	18	10 '- 6 "
402	#4	9	27 '- 0 "
403	#4	104	7 '- 1.5 "
501	#5	2	27 '- 4 "
701	#7	36	18 '- 0 "
702	#7	22	27 '- 0 "

C3 HW Rebar Schedule			
MK		QTY	LENGTH
501	#5	3	27 '- 4 "

QUANTITY = 1
WEIGHT = 33.41 TONS

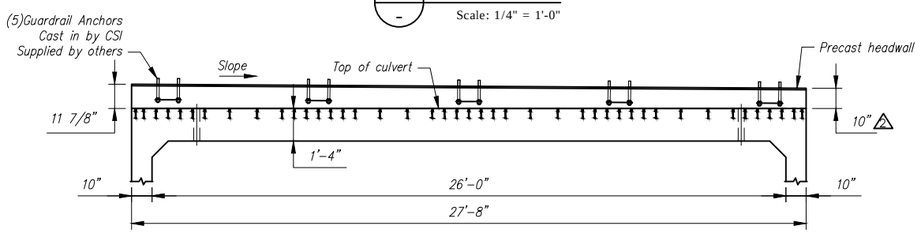

PARTIAL ELEVATION

Scale: 1/4" = 1'-0"

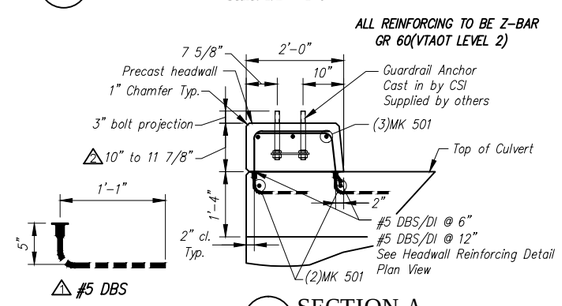

SECTION A

Scale: N.T.S.

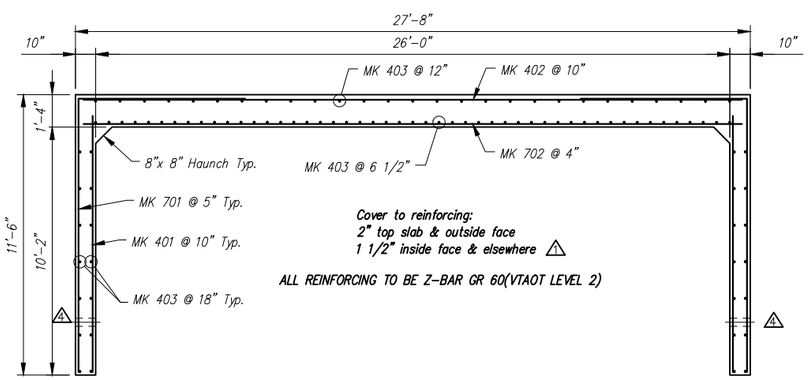

REINFORCING DETAIL

Scale: N.T.S.

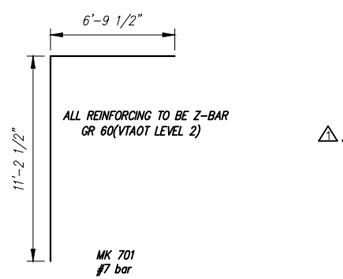

BENDING SCHEDULE

Scale: N.T.S.

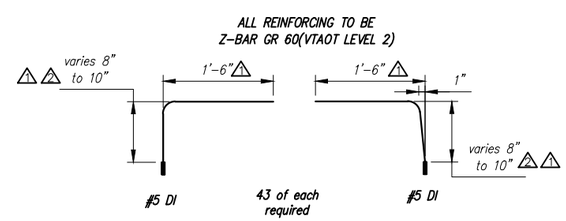

HEADWALL
BENDING SCHEDULE

Scale: N.T.S.

C3 - BILL OF MATERIALS / EMBEDS				
CSI ID#	DESCRIPTION	QTY	UM	COMMENTS
DTJ	CERTI-VEX PENSEAL 244-40%	1.30	GA	
EM-0005A	1" X 6 " PRESET WING INSERTS	4	EA	
EM-00033	3" FOAM CORE PVC	7	FT	
JS-00002	1"X1"CLOSED NEOP GASKET	49	FT	AROUND BELL
DTJ	DBSAE #5 Z-BAR GR 60 VTAOT LEVEL II	86	EA	DOWEL BAR SPLICER
DTJ	REBAR #4 Z-BAR GR 60 VTAOT LEVEL II	784	LB	
DTJ	REBAR #5 Z-BAR GR 60 VTAOT LEVEL II	57	LB	
DTJ	REBAR #7 Z-BAR GR 60 VTAOT LEVEL II	2539	LB	
MX-FA5000SC30	MIX DESIGN - FLY ASH 5000 SELF CONSOLIDATING	14.72	CY	
C3 HEADWALL - BILL OF MATERIALS / EMBEDS				
DTJ	GUARDRAIL ANCHOR	5	EA	SUPPLIED BY OTHERS
DTJ	DI #5 X 28" Z-BAR GR 60 VTAOT LEVEL II	86	EA	DOWEL IN
DTJ	REBAR #5 Z-BAR GR 60 VTAOT LEVEL II	86	LB	
MX-FA5000SC30	MIX DESIGN - FLY ASH 5000 SELF CONSOLIDATING	1.78	CY	

Rev.	Date	DESCRIPTION	By
10			
9			
8			
7			
6			
5			
4	17JUN2015	REVISED PER CUSTOMER REVIEW	BSS
3	10JUN2015	ADJUSTED WATER REPELLENT	RY
2	28MAY2015	10" DIM WAS 9 1/2", HDWALL BEND SCHED – 8" WAS 7 1/2"	RY
1	14MAY2015	REVISED PER CUSTOMER REVIEW, REVISED GUARDRAIL ANCHOR SPACING, MOVED WINGWALL ANCHOR, ADDED NOTE	RY

REVISIONS

Contractor is to verify that all information shown on drawings has been thoroughly checked, complies with the contract documents and is adequate to meet the field conditions. Some dimensions and details may differ slightly from contract drawings to accommodate the manufacturing or design process. Approval of this drawing indicates that any deviation from the contract documents has been reviewed and found to be acceptable. Production will not commence until receipt of signed, approved shop drawings.

This drawing contains information proprietary to CONCRETE SYSTEMS, INC. This drawing is disclosed with the understanding that it will be retained in confidence and its use limited solely to the purpose for which it is disclosed. It is understood that no reproduction of this drawing is authorized without permission from CONCRETE SYSTEMS, INC. and that it will be returned to CONCRETE SYSTEMS, INC. upon request.

This drawing is based upon information provided from the following documents and/or sources:

Engineer: STATE OF VT/AOT PROGRAM DEVELOPMENT
Project No: ----
Drawings: STATE OF VT/AOT PROPOSED IMPROVEMENT BRIDGE PROJECT, TOWN OF RICHFORD SHEETS 1,2,4,22,23,24 OF 36
Specifications: STANDARD SPECIFICATIONS FOR CONSTRUCTION DATED 2011
Other: ----

Concrete Systems Inc.
9 Commercial St., Hudson, NH,03051
Phone 603-889-4163
Fax 603-889-2417

STATE AGENCY
VTrans

Drawn By: R. YEAGER	Date: 16APR2015	G.W. TATRO CONSTRUCTION, INC. VT/AOT BRIDGE REPLACEMENT– ROAD IMPROVEMENT RICHFORD, VT.	
Reviewed By: B. KOLAWOLE	Date:	C — Drawing No.: SHOP DRAWING C3 / C22312–C3	REV 4
Approved By: C. VICK	Date: 17JUN2015	Quantity: 1 — Project No: BRF030229	SHEET 3 OF 14

QUANTITY = 1
WEIGHT = 15.73 TONS △2

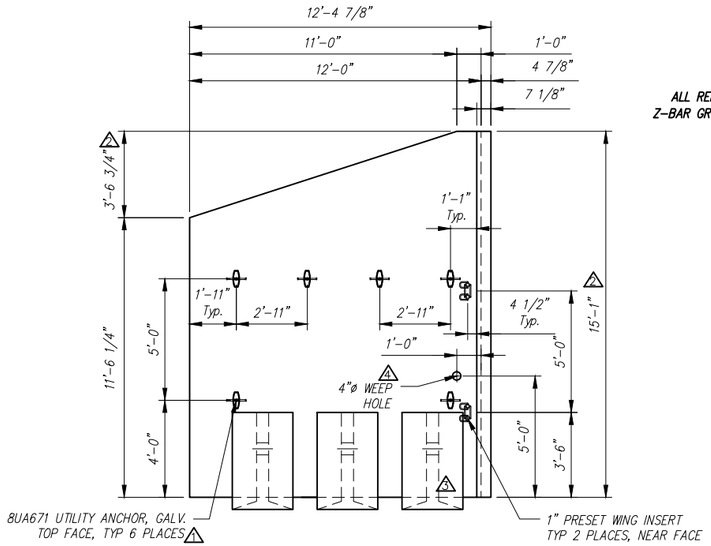

ALL REINFORCING TO BE Z-BAR GR 60(VTAOT LEVEL 2)

PLAN VIEW
Scale: 1/4" = 1'-0"

ALL EXPOSED EDGES OF CONCRETE TO RECEIVE △1 1" CHAMFER

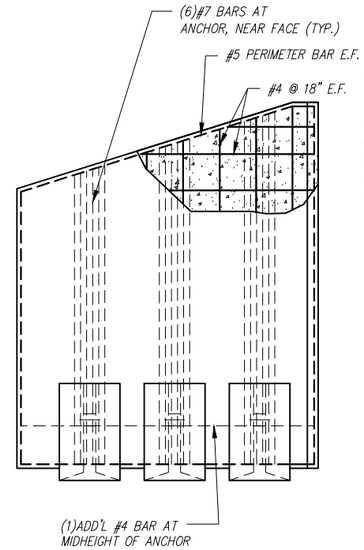

REINFORCING DETAIL
Scale: 1/4" = 1'-0"

WW1 - BILL OF MATERIALS / EMBEDS

	CSI ID#	DESCRIPTION	QTY	UM	COMMENTS
	CSANC-E	CON/SPAN WINGWALL ANCHOR (E)	3	EA	
△2	DTJ	CERTI-VEX PENSEAL 244-40%	1.20	GA	
	EM-00034	4" FOAM CORE PVC	1	FT	
	EM-0005A	1" X 6 " PRESET WING INSERT	2	EA	
△1	EM-00115	UTILITY ANCHOR #8UA671-GALVANIZED	6	EA	
△2	DTJ	REBAR #4 Z-BAR GR 60 VTAOT LEVEL II	335	LB	
△2	DTJ	REBAR #5 Z-BAR GR 60 VTAOT LEVEL II	106	LB	
△2	DTJ	REBAR #7 Z-BAR GR 60 VTAOT LEVEL II	533	LB	
△2	MX-FA5000SC30	MIX DESIGN - FLY ASH 5000 SELF CONSOLIDATING	6.06	CY	

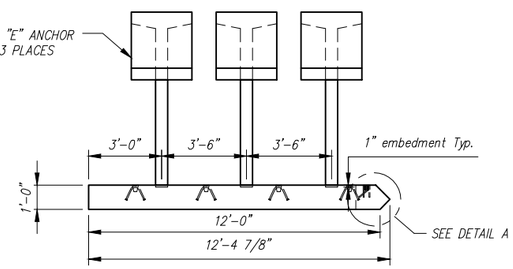

FRONT ELEVATION
Scale: 1/4" = 1'-0"

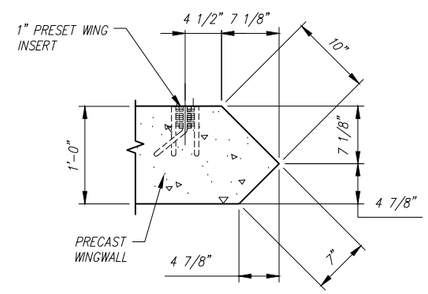

DETAIL A
Scale: N.T.S.

Rev.	Date	DESCRIPTION	By
10			
9			
8			
7			
6			
5			
4	17JUN2015	REVISED PER CUSTOMER REVIEW	BSS
3	10JUN2015	MOVED WEEP HOLE TO 1'	RY
2	28MAY2015	15'-1 WAS 14'-8", VARIOUS CHANGES	RY
1	14MAY2015	REVISED PER CUSTOMER REVIEW	RY

REVISIONS

Contractor is to verify that all information shown on drawings has been thoroughly checked, complies with the contract documents and is adequate to meet the field conditions. Some dimensions and details may differ slightly from contract drawings to accommodate the manufacturing or design process. Approval of this drawing indicates that any deviation from the contract documents has been reviewed and found to be acceptable. Production will not commence until receipt of signed, approved shop drawings.

This drawing contains information proprietary to CONCRETE SYSTEMS, INC. This drawing is disclosed with the understanding that it will be retained in confidence and its use limited solely to the purpose for which it is disclosed. It is understood that no reproduction of this drawing is authorized without permission from CONCRETE SYSTEMS, INC. and that it will be returned to CONCRETE SYSTEMS, INC. upon request.

This drawing is based upon information provided from the following documents and/or sources:

Engineer: STATE OF VT/AOT PROGRAM DEVELOPMENT
Project No: ----
Drawings: STATE OF VT/AOT PROPOSED IMPROVEMENT BRIDGE PROJECT, TOWN OF RICHFORD SHEETS 1,2,4,22,23,24 OF 36
Specifications: STANDARD SPECIFICATIONS FOR CONSTRUCTION DATED 2011
Other: ----

Concrete Systems Inc.
9 Commercial St., Hudson, NH,03051
Phone 603-889-4163
Fax 603-889-2417

STATE AGENCY
VTrans

Drawn By B. SKELTON/RY	Date 17APR2015	
Reviewed By B. KOLAWOLE	Date	
Approved By C. VICK	Date 17JUN2015	

G.W. TATRO CONSTRUCTION, INC.
VT/AOT BRIDGE REPLACEMENT– ROAD IMPROVEMENT
RICHFORD, VT.

C — SHOP DRAWING WW1 — Drawing No. C22312–WW1 — REV 4

Quantity: 1 | Project No: BRF030229 | SHEET 4 OF 14

QUANTITY = 1
WEIGHT = 12.86 TONS 2

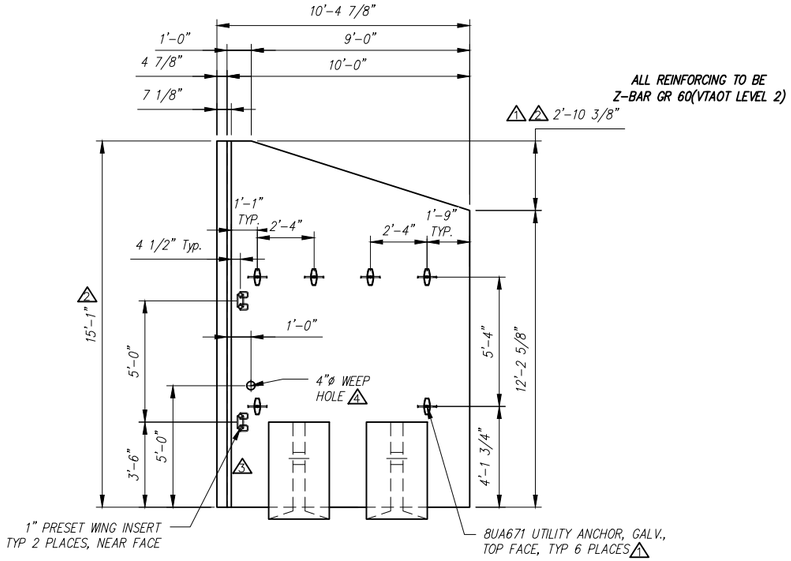

PLAN VIEW
Scale: 1/4" = 1'-0"

ALL EXPOSED EDGES OF CONCRETE TO RECEIVE 1 1" CHAMFER

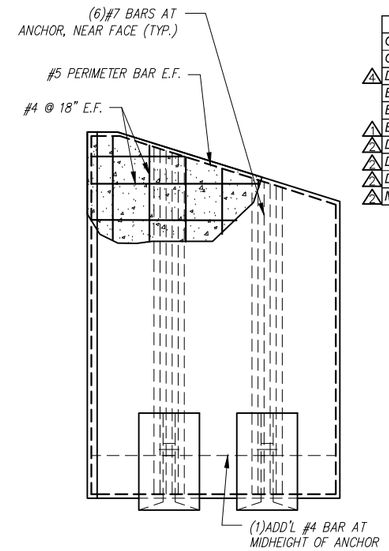

REINFORCING DETAIL
Scale: 1/4" = 1'-0"

WW2 - BILL OF MATERIALS / EMBEDS

	CSI ID#	DESCRIPTION	QTY	UM	COMMENTS
	CSANC-E	CON/SPAN WINGWALL ANCHOR (E)	2	EA	
4	DTJ	CERTI-VEX PENSEAL 244-40%	1.10	GA	
	EM-00034	4" FOAM CORE PVC	1	FT	
	EM-0005A	1" X 6 " PRESET WING INSERT	2	EA	
1	EM-00115	UTILITY ANCHOR #8UA671-GALVANIZED	6	EA	
2	DTJ	REBAR #4 Z-BAR GR 60 VTAOT LEVEL II	286	LB	
2	DTJ	REBAR #5 Z-BAR GR 60 VTAOT LEVEL II	99	LB	
2	DTJ	REBAR #7 Z-BAR GR 60 VTAOT LEVEL II	350	LB	
3	MX-FA5000SC30	MIX DESIGN - FLY ASH 5000 SELF CONSOLIDATING	5.21	CY	

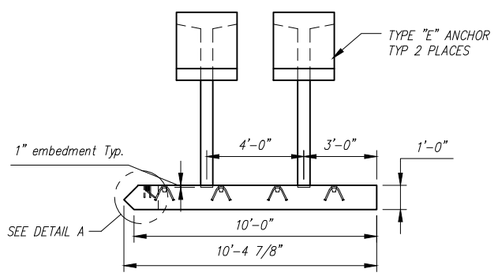

FRONT ELEVATION
Scale: 1/4" = 1'-0"

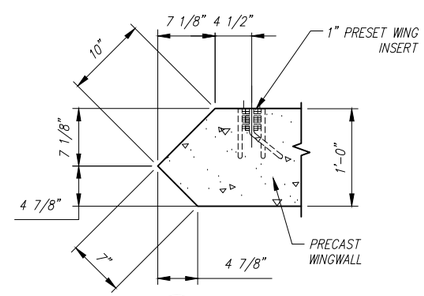

DETAIL A
Scale: N.T.S.

Rev.	Date	By	DESCRIPTION
10			
9			
8			
7			
6			
5			
4	17JUN2015	BSS	REVISED PER CUSTOMER REVIEW
3	10JUN2015	RY	MOVED WEEP HOLE TO 1'
2	28MAY2015	RY	15'-1" WAS 14'-8", VARIOUS CHANGES
1	14MAY2015	RY	REVISED PER CUSTOMER REVIEW

REVISIONS

Contractor is to verify that all information shown on drawings has been thoroughly checked, complies with the contract documents and is adequate to meet the field conditions. Some dimensions and details may differ slightly from contract drawings to accommodate the manufacturing or design process. Approval of this drawing indicates that any deviation from the contract documents has been reviewed and found to be acceptable. Production will not commence until receipt of signed, approved shop drawings.

This drawing contains information proprietary to CONCRETE SYSTEMS, INC. This drawing is disclosed with the understanding that it will be retained in confidence and its use limited solely to the purpose for which it is disclosed. It is understood that no reproduction of this drawing is authorized without permission from CONCRETE SYSTEMS, INC. and that it will be returned to CONCRETE SYSTEMS, INC. upon request.

This drawing is based upon information provided from the following documents and/or sources:

Engineer: STATE OF VT/AOT PROGRAM DEVELOPMENT
Project No: ----
Drawings: STATE OF VT/AOT PROPOSED IMPROVEMENT BRIDGE PROJECT, TOWN OF RICHFORD SHEETS 1,2,4,22,23,24 OF 36
Specifications: STANDARD SPECIFICATIONS FOR CONSTRUCTION DATED 2011

Other: ----

Concrete Systems Inc.
9 Commercial St., Hudson, NH,03051
Phone 603-889-4163
Fax 603-889-2417

STATE AGENCY
VTrans

Drawn By B. SKELTON/RY	Date 17APR2015	
Reviewed By B. KOLAWOLE	Date	
Approved By C. VICK	Date 17JUN2015	

G.W. TATRO CONSTRUCTION, INC.
VT/AOT BRIDGE REPLACEMENT– ROAD IMPROVEMENT
RICHFORD, VT.

C — SHOP DRAWING WW2 — Drawing No. C22312–WW2 — REV 4

Quantity: 1 — Project No: BRF030229 — SHEET 5 OF 14

QUANTITY = 1
WEIGHT = 12.21 TONS 2

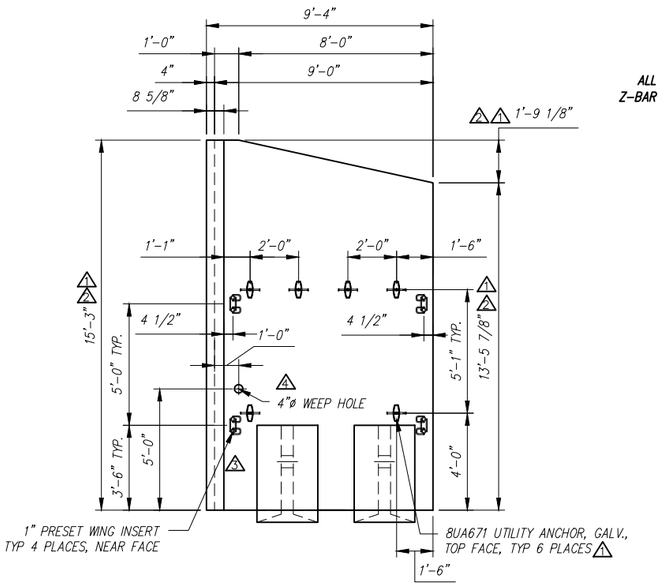

ALL REINFORCING TO BE
Z-BAR GR 60(VTAOT LEVEL 2)

PLAN VIEW
Scale: 1/4" = 1'-0"

ALL EXPOSED EDGES OF
CONCRETE TO RECEIVE
1" CHAMFER

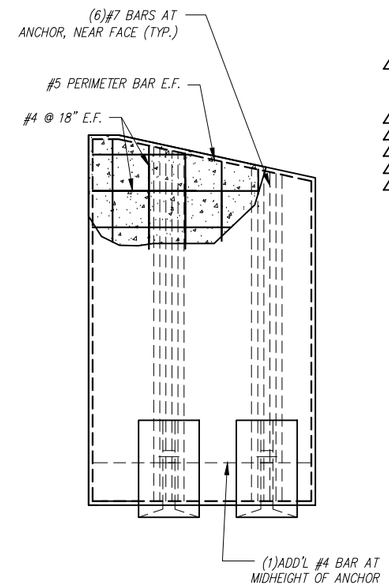

REINFORCING DETAIL
Scale: 1/4" = 1'-0"

WW3A - BILL OF MATERIALS / EMBEDS					
	CSI ID#	DESCRIPTION	QTY	UM	COMMENTS
	CSANC-E	CON/SPAN WINGWALL ANCHOR (E)	2	EA	
4	DTJ	CERTI-VEX PENSEAL 244-40%	1.00	GA	
	EM-00034	4" FOAM CORE PVC	1	FT	
	EM-0005A	1" X 6 " PRESET WING INSERT	4	EA	
1	EM-00115	UTILITY ANCHOR #8UA671-GALVANIZED	6	EA	
2	DTJ	REBAR #4 Z-BAR GR 60 VTAOT LEVEL II	252	LB	
2	DTJ	REBAR #5 Z-BAR GR 60 VTAOT LEVEL II	96	LB	
2	DTJ	REBAR #7 Z-BAR GR 60 VTAOT LEVEL II	358	LB	
2	MX-FA5000SC30	MIX DESIGN - FLY ASH 5000 SELF CONSOLIDATING	4.89	CY	

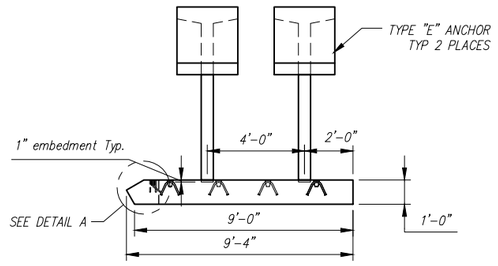

FRONT ELEVATION
Scale: 1/4" = 1'-0"

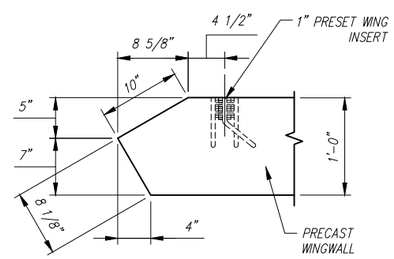

DETAIL A
Scale: N.T.S.

Rev.	Date	By	DESCRIPTION
10			
9			
8			
7			
6			
5			
4	17JUN2015	BSS	REVISED PER CUSTOMER REVIEW
3	10JUN2015	RY	MOVED WEEP HOLE TO 1'
2	28MAY2015	RY	15'-3" WAS 14'-10 3/8", 13'-5 7/8" WAS 13'-3 3/8", VARIOUS CHANGES
1	14MAY2015	RY	REVISED PER CUSTOMER REVIEW

REVISIONS

Contractor is to verify that all information shown on drawings has been thoroughly checked, complies with the contract documents and is adequate to meet the field conditions. Some dimensions and details may differ slightly from contract drawings to accommodate the manufacturing or design process. Approval of this drawing indicates that any deviation from the contract documents has been reviewed and found to be acceptable. Production will not commence until receipt of signed, approved shop drawings.

This drawing contains information proprietary to CONCRETE SYSTEMS, INC. This drawing is disclosed with the understanding that it will be retained in confidence and its use limited solely to the purpose for which it is disclosed. It is understood that no reproduction of this drawing is authorized without permission from CONCRETE SYSTEMS, INC. and that it will be returned to CONCRETE SYSTEMS, INC. upon request.

This drawing is based upon information provided from the following documents and/or sources:

Engineer: STATE OF VT/AOT PROGRAM DEVELOPMENT
Project No: ----
Drawings: STATE OF VT/AOT PROPOSED IMPROVEMENT BRIDGE PROJECT, TOWN OF RICHFORD SHEETS 1,2,4,22,23,24 OF 36
Specifications: STANDARD SPECIFICATIONS FOR CONSTRUCTION DATED 2011

Other: ----

Concrete Systems Inc.
9 Commercial St., Hudson, NH,03051
Phone 603-889-4163
Fax 603-889-2417

STATE AGENCY
VTrans

Drawn By B. SKELTON/RY	Date 17APR2015	
Reviewed By B. KOLAWOLE	Date	
Approved By C. VICK	Date 17JUN2015	

G.W. TATRO CONSTRUCTION, INC.
VT/AOT BRIDGE REPLACEMENT– ROAD IMPROVEMENT
RICHFORD, VT.

C | Drawing No. SHOP DRAWING WW3A / C22312–WW3A | REV 4

Quantity: 1 | Project No: BRF030229 | SHEET 6 OF 14

QUANTITY = 1
WEIGHT = 10.75 TONS △

WW3B - BILL OF MATERIALS / EMBEDS				
CSI ID#	DESCRIPTION	QTY	UM	COMMENTS
CSANC-E	CON/SPAN WINGWALL ANCHOR (E)	2	EA	
△1 DTJ	CERTI-VEX PENSEAL 244-40%	1.00	GA	
EM-00034	4" FOAM CORE PVC	1	FT	
EM-0005A	1" X 6 " PRESET WING INSERT	2	EA	
△2 EM-00115	UTILITY ANCHOR #8UA671-GALVANIZED	6	EA	
DTJ	REBAR #4 Z-BAR GR 60 VTAOT LEVEL II	208	LB	
DTJ	REBAR #5 Z-BAR GR 60 VTAOT LEVEL II	87	LB	
DTJ	REBAR #7 Z-BAR GR 60 VTAOT LEVEL II	315	LB	
MX-FA5000SC30	MIX DESIGN - FLY ASH 5000 SELF CONSOLIDATING	4.17	CY	

ALL REINFORCING TO BE Z-BAR GR 60(VTAOT LEVEL 2)

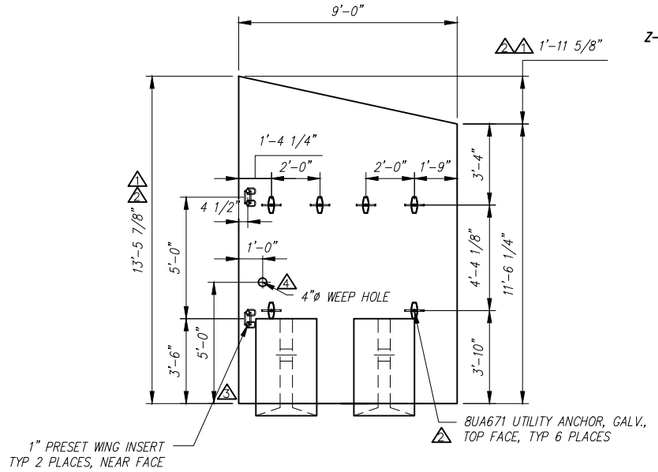

PLAN VIEW
Scale: 1/4" = 1'-0"

ALL EXPOSED EDGES OF CONCRETE TO RECEIVE △1 1" CHAMFER

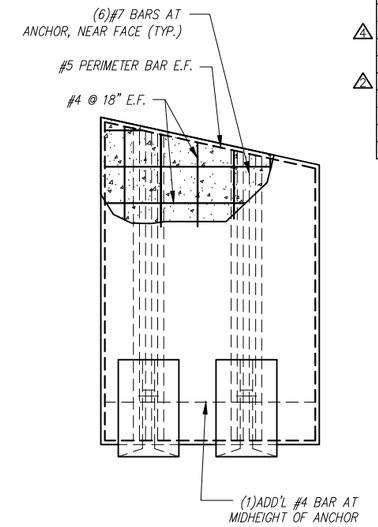

REINFORCING DETAIL
Scale: 1/4" = 1'-0"

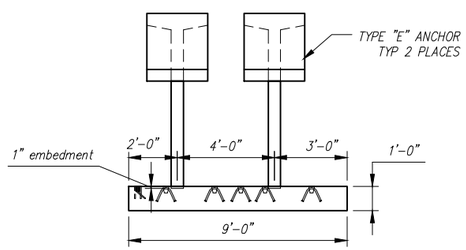

FRONT ELEVATION
Scale: 1/4" = 1'-0"

Rev.	Date	DESCRIPTION	By
10			
9			
8			
7			
6			
5			
4	17JUN2015	REVISED PER CUSTOMER REVIEW	BSS
3	10JUN2015	ADDED WEEP HOLE	RY
2	04JUN2015	REVISED PER CUTOMER REVIEW	RY
1	14MAY2015	REVISED PER CUSTOMER REVIEW	RY

REVISIONS

Contractor is to verify that all information shown on drawings has been thoroughly checked, complies with the contract documents and is adequate to meet the field conditions. Some dimensions and details may differ slightly from contract drawings to accommodate the manufacturing or design process. Approval of this drawing indicates that any deviation from the contract documents has been reviewed and found to be acceptable. Production will not commence until receipt of signed, approved shop drawings.

This drawing contains information proprietary to CONCRETE SYSTEMS, INC. This drawing is disclosed with the understanding that it will be retained in confidence and its use limited solely to the purpose for which it is disclosed. It is understood that no reproduction of this drawing is authorized without permission from CONCRETE SYSTEMS, INC. and that it will be returned to CONCRETE SYSTEMS, INC. upon request.

This drawing is based upon information provided from the following documents and/or sources:

Engineer: STATE OF VT/AOT PROGRAM DEVELOPMENT
Project No: ----
Drawings: STATE OF VT/AOT PROPOSED IMPROVEMENT BRIDGE PROJECT, TOWN OF RICHFORD SHEETS 1,2,4,22,23,24 OF 36
Specifications: STANDARD SPECIFICATIONS FOR CONSTRUCTION DATED 2011

Other: ----

Concrete Systems Inc.
9 Commercial St., Hudson, NH,03051
Phone 603-889-4163
Fax 603-889-2417

STATE AGENCY
VTrans

Drawn By B. SKELTON/RY	Date 17APR2015	
Reviewed By B. KOLAWOLE	Date	
Approved By C. VICK	Date 17JUN2015	

G.W. TATRO CONSTRUCTION, INC.
VT/AOT BRIDGE REPLACEMENT– ROAD IMPROVEMENT
RICHFORD, VT.

C | SHOP DRAWING WW3B | REV 4
Drawing No. C22312–WW3B
Quantity: 1 | Project No: BRF030229 | SHEET 7 OF 14

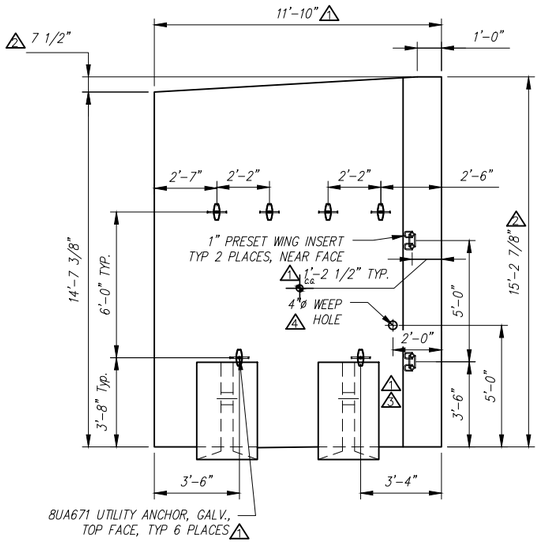

PLAN VIEW

Scale: 1/4" = 1'-0"

ALL REINFORCING TO BE Z-BAR GR 60(VTAOT LEVEL 2)

ALL EXPOSED EDGES OF CONCRETE TO RECEIVE 1" CHAMFER

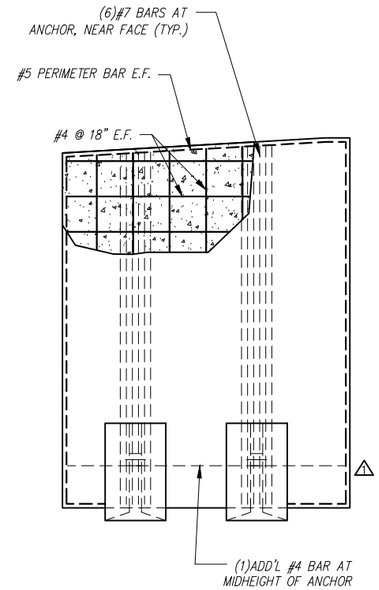

REINFORCING DETAIL

Scale: 1/4" = 1'-0"

QUANTITY = 1

WEIGHT = 16.47 TONS

	WW4 - BILL OF MATERIALS / EMBEDS				
	CSI ID#	DESCRIPTION	QTY	UM	COMMENTS
	CSANC-E	CONVSPAN WINGWALL ANCHOR (E)	2	EA	
	DTJ	CERTI-VEX PENSEAL 244-40%	1.20	GA	
	EM-00034	4" FOAM CORE PVC	1	FT	
	EM-0005A	1" X 6 " PRESET WING INSERT	2	EA	
	EM-00115	UTILITY ANCHOR #8UA671-GALVANIZED	6	EA	
	DTJ	REBAR #4 Z-BAR GR 60 VTAOT LEVEL II	305	LB	
	DTJ	REBAR #5 Z-BAR GR 60 VTAOT LEVEL II	108	LB	
	DTJ	REBAR #7 Z-BAR GR 60 VTAOT LEVEL II	356	LB	
	MX-FA5000SC30	MIX DESIGN - FLY ASH 5000 SELF CONSOLIDATING	6.99	CY	

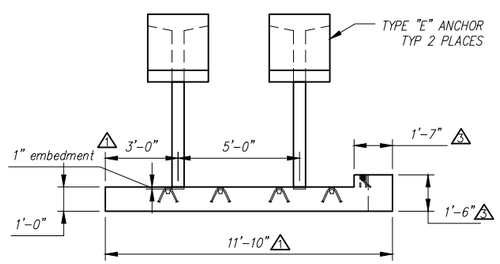

FRONT ELEVATION

Scale: 1/4" = 1'-0"

Rev.	Date	DESCRIPTION	By
10			
9			
8			
7			
6			
5			
4	17JUN2015	REVISED PER CUSTOMER REVIEW	BSS
3	10JUN2015	ADDED 6" STANDOFF	RY
2	04JUN2015	REVISED PER CUSTOMER REVIEW	RY
1	14MAY2015	REVISED PER CUSTOMER REVIEW	RY

REVISIONS

Contractor is to verify that all information shown on drawings has been thoroughly checked, complies with the contract documents and is adequate to meet the field conditions. Some dimensions and details may differ slightly from contract drawings to accommodate the manufacturing or design process. Approval of this drawing indicates that any deviation from the contract documents has been reviewed and found to be acceptable. Production will not commence until receipt of signed, approved shop drawings.

This drawing contains information proprietary to CONCRETE SYSTEMS, INC. This drawing is disclosed with the understanding that it will be retained in confidence and its use limited solely to the purpose for which it is disclosed. It is understood that no reproduction of this drawing is authorized without permission from CONCRETE SYSTEMS, INC. and that it will be returned to CONCRETE SYSTEMS, INC. upon request.

This drawing is based upon information provided from the following documents and/or sources:

Engineer: STATE OF VT/AOT PROGRAM DEVELOPMENT
Project No: ----
Drawings: STATE OF VT/AOT PROPOSED IMPROVEMENT BRIDGE PROJECT, TOWN OF RICHFORD SHEETS 1,2,4,22,23,24 OF 36
Specifications: STANDARD SPECIFICATIONS FOR CONSTRUCTION DATED 2011
Other: ----

Concrete Systems Inc.
9 Commercial St., Hudson, NH,03051
Phone 603-889-4163
Fax 603-889-2417

STATE AGENCY

Drawn By B. SKELTON/RY	Date 17APR2015	
Reviewed By B. KOLAWOLE	Date	
Approved By C. VICK	Date 17JUN2015	

G.W. TATRO CONSTRUCTION, INC.
VT/AOT BRIDGE REPLACEMENT– ROAD IMPROVEMENT
RICHFORD, VT.

C — SHOP DRAWING WW4 — Drawing No. C22312–WW4 — REV 4

Quantity: 1 — Project No: BRF030229 — SHEET 8 OF 14

QUANTITY = 1
WEIGHT = 23.02 TONS

FOOTING SLAB - F1 - BILL OF MATERIALS / EMBEDS				
CSI ID#	DESCRIPTION	QTY	UM	COMMENTS
EM-00078	8T SPREAD ANCHOR #FL119/P94	4	EA	
EM-00125	BOLT POCKET PLATE (GALVANIZED)	2	EA	
RM-00013	REBAR #4 BLACK- GR 60	424	LB	
RM-00015	REBAR #5 BLACK-GR 60 40'	264	LB	
RM-00017	REBAR #6 BLACK-GR 60 40'	128	LB	
MX-FA5000SC30	MIX DESIGN - FLY ASH 5000 SELF CONSOLIDATING	9.11	CY	
FOOTING PEDESTAL - F1 - BILL OF MATERIALS / EMBEDS				
RM-00013	REBAR #4 BLACK- GR 60	104	LB	
MX-FA5000SC30	MIX DESIGN - FLY ASH 5000 SELF CONSOLIDATING	2.26	CY	

Ftg. Slab - F1 Rebar Schedule				
MK		QTY	LENGTH	
401	#4	26	12 '- 0 "	
402	#4	26	10 '- 9 "	MAX
405	#4	4	10 '- 8 "	
501	#5	40	6 '- 4 "	
601	#6	6	14 '- 3 "	MAX

Ftg. Pedestal-F1 Rebar Schedule			
MK		QTY	LENGTH
402	#4	17	8 '- 3 "
403	#4	9	1 '- 8 "

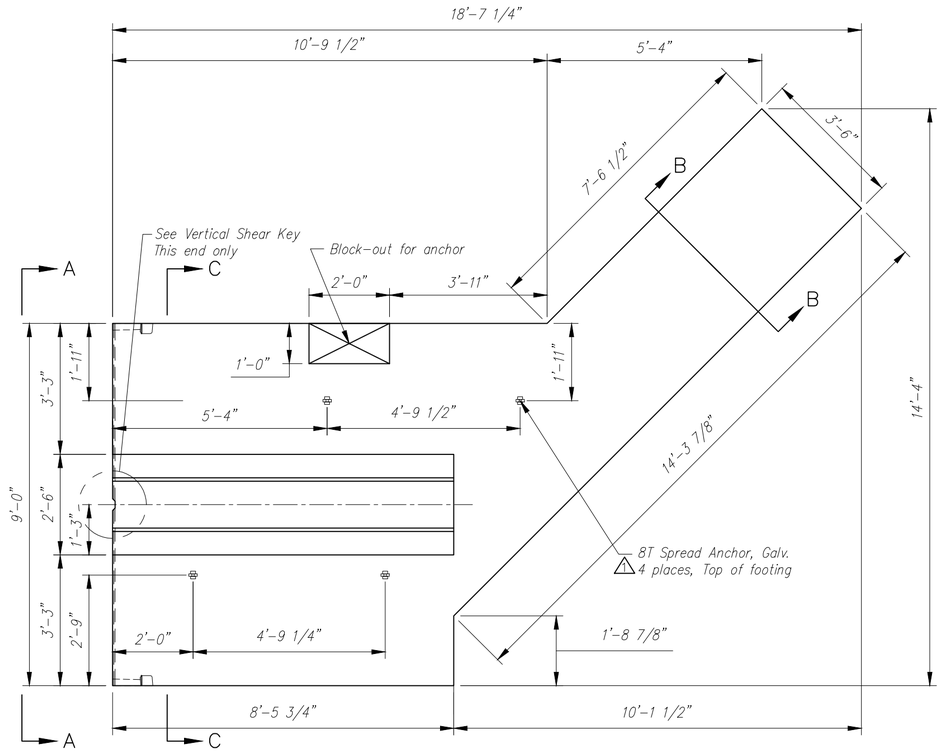

PLAN VIEW
Scale: 3/8" = 1'-0"

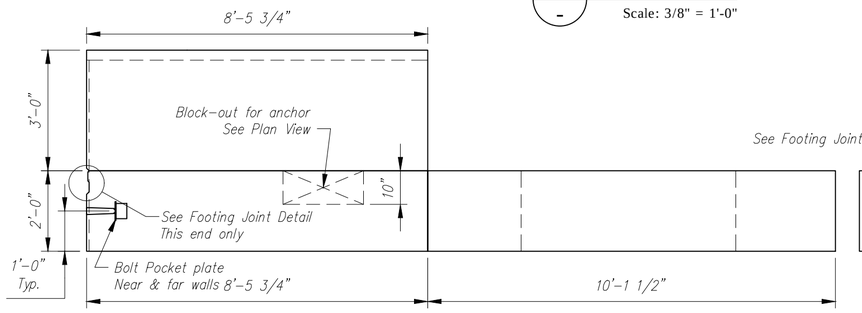

ELEVATION
Scale: 3/8" = 1'-0"

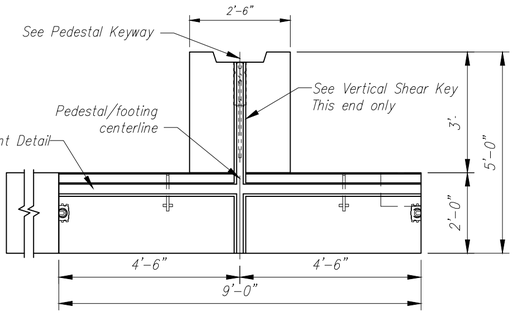

ELEVATION A-A
Scale: 3/8" = 1'-0"

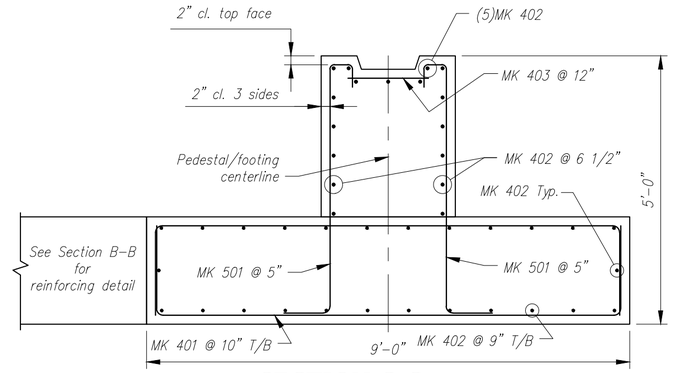

SECTION C-C
REINFORCING DETAIL
Scale: N.T.S.

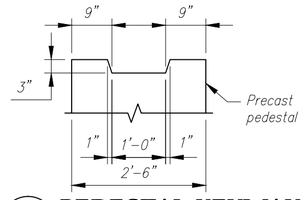

PEDESTAL KEYWAY
Scale: N.T.S.

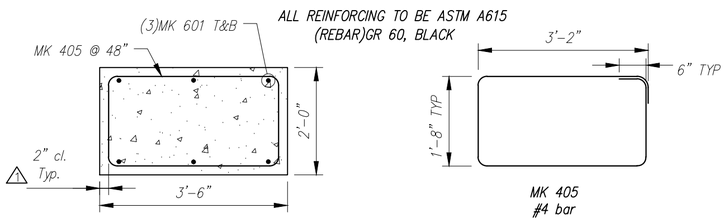

SECTION B-B
REINFORCING DETAIL
Scale: N.T.S.

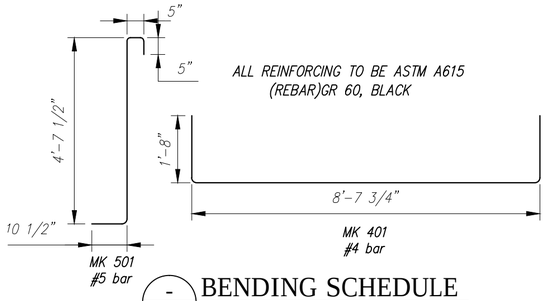

BENDING SCHEDULE
Scale: N.T.S.

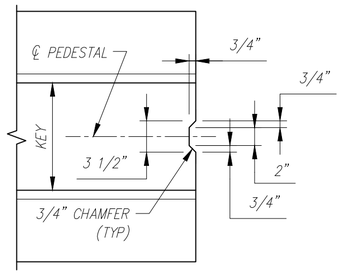

VERTICAL SHEAR KEY
Scale: N.T.S.

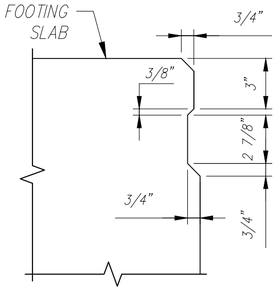

JOINT DETAIL
Scale: N.T.S.

Rev.	Date	DESCRIPTION	By
1	14MAY2015	REVISED PER CUSTOMER REVIEW, REVISED ANCHOR LOCATIONS	RY
2			
3			
4			
5			
6			
7			
8			
9			
10			

REVISIONS

Contractor is to verify that all information shown on drawings has been thoroughly checked, complies with the contract documents and is adequate to meet the field conditions. Some dimensions and details may differ slightly from contract drawings to accommodate the manufacturing or design process. Approval of this drawing indicates that any deviation from the contract documents has been reviewed and found to be acceptable. Production will not commence until receipt of signed, approved shop drawings.

This drawing contains information proprietary to CONCRETE SYSTEMS, INC. This drawing is disclosed with the understanding that it will be retained in confidence and its use limited solely to the purpose for which it is disclosed. It is understood that no reproduction of this drawing is authorized without permission from CONCRETE SYSTEMS, INC. and that it will be returned to CONCRETE SYSTEMS, INC. upon request.

This drawing is based upon information provided from the following documents and/or sources:

Engineer: STATE OF VT/AOT PROGRAM DEVELOPMENT
Project No: ----
Drawings: STATE OF VT/AOT PROPOSED IMPROVEMENT BRIDGE PROJECT, TOWN OF RICHFORD SHEETS 1,2,4,22,23,24 OF 36
Specifications: STANDARD SPECIFICATIONS FOR CONSTRUCTION DATED 2011
Other: ----

Concrete Systems Inc.
9 Commercial St., Hudson, NH,03051
Phone 603-889-4163
Fax 603-889-2417

STATE AGENCY
VTrans

Drawn By R. YEAGER	Date 16APR2015	
Reviewed By B. KOLAWOLE	Date	
Approved By C. VICK	Date 17JUN2015	

G.W. TATRO CONSTRUCTION, INC.
VT/AOT BRIDGE REPLACEMENT– ROAD IMPROVEMENT
RICHFORD, VT.

C | Drawing No. SHOP DRAWING F1 C22312–F1 | REV 1

Quantity: 1 | Project No: BRF030229 | SHEET 9 OF 14

QUANTITY = 1
WEIGHT = 21.97 TONS

Ftg. Slab - F2 Rebar Schedule				
MK		QTY	LENGTH	
401	#4	26	12 '- 0 "	
402	#4	26	10 '- 9 "	MAX
405	#4	4	10 '- 8 "	
501	#5	40	6 '- 4 "	
601	#6	6	12 '- 3 "	MAX

Ftg. Pedestal-F2 Rebar Schedule			
MK		QTY	LENGTH
402	#4	17	8 '- 3 "
403	#4	9	1 '- 8 "

FOOTING SLAB - F2 - BILL OF MATERIALS / EMBEDS				
CSI ID#	DESCRIPTION	QTY	UM	COMMENTS
EM-00078	8T SPREAD ANCHOR #FL119/P94	4	EA	
EM-00125	BOLT POCKET PLATE (GALVANIZED)	2	EA	
RM-00013	REBAR #4 BLACK- GR 60	424	LB	
RM-00015	REBAR #5 BLACK-GR 60 40'	264	LB	
RM-00017	REBAR #6 BLACK-GR 60 40'	110	LB	
MX-FA5000SC30	MIX DESIGN - FLY ASH 5000 SELF CONSOLIDATING	8.59	CY	
FOOTING PEDESTAL - F2 - BILL OF MATERIALS / EMBEDS				
RM-00013	REBAR #4 BLACK- GR 60	104	LB	
MX-FA5000SC30	MIX DESIGN - FLY ASH 5000 SELF CONSOLIDATING	2.26	CY	

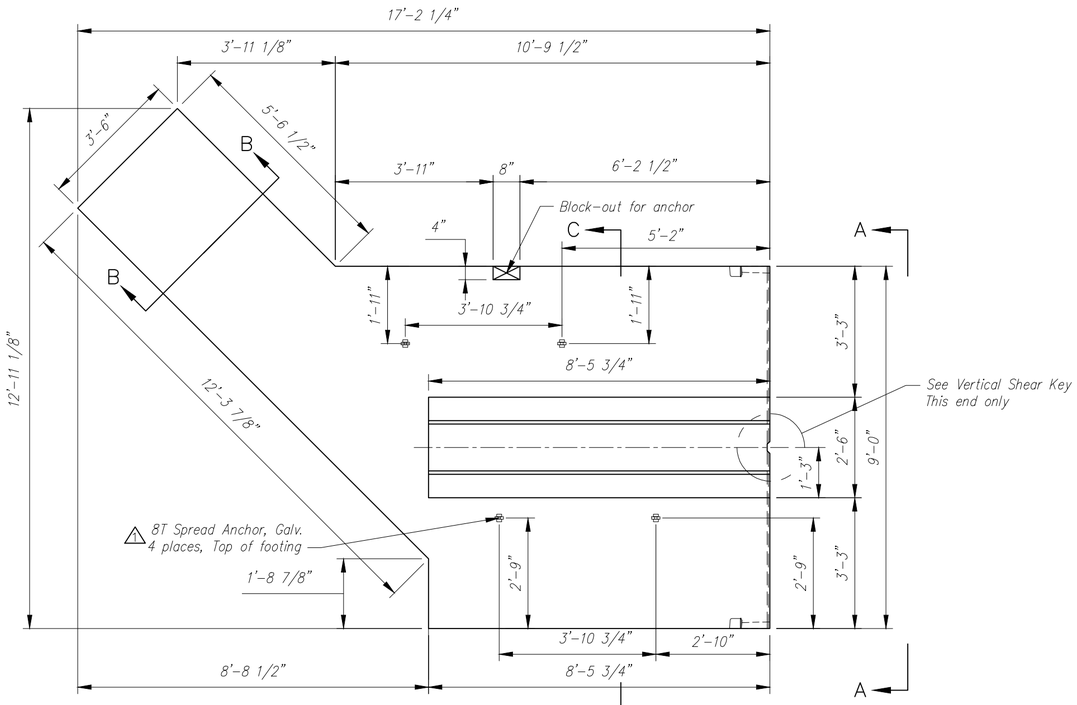

PLAN VIEW
Scale: 3/8" = 1'-0"

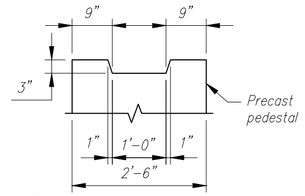

PEDESTAL KEYWAY
Scale: N.T.S.

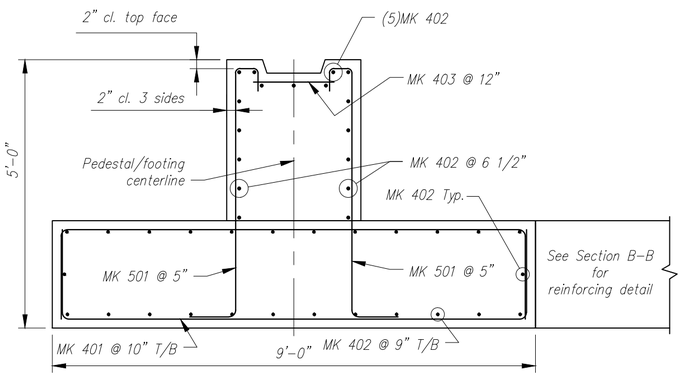

SECTION C-C
REINFORCING DETAIL
Scale: N.T.S.

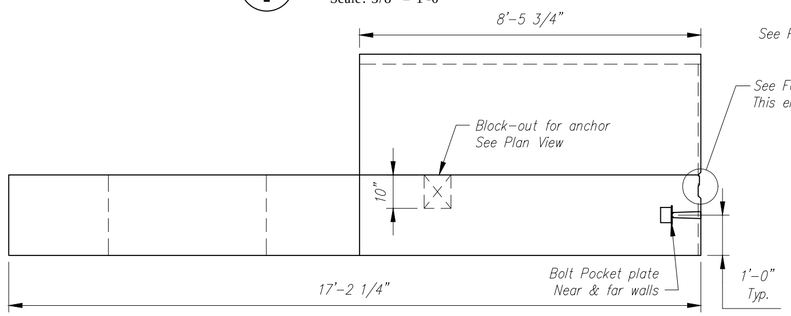

ELEVATION
Scale: 3/8" = 1'-0"

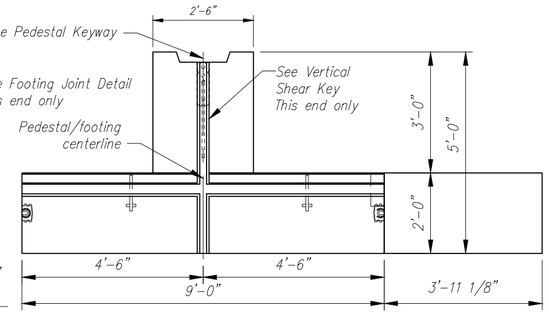

ELEVATION A-A
Scale: 3/8" = 1'-0"

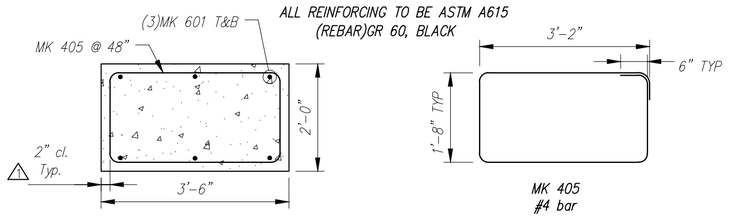

SECTION B-B
REINFORCING DETAIL
Scale: N.T.S.

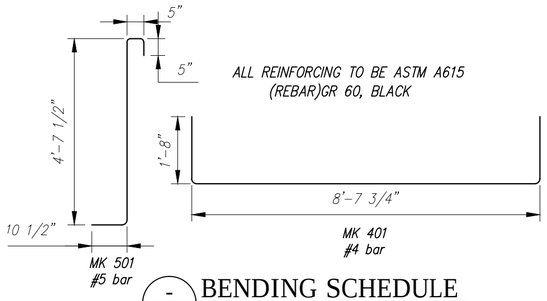

BENDING SCHEDULE
Scale: N.T.S.

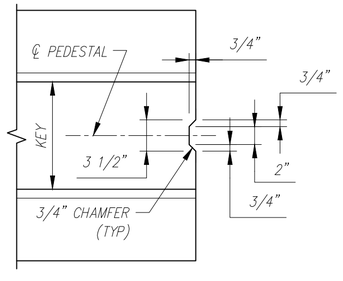

VERTICAL SHEAR KEY
Scale: N.T.S.

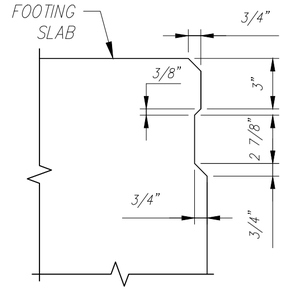

JOINT DETAIL
Scale: N.T.S.

Rev.	Date	By	DESCRIPTION
1	14MAY2015	RY	REVISED PER CUSTOMER REVIEW, REVISED ANCHOR LOCATIONS
2			
3			
4			
5			
6			
7			
8			
9			
10			

REVISIONS

Contractor is to verify that all information shown on drawings has been thoroughly checked, complies with the contract documents and is adequate to meet the field conditions. Some dimensions and details may differ slightly from contract drawings to accommodate the manufacturing or design process. Approval of this drawing indicates that any deviation from the contract documents has been reviewed and found to be acceptable. Production will not commence until receipt of signed, approved shop drawings.

This drawing contains information proprietary to CONCRETE SYSTEMS, INC. This drawing is disclosed with the understanding that it will be retained in confidence and its use limited solely to the purpose for which it is disclosed. It is understood that no reproduction of this drawing is authorized without permission from CONCRETE SYSTEMS, INC. and that it will be returned to CONCRETE SYSTEMS, INC. upon request.

This drawing is based upon information provided from the following documents and/or sources:

Engineer: STATE OF VT/AOT PROGRAM DEVELOPMENT
Project No: ----
Drawings: STATE OF VT/AOT PROPOSED IMPROVEMENT BRIDGE PROJECT, TOWN OF RICHFORD SHEETS 1,2,4,22,23,24 OF 36
Specifications: STANDARD SPECIFICATIONS FOR CONSTRUCTION DATED 2011

Other: ----

CSI
Concrete Systems Inc.
9 Commercial St., Hudson, NH,03051
Phone 603-889-4163
Fax 603-889-2417

STATE AGENCY
VTrans

Drawn By R. YEAGER	Date 16APR2015	
Reviewed By B. KOLAWOLE	Date	
Approved By C. VICK	Date 17JUN2015	

G.W. TATRO CONSTRUCTION, INC.
VT/AOT BRIDGE REPLACEMENT– ROAD IMPROVEMENT
RICHFORD, VT.

C | SHOP DRAWING F2 | REV 1
Drawing No. C22312–F2
Quantity: 1 | Project No: BRF030229 | SHEET 10 OF 14

QUANTITY = 1
WEIGHT = 19.85 TONS △1

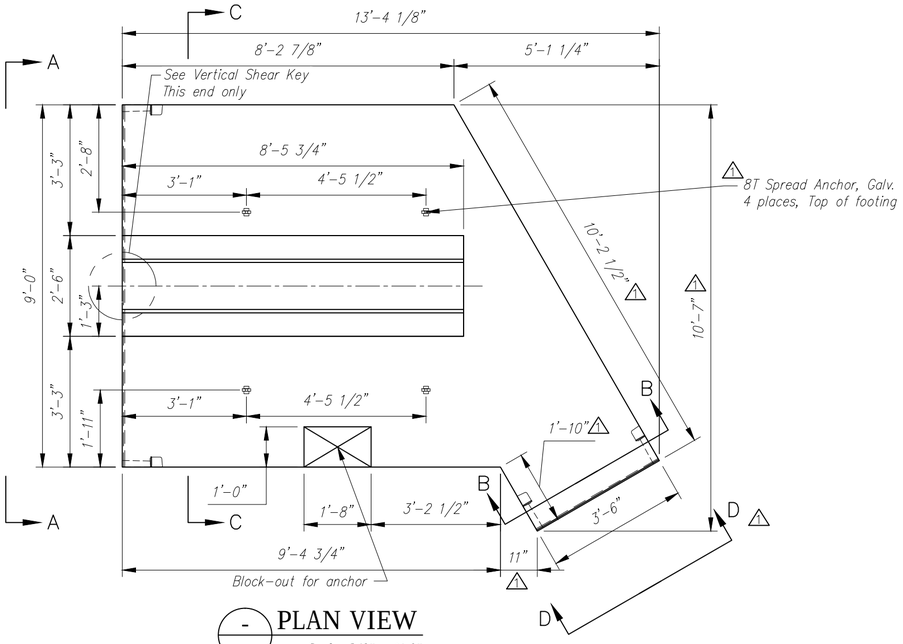

PLAN VIEW
Scale: 3/8" = 1'-0"

Ftg. Slab - F3A Rebar Schedule				
MK		QTY	LENGTH	
401	#4	22	12 '- 0 "	
402	#4	26	9 '- 4 "	MAX
405	#4	2	10 '- 8 "	
501	#5	40	6 '- 4 "	
601	#6	6	9 '- 10 "	MAX

Ftg. Pedestal-F3A Rebar Schedule			
MK		QTY	LENGTH
402	#4	17	8 '- 3 "
403	#4	9	1 '- 8 "

	FOOTING SLAB - F3A - BILL OF MATERIALS / EMBEDS				
	CSI ID#	DESCRIPTION	QTY	UM	COMMENTS
△1	EM-00078	8T SPREAD ANCHOR #FL119/P94	4	EA	
△1	EM-00125	BOLT POCKET PLATE (GALVANIZED)	4	EA	
△1	RM-00013	REBAR #4 BLACK- GR 60	353	LB	
	RM-00015	REBAR #5 BLACK-GR 60 40'	264	LB	
△1	RM-00017	REBAR #6 BLACK-GR 60 40'	89	LB	
	MX-FA5000SC30	MIX DESIGN - FLY ASH 5000 SELF CONSOLIDATING	7.44	CY	
	FOOTING PEDESTAL - F3A - BILL OF MATERIALS / EMBEDS				
	RM-00013	REBAR #4 BLACK- GR 60	104	LB	
	MX-FA5000SC30	MIX DESIGN - FLY ASH 5000 SELF CONSOLIDATING	2.26	CY	

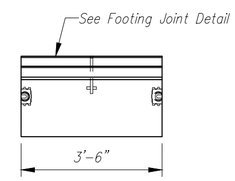

△1 VIEW D-D
Scale: N.T.S.

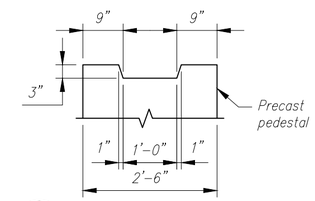

PEDESTAL KEYWAY
Scale: N.T.S.

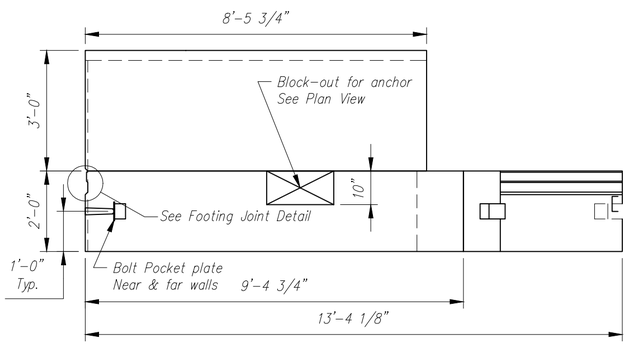

ELEVATION
Scale: 3/8" = 1'-0"

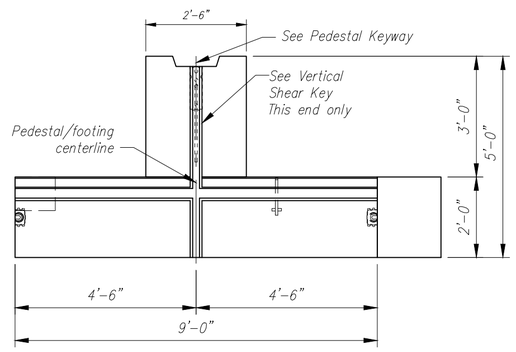

ELEVATION A-A
Scale: 3/8" = 1'-0"

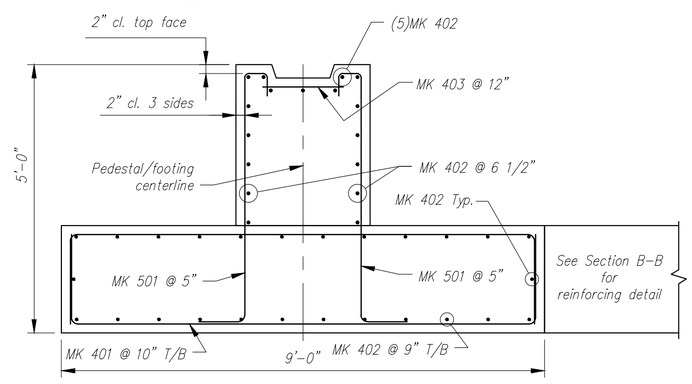

SECTION C-C
REINFORCING DETAIL
Scale: N.T.S.

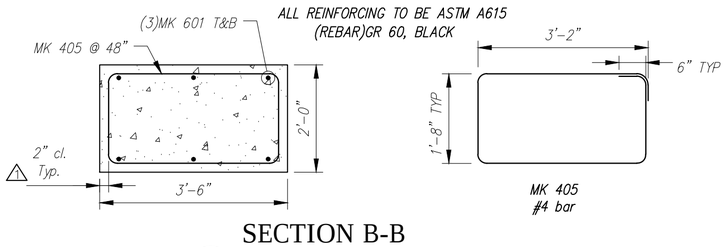

SECTION B-B
REINFORCING DETAIL
Scale: N.T.S.

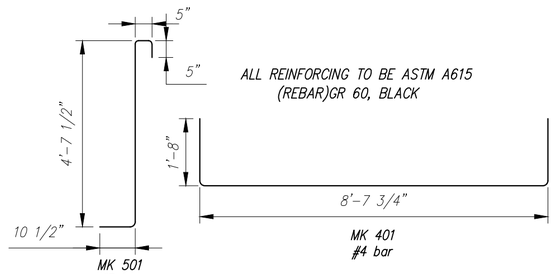

BENDING SCHEDULE
Scale: N.T.S.

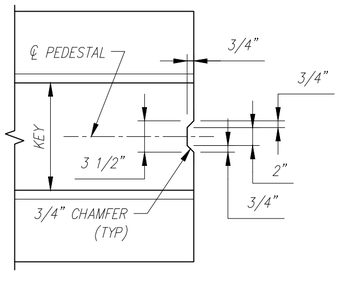

VERTICAL SHEAR KEY
Scale: N.T.S.

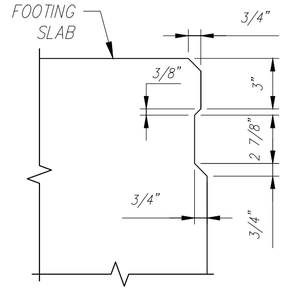

JOINT DETAIL
Scale: N.T.S.

Rev.	Date	DESCRIPTION	By
1	14MAY2015	REVISED PER CUSTOMER REVIEW, REVISED FOOTING, ADDED BOLT POCKETS,REVISED ANCHOR LOCATIONS	RY
2			
3			
4			
5			
6			
7			
8			
9			
10			

REVISIONS

Contractor is to verify that all information shown on drawings has been thoroughly checked, complies with the contract documents and is adequate to meet the field conditions. Some dimensions and details may differ slightly from contract drawings to accommodate the manufacturing or design process. Approval of this drawing indicates that any deviation from the contract documents has been reviewed and found to be acceptable. Production will not commence until receipt of signed, approved shop drawings.

This drawing contains information proprietary to CONCRETE SYSTEMS, INC. This drawing is disclosed with the understanding that it will be retained in confidence and its use limited solely to the purpose for which it is disclosed. It is understood that no reproduction of this drawing is authorized without permission from CONCRETE SYSTEMS, INC. and that it will be returned to CONCRETE SYSTEMS, INC. upon request.

This drawing is based upon information provided from the following documents and/or sources:

Engineer: STATE OF VT/AOT PROGRAM DEVELOPMENT
Project No: ----
Drawings: STATE OF VT/AOT PROPOSED IMPROVEMENT BRIDGE PROJECT, TOWN OF RICHFORD SHEETS 1,2,4,22,23,24 OF 36
Specifications: STANDARD SPECIFICATIONS FOR CONSTRUCTION DATED 2011
Other: ----

Concrete Systems Inc.
9 Commercial St., Hudson, NH,03051
Phone 603-889-4163
Fax 603-889-2417

STATE AGENCY
VTrans

Drawn By R. YEAGER	Date 16APR2015	
Reviewed By B. KOLAWOLE	Date	
Approved By C. VICK	Date 17JUN2015	

G.W. TATRO CONSTRUCTION, INC.
VT/AOT BRIDGE REPLACEMENT– ROAD IMPROVEMENT
RICHFORD, VT.

C | Drawing No. SHOP DRAWING F3A C22312–F3A | REV 1

Quantity: 1 | Project No: BRF030229 | SHEET 11 OF 14

QUANTITY = 1
WEIGHT = 6.30 TONS

FOOTING SLAB - F3B - BILL OF MATERIALS / EMBEDS				
CSI ID#	DESCRIPTION	QTY	UM	COMMENTS
EM-00078	8T SPREAD ANCHOR #FL119/P94	2	EA	
EM-00125	BOLT POCKET PLATE (GALVANIZED)	2	EA	
RM-00013	REBAR #4 BLACK- GR 60	29	LB	
RM-00017	REBAR #6 BLACK-GR 60 40'	105	LB	
MX-FA5000SC30	MIX DESIGN - FLY ASH 5000 SELF CONSOLIDATING	3.11	CY	

Ftg. Slab - F3B Rebar Schedule			
MK		QTY	LENGTH
405	#4	4	10 '- 8 "
601	#6	6	11 '- 8 "

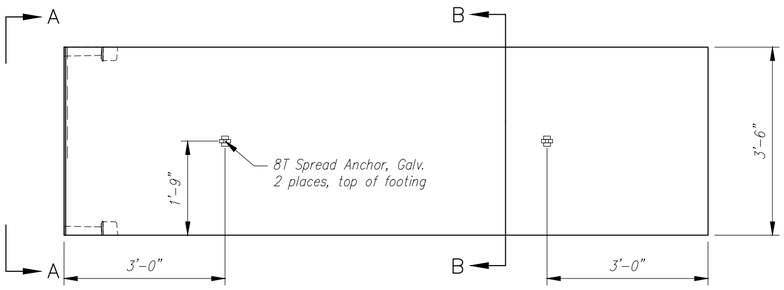

PLAN VIEW
Scale: 1/2" = 1'-0"

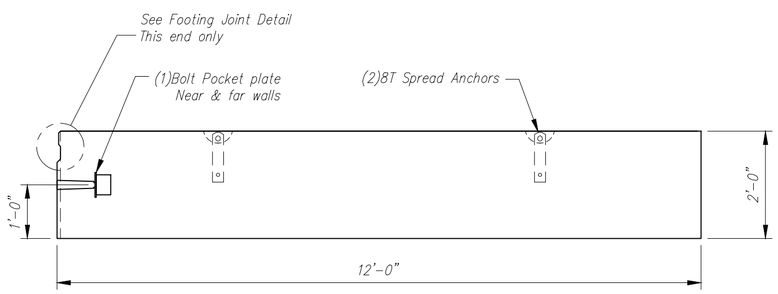

ELEVATION
Scale: 1/2" = 1'-0"

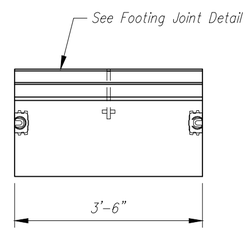

VIEW A-A
Scale: 1/2" = 1'-0"

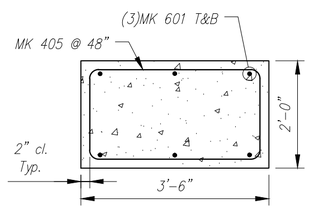

SECTION B-B
REINFORCING DETAIL
Scale: N.T.S.

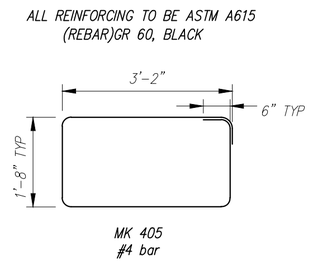

BENDING SCHEDULE
Scale: N.T.S.

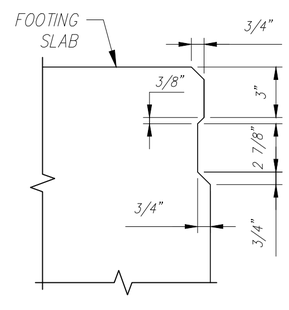

JOINT DETAIL
Scale: N.T.S.

Rev.	Date	DESCRIPTION	By
10			
9			
8			
7			
6			
5			
4			
3			
2			
1	14MAY2015	REVISED PER CUSTOMER REVIEW, NEW FOOTING SECTION	RY

REVISIONS

Contractor is to verify that all information shown on drawings has been thoroughly checked, complies with the contract documents and is adequate to meet the field conditions. Some dimensions and details may differ slightly from contract drawings to accommodate the manufacturing or design process. Approval of this drawing indicates that any deviation from the contract documents has been reviewed and found to be acceptable. Production will not commence until receipt of signed, approved shop drawings.

This drawing contains information proprietary to CONCRETE SYSTEMS, INC. This drawing is disclosed with the understanding that it will be retained in confidence and its use limited solely to the purpose for which it is disclosed. It is understood that no reproduction of this drawing is authorized without permission from CONCRETE SYSTEMS, INC. and that it will be returned to CONCRETE SYSTEMS, INC. upon request.

This drawing is based upon information provided from the following documents and/or sources:

Engineer: STATE OF VT/AOT PROGRAM DEVELOPMENT
Project No: ----
Drawings: STATE OF VT/AOT PROPOSED IMPROVEMENT BRIDGE PROJECT, TOWN OF RICHFORD SHEETS 1,2,4,22,23,24 OF 36
Specifications: STANDARD SPECIFICATIONS FOR CONSTRUCTION DATED 2011

Other: ----

Concrete Systems Inc.
9 Commercial St., Hudson, NH,03051
Phone 603-889-4163
Fax 603-889-2417

STATE AGENCY
VTrans

Drawn By R. YEAGER	Date 14MAY2015	C	G.W. TATRO CONSTRUCTION, INC. VT/AOT BRIDGE REPLACEMENT– ROAD IMPROVEMENT RICHFORD, VT.
Reviewed By	Date		Drawing No. SHOP DRAWING F3B C22312–F3B — REV 1
Approved By C. VICK	Date 17JUN2015	Quantity: 1	Project No: BRF030229 — SHEET 14 OF 14

QUANTITY = 1
WEIGHT = 23.69 TONS △2△1

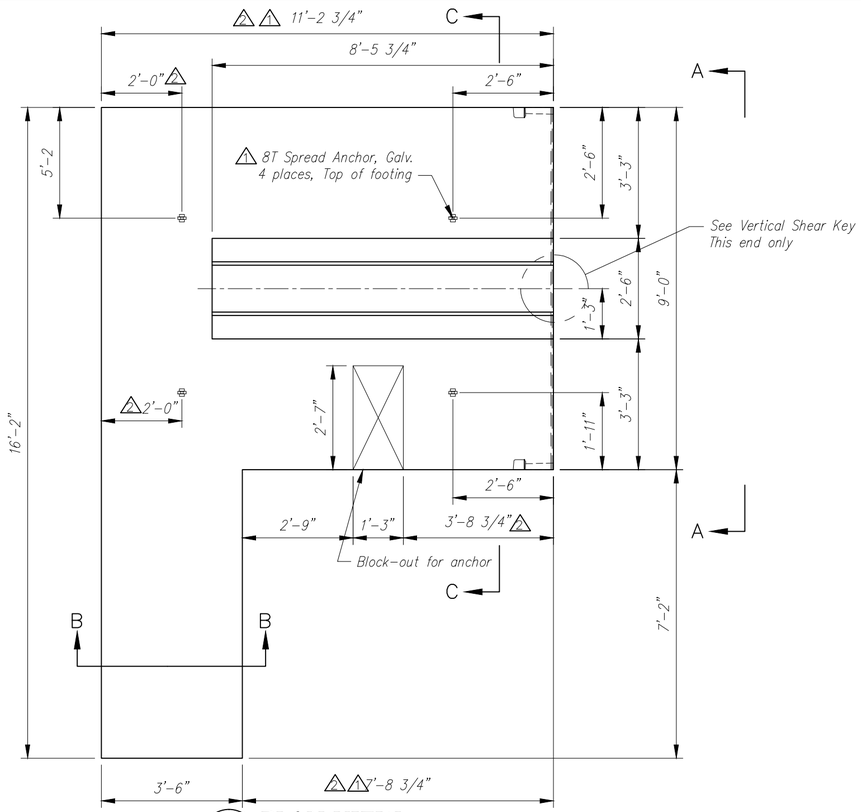

PLAN VIEW
Scale: 3/8" = 1'-0"

Ftg. Slab - F4 Rebar Schedule				
MK		QTY	LENGTH	
401	#4	28	12 '- 0 "	
402	#4	26	11 '- 0 "	MAX
405	#4	3	10 '- 8 "	
501	#5	40	6 '- 4 "	
601	#6	6	8 '- 0 "	MAX

Ftg. Pedestal-F4 Rebar Schedule			
MK		QTY	LENGTH
402	#4	17	8 '- 3 "
403	#4	9	1 '- 8 "

FOOTING SLAB - F4 - BILL OF MATERIALS / EMBEDS				
CSI ID#	DESCRIPTION	QTY	UM	COMMENTS
EM-00078	8T SPREAD ANCHOR #FL119/P94	4	EA	
EM-00125	BOLT POCKET PLATE (GALVANIZED)	2	EA	
RM-00013	REBAR #4 BLACK- GR 60	437	LB	
RM-00015	REBAR #5 BLACK-GR 60 40'	264	LB	
RM-00017	REBAR #6 BLACK-GR 60 40'	72	LB	
MX-FA5000SC30	MIX DESIGN - FLY ASH 5000 SELF CONSOLIDATING	9.34	CY	
FOOTING PEDESTAL - F4 - BILL OF MATERIALS / EMBEDS				
RM-00013	REBAR #4 BLACK- GR 60	104	LB	
MX-FA5000SC30	MIX DESIGN - FLY ASH 5000 SELF CONSOLIDATING	2.26	CY	

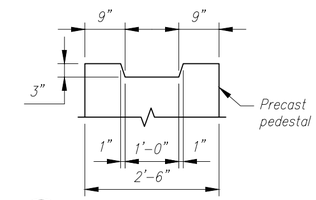

PEDESTAL KEYWAY
Scale: N.T.S.

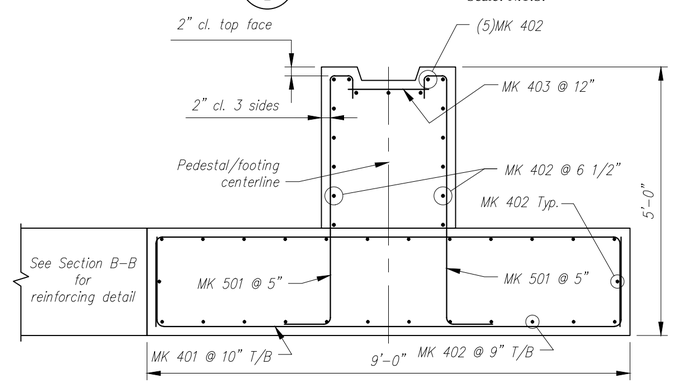

SECTION C-C
REINFORCING DETAIL
Scale: N.T.S.

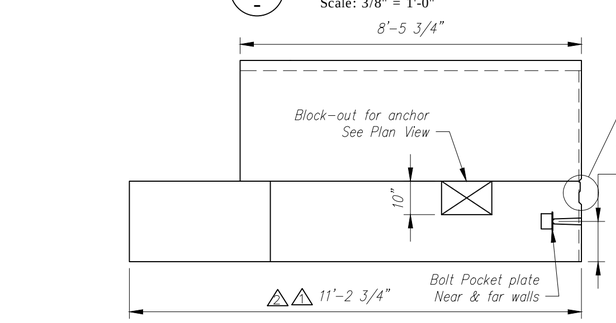

ELEVATION
Scale: 3/8" = 1'-0"

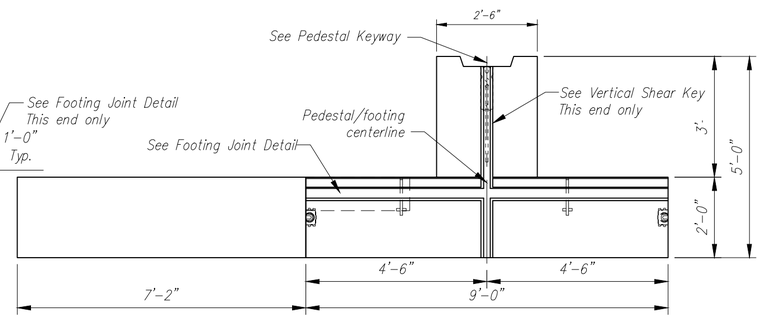

ELEVATION A-A
Scale: 3/8" = 1'-0"

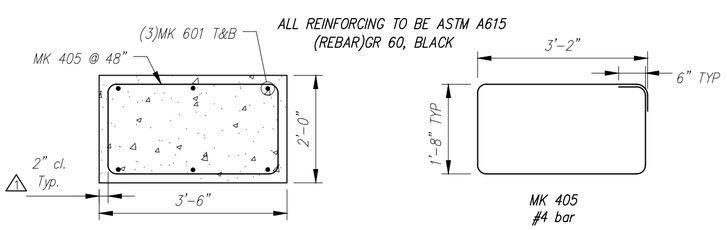

SECTION B-B
REINFORCING DETAIL
Scale: N.T.S.

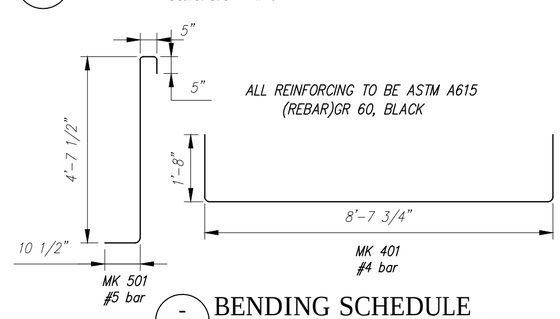

BENDING SCHEDULE
Scale: N.T.S.

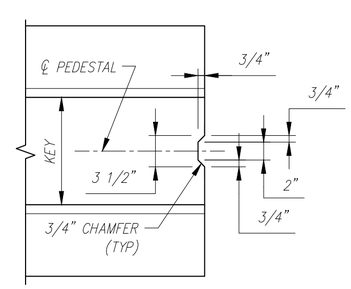

VERTICAL SHEAR KEY
Scale: N.T.S.

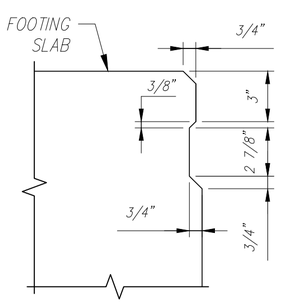

JOINT DETAIL
Scale: N.T.S.

Rev.	Date	By
10		
9		
8		
7		
6		
5		
4		
3	10JUN2015	RY
2	14MAY2015	RY
1		

DESCRIPTION
REVISIONS

ADDED 6" TO WIDTH, 11'-2.75 DIM WAS 10'-8.75
REVISED PER CUSTOMER REVIEW, REVISED FOOTING DUE TO WINGWALL RELOCATION

Contractor is to verify that all information shown on drawings has been thoroughly checked, complies with the contract documents and is adequate to meet the field conditions. Some dimensions and details may differ slightly from contract drawings to accommodate the manufacturing or design process. Approval of this drawing indicates that any deviation from the contract documents has been reviewed and found to be acceptable. Production will not commence until receipt of signed, approved shop drawings.

This drawing contains information proprietary to CONCRETE SYSTEMS, INC. This drawing is disclosed with the understanding that it will be retained in confidence and its use limited solely to the purpose for which it is disclosed. It is understood that no reproduction of this drawing is authorized without permission from CONCRETE SYSTEMS, INC. and that it will be returned to CONCRETE SYSTEMS, INC. upon request.

This drawing is based upon information provided from the following documents and/or sources:

Engineer: STATE OF VT/AOT PROGRAM DEVELOPMENT
Project No: ----
Drawings: STATE OF VT/AOT PROPOSED IMPROVEMENT BRIDGE PROJECT, TOWN OF RICHFORD SHEETS 1,2,4,22,23,24 OF 36
Specifications: STANDARD SPECIFICATIONS FOR CONSTRUCTION DATED 2011
Other: ----

Concrete Systems Inc.
9 Commercial St., Hudson, NH,03051
Phone 603-889-4163
Fax 603-889-2417

STATE AGENCY
VTrans

Drawn By R. YEAGER	Date 16APR2015	
Reviewed By B. KOLAWOLE	Date	
Approved By C. VICK	Date 17JUN2015	

G.W. TATRO CONSTRUCTION, INC.
VT/AOT BRIDGE REPLACEMENT– ROAD IMPROVEMENT
RICHFORD, VT.

C — SHOP DRAWING F4 — REV 2
Drawing No. C22312–F4
Quantity: 1 — Project No: BRF030229 — SHEET 12 OF 14

QUANTITY = 1
WEIGHT = 22.66 TONS

FOOTING SLAB - F5 - BILL OF MATERIALS / EMBEDS				
CSI ID#	DESCRIPTION	QTY	UM	COMMENTS
EM-00078	8T SPREAD ANCHOR #FL119/P94	4	EA	
EM-00125	BOLT POCKET PLATE (GALVANIZED)	4	EA	
RM-00013	REBAR #4 BLACK- GR 60	445	LB	
RM-00015	REBAR #5 BLACK-GR 60 40'	383	LB	
MX-FA5000SC30	MIX DESIGN - FLY ASH 5000 SELF CONSOLIDATING	7.86	CY	
FOOTING PEDESTAL - F5 - BILL OF MATERIALS / EMBEDS				
RM-00013	REBAR #4 BLACK- GR 60	147	LB	
MX-FA5000SC30	MIX DESIGN - FLY ASH 5000 SELF CONSOLIDATING	3.33	CY	

Ftg. Slab - F5 Rebar Schedule			
MK		QTY	LENGTH
401	#4	30	12 '- 0 "
402	#4	26	11 '- 9 "
501	#5	58	6 '- 4 "

Ftg. Pedestal-F5 Rebar Schedule			
MK		QTY	LENGTH
402	#4	17	11 '- 9 "
403	#4	12	1 '- 8 "

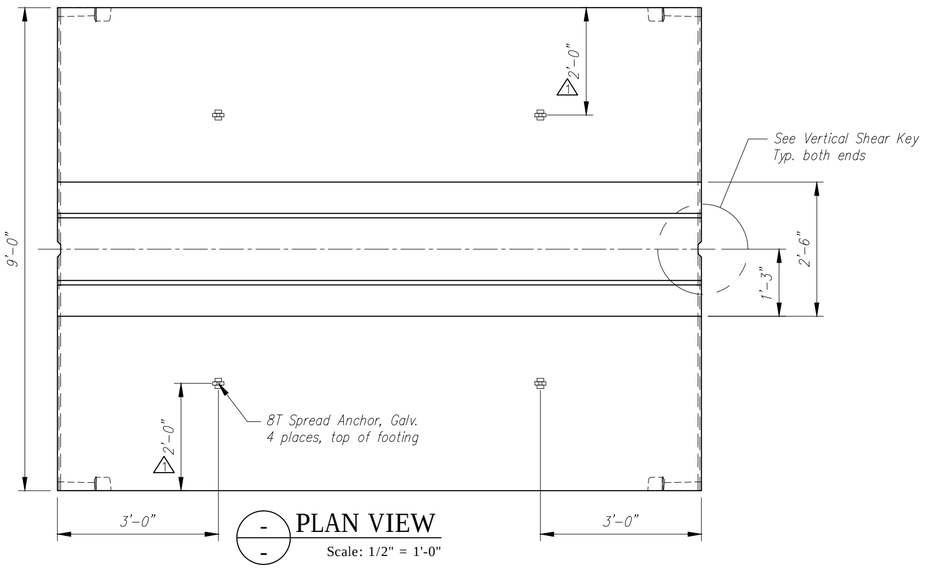

PLAN VIEW
Scale: 1/2" = 1'-0"

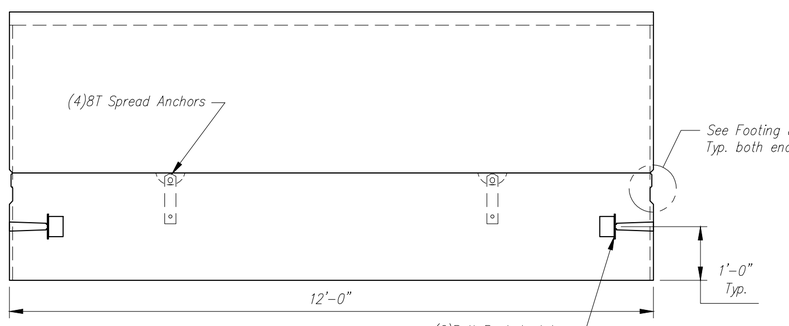

ELEVATION
Scale: 1/2" = 1'-0"

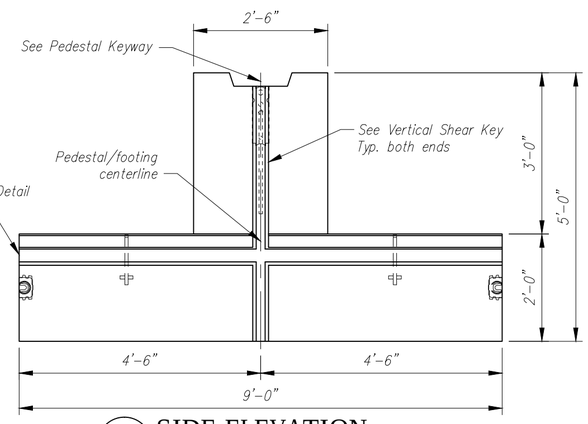

SIDE ELEVATION
Scale: 1/2" = 1'-0"

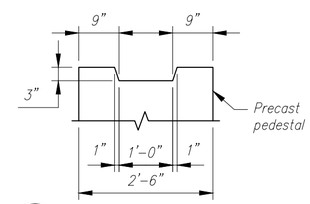

PEDESTAL KEYWAY
Scale: N.T.S.

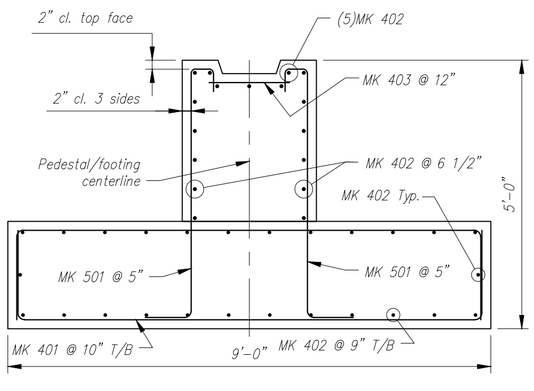

REINFORCING DETAIL
Scale: N.T.S.

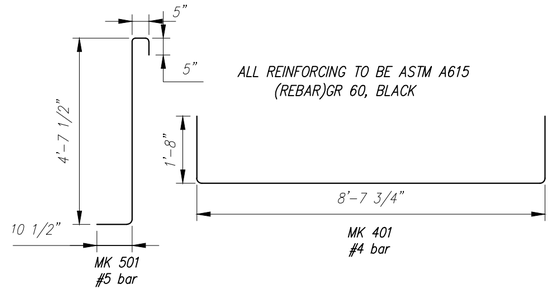

BENDING SCHEDULE
Scale: N.T.S.

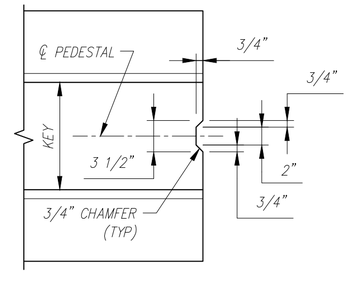

VERTICAL SHEAR KEY
Scale: N.T.S.

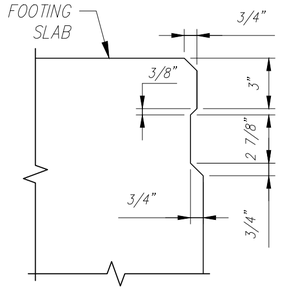

JOINT DETAIL
Scale: N.T.S.

By	Description	Date	Rev.
RY	REVISED PER CUSTOMER REVIEW, REVISED ANCHOR LOCATIONS	14MAY2015	1
			2
			3
			4
			5
			6
			7
			8
			9
			10

REVISIONS

Contractor is to verify that all information shown on drawings has been thoroughly checked, complies with the contract documents and is adequate to meet the field conditions. Some dimensions and details may differ slightly from contract drawings to accommodate the manufacturing or design process. Approval of this drawing indicates that any deviation from the contract documents has been reviewed and found to be acceptable. Production will not commence until receipt of signed, approved shop drawings.

This drawing contains information proprietary to CONCRETE SYSTEMS, INC. This drawing is disclosed with the understanding that it will be retained in confidence and its use limited solely to the purpose for which it is disclosed. It is understood that no reproduction of this drawing is authorized without permission from CONCRETE SYSTEMS, INC. and that it will be returned to CONCRETE SYSTEMS, INC. upon request.

This drawing is based upon information provided from the following documents and/or sources:

Engineer: STATE OF VT/AOT PROGRAM DEVELOPMENT
Project No: ----
Drawings: STATE OF VT/AOT PROPOSED IMPROVEMENT BRIDGE PROJECT, TOWN OF RICHFORD SHEETS 1,2,4,22,23,24 OF 36
Specifications: STANDARD SPECIFICATIONS FOR CONSTRUCTION DATED 2011

Other: ----

Concrete Systems Inc.
9 Commercial St., Hudson, NH,03051
Phone 603-889-4163
Fax 603-889-2417

STATE AGENCY
VTrans Working to Get You There

Drawn By R. YEAGER	Date 16APR2015	
Reviewed By B. KOLAWOLE	Date	
Approved By C. VICK	Date 17JUN2015	

G.W. TATRO CONSTRUCTION, INC.
VT/AOT BRIDGE REPLACEMENT– ROAD IMPROVEMENT
RICHFORD, VT.

C | SHOP DRAWING F5 | REV 1
Drawing No. C22312–F5
Quantity: 2 | Project No: BRF030229 | SHEET 13 OF 14