ERECTION SEQUENCE: DAY #1

Crane # 1 is a link-belt RTC 90 TON Hydraulic crane. Crane #1 will be positioned as show on sheet 1 the JD350 excavator will assist as shown in sheet 1 for G1-B and G2-B. G2-B is scheduled to be set first followed by G1-B. G2-B will be temporarily shored with chains and binders. Following the erection of G2-B diaphragms will be installed and temporary chains and binders removed.

ERECTION SEQUENCE:DAY #2

Crane # 1 is a link-belt RTC 90 TON Hydraulic crane. Crane #1 will be positioned as show on sheet 2 for G1-A and G2-A the JD 350 excavator will assist as shown in sheet 2. G1-A is scheduled to be set first and will be temporarily supported at the abutment with chains and binders followed by G2-A. Following the erection of G2-A diaphragms will be installed and temporary chain binder will be removed.

CRANE RADIUS AND WEIGHTS:

See sheets 1 and 2

RIGGING:

Rigging will consist of orange swg-500 synthetic endless slings with a capacity of 40 kips attached to a 25 ton beam clamp. The JD 350 excavator will be hooked with a 1/2” grade 80 tested chain with a capacity of 12,000 lbs or equivalent hooked to a 25 ton beam clamp.

LIFTING FORCES:

Lifting forces were analyzed as part of this submittal and are included in the calculation attachment.

TEMPORARY STOPPAGE:

Temporary stoppage of traffic will be required for the erection of girders 1and 2. Stoppage will be +- 10 minutes.

STRUCTURAL STEEL ERECTION PLAN
FOR THE
ROCKINGHAM BRF 0126(12) PROJECT

SHEET S1-ERECTION PLAN
SHEET S2- ERECTION PLAN
ATTACHMENT # 1-CALCULATIONS

STATE OF VERMONT
PHILIP J. SAVOY
No. 5671
REGISTERED
PROFESSIONAL ENGINEER

5-13-15

PREPARED
BY
COLD RIVER BRIDGES, LLC

COLD RIVER BRIDGES, LLC
10 LANBRO LANE
TEL 603-756-9300 WALPOLE, NH FAX 603-756-9303

ROCKINGHAM BRF 0126 (12)

ERECTION PLAN

SHEET NUMBER
COVER

DATE: 10-22-14 scale:

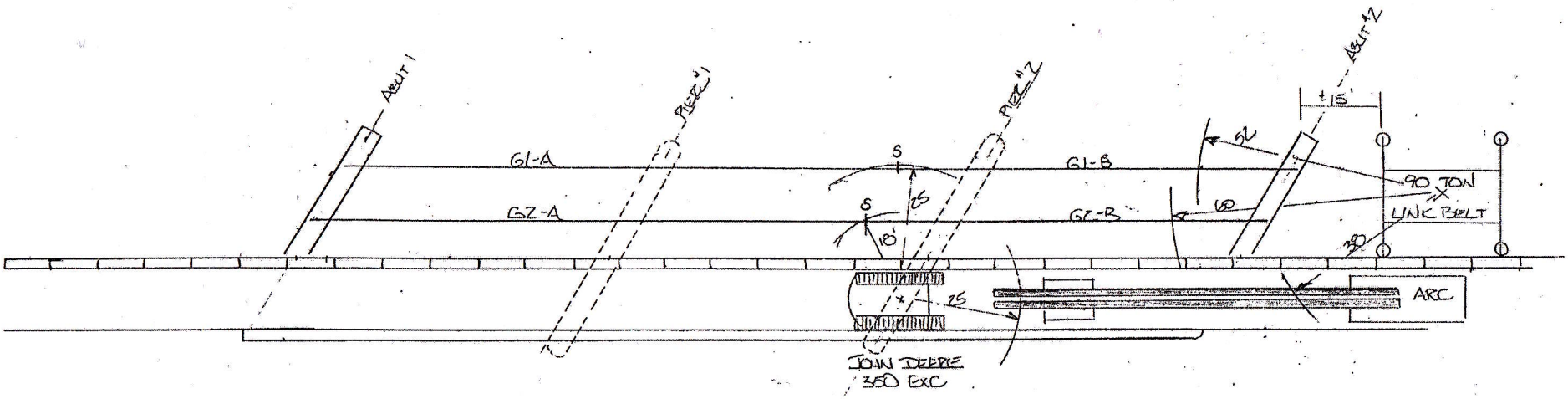

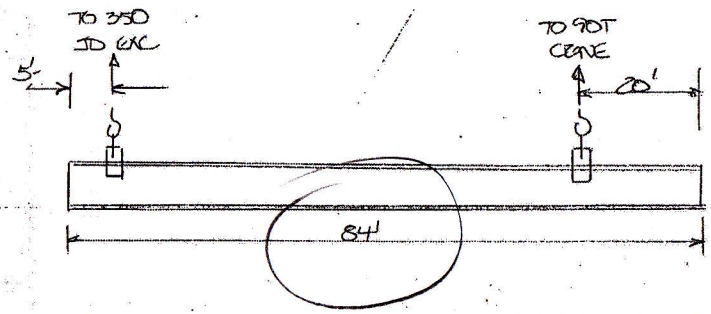

Comments

Due to multiple utility crossings at each end of bridge Only place to unload is off the existing Bridge
Staged construction, Utilities, and Historic Site constraints severely limit the allowable crane pad area
Utility crossings behind bridge preclude the use of anything but Hydraulic Boom crane work

Installation Sequence

Provide Message Boards prior to installation warning of potential delays on Installation Days(2)
Utilize alternating one way traffic with Flaggers on day of Installation (signals off)
Preposition lifting and safety gear on girders prior to site arrival
Halt traffic and position truck on bridge as shown
Position Excavator behind Transport, Connect to Lifters, Provide tension and release chains
Install Girder, Move transport off Bridge, Release traffic,
Allow traffic to moderate before proceeding with 2nd girder
Day 1 Install girders G1-A, and G2-A and related Diapragms
Day 2 Install girders G1-B, and G2-B and related Diapragms
Day 3 Torque Connections

pick #	piece #	PIECE WIEGHT Lbs	90 TN CRANE ON HOOK Lbs	90 TN CRANE RADIUS Ft	90 TN CRANE Capacity(85%) Lbs	350 JD EXC ON HOOK Lbs	350 JD EXC RADIUS Ft	350 JD EXC Capacity(75%) Lbs
#1 off load	G1-B	16600	9800	38	34900	6800	25	16581
#1 set	G1-B	16600	9800	52	28000	6800	25	12116
#2 off load	G2-B	16600	9800	38	34900	6800	25	16581
#2 set	G2-B	16600	9800	60	20900	6800	20	12116

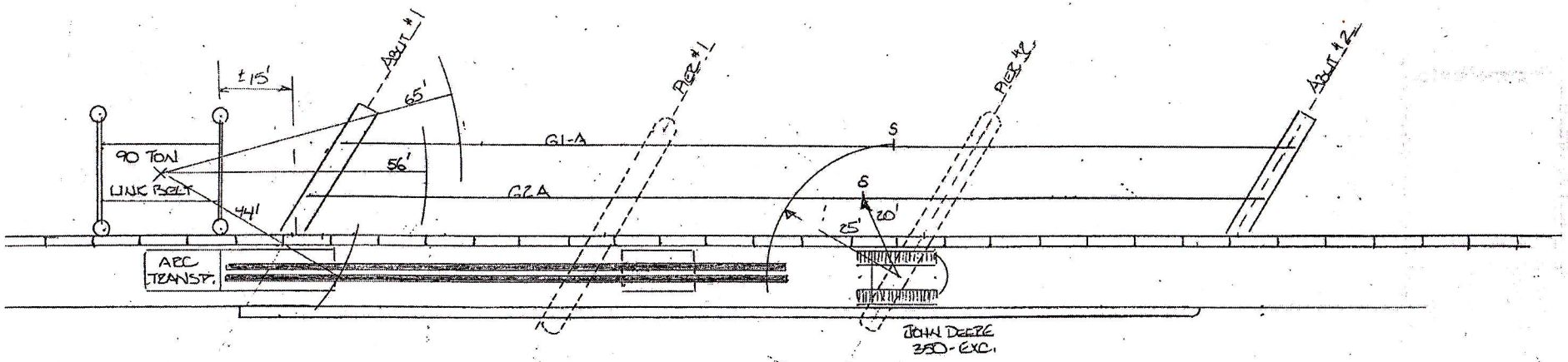

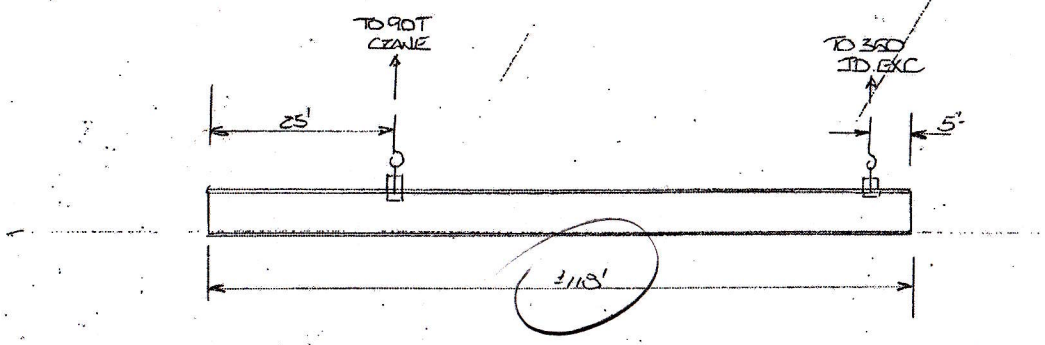

Comments

Due to multiple utility crossings at each end of bridge Only place to unload is off the existing Bridge
Staged construction, Utilities, and Historic Site constraints severely limit the allowable crane pad area
Utility crossings behind bridge preclude the use of anything but Hydraulic Boom crane work

Installation Sequence

Provide Message Boards prior to installation warning of potential delays on Installation Days(2)
Utilize alternating one way traffic with Flaggers on day of Installation (signals off)
Preposition lifting and safety gear on girders prior to site arrival
Halt traffic and position truck on bridge as shown
Position Excavator behind Transport, Connect to Lifters, Provide tension and release chains
Install Girder, Move transport off Bridge, Release traffic,
Allow traffic to moderate before proceeding with 2nd girder
Day 1 Install girders G1-A, and G2-A and related Diapragms
Day 2 Install girders G1-B, and G2-B and related Diapragms
Day 3 Torque Connections

pick #	piece #	PIECE WIEGHT Lbs	90 TN CRANE ON HOOK Lbs	90 TN CRANE RADIUS Ft	90 TN CRANE Capacity(85%) Lbs	350 JD EXC ON HOOK Lbs	350 JD EXC RADIUS Ft	350 JD EXC Capacity(75%) Lbs
#1 off load	G1-A	22800	14000	44	32100	8800	25	16581
#1 set	G1-A	22800	14000	65	18600	8800	25	12116
#2 off load	G2-A	22800	14000	44	32100	8800	25	16581
#2 set	G2-A	22800	14000	56	24300	8800	20	12116

ATTACHMENT #1

Savoy Engineering

Project: Rockingham Bridge **Date:** 5-19-15 **Sheet** 1 **of** 7
Prepared By: PJS **Project Details** Flange Check

BEAM FLANGE LIFTING STRESS
(84' BEAM LIFT)

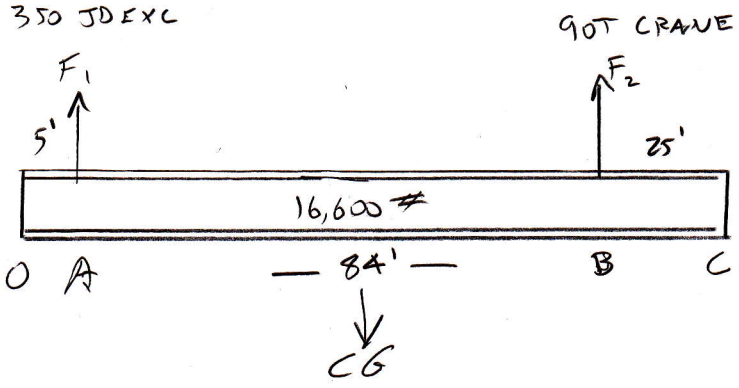

$$\Sigma M_O = 0 = (5)F_1 - (16600)(42) + (59')F_2$$

$$0 = 5F_1 - 672{,}000 + 59F_2$$

$$5F_1 + 59F_2 = 672{,}000 \text{ Ft-\#}$$

$$F_1 + F_2 = 16{,}600 \#$$

$$59F_2 = 672000 - 5F_1$$

$$F_2 = \frac{672000}{59} - \frac{5}{59}F_1$$

$$F_2 = 16600 - F_1$$

STATE OF VERMONT
PHILIP J. SAVOY
No. 5671
REGISTERED PROFESSIONAL ENGINEER

5-19-15

$$F_2 = 16600 - F_1 = \frac{672000}{59} - \frac{5}{59}F_1$$

$$0 = \frac{672000}{59} - \frac{5}{59}F_1 - 16600 + F_1$$

$$0.91F_1 = \frac{672000}{59} - 16600$$

$$0.91F_1 = 5210.16$$

$$F_1 = \frac{5210.16}{.91} = 5,725 \#$$

$$F_2 = 22,325 \#$$

Savoy Engineering

Project:_____ **Date:**_____ **Sheet**__ **of** ___

Prepared By:_____ **Project Details**_____

F_2, MAX LOAD

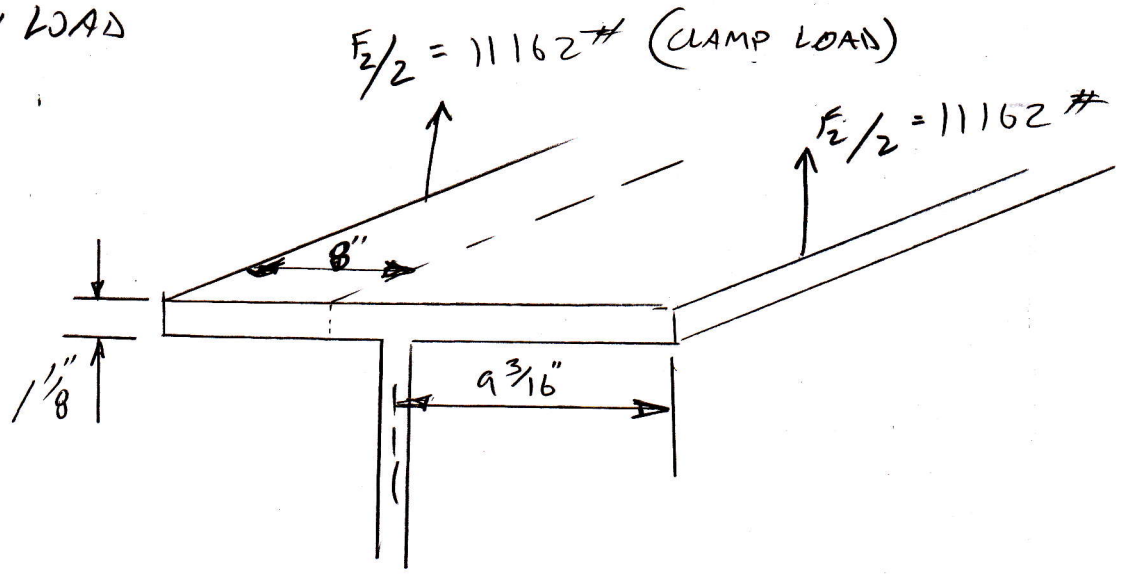

NOTE:

ASSUME ENTIRE CLAMP LOAD IS ON OUTER EDGE OF FLANGE, WORST CASE.

CHECK BENDING:

$$M_{MAX} = FL = 11{,}162^{\#}(8") = 89301 \text{ in-\#}$$

$$\sigma_{MAX} = \frac{M}{Z}, \qquad Z = \frac{bd^2}{6}$$

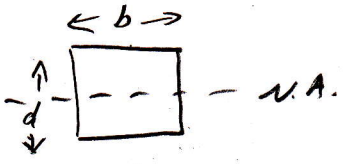

$$Z = 22"\,(\text{CLAMP})(1\tfrac{1}{8})^2/6 = 4.64 \text{ in}^3$$

$$\sigma_{MAX\ BENDING} = \frac{M}{Z} = \frac{89301 \text{ in-\#}}{4.64 \text{ in}^3} = 19{,}243 \text{ psi}$$

< 36 ksi, OK

ATTACHMENT # 1

Savoy Engineering

Project:_____ **Date:**_____ **Sheet**__ **of** ___

Prepared By:_____ **Project Details**_____

CHECK SHEAR

SHEAR AREA

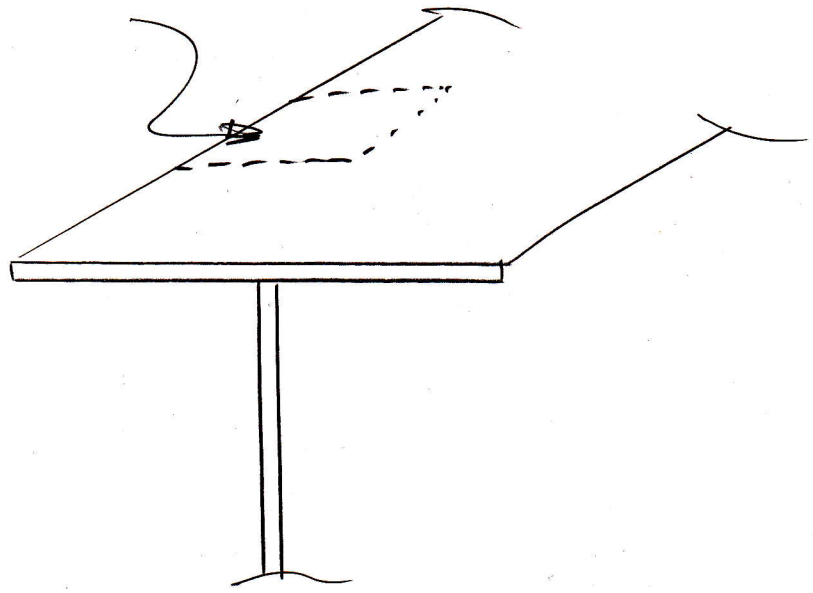

$(3 \times 1.125) + (3 \times 1.125) + (3 \times 1.125) = 10.125 \text{ in}^2$

$F_1 = 13{,}990^{\#}$

$S = V = F/A = \dfrac{13990^{\#}}{10.125 \text{ in}^2} = 1381 \text{ psi}$, OK

(118' BEAM LIFT)

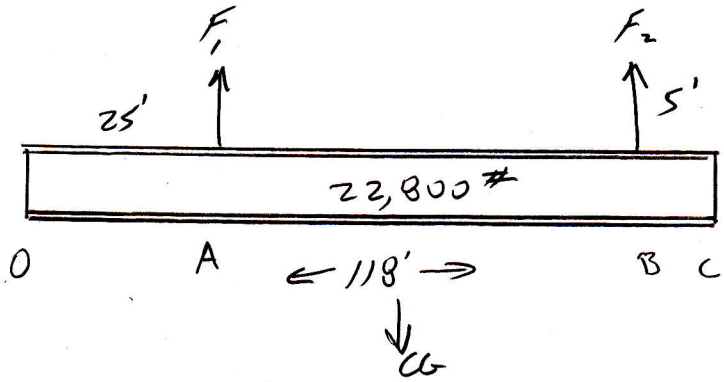

$$\Sigma M_O = 0 = (25)F_1 + (113)F_2 - (22800)59$$

$$-F_1 = \frac{(22800)(59)}{25} - \frac{113F_2}{25}$$

$$-F_1 = 53808 - 4.52F_2$$

$$F_1 + F_2 = 22{,}800\#$$

$$F_2 = 22{,}800 - F_1$$

$$F_1 = 53808 - (4.52)(22800 - F_1)$$

$$-F_1 = 53808 - (4.52(22800 - F_1))$$

$$-F_1 = 53808 - (103056 - 4.52F_1)$$

$$-F_1 = 49248 - 4.52F_1$$

$$+4.52F_1 = \quad + 4.52F_1$$

$$3.52F_1 = 49248\#$$

$$F_1 = \underline{13990\#}$$

$$F_2 = 8809\#$$

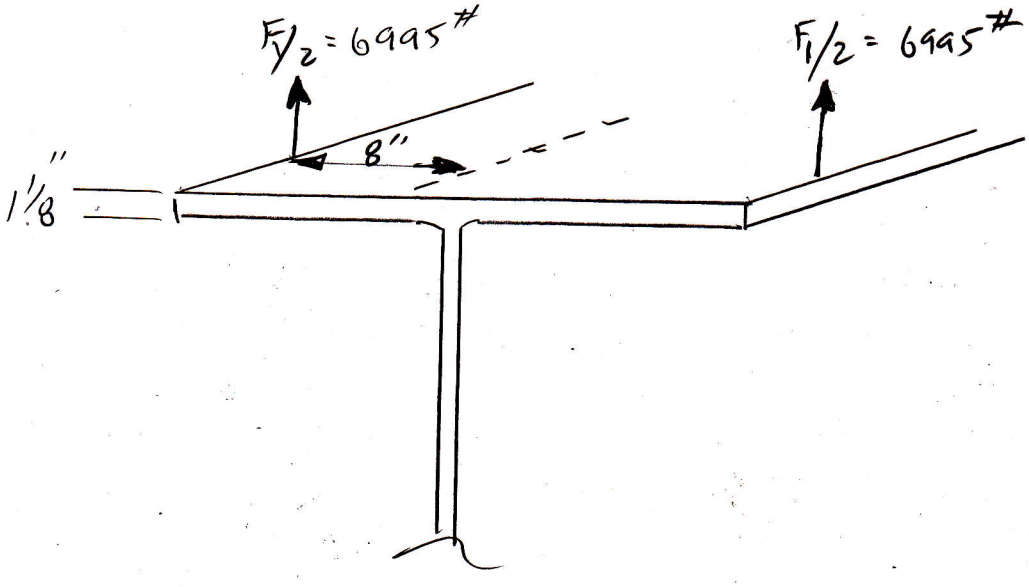

CHECK BENDING:

$$M_{MAX} = FL = 13990/2\,(8'') = 55{,}960 \text{ in-\#}$$

$$\sigma_{MAX} = \frac{M}{Z}, \qquad Z = 4.64 \text{ in}^2$$

$$\sigma_{MAX} = \frac{55{,}960 \text{ in-\#}}{4.64 \text{ in}^2} = 12{,}060 \text{ psi}, < 36k; \underline{\underline{OK}}$$

CHECK SHEAR:

$$A_s = 10.125 \text{ in}^2$$

$$V = F/A = 6995/10.125 = 690 \text{ psi}; \underline{\underline{OK}}$$

Crosby® Clamp-Co Beam Clamps

BEAM CLAMPS

Crosby Clamp-Co Beam Clamps provide an efficient method for handling wide flange beam sections and plate girders. When lifting, these beam clamps grip the beam at three points, and when properly balanced and safely guided, the beam can be handled even if the clamp is slightly off center lengthwise.

- Capacities: 5 Tons to 35 Tons
- Eliminates the need for slings, chokers, and spreader bars.
- When applied to load, the tongs automatically open and slide under the flange of the beam.
- Center plate and gripping tongs work together - the heavier the beam, the greater the clamping pressure.
- Model "NS" clamps have a recessed base to accept studs welded to the beam surface.
- Individually Proof Tested to 2 times the Working Load Limit with certification.
- Finish - Red Paint
- All sizes are **RFID EQUIPPED**.

NOTE: Control the beam at all times. Beams should be gripped as near the center as possible. Snubbing lines at each end must be used to control excessive twisting or swinging, and to guide the beam to its proper place. Each lifting situation may have a specific demand which should be addressed before lifting.

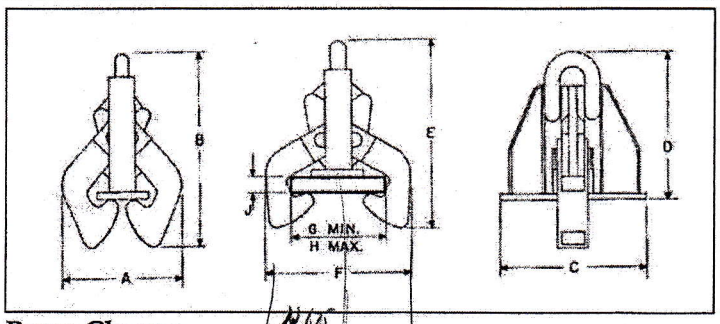

Beam Clamps

Model No.	BCFG Stock No.	Working Load Limit (Tons)*	Flange Grip Range (in.)		Weight Each (lbs.)	Dimensions (in.)								
			Width	Thickness		A	B	C	D	E	F	G	H	J
F-5	2732000	5	4 - 10	.5 - 1	70.0	9.50	26.00	12.00	20.00	25.50	16.00	.75	4.00	1.00
F-15	2732009	15	7 - 17	.5 - 2	153	15.50	34.00	17.00	27.00	34.50	25.00	7.00	17.00	2.00
NS-15	2732018	15	7 - 17	.5 - 2	153	15.50	34.00	17.00	27.00	34.50	25.00	7.00	17.00	2.00
F-25	2732027	25	16 - 24	1 - 3	290	23.00	48.00	22.25	36.00	53.00	37.25	16.00	24.00	3.00
NS-25	2732036	25	16 - 24	1 - 3	290	23.00	48.00	22.25	36.00	53.00	37.25	16.00	24.00	3.00
F-35	2732045	35	16 - 36	1.63 - 4	519	30.00	64.00	27.50	48.00	58.00	53.00	16.00	36.00	4.00
NS-35	2732054	35	16 - 36	1.63 - 4	519	30.00	64.00	27.50	48.00	58.00	53.00	16.00	36.00	4.00

* Maximum Proof Load is 2 times the Working Load Limit.

Base Stock No.	Base Dimensions (in.)						
	C	L	M	N	P	S	T
F-5	13.50	-	-	-		3.00	-
F-15	17.00	-	-	-	-	4.00	-
NS-15	17.00	.50	6.50	4.50	.75	4.00	2.50
F-25	22.25	-	-	-	-	5.50	-
NS-25	22.25	.75	7.75	6.50	.75	5.50	4.00
F-35	27.50	-	-	-	-	6.00	-
NS-35	27.50	.75	9.00	8.50	.75	6.00	4.50

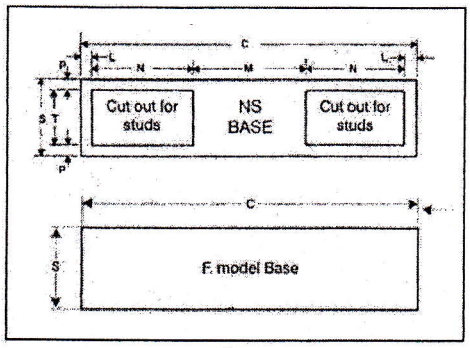

28,800 lb Counterweight – Fully Extended Outriggers – 360° Rotation
(All Capacities Are Listed In Pounds)

Radius (ft)	Boom Length (ft)											Radius (ft)
	38	50	60	70	80	90	100	110	120	130	140	
8	180,000											8
10	160,000	152,000	117,900	70,800								10
12	139,600	138,600	108,800	70,800	85,100							12
15	116,300	118,400	106,500	70,800	78,400	54,200						15
20	85,300	87,500	87,900	63,500	76,500	52,000	49,100	27,200				20
25	66,200	68,500	69,000	54,800	68,500	45,600	45,200	36,300	28,000	26,900		25
30	53,200	55,500	56,100	47,800	55,700	40,600	42,200	35,900	28,000	26,500	24,400	30
35		46,200	46,800	42,500	46,400	36,500	38,300	35,500	28,000	26,300	24,100	35
40		39,600	40,100	38,100	39,300	33,000	34,900	33,400	28,000	26,100	24,000	40
45			34,200	34,500	33,800	30,100	32,100	30,300	26,100	25,900	23,800	45
50			28,500	28,900	28,900	27,600	28,500	27,900	24,100	25,200	23,700	50
55			23,700	24,600	24,700	24,700	24,300	23,800	22,300	23,500	23,600	55
60				21,100	21,200	21,300	20,900	20,400	20,700	21,900	21,700	60
65					18,500	18,500	18,600	18,900	19,300	19,300	18,900	65
70					17,300	16,200	17,500	17,700	17,400	17,000	16,600	70
75						14,900	15,900	15,700	15,400	15,000	14,700	75
80						14,100	14,200	14,100	13,700	13,400	13,000	80
85							12,800	12,700	12,400	12,000	11,700	85
90							11,600	11,500	11,200	10,800	10,500	90
95								10,400	10,100	9,700	9,400	95
100								9,400	9,100	8,700	8,400	100
105								6,300	8,200	7,900	7,600	105
110									7,400	7,100	6,800	110
115										6,400	6,100	115
120										5,800	5,500	120
125											4,900	125
130											4,400	130

CCB

This information is not for crane operation. Operator must refer to the in–cab information for crane operation. Rated lifting capacities shown on fully extended outriggers do not exceed 85% of the tipping loads and on tires do not exceed 75% of the tipping loads.

ATTACHMENT # 1

Crosby® Clamp-Co Beam Clamps

CCBC

Crosby Clamp-Co Beam Clamps provide an efficient method for handling wide flange beam sections and plate girders. When lifting, these beam clamps grip the beam at three points, and when properly balanced and safely guided, the beam can be handled even if the clamp is slightly off center lengthwise.

- Capacities: 5 Tons to 35 Tons
- Eliminates the need for slings, chokers, and spreader bars.
- When applied to load, the tongs automatically open and slide under the flange of the beam.
- Center plate and gripping tongs work together - the heavier the beam, the greater the clamping pressure.
- Model "NS" clamps have a recessed base to accept studs welded to the beam surface.
- Individually Proof Tested to 2 times the Working Load Limit with certification.
- Finish - Red Paint.
- All sizes are **RFID EQUIPPED.**

NOTE: Control the beam at all times. Beams should be gripped as near the center as possible. Snubbing lines at each end must be used to control excessive twisting or swinging, and to guide the beam to its proper place. Each lifting situation may have a specific demand which should be addressed before lifting.

Beam Clamps

Model No.	CCBC-500 Stock No.	Working Load Limit (Tons)*	Flange Grip Range (in.)		Weight Each (lbs.)	Dimensions (in.)								
			Width	Thickness		A	B	C	D	E	F	G	H	J
F-5	2732000	5	4 - 10	.5 - 1	70.0	9.50	26.00	12.00	20.00	25.50	16.00	4.00	10.00	1.00
F-15	2732009	15	7 - 17	.5 - 2	153	15.50	34.00	17.00	27.00	34.50	25.00	7.00	17.00	2.00
NS-15	2732018	15	7 - 17	.5 - 2	153	15.50	34.00	17.00	27.00	34.50	25.00	7.00	17.00	2.00
F-25	2732027	25	16 - 24	1 - 3	290	23.00	48.00	22.25	36.00	53.00	37.25	16.00	24.00	3.00
NS-25	2732036	25	16 - 24	1 - 3	290	23.00	48.00	22.25	36.00	53.00	37.25	16.00	24.00	3.00
F-35	2732045	35	16 - 36	1.63 - 4	519	30.00	64.00	27.50	48.00	58.00	53.00	16.00	36.00	4.00
NS-35	2732054	35	16 - 36	1.63 - 4	519	30.00	64.00	27.50	48.00	58.00	53.00	16.00	36.00	4.00

* Maximum Proof Load is 2 times the Working Load Limit and design factor based on EN13155 and ASME B30.20.
NOTE: : For beam clamps larger than 35 Tons, please contact the Crosby Special Engineered Products Department.

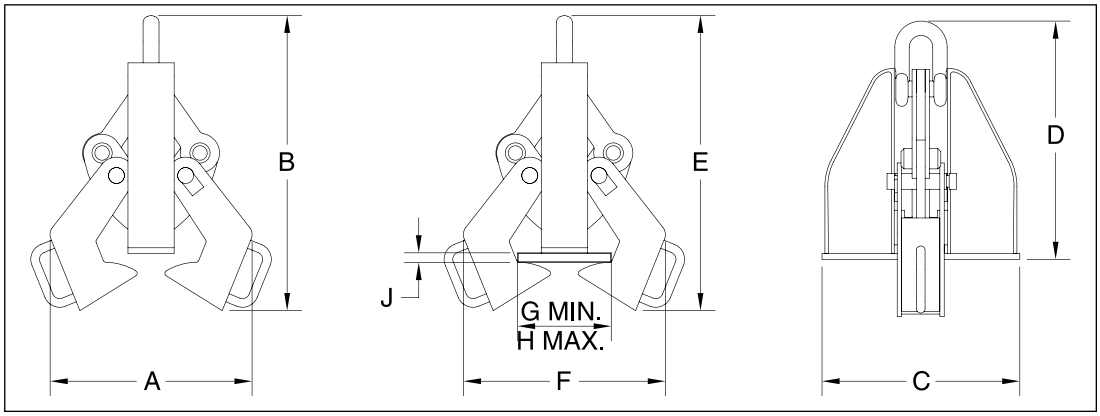

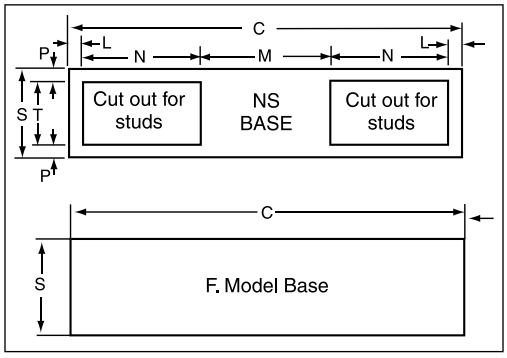

Base Stock No.	Base Dimensions (in.)						
	C	L	M	N	P	S	T
F-5	13.50	-	-	-	-	3.00	-
F-15	17.00	-	-	-	-	4.00	-
NS-15	17.00	.50	6.50	4.50	.75	4.00	2.50
F-25	22.25	-	-	-	-	5.50	-
NS-25	22.25	.75	7.75	6.50	.75	5.50	4.00
F-35	27.50	-	-	-	-	6.00	-
NS-35	27.50	.75	9.00	8.50	.75	6.00	4.50

ATTACHMENT # 1

Copyright © 2013 The Crosby Group LLC
All Rights Reserved

Dimensions

350D LC

A 8-ft. 9-in. (2.66 m) arm ..... 11 ft. 5 in. (3.47 m)
10-ft. 6-in. (3.2 m) arm ..... 10 ft. 9 in. (3.27 m)
13-ft. 1-in. (4.0 m) arm ..... 11 ft. 10 in. (3.60 m)

B 8-ft. 9-in. (2.66 m) arm ..... 36 ft. 6 in. (11.13 m)
10-ft. 6-in. (3.2 m) arm ..... 36 ft. 1 in. (11.00 m)
13-ft. 1-in. (4.0 m) arm ..... 36 ft. 5 in. (11.09 m)

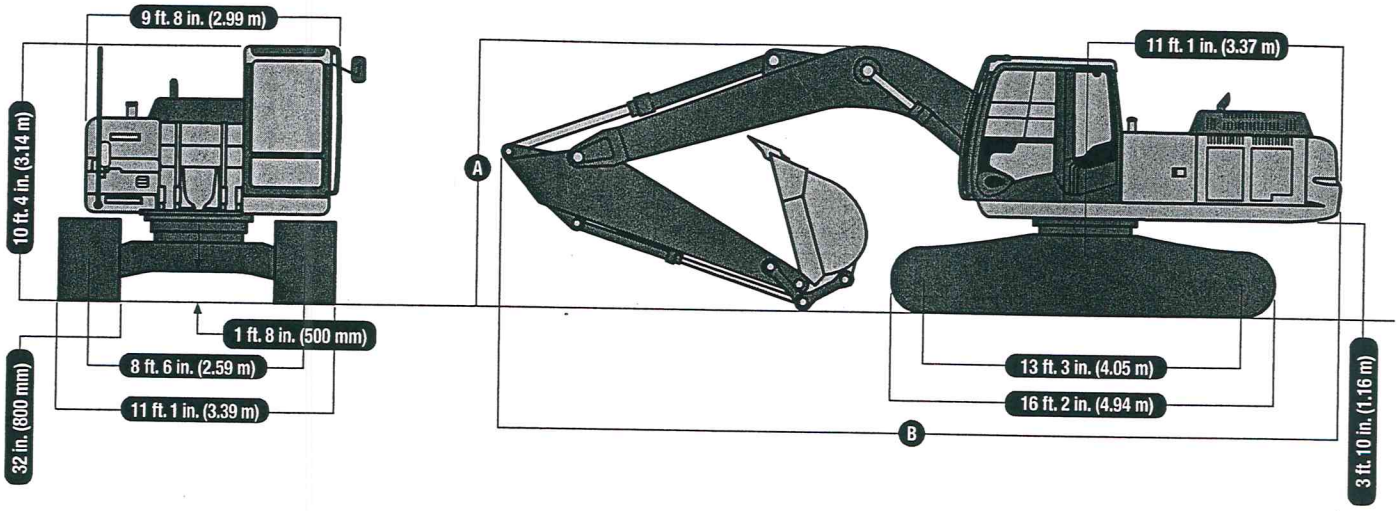

Lift Capacities

Boldface italic type indicates hydraulic-limited capacities; lightface type indicates stability-limited capacities, in lb. (kg). Ratings at bucket lift hook; machine equipped with 2.3-cu.-yd. (1.76 m³), 54-in. (1370 mm), 2,557-lb. (1160 kg) bucket; 16,314-lb. (7400 kg) counterweight; standard gauge; and situated on firm, uniform supporting surface. Total load includes weight of cables, hook, etc. Figures do not exceed 87 percent of hydraulic capacities or 75 percent of weight needed to tip machine. All lift capacities are based on SAE J1097.

Load Point	15 ft. (4.57 m)		20 ft. (6.10 m)		25 ft. (7.62 m)		30 ft. (9.15 m)		35 ft. (10.67 m)	
Height	Over Front	Over Side	Over Front	Over Side	Over Front	Over Side	Over Front	Over Side	Over Front	Over Side
With 13-ft. 1-in. (4.0 m) arm and 32-in. (800 mm) triple semi-grouser shoes										
20 ft. (6.10 m)										
15 ft. (4.57 m)					***14,199 (6441)***	13,721 (6224)	***12,273 (5567)***	9,996 (4534)		
10 ft. (3.05 m)	***26,701 (12 111)***	***26,701 (12 111)***	***19,872 (9014)***	18,786 (8521)	***16,581 (7521)***	12,937 (5868)	***13,451 (6101)***	9,724 (4411)		
5 ft. (1.52 m)	***34,222 (15 523)***	26,533 (12 035)	***24,420 (11 077)***	17,264 (7831)	***19,101 (8664)***	12,116 (5496)	***14,716 (6675)***	9,301 (4219)	***10,208 (4630)***	6,785 (3078)
Ground Line	***27,003 (12 248)***	24,933 (11 310)	***27,623 (12 530)***	16,161 (7331)	19,411 (8805)	11,440 (5189)	14,871 (6745)	8,838 (4009)	11,358 (5152)	6,557 (2974)
–5 ft. (–1.52 m)	***25,662 (11 640)***	24,473 (11 101)	27,191 (12 334)	15,588 (7071)	18,937 (8590)	11,014 (4996)	14,433 (6547)	8,436 (3827)	11,143 (5054)	6,356 (2883)
–10 ft. (–3.05 m)	***28,325 (12 848)***	24,540 (11 131)	27,018 (12 255)	15,438 (7003)	18,768 (8513)	10,862 (4927)	14,147 (6417)	8,174 (3708)		
–15 ft. (–4.57 m)	***32,496 (14 740)***	24,977 (11 329)	***25,622 (11 622)***	15,636 (7092)	18,930 (8587)	11,008 (4993)	14,080 (6387)	8,111 (3679)		
–20 ft. (–6.10 m)	***25,530 (11 580)***	***25,530 (11 580)***	***19,607 (8894)***	16,245 (7369)						
With 10-ft. 6-in. (3.2 m) arm and 32-in. (800 mm) triple semi-grouser shoes										
25 ft. (7.62 m)					***10,000 (4536)***	***10,000 (4536)***				
20 ft. (6.10 m)					***14,638 (6640)***	13,905 (6307)	***9,472 (4296)***	***9,472 (4296)***		
15 ft. (4.57 m)					***16,151 (7326)***	13,371 (6065)	***15,044 (6824)***	9,511 (4314)		
10 ft. (3.05 m)	***32,447 (14 718)***	27,999 (12 700)	***22,606 (10 254)***	18,134 (8226)	***18,339 (8319)***	12,640 (5733)	15,199 (6894)	9,157 (4154)		
5 ft. (1.52 m)			***26,577 (12 055)***	16,793 (7617)	19,917 (9034)	11,915 (5405)	14,777 (6703)	8,768 (3977)		
Ground Line	***19,237 (8726)***	***19,237 (8726)***	27,598 (12 518)	15,968 (7243)	19,313 (8760)	11,372 (5158)	14,439 (6549)	8,458 (3837)		
–5 ft. (–1.52 m)	***18,735 (8498)***	***18,735 (8498)***	27,226 (12 349)	15,646 (7097)	18,999 (8618)	11,091 (5031)	14,276 (6476)	8,309 (3769)		
–10 ft. (–3.05 m)	***24,351 (11 046)***	***24,351 (11 046)***	27,279 (12 374)	15,692 (7118)	18,998 (8617)	11,090 (5030)				
–15 ft. (–4.57 m)	***29,437 (13 353)***	25,623 (11 623)	***23,225 (10 535)***	16,080 (7294)	***17,270 (7834)***	11,462 (5199)				
With 8-ft. 9-in. (2.66 m) arm and 32-in. (800 mm) triple semi-grouser shoes										
20 ft. (6.10 m)					***16,071 (7290)***	13,686 (6208)				
15 ft. (4.57 m)			***20,080 (9108)***	19,184 (8702)	***17,400 (7893)***	13,183 (5980)	15,444 (7005)	9,394 (4261)		
10 ft. (3.05 m)			***24,277 (11 012)***	17,736 (8045)	***19,413 (8806)***	12,487 (5664)	15,127 (6862)	9,103 (4129)		
5 ft. (1.52 m)			***27,773 (12 598)***	16,530 (7498)	19,799 (8981)	11,826 (5364)	14,763 (6696)	8,769 (3978)		
Ground Line			27,493 (12 471)	15,899 (7212)	19,292 (8751)	11,370 (5157)	14,497 (6576)	8,525 (3867)		
–5 ft. (–1.52 m)	***22,873 (10 375)***	***22,873 (10 375)***	27,301 (12 384)	15,733 (7136)	19,086 (8657)	11,185 (5073)	14,446 (6553)	8,478 (3846)		
–10 ft. (–3.05 m)	***19,509 (8849)***	***19,509 (8849)***	***26,307 (11 933)***	15,900 (7212)	19,213 (8715)	11,299 (5125)				
–15 ft. (–4.57 m)	***26,093 (11 836)***	26,088 (11 833)	***20,977 (9515)***	16,439 (7457)						

ATTACHMENT # 1