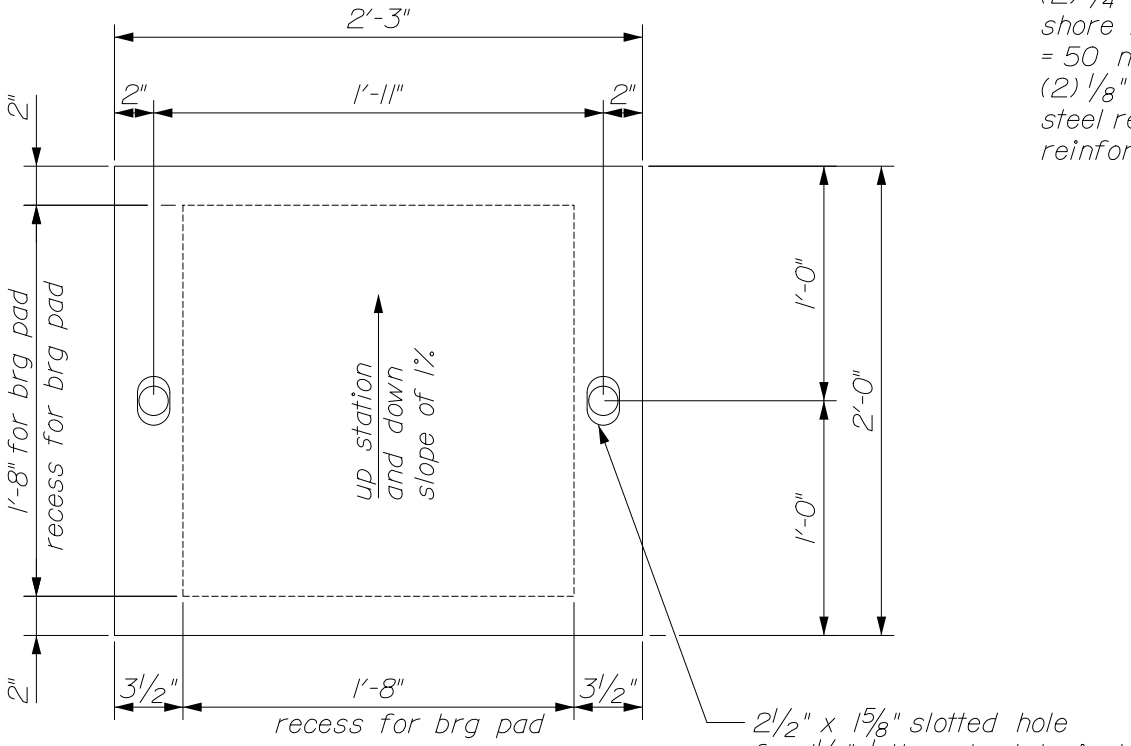

Sole Plate Detail

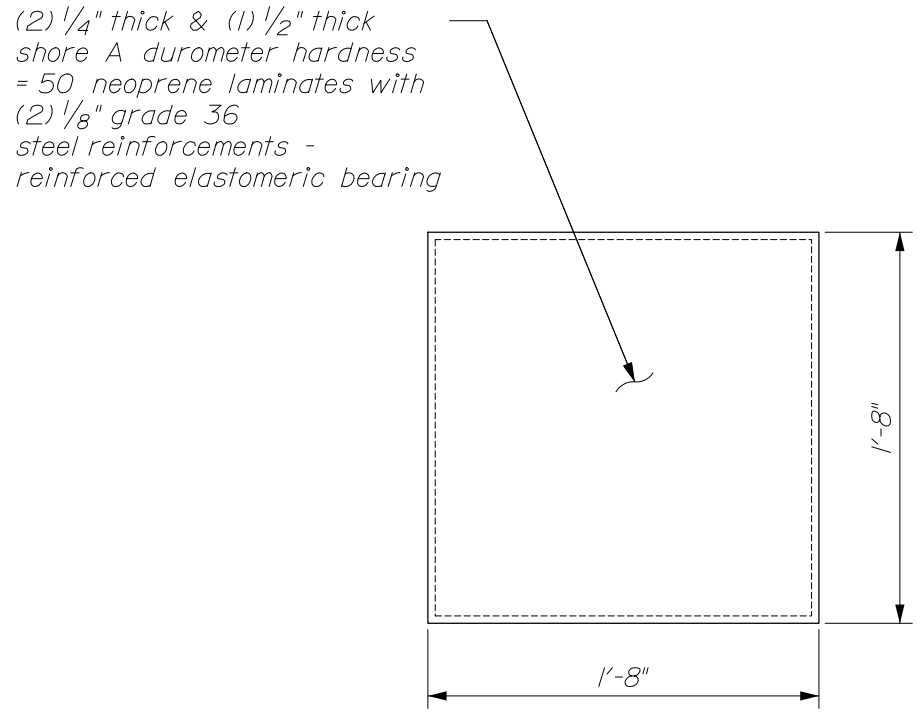

Bearing Pad Plan Detail

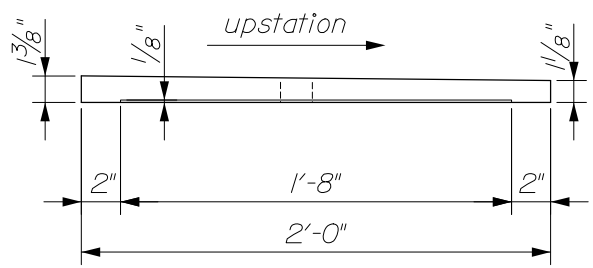

Section thru Sole Plate

Pier Bearings

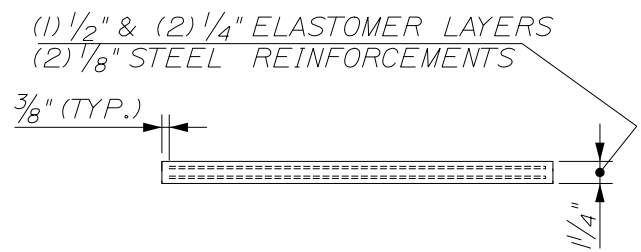

Bearing Pad Elev. Detail