STATE OF VERMONT
AGENCY OF TRANSPORTATION

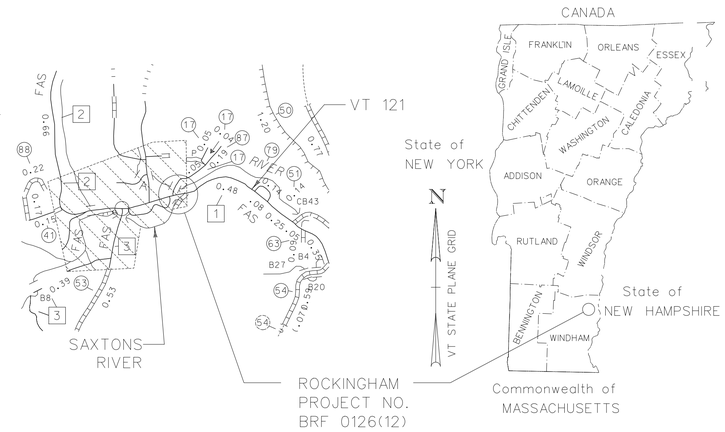

THIS IS A VALUE ENGINEERED PLAN SET. THESE PLANS HAVE BEEN DEVELOPED USING PORTIONS OF THE ORIGINAL VTRANS CONTRACT PLANS FOR BRIDGE NO. 11R, ROCKINGHAM AND MODIFICATIONS MADE BY CALDERWOOD ENGINEERING.
IN ORDER TO PROVIDE A COMPLETE SET PACKAGE FOR RECORD KEEPING PURPOSES AND FOR CONSTRUCT, VTRANS HAS PROVIDED THE ORIGINAL PLAN SET SO THEY COULD BE INCORPORATED WITH THE VALUE ENGINEERED PLANS. REPORT ANY DISCREPANCY BETWEEN THESE PLANS AND THE ACTUAL OBSERVED FIELD CONDITIONS TO THE VALUE ENGINEER OF RECORD IMMEDIATELY.
DO NOT PROCEED WITH ANY DEPENDENT WORK UNTIL SUCH REPORTED DISCREPANCY HAS BEEN RESOLVED TO THE SATISFACTION OF THE VALUE ENGINEER OR RECORD.

PROPOSED IMPROVEMENT
BRIDGE PROJECT
TOWN OF ROCKINGHAM
COUNTY OF WINDHAM
VT 121 (CL 2, TH 1) RURAL MAJOR COLLECTOR
BRIDGE NO. 11R

PROJECT LOCATION: BEGINNING ON VT 121 (CL2, TH 1)(FAS ROUTE S0126) APPROXIMATELY 4.1 MILES WEST OF THE JUNCTION WITH U.S. ROUTE 5 AND 68.0 FEET EAST OF THE JUNCTION WITH OAK STREET AND EXTENDING EASTERLY ALONG VT 121 APPROXIMATELY 243 FEET (0.04 MILES).

PROJECT DESCRIPTION: WORK TO BE PERFORMED UNDER THIS PROJECT INCLUDES REPLACEMENT OF BRIDGE NO. 11R SUPERSTRUCTURE WITH NEW SUPERSTRUCTURE ON EXISTING ALIGNMENT, PARTIAL REMOVAL OF EXISTING ABUTMENTS AND REPLACEMENT WITH NEW ABUTMENTS, REPAIR OF EXISTING PIERS AND CHANNEL WORK WITH OTHER RELATED HIGHWAY ITEMS.

STRUCTURE LENGTH: 202.69 FEET
ROADWAY LENGTH: 40.00 FEET
PROJECT LENGTH: 242.69 FEET

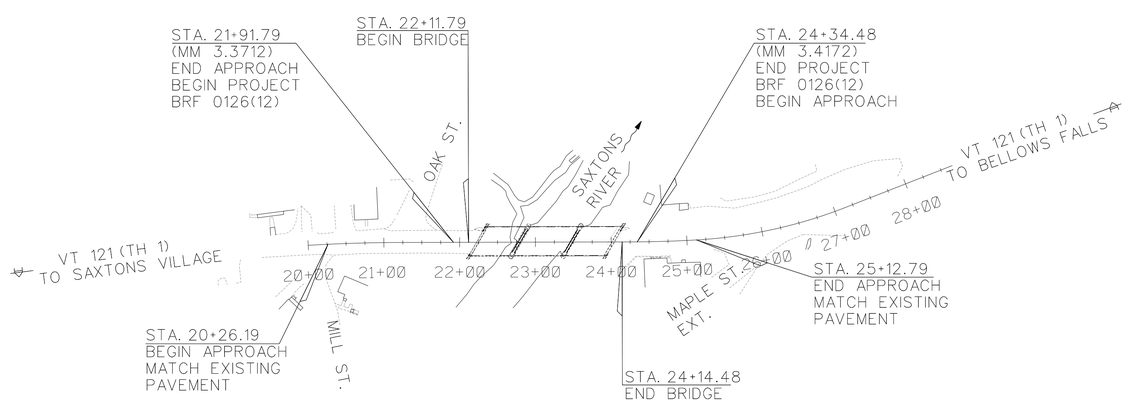

200 0 200
SCALE IN FEET

CONSTRUCTION IS TO BE CARRIED ON IN ACCORDANCE WITH THESE PLANS AND THE STANDARD SPECIFICATIONS FOR CONSTRUCTION DATED 2011, AS APPROVED BY THE FEDERAL HIGHWAY ADMINISTRATION ON JULY 20, 2011 FOR USE ON THIS PROJECT, INCLUDING ALL SUBSEQUENT REVISIONS AND SUCH REVISED SPECIFICATIONS AND SPECIAL PROVISIONS AS ARE INCORPORATED IN THESE PLANS.

QUALITY ASSURANCE PROGRAM : LEVEL2

SURVEYED BY : VERMONT SURVEY & ENGINEERING, INC.
SURVEYED DATE : 12/2010

DATUM
VERTICAL NAVD 88(GEOID09)FT
HORIZONTAL NAD 83 (CORS) sFT

CALDERWOOD ENGINEERING, ETC.
STRUCTURAL ENGINEERING • DETAILING SERVICES
222 RIVER RD, RICHMOND, ME 04357 PH/FX (207)737-2007/(207) 737-2008

PREPARED FOR:
COLD RIVER BRIDGES, LLC

CEE 106-BR-14

P.E. NUMBER

DATE:

	BY	DATE
DESIGN-DETAILED	ETC	2014
CHECKED-REVIEWED		
REVISIONS 1		
REVISIONS 2		
REVISIONS 3		
REVISIONS 4		
FIELD CHANGES		

VE SUPER. DESIGN
ROCKINGHAM VT. BRF 0126 (12)

TITLE SHEET

SHEET NUMBER

1

CALDERWOOD ENGINEERING
222 RIVER ROAD
RICHMOND, ME 04357
PH. (207) 737-2007 FAX (207) 737-2008

NOTES:

1. SLOPE ROUNDING: ALL CUT SLOPES TO BE ROUNDED IN ACCORDANCE WITH STANDARD SHEET B-5.
2. TACK COAT: EMULSIFIED ASPHALT SHALL BE APPLIED TO THE COLD PLANED BITUMINOUS CONCRETE PAVEMENT SURFACE AT THE RATE OF 0.040 GAL./SY. OR AS DIRECTED BY THE ENGINEER. EMULSIFIED ASPHALT SHALL ALSO BE APPLIED BETWEEN ALL LIFTS OF PAVEMENT. THE COST SHALL BE PAID UNDER ITEM 404.65, "EMULSIFIED ASPHALT".

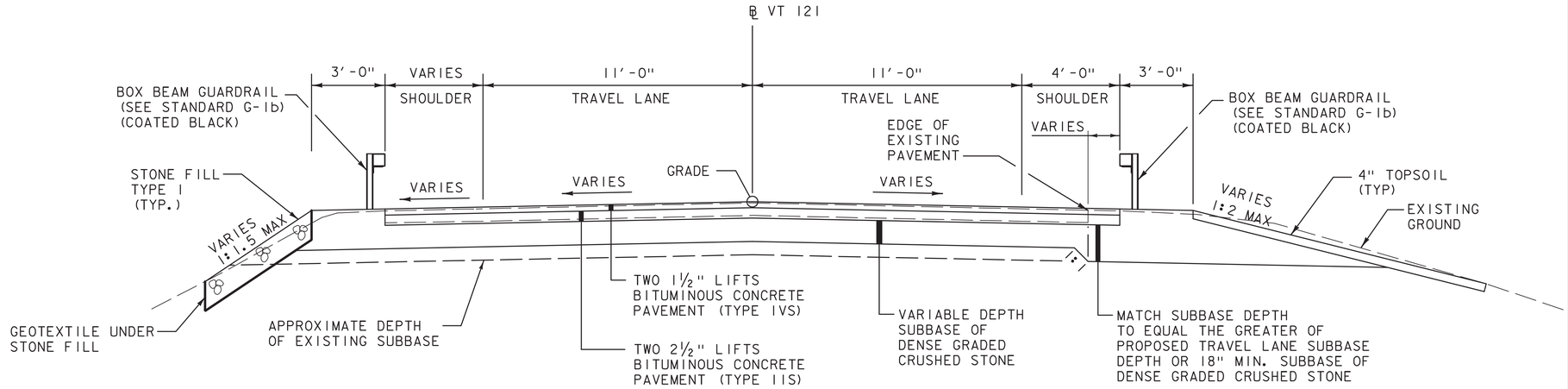

FULL DEPTH TYPICAL ROADWAY SECTION - VT ROUTE 121

STA 21+61.79 TO STA 22+11.79
STA 24+14.48 TO STA 24+62.80

SCALE 3/8" = 1'-0

MATERIAL TOLERANCES

(IF USED ON PROJECT)

	TOTAL DEPTH
SURFACE	+/- 1/4"
- PAVEMENT	+/- 1"
SUBBASE	

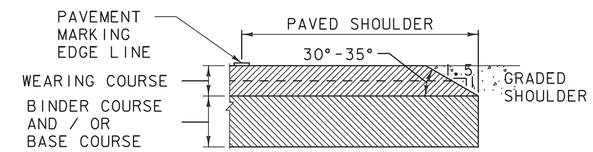

SAFETY EDGE DETAIL

NOT TO SCALE

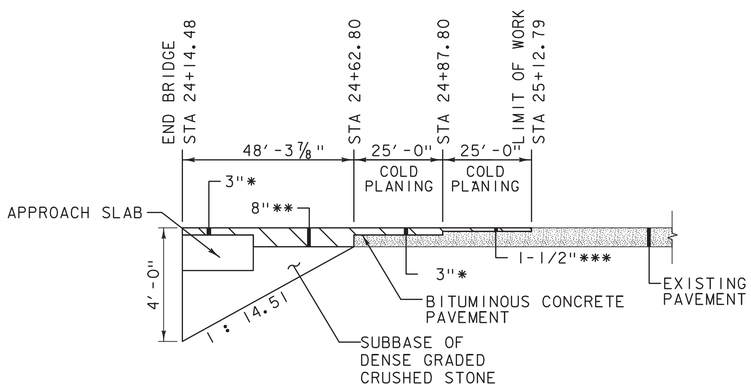

SUBBASE TAPER - EAST APPROACH

ALONG BASELINE
NOT TO SCALE

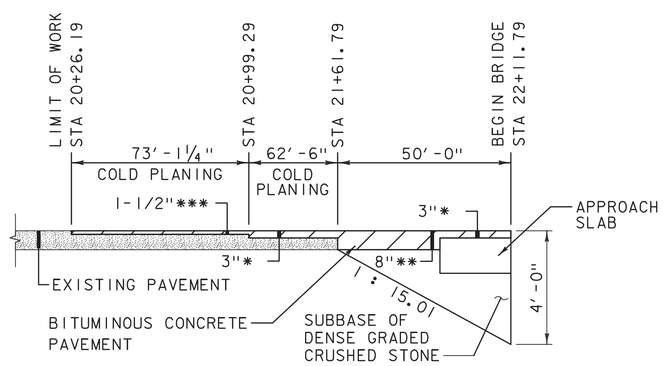

SUBBASE TAPER - WEST APPROACH

ALONG BASELINE
NOT TO SCALE

* TWO 1½" LIFTS BITUMINOUS CONCRETE PAVEMENT (TYPE IVS)

** TWO 1½" LIFTS BITUMINOUS CONCRETE PAVEMENT (TYPE IVS) OVER TWO 2½" LIFTS BITUMINOUS CONCRETE PAVEMENT (TYPE IIS)

*** ONE 1½" LIFT BITUMINOUS CONCRETE PAVEMENT (TYPE IVS)

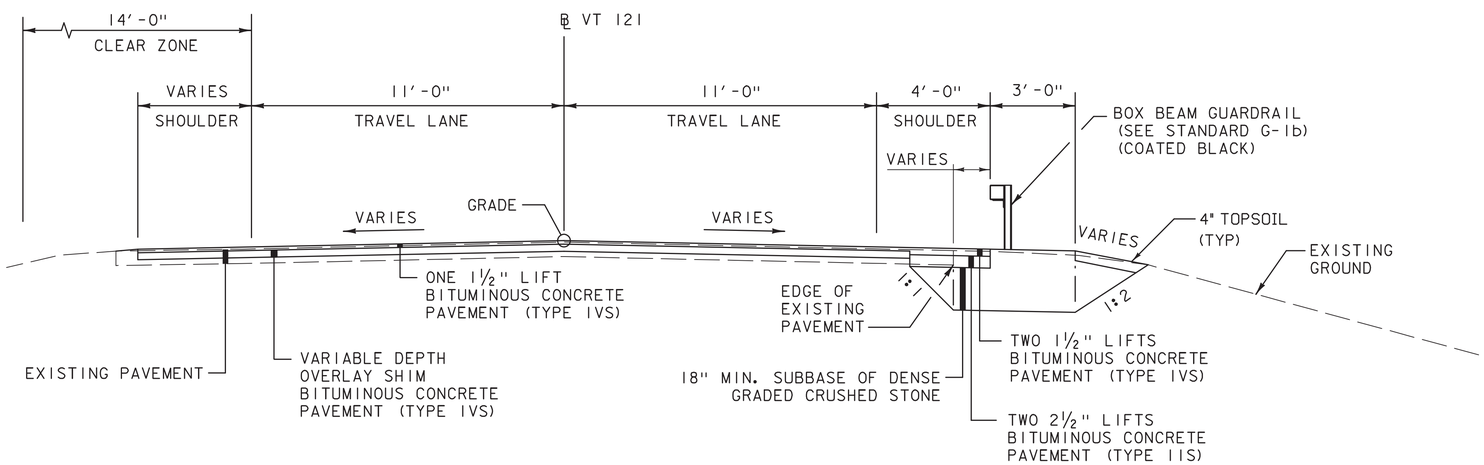

COLD PLANE AND WIDENING TYPICAL ROADWAY SECTION - VT ROUTE 121

STA 20+26.19 TO STA 21+61.79
STA 24+62.80 TO STA 25+12.79

SCALE 3/8" = 1'-0

PROJECT NAME:	ROCKINGHAM
PROJECT NUMBER:	BRF 0126(12)

T·Y·LIN INTERNATIONAL

FILE NAME: z10J072bdr_typ.dgn	PLOT DATE: 7/28/2014
PROJECT LEADER: R. HEBERT	DRAWN BY: C. SARGEANT
DESIGNED BY: C. SARGEANT	CHECKED BY: D. BURHANS
ROADWAY TYPICAL SECTIONS	SHEET 3 OF 69

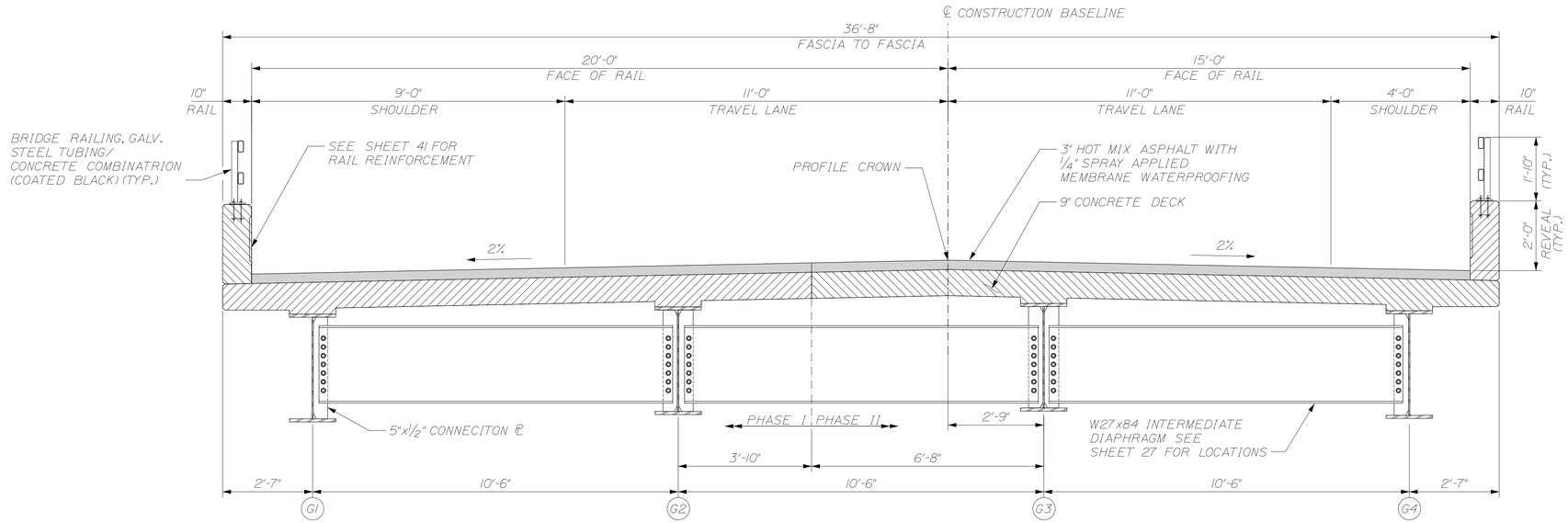

BRIDGE TYPICAL SECTION
1/2" = 1'-0"

CALDERWOOD ENGINEERING, ETC.
STRUCTURAL ENGINEERING • DETAILING SERVICES
222 RIVER RD, RICHMOND, ME 04357 PH/FX (207)737-2007/(207) 737-2008

PREPARED FOR:
COLD RIVER BRIDGES, LLC

CEE 106-BR-14

P.E. NUMBER

DATE:

	BY	DATE
DESIGN-DETAILED	ETC	2014
CHECKED-REVIEWED		
REVISIONS 1		
REVISIONS 2		
REVISIONS 3		
REVISIONS 4		
FIELD CHANGES		

PRELIM VE SUPER. DESIGN
ROCKINGHAM VT. BRF 0126 (12)

TYPICAL SECTION

SHEET NUMBER

4

CALDERWOOD ENGINEERING
222 RIVER ROAD
RICHMOND, ME 04357
PH (207) 737-2007 FAX (207) 737-2008

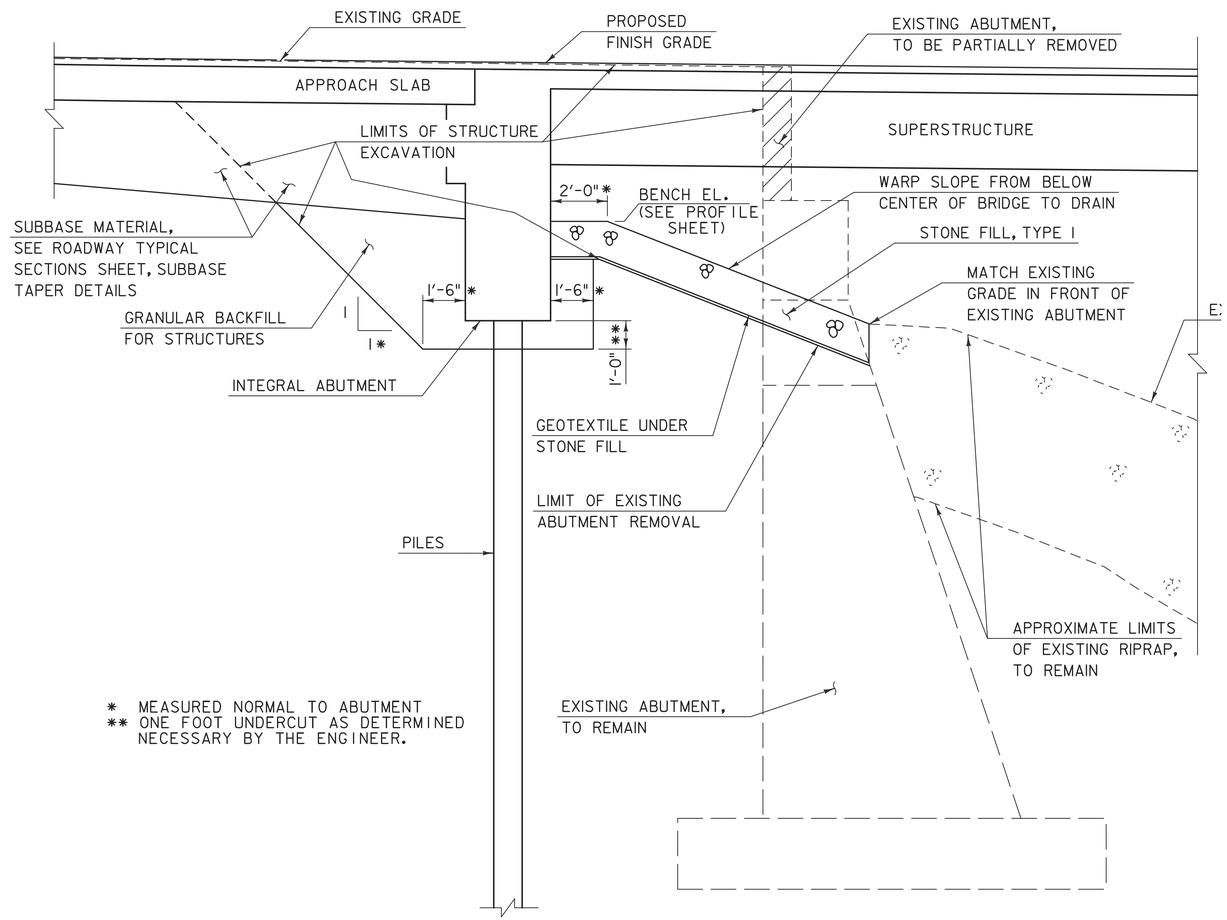

* MEASURED NORMAL TO ABUTMENT
** ONE FOOT UNDERCUT AS DETERMINED NECESSARY BY THE ENGINEER.

TYPICAL ABUTMENT SECTION

SCALE 3/8" = 1'-0"

PROJECT NAME:	ROCKINGHAM
PROJECT NUMBER:	BRF 0126(12)

T·Y·LIN INTERNATIONAL

FILE NAME: z10J072bdr_bew.dgn	PLOT DATE: 7/28/2014
PROJECT LEADER: R. HEBERT	DRAWN BY: S. KELLER
DESIGNED BY: S. KELLER	CHECKED BY: D. MYERS
EARTHWORK TYPICAL SECTIONS	SHEET 5 OF 69

GENERAL INFORMATION

SYMBOLOGY LEGEND NOTE

THE SYMBOLOGY ON THIS SHEET IS INTENDED TO COVER STANDARD CONVENTIONAL SYMBOLOGY. THE SYMBOLOGY IS USED FOR EXISTING & PROPOSED FEATURES WITH HEAVIER LINEWEIGHT, IN COMBINATION WITH PROJECT ANNOTATION, AS NOTED ON PROJECT PLAN SHEETS. THIS LEGEND SHEET COVERS THE BASICS. SYMBOLOGY ON PLANS MAY VARY, PLAN ANNOTATIONS AND NOTES SHOULD BE USED TO CLARIFY AS NEEDED.

R.O.W. ABBREVIATIONS (CODES) & SYMBOLS

POINT	CODE	DESCRIPTION
	CH	CHANNEL EASEMENT
	CONST	CONSTRUCTION EASEMENT
	CUL	CULVERT EASEMENT
	D&C	DISCONNECT & CONNECT
	DIT	DITCH EASEMENT
	DR	DRAINAGE EASEMENT
	DRIVE	DRIVEWAY EASEMENT
	EC	EROSION CONTROL
	HWY	HIGHWAY EASEMENT
	I&M	INSTALL & MAINTAIN EASEMENT
	LAND	LANDSCAPE EASEMENT
	R&RES	REMOVE & RESET
	R&REP	REMOVE & REPLACE
	SR	SLOPE RIGHT
	UE	UTILITY EASEMENT
	(P)	PERMANENT EASEMENT
	(T)	TEMPORARY EASEMENT
■	BNDNS	BOUND SET
⊡	BNDNS	BOUND TO BE SET
●	IPNS	IRON PIN SET
◎	IPNS	IRON PIN TO BE SET
⊠	CALC	EXISTING ROW POINT
○	PROW	PROPOSED ROW POINT
[LENGTH]		LENGTH CARRIED ON NEXT SHEET

COMMON TOPOGRAPHIC POINT SYMBOLS

POINT	CODE	DESCRIPTION
	APL	BOUND APPARENT LOCATION
	BM	BENCH MARK
	BND	BOUND
	CB	CATCH BASIN
	COMB	COMBINATION POLE
	DITHR	DROP INLET THROATED DNC
	EL	ELECTRIC POWER POLE
	FPOLE	FLAGPOLE
	GASFIL	GAS FILLER
	GP	GUIDE POST
	GSO	GAS SHUT OFF
	GUY	GUY POLE
	GUYW	GUY WIRE
	GV	GATE VALUE
	H	TREE HARDWOOD
	HCTRL	CONTROL HORIZONTAL
	HVCTRL	CONTROL HORIZ. & VERTICAL
	HYD	HYDRANT
	IP	IRON PIN
	IPIPE	IRON PIPE
	LI	LIGHT - STREET OR YARD
	MB	MAILBOX
	MH	MANHOLE (MH)
	MM	MILE MARKER
	PM	PARKING METER
	PMK	PROJECT MARKER
	POST	POST STONE/WOOD
	RRSIG	RAILROAD SIGNAL
	RRSL	RAILROAD SWITCH LEVER
	S	TREE SOFTWOOD
	SAT	SATELLITE DISH
	SHRUB	SHRUB
	SIGN	SIGN
	STUMP	STUMP
	TEL	TELEPHONE POLE
	TIE	TIE
	TSIGN	SIGN W/DOUBLE POST
	VCTRL	CONTROL VERTICAL
	WELL	WELL
	WSO	WATER SHUT OFF

THESE ARE COMMON VAOT SURVEY POINT SYMBOLS FOR EXISTING FEATURES, ALSO USED FOR PROPOSED FEATURES WITH HEAVIER LINEWEIGHT, IN COMBINATION WITH PROPOSED ANNOTATION.

PROPOSED GEOMETRY CODES

CODE	DESCRIPTION
PC	POINT OF CURVATURE
PI	POINT OF INTERSECTION
CC	CENTER OF CURVE
PT	POINT OF TANGENCY
PCC	POINT OF COMPOUND CURVE
PRC	POINT OF REVERSE CURVE
POB	POINT OF BEGINNING
POE	POINT OF ENDING
STA	STATION PREFIX
AH	AHEAD STATION SUFFIX
BK	BACK STATION SUFFIX
D	CURVE DEGREE OF (100FT)
R	CURVE RADUIS OF
T	CURVE TANGENT LENGTH
L	CURVE LENGTH OF
E	CURVE EXTERNAL DISTANCE

UTILITY SYMBOLOGY

UNDERGROUND UTILITIES

UT	TELEPHONE
UE	ELECTRIC
UC	CABLE (TV)
UEC	ELECTRIC+CABLE
UET	ELECTRIC+TELEPHONE
UCT	CABLE+TELEPHONE
UECT	ELECTRIC+CABLE+TELEP.
G	GAS LINE
W	WATER LINE
S	SANITARY SEWER (SEPTIC)

ABOVE GROUND UTILITIES (AERIAL)

T	TELEPHONE
E	ELECTRIC
C	CABLE (TV)
EC	ELECTRIC+CABLE
ET	ELECTRIC+TELEPHONE
AER E&T	ELECTRIC+TELEPHONE
CT	CABLE+TELEPHONE
ECT	ELECTRIC+CABLE+TELEP.
	UTILITY POLE GUY WIRE

PROJECT CONSTRUCTION SYMBOLOGY

PROJECT DESIGN & LAYOUT SYMBOLOGY

CZ	CLEAR ZONE
	PLAN LAYOUT MATCHLINE

PROJECT CONSTRUCTION FEATURES

	TOP OF CUT SLOPE
	TOE OF FILL SLOPE
	STONE FILL
	BOTTOM OF DITCH ℄
	CULVERT PROPOSED
	STRUCTURE SUBSURFACE
PDF PDF	PROJECT DEMARCATION FENCE
BF BF	BARRIER FENCE
	TREE PROTECTION ZONE (TPZ)
	STRIPING LINE REMOVAL
	SHEET PILES

CONVENTIONAL BOUNDARY SYMBOLOGY

BOUNDARY LINES

TOWN LINE	TOWN BOUNDARY LINE
COUNTY LINE	COUNTY BOUNDARY LINE
STATE LINE	STATE BOUNDARY LINE
	PROPOSED STATE R.O.W. (LIMITED ACCESS)
	PROPOSED STATE R.O.W.
	STATE ROW (LIMITED ACCESS)
	STATE ROW
	TOWN ROW
	PERMANENT EASEMENT LINE (P)
	TEMPORARY EASEMENT LINE (T)
	SURVEY LINE
P L P L	PROPERTY LINE (P/L)
SR SR SR	SLOPE RIGHTS
6f 6f	6F PROPERTY BOUNDARY
4f 4f	4F PROPERTY BOUNDARY
HAZ HAZ	HAZARDOUS WASTE

EPSC LAYOUT PLAN SYMBOLOGY

EPSC MEASURES

	FILTER CURTAIN
	SILT FENCE
	SILT FENCE WOVEN WIRE
	CHECK DAM
	DISTURBED AREAS REQUIRING RE-VEGETATION
	EROSION MATTING
ARCH	AREA OF ARCHAEOLOGICAL SIGNIFICANCE
	STABILIZED CONSTRUCTION ENTRANCE
	SURFACE ROUGHENING

ENVIRONMENTAL RESOURCES

	WETLAND BOUNDARY
	RIPARIAN BUFFER ZONE
	WETLAND BUFFER ZONE
	SOIL TYPE BOUNDARY
T&E	THREATENED & ENDANGERED SPECIES
HAZ HAZ	HAZARDOUS WASTE AREA
AG	AGRICULTURAL LAND
HABITAT	FISH & WILDLIFE HABITAT
FLOOD PLAIN	FLOOD PLAIN
OHW	ORDINARY HIGH WATER (OHW)
	STORM WATER
	USDA FOREST SERVICE LANDS
	WILDLIFE HABITAT SUIT/CONN

ARCHEOLOGICAL & HISTORIC

ARCH	ARCHEOLOGICAL BOUNDARY
HISTORIC DIST	HISTORIC DISTRICT BOUNDARY
HISTORIC	HISTORIC AREA
H	HISTORIC STRUCTURE

CONVENTIONAL TOPOGRAPHIC SYMBOLOGY

EXISTING FEATURES

	ROAD EDGE PAVEMENT
	ROAD EDGE GRAVEL
	DRIVEWAY EDGE
	DITCH
	FOUNDATION
	FENCE (EXISTING)
	FENCE WOOD POST
	FENCE STEEL POST
	GARDEN
	ROAD GUARDRAIL
	RAILROAD TRACKS
	CULVERT (EXISTING)
	STONE WALL
	WALL
	WOOD LINE
	BRUSH LINE
	HEDGE
	BODY OF WATER EDGE
	LEDGE EXPOSED

PROJECT NAME: ROCKINGHAM
PROJECT NUMBER: BRF 0126(12)

FILE NAME: z10J072bdr_legend.dgn
PROJECT LEADER: R. HEBERT
DESIGNED BY: R. HEBERT
CONVENTIONAL SYMBOLOGY LEGEND

PLOT DATE: 7/28/2014
DRAWN BY: S. MORGAN
CHECKED BY: R. HEBERT
SHEET 6 OF 69

STATE OF VERMONT
AGENCY OF TRANSPORTATION

QUANTITY SHEET 1

SUMMARY OF ESTIMATED QUANTITIES									TOTALS		DESCRIPTIONS			
ROADWAY	TRAINING	EROSION CONTROL	BRIDGE	FULL C.E. ITEMS	GRAND TOTAL	FINAL	UNIT	ITEMS	ITEM NUMBER	ROUND
1					1		LS	CLEARING AND GRUBBING, INCLUDING INDIVIDUAL TREES AND STUMPS	201.10	
620					620		CY	COMMON EXCAVATION	203.15	
20					20		CY	SOLID ROCK EXCAVATION	203.16	
20					20		CY	SAND BORROW	203.31	
20					20		CY	TRENCH EXCAVATION OF EARTH, EXPLORATORY (N.A.B.I.)	204.22	
			635		635		CY	STRUCTURE EXCAVATION	204.25	
			130		130		CY	GRANULAR BACKFILL FOR STRUCTURES	204.30	
625					625		SY	COLD PLANING-BIT.PAVEMENT	210.10	
450					450		CY	SUBBASE OF DENSE GRADED CRUSHED STONE	301.35	
4.8			1.8		6.6		CWT	EMULSIFIED ASPHALT	404.65	
1					1		LU	PRICE ADJUSTMENT, ASPHALT CEMENT (N.A.B.I.)	406.50	
			56		56		CY	CONCRETE, HIGH PERFORMANCE CLASS A	501.33	
			124		124		CY	CONCRETE, HIGH PERFORMANCE CLASS B	501.34	
			1		1		LS	FURNISHING EQUIPMENT FOR DRIVING PILING	504.10	
			960		960		LF	STEEL PILING, HP 10 X 57	505.12	
			2740		2740		SF	TEMPORARY STEEL SHEET PILING	505.36	
			2		2		EACH	DYNAMIC PILE LOADING TEST	505.45	
			8200		8200		LB	REINFORCING STEEL, LEVEL I	507.11	
			21500		21500		LB	REINFORCING STEEL, LEVEL II	507.12	
			384		384		LF	DRILLING AND GROUTING DOWELS	507.16	
			84		84		EACH	MECHANICAL BAR CONNECTOR	507.19	
			80		80		GAL	WATER REPELLENT, SILANE	514.10	
			82		82		LF	BRIDGE EXPANSION JOINT, ASPHALTIC PLUG	516.10	
			790		790		SY	MEMBRANE WATERPROOFING, SPRAY APPLIED	520.10	
			82		82		LF	JOINT SEALER, HOT POURED	524.11	
			406		406		LF	BRIDGE RAILING, GALVANIZED STEEL TUBING/CONCRETE COMBINATION (COATED BLACK)	525.45	
			1		1		LS	MAINTENANCE OF STRUCTURES AND APPROACHES	527.10	
			600		600		SY	REMOVAL OF BRIDGE PAVEMENT	529.10	
			1		1		EACH	PARTIAL REMOVAL OF STRUCTURE	529.20	
			8		8		EACH	BEARING DEVICE ASSEMBLY, STEEL REINFORCED ELASTOMERIC PAD	531.17	
			50		50		SY	REPAIR OF CONCRETE SUBSTRUCTURE SURFACE, CLASS I	580.13	
			8		8		SY	REPAIR OF CONCRETE SUBSTRUCTURE SURFACE, CLASS II	580.14	
			2		2		CY	REPAIR OF CONCRETE SUBSTRUCTURE SURFACE, CLASS III	580.15	
		20			20		HR	POWER GRADER RENTAL	608.15	
		20			20		HR	ALL PURPOSE EXCAVATOR RENTAL, TYPE I	608.25	
		20			20		HR	TRUCK RENTAL	608.37	
		20			20		HR	LOADER RENTAL, TYPE I	608.40	
40					40		MGAL	DUST CONTROL WITH WATER	609.10	
50			50		100		CY	STONE FILL, TYPE I	613.10	

DETAILED SUMMARY OF QUANTITIES

QUANTITIES	UNIT	ITEMS
		507.11 REINFORCING STEEL, LEVEL I
8200	LB	APPROACH SLAB
8200	LB	TOTAL
		507.12 REINFORCING STEEL, LEVEL II
11720	LB	DECK CLOSURE POURS
1340	LB	DIAPHRAMS
7110	LB	ABUTMENTS
1330	LB	PIERS
21500	LB	TOTAL

CALDERWOOD ENGINEERING, ETC.
STRUCTURAL ENGINEERING • DETAILING SERVICES
222 RIVER RD, RICHMOND, ME 04357 PH/FX (207)737-2007/(207) 737-2008

PREPARED FOR:
COLD RIVER BRIDGES, LLC

CEE 106-BR-14

P.E. NUMBER

DATE:

	BY	DATE
DESIGN-DETAILED	ETC	2014
CHECKED-REVIEWED		
REVISIONS 1		
REVISIONS 2		
REVISIONS 3		
REVISIONS 4		
FIELD CHANGES		

VE SUPER. DESIGN
ROCKINGHAM VT. BRF 0126 (12)

QUANTITY SHEET #1

SHEET NUMBER

7

CALDERWOOD ENGINEERING
222 RIVER ROAD
RICHMOND, ME 04357
PH. (207) 737-2007 FAX (207) 737-2008

STATE OF VERMONT
AGENCY OF TRANSPORTATION

QUANTITY SHEET 2

SUMMARY OF ESTIMATED QUANTITIES					TOTALS		DESCRIPTIONS			
ROADWAY	TRAINING	EROSION CONTROL	BRIDGE	FULL C.E. ITEMS	GRAND TOTAL	FINAL	UNIT	ITEMS	ITEM NUMBER	ROUND
440					440		LF	BOX BEAM GUARDRAIL (COATED BLACK)	621.30	
1					1		EACH	MANUFACTURED TERMINAL SECTION, TANGENT (COATED BLACK)	621.51	
4					4		EACH	ENERGY ABSORPTION ATTENUATOR	621.56	
4					4		EACH	GUARDRAIL APPROACH SECTION, GALVANIZED 2 RAIL BOX BEAM (COATED BLACK)	621.72	
570					570		LF	REMOVAL AND DISPOSAL OF GUARDRAIL	621.80	
380					380		LF	TEMPORARY TRAFFIC BARRIER	621.90	
360					360		LF	REMOVE AND RESET TEMPORARY TRAFFIC BARRIER	621.95	
160					160		HR	UNIFORMED TRAFFIC OFFICERS	630.10	
500					500		HR	FLAGGERS	630.15	
				1	1		LS	FIELD OFFICE-ENGINEERS	631.10	
				1	1		LS	TESTING EQUIPMENT, CONCRETE	631.16	
				1	1		LS	TESTING EQUIPMENT, BITUMINOUS	631.17	
				3000	3000		DL	FIELD OFFICE TELEPHONE (N.A.B.I.)	631.26	
	520				520		HR	EMPLOYEE TRAINEESHIP	634.10	
1					1		LS	MOBILIZATION / DEMOBILIZATION	635.11	
1					1		LS	TRAFFIC CONTROL	641.10	
2					2		EACH	PORTABLE CHANGEABLE MESSAGE SIGN	641.15	
960					960		LF	DURABLE 4 INCH WHITE LINE	646.400	
900					900		LF	DURABLE 4 INCH YELLOW LINE	646.410	
570					570		LF	DURABLE 12 INCH WHITE LINE	646.460	
20					20		LF	DURABLE 24 INCH STOP BAR	646.480	
4					4		EACH	DURABLE LETTER OR SYMBOL	646.490	
130			150		280		SY	GEOTEXTILE UNDER STONE FILL	649.31	
		180			180		SY	GEOTEXTILE FOR SILT FENCE	649.51	
		18			18		LB	SEED	651.15	
		10			10		LB	SEED, WINTER RYE	651.17	
		55			55		LB	FERTILIZER	651.18	
		0.25			0.25		TON	AGRICULTURAL LIMESTONE	651.20	
		0.25			0.25		TON	HAY MULCH	651.25	
60					60		CY	TOPSOIL	651.35	
		1			1		LS	EROSION PREVENTION & SEDIMENT CONTROL PLAN	652.10	
		80			80		HR	MONITORING EROSION PREVENTION & SEDIMENT CONTROL PLAN	652.20	
		1			1		LU	MAINTENANCE OF EROSION PREVENTION & SEDIMENT CONTROL PLAN (N.A.B.I.)	652.30	
		180			180		SY	TEMPORARY EROSION MATTING	653.20	
		30			30		CY	VEHICLE TRACKING PAD	653.35	
		310			310		LF	BARRIER FENCE	653.50	
		220			220		LF	PROJECT DEMARCATION FENCE	653.55	
10					10		SF	TRAFFIC SIGNS, TYPE A	675.20	
60					60		LF	SQUARE TUBE SIGN POST AND ANCHOR	675.341	
4					4		EACH	REMOVING SIGNS	675.50	

DETAILED SUMMARY OF QUANTITIES		
QUANTITIES	UNIT	ITEMS

PROJECT NAME: **ROCKINGHAM**
PROJECT NUMBER: **BRF 0126(12)**

FILE NAME: **z10j072bdr_qnty.xlsm** PLOT DATE: **07/28/2014**
PROJECT LEADER: **R. HEBERT** DRAWN BY: **D. BURHANS**
DESIGNED BY: **D. BURHANS** CHECKED BY: **R. HEBERT**
QUANTITY SHEET #2 SHEET **8** OF **69**

STATE OF VERMONT
AGENCY OF TRANSPORTATION

QUANTITY SHEET 3

SUMMARY OF ESTIMATED QUANTITIES																			TOTALS		DESCRIPTIONS			
										ROADWAY		TRAINING		EROSION CONTROL		BRIDGE		FULL C.E. ITEMS	GRAND TOTAL	FINAL	UNIT	ITEMS	ITEM NUMBER	ROUND
										2									2		EACH	ERECTING SALVAGED SIGNS	675.60	
										1									1		EACH	TEMPORARY TRAFFIC SIGNAL SYSTEM	678.40	
										3									3		EACH	TEMPORARY DETECTOR	678.42	
																30			30		CY	SPECIAL PROVISION (HIGH PERFORMANCE CONCRETE, RAPID SET)	900.608	
																1			1		LS	SPECIAL PROVISION (CONSTRUCTION VIBRATION AND CRACK MONITORING)	900.645	
										1									1		LU	SPECIAL PROVISION (MAT DENSITY PAY ADJUSTMENT, SMALL QUANTITY) (N.A.B.I.)	900.650	
										1									1		LU	SPECIAL PROVISION (MIXTURE PAY ADJUSTMENT)(N.A.B.I.)	900.650	
										280						140			420		TON	SPECIAL PROVISION (BITUMINOUS CONCRETE PAVEMENT, SMALL QUANTITY)	900.680	

DETAILED SUMMARY OF QUANTITIES		
QUANTITIES	UNIT	ITEMS

CALDERWOOD ENGINEERING, ETC.
STRUCTURAL ENGINEERING • DETAILING SERVICES
222 RIVER RD, RICHMOND, ME 04357 PH/FX (207) 737-2007/(207) 737-2008

PREPARED FOR:
COLD RIVER BRIDGES, LLC

CEE 106-BR-14

P.E. NUMBER

DATE:

	BY	DATE
DESIGN-DETAILED	ETC	2014
CHECKED-REVIEWED		
REVISIONS 1		
REVISIONS 2		
REVISIONS 3		
REVISIONS 4		
FIELD CHANGES		

VE SUPER. DESIGN
ROCKINGHAM VT. BRF 0126 (12)

QUANTITY SHEET #1

SHEET NUMBER

9

CALDERWOOD ENGINEERING
222 RIVER ROAD
RICHMOND, ME 04357
PH. (207) 737-2007 FAX (207) 737-2008

GPS/NGS CONTROL POINTS

SPRINGFIELD VT CORS ARP

PID DJ8961
N = 284807.69
E = 1646390.48
ELLIP HEIGHT = 513.30

STATION IS A GPS CONTINOUSLY OPERATING REFERENCE STATION. STATION IS THE ANTENNA REFERENCE POINT OF THE GPS ANTENNA. LOCATED AT THE SPRINGFIELD, VERMONT HIGH SCHOOL, THE MONUMENT IS ATTACHED TO A TWO STORY CONCRETE & BRICK BUILDING WITH AN 8 FT CONCRETE FOUNDATION BUILT IN 1967. THE MAST IS A 1.75 INCH DIA. GALV PIPE THAT IS 108 INCHES LONG. THE MAST IS ATTACHED TO A STEEL MOUNTING FRAME WITH THREE ATTACHMENTS CONSISTING OF 3/8 INCH SS THROUGH BOLTS. THE MOUNTING FRAME IS ATTACHED TO THE BUILDING USING 8 ATTACHMENT POINTS. THE TOP 2 AND THIRD 2 ARE 1/2 INCH SS BOLTS SECURED TO THE BRICK OR CONC WITH LEAD ANCHORS. THE SECOND 2 AND BOTTOM 2 ATTACHMENTS ARE THROUGH BOLTED AND CONSIST OF 1/2 INCH SS THREADED ROD AND NUTS.

TRAVERSE TIES

HVCTRL #2 — 5/8"REBAR SET 0.1'BG W/ CENTER PUNCH MARK

NORTH = 233073.66
EAST = 1639680.82
ELEV. = 451.46

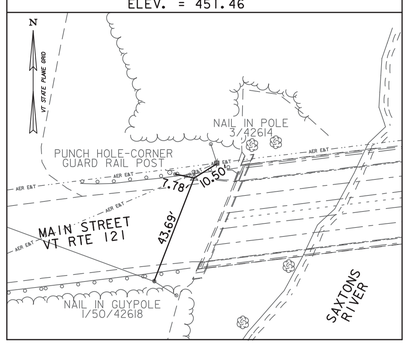

HVCTRL #3 — 5/8"REBAR SET 0.1'BG W/ CENTER PUNCH MARK

NORTH = 233098.21
EAST = 1640085.63
ELEV. = 447.89

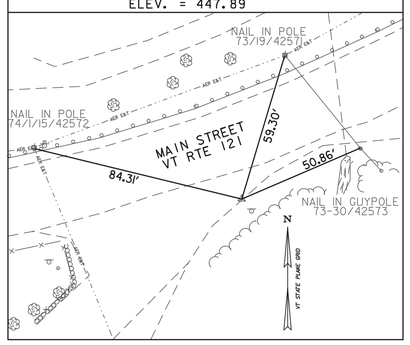

* MAIN TRAVERSE COMPLETED: DECEMBER 1, 2011 BY VSE, M. HUDSON-PC, M. YEFCHAK

ALIGNMENT TIES

POE 25+30.90

NORTH = 233098.37
EAST = 1639996.57

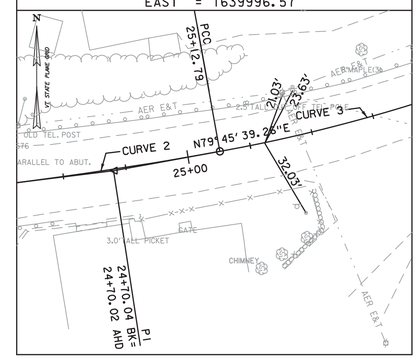

ALIGNMENT TIES

POB 20+00.00

NORTH = 233026.11
EAST = 1639470.70

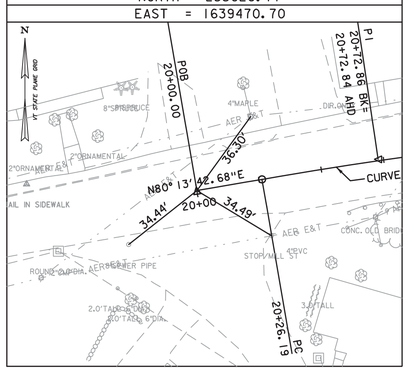

PC 20+26.19

NORTH = 233030.55
EAST = 1639496.51

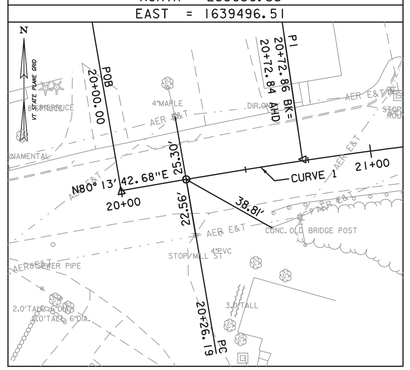

PT 21+19.51

NORTH = 233044.24
EAST = 1639588.82

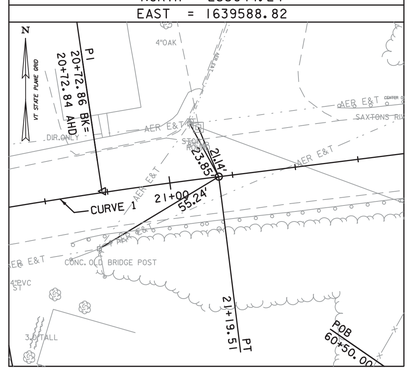

PC 24+27.26

NORTH = 233082.27
EAST = 1639894.21

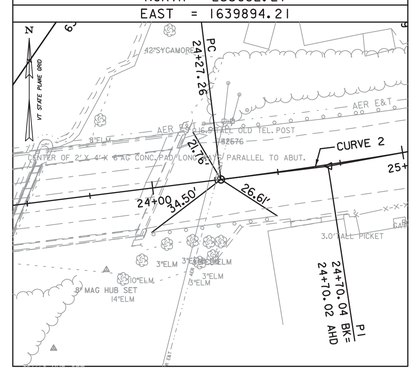

PT 25+12.79

NORTH = 233095.15
EAST = 1639978.75

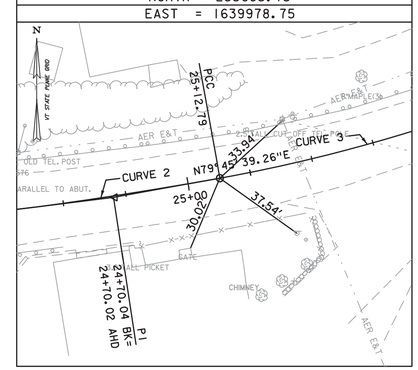

DATUM	
VERTICAL	NAVD 88(GEOID09) FT
HORIZONTAL	NAD 83(CORS) sFT
ADJUSTMENT	LSQ

VERMONT SURVEY AND ENGINEERING

PROJECT NAME: ROCKINGHAM
PROJECT NUMBER: BRF 0126(12)

FILE NAME: z10J072bdr_t1.dgn
PROJECT LEADER: R. HEBERT
DESIGNED BY: D. BURHANS
TIE SHEET

PLOT DATE: 7/28/2014
DRAWN BY: D. BURHANS
CHECKED BY: R. HEBERT
SHEET 11 OF 69

GUARDRAIL APPROACH SECTION, GALVANIZED 2 RAIL BOX BEAM (COATED BLACK)

21+69.32, RT - 22+03.33, RT
21+90.01, LT - 22+24.01, LT
24+05.15, RT - 24+38.98, RT
24+25.84, LT - 24+60.21, LT

BRIDGE RAILING, GALVANIZED STEEL TUBING/CONCRETE COMBINATION (COATED BLACK)

22+03.33, RT - 24+05.15, RT
22+24.01, LT - 24+25.84, LT

DURABLE 4" YELLOW LINE

20+26.19 - 21+12.28 (CENTERLINE)
21+52.28 - 25+12.79 (CENTERLINE)

DURABLE 4" WHITE LINE

20+26.19, LT - 21+20.38, LT (EDGELINE)
20+26.19, RT - 25+12.79, RT (EDGELINE)
21+57.35, LT - 25+12.79, LT (EDGELINE)

TOPSOIL AND SEED

20+22.97, RT - 22+15.91, RT
21+60.36, LT - 22+39.94, LT
23+89.09, RT - 24+24.63, RT
24+12.74, LT - 24+62.45, LT

REMOVAL AND DISPOSAL OF GUARDRAIL

21+69.52, LT - 22+31.98, LT
20+57.50, RT - 22+08.42, RT
24+18.55, LT - 24+62.21, LT
23+97.48, RT - 24+47.48, RT

DURABLE 24 INCH STOP BAR

21+15.37, LT - 21+35.37, LT

DURABLE LETTER OR SYMBOL

21+28.00, LT (STOP)

DURABLE 12 INCH WHITE LINE

21+69.09, LT - 25+09.76, LT (DIAGONAL STRIPING)

MANUFACTURED TERMINAL SECTION, TANGENT (COATED BLACK)

20+50.69, 16.00', RT - 21+00.21, 15.50' RT

BOX BEAM GUARDRAIL (COATED BLACK)

21+67.88, LT - 21+78.01, LT (30' RADIUS)
21+78.01, LT - 21+90.01, LT
21+00.21, RT - 21+19.51, RT
21+19.51, RT - 21+51.32, RT
21+51.32, RT - 21+69.32, RT
24+60.21, LT - 24+96.97, LT
24+96.97, LT - 27+15.01, LT
27+15.01, LT - 27+83.30, LT
27+83.30, LT - 28+01.09, LT (20' RADIUS)
24+38.98, RT - 24+43.76, RT

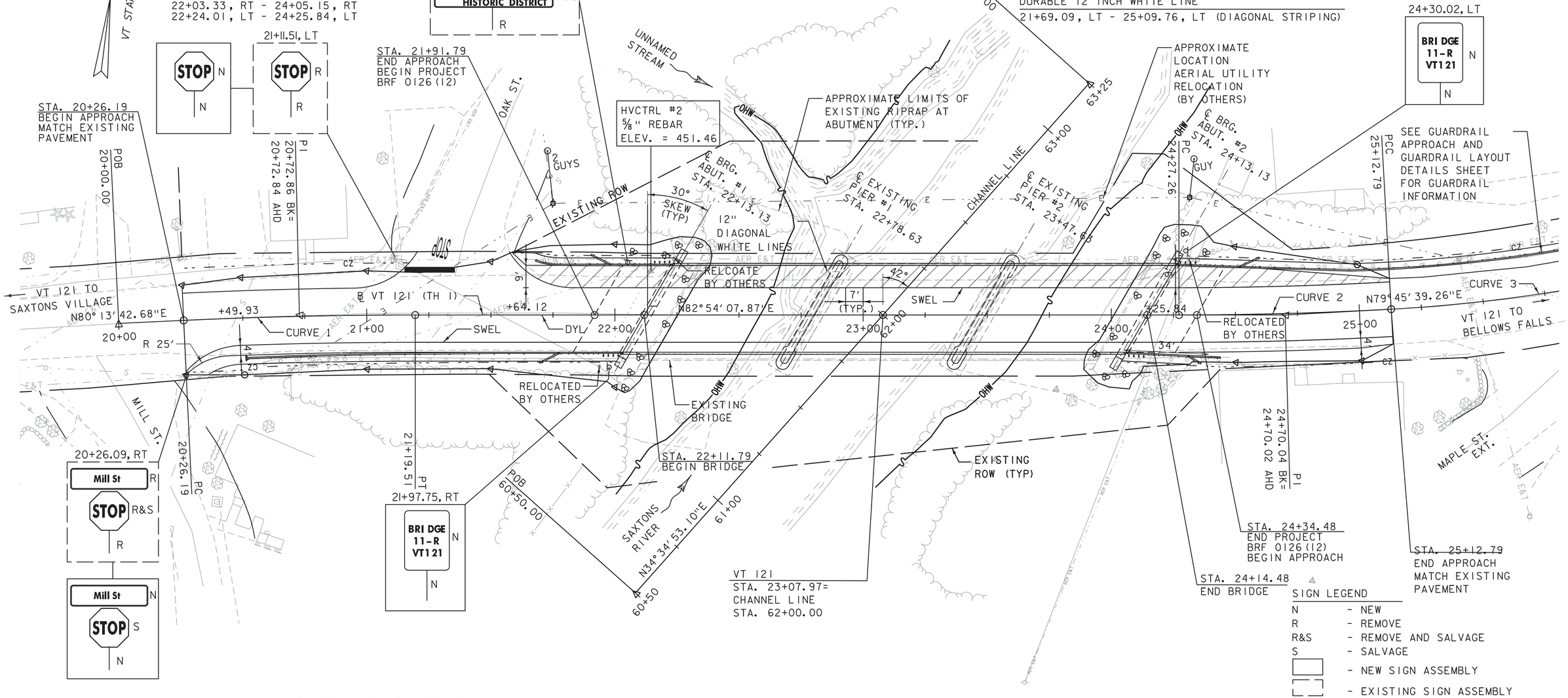

SIGN LEGEND

N - NEW
R - REMOVE
R&S - REMOVE AND SALVAGE
S - SALVAGE
- NEW SIGN ASSEMBLY
- EXISTING SIGN ASSEMBLY

STRIPING LEGEND

DYL - 4" DOUBLE YELLOW LINE
SWEL- 4" SOLID WHITE EDGE LINE

EXISTING BRIDGE INFORMATION

BUILT 1954
CONTINUOUS, STEEL BEAM, CONCRETE DECK
3 SPANS @ 55.00', 69.00', AND 55.00'
30'-0" ROADWAY (CURB TO CURB)
CONCRETE POST AND STEEL RAILING

CURVE (1)
PI STA. = 20+72.86
DELTA = 2°40'25"
D = 2°51'53"
R = 2000.00'
T = 46.67'
L = 93.33'
E = 0.54'

CURVE (2)
PI STA. = 24+70.04
DELTA = 3°08'29"
D = 3°40'22"
R = 1560.00'
T = 42.77'
L = 85.53'
E = 0.59'

CURVE (3)
PI STA. = 26+14.75
DELTA = 18°06'13"
D = 8°57'09"
R = 640.00'
T = 101.96'
L = 202.22'
E = 8.07'

SCALE 1" = 20'-0"
20 0 20

DATUM
VERTICAL NAVD 88(GEOID09) FT
HORIZONTAL NAD 83(CORS) sFT
ADJUSTMENT LSQ

PROJECT NAME: ROCKINGHAM
PROJECT NUMBER: BRF 0126(12)

T·Y·LIN INTERNATIONAL

FILE NAME: z10J072bdr_nul.dgn
PROJECT LEADER: R. HEBERT
DESIGNED BY: D. BURHANS
LAYOUT SHEET

PLOT DATE: 7/28/2014
DRAWN BY: D. BURHANS
CHECKED BY: D. BRYANT
SHEET 12 OF 69

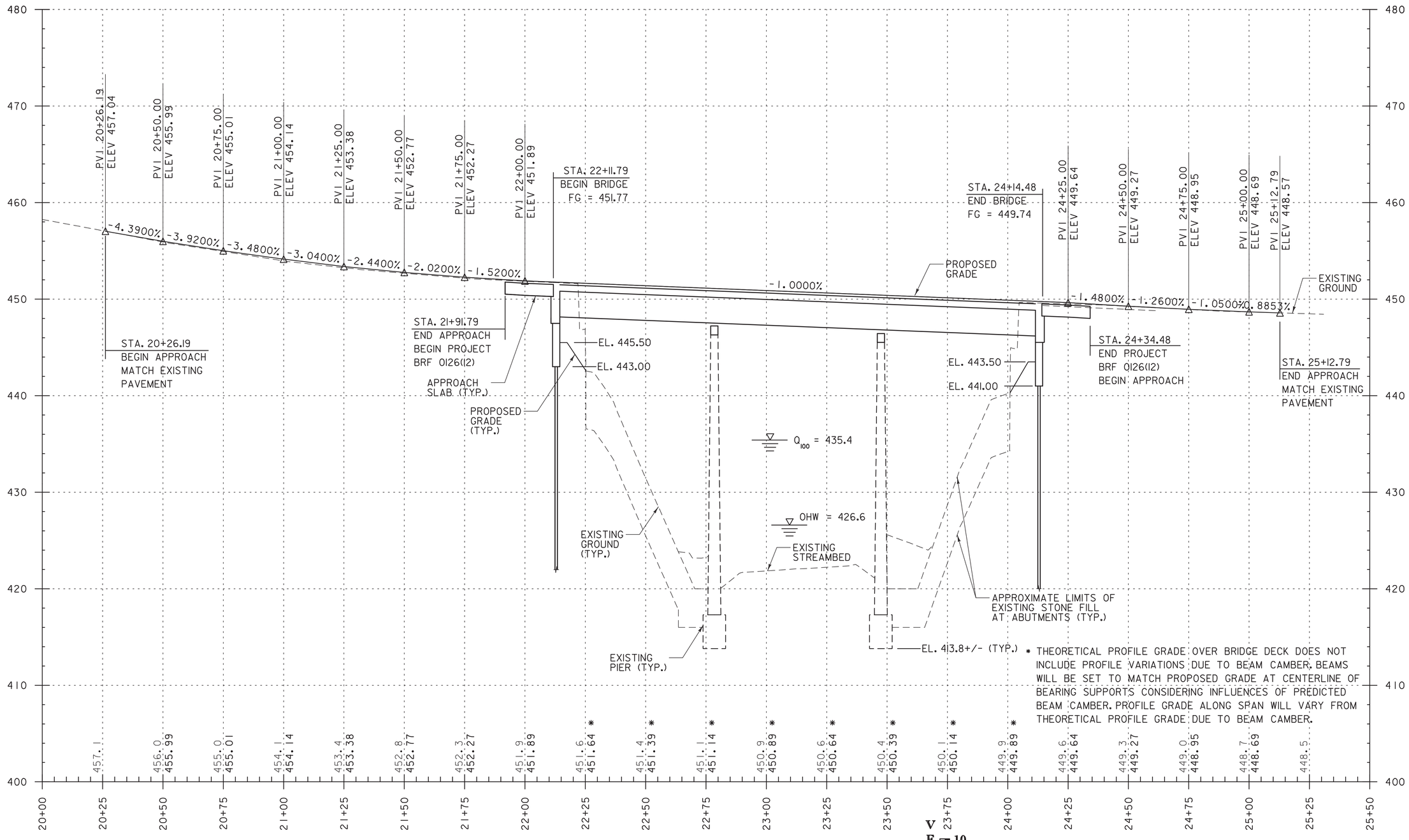

PROFILE: VT ROUTE 121

SCALES:
HORIZ: 1"= 20'
VERT: 1"= 5'

HORIZONTAL 0 20 40 60 SCALE IN FEET

VERTICAL 0 5 10

THE GRADES SHOWN TO THE NEAREST TENTH ARE THE ORIGINAL GROUND ELEVATIONS ALONG THE PROPOESD ALIGNMENT

THE GRADES SHOWN TO THE NEAREST HUNDRETH ARE THE PROPOSED GRADES FOR THE NEW ALIGNEMENT

DATUM	
VERTICAL	NAVD 88(GEOID09) FT
HORIZONTAL	NAD 83(CORS) sFT
ADJUSTMENT	LSQ

T·Y·LIN INTERNATIONAL

PROJECT NAME: ROCKINGHAM
PROJECT NUMBER: BRF 0126(12)

FILE NAME: z10J072bdr_pro.dgn
PROJECT LEADER: R. HEBERT
DESIGNED BY: D. BURHANS
PROFILE SHEET

PLOT DATE: 7/28/2014
DRAWN BY: J. DAVIS
CHECKED BY: D. BRYANT
SHEET 13 OF 69

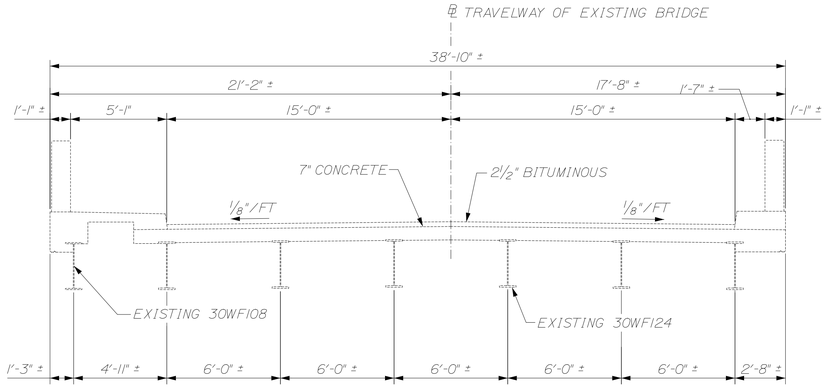

TYPICAL SECTION - EXISTING
1" = 4'-0"

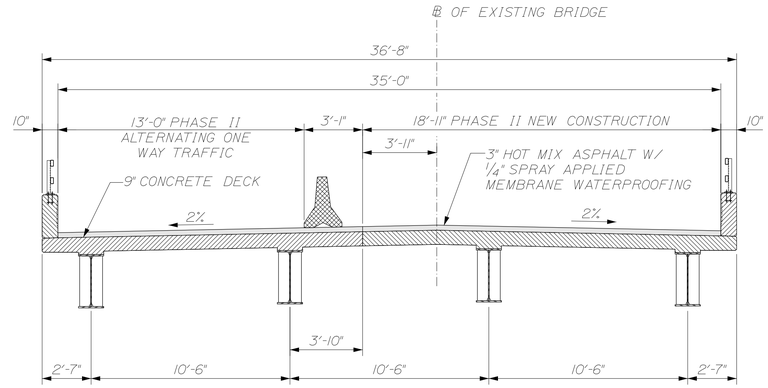

TYPICAL SECTION - CONSTRUCTION PHASE II
1" = 4'-0"

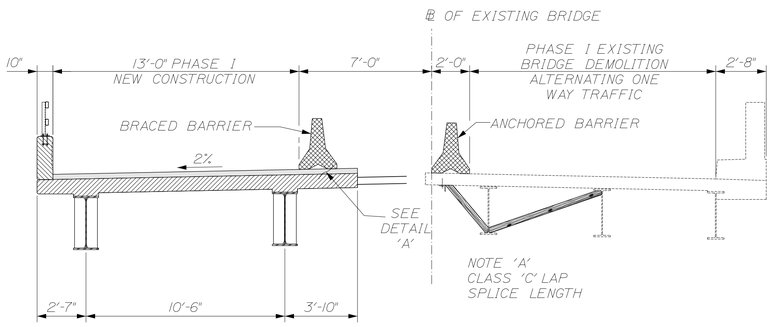

TYPICAL SECTION - CONSTRUCTION PHASE I
1" = 4'-0"

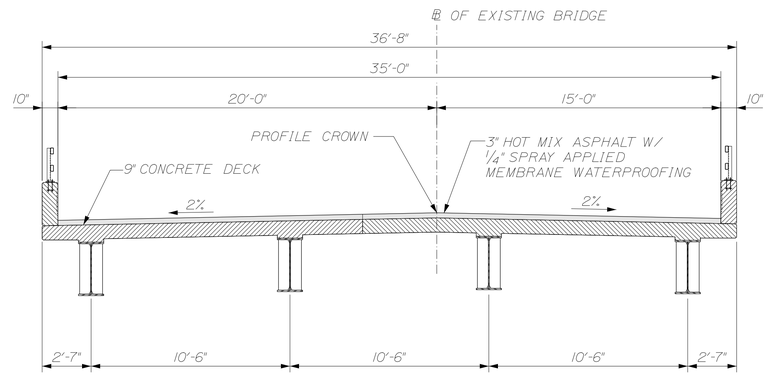

TYPICAL SECTION - FINAL BUILD
1" = 4'-0"

SUGGESTED BRIDGE CONSTRUCTION SEQUENCE NOTES:

PHASE 1 - NORTH HALF OF BRIDGE:

1. REMOVE EXISTING BRIDGE SUPERSTRUCTURE AND ABUTMENT BACKWALLS DOWN TO TOP OF EXISTING ABUTMENT BRIDGE SEATS.
2. INSTALL ABUTMENT PILES AND CONSTRUCT ABUTMENTS UP TO HORIZONTAL JOINT BELOW BEAMS.
3. CONSTRUCT ABUTMENT AND PIER PEDESTALS.
4. INSTALL BEARINGS AND NEW STEEL BEAMS.
5. INSTALL DIAPHRAGMS
6. PLACE CONCRETE DECK
7. CONSTRUCT APPROACH SLABS, BRIDGE RAILING, INSTALL SHEET MEMBRANE WATERPROOFING, AND PAVEMENT.

PHASE 2 - SOUTH HALF OF BRIDGE:

1. REMOVE EXISTING BRIDGE SUPERSTRUCTURE AND ABUTMENT BACKWALLS DOWN TO TOP OF EXISTING ABUTMENT BRIDGE SEATS.
2. INSTALL ABUTMENT PILES AND CONSTRUCT ABUTMENTS UP TO HORIZONTAL JOINT BELOW BEAMS.
3. CONSTRUCT ABUTMENT AND PIER PEDESTALS.
4. INSTALL BEARINGS AND NEW STEEL BEAMS.
5. INSTALL DIAPHRAGMS
6. PLACE CONCRETE DECK
7. CONSTRUCT APPROACH SLABS, BRIDGE RAILING, INSTALL SHEET MEMBRANE WATERPROOFING, AND PAVEMENT.

NOTES:

TEMPORARY TRAFFIC BARRIER SHALL MEET THE REQUIREMENTS FOR BRIDGE RAIL PERFORMANCE LEVEL TL3 OF NCHRP 350. TEMPORARY BARRIER CONNECTIONS SHALL BE DEVELOPED BY CONTRACTOR AND SHALL BE SUBMITTED TO VTRANS FOR REVIEW AND APPROVAL. TEMPORARY TRAFFIC BARRIER MAY BE ANCHORED TO EXISTING DECK BUT NOT TO PROPOSED DECK.

PAYMENT FOR TEMPORARY TRAFFIC BARRIER-BRACED SHALL BE MADE UNDER ITEM 621.90 TEMPORARY TRAFFIC BARRIER.

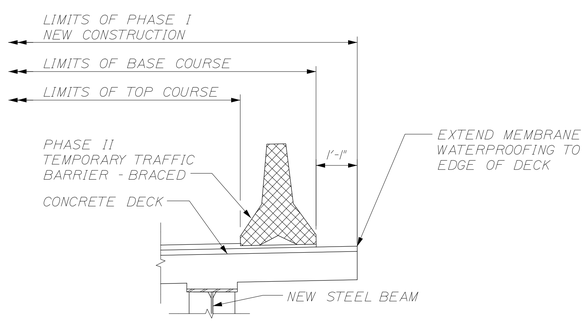

DETAIL 'A'
1/2" = 1'-0"

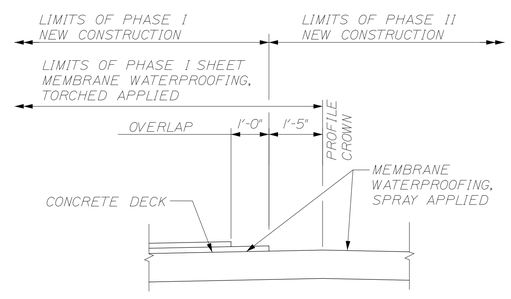

MEMBRANE OVERLAP DETAIL
1/2" = 1'-0"

CALDERWOOD ENGINEERING, ETC.
STRUCTURAL ENGINEERING • DETAILING SERVICES
222 RIVER RD, RICHMOND, ME 04357 PH/FX (207)737-2007/(207) 737-2008

PREPARED FOR:
COLD RIVER BRIDGES, LLC

CEE 106-BR-14

P.E. NUMBER

DATE:

	BY	DATE
	ETC	2014
DESIGN-DETAILED		
CHECKED-REVIEWED		
REVISIONS 1		
REVISIONS 2		
REVISIONS 3		
REVISIONS 4		
FIELD CHANGES		

VE SUPER. DESIGN
ROCKINGHAM VT. BRF 0126 (12)

CONSTRUCTION PHASING

SHEET NUMBER
14

CALDERWOOD ENGINEERING
222 RIVER ROAD
N. RICHMOND, ME 04357
PH. (207) 737-2007 FAX (207) 737-2008

Filename: ...\014_VE_z10j072bdr_bphase.dgn

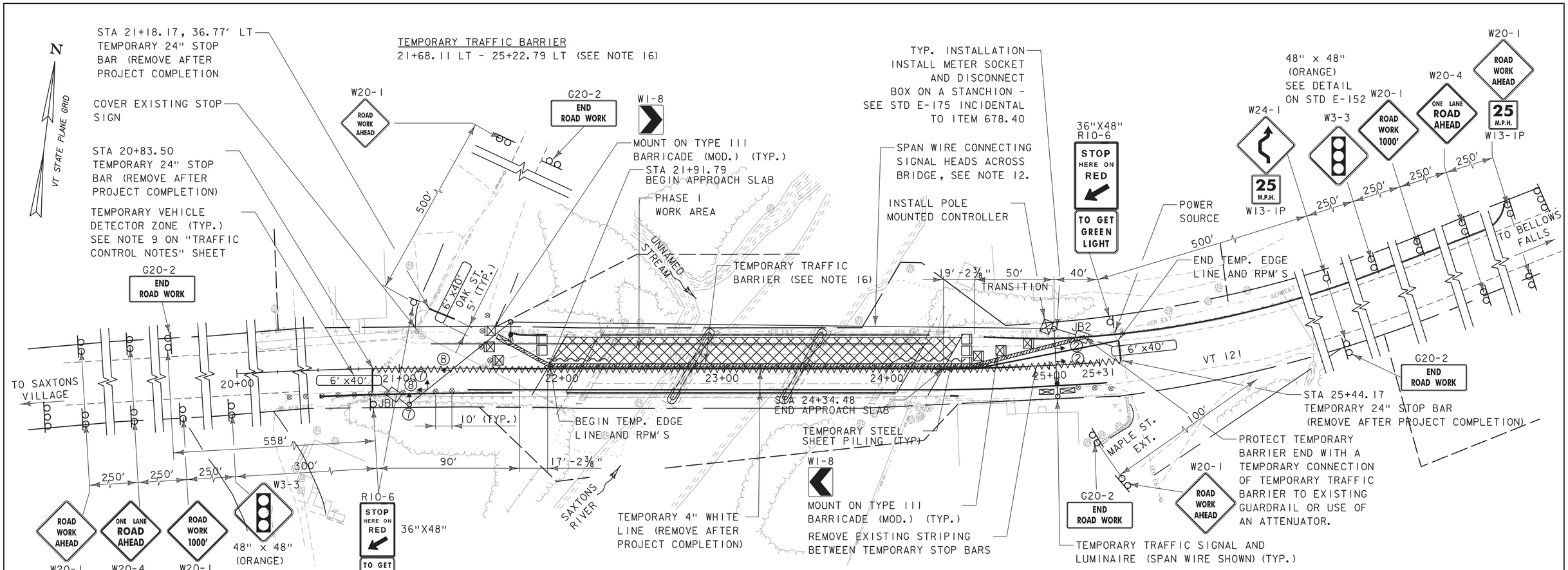

PHASE I

NOTES:

1. SEE SHEET ENTITLED "TRAFFIC CONTROL NOTES" FOR ADDITIONAL NOTES.
2. ALL SIGNAL RELATED SIGNS SHALL BE REMOVED OR COVERED WHEN THE SIGNAL IS NOT OPERATING.
3. ITEM LOCATIONS ARE APPROXIMATE.
4. THE CONTRACTOR SHALL BE RESPONSIBLE TO CONFIRM ALL MEASUREMENTS IN THE FIELD.
5. BRIDGE WORK SHALL BE CONSTRUCTED IN TWO PHASES:
   a. PHASE I: NORTH SIDE OF BRIDGE
   b. PHASE II: SOUTH SIDE OF BRIDGE
6. APPROACH CONSTRUCTION SIGNING SHALL REMAIN IN PLACE DURING THE ENTIRE CONSTRUCTION PERIOD.
7. REMOVE ALL TEMPORARY PAVEMENT MARKINGS AFTER COMPLETION OF PROJECT.
8. THE CONTRACTOR SHALL REPLACE ALL EXISTING PAVEMENT MARKINGS IN KIND AFTER COMPLETION OF PROJECT. SEE LAYOUT SHEET FOR DETAILS.
9. TEMPORARY TRAFFIC SIGNAL POLES MAY BE CANTILEVER OR STRAIN POLE AT THE CONTRACTOR'S OPTION. POSITION TEMPORARY SIGNAL POLES FOR MAXIMUM VISIBILITY.
10. INSTALLATION OF TEMPORARY CONSTRUCTION SIGNS SHALL NOT OBSTRUCT EXISTING SIGNS.
11. LOCATIONS OF CONSTRUCTION APPROACH SIGNS ARE NOT SHOWN TO SCALE. USE THE DIMENSIONING SHOWN UNLESS DIRECTED OTHERWISE BY THE ENGINEER.
12. AT CONTRACTOR'S OPTION, TEMPORARY SIGNAL WIRING ACROSS RIVER MAY BE LOCATED IN TEMPORARY CONDUIT ATTACHED TO BRIDGE.
13. PAYMENT FOR INSTALLATION OF TEMPORARY TRAFFIC SIGNAL SYSTEM, INCLUDING PAVEMENT MARKINGS AND PAVEMENT MARKING REMOVAL, AND ALL RELATED TRAFFIC CONTROL DEVICES AS SPECIFIED IN SECTION 678 WILL BE MADE UNDER THE APPROPRIATE SECTION 678 ITEMS IN THE CONTRACT. PAYMENT FOR FURNISHING AND MAINTAINING ALL REMAINING TRAFFIC CONTROL DEVICES, INCLUDING BUT NOT LIMITED TO CONSTRUCTION APPROACH SIGNING, WILL BE MADE UNDER CONTRACT ITEM 641.10
14. PAYMENT FOR TEMPORARY PAVEMENT MARKINGS AND RAISED PAVEMENT MARKERS ASSOCIATED WITH THE TEMPORARY SIGNAL SYSTEM WILL BE MADE UNDER CONTRACT ITEM 678.40.
15. A SHORT TERM FULL ROADWAY CLOSURE, WITHIN THE PROJECT LIMITS, WILL BE REQUIRED FOR COMPLETION OF THE KEYWAY CLOSURE POUR BETWEEN BEAMS B2 AND B3. CLOSURE SHALL NOT EXCEED 6 HOURS. THE CONTRACTOR SHALL PROVIDE A PLAN FOR THE SHORT TERM FULL ROAD CLOSURE TO THE ENGINEER FOR APPROVAL A MINIMUM OF 14 DAYS PRIOR TO THE CLOSURE. THE CONTRACTOR SHALL PROVIDE TWO (2) PORTABLE CHANGEABLE MESSAGE SIGNS. THEY SHALL BE PLACED ON VT RTE 121 IN ADVANCE OF THE PROJECT, ONE TO THE EAST AND ONE TO THE WEST. THE PORTABLE CHANGEABLE MESSAGE SIGNS SHALL BE PLACED 14 DAYS PRIOR TO THE CLOSURE TO GIVE ADVANCED NOTICE TO THE PUBLIC. THE ADVANCED NOTICE MESSAGE SHALL BE APPROVED BY THE ENGINEER. FOR CLOSURE PERIOD THE MESSAGE SHALL READ "BRIDGE CLOSED - SEEK ALTERNATE ROUTE". THESE SIGNS WILL BE PAID FOR UNDER ITEM 641.15. ALL OTHER ITEMS SPECIFIC TO THE FULL CLOSURE SHALL BE PAID FOR UNDER ITEM 641.10 TRAFFIC CONTROL.
16. TEMPORARY TRAFFIC BARRIER-BRACED SHALL BE USED EXCEPT FLARED ENDS MAY BE TEMPORARY TRAFFIC BARRIER IN ACCORDANCE WITH STANDARD SPECIFICATIONS SECTION 621.07. SEE " TEMPORARY TRAFFIC BARRIER-BRACED" SHEETS FOR DETAILS.

LEGEND

- TEMPORARY TRAFFIC BARRIER
- TYPE III BARRICADES
- TYPE III BARRICADES (MOD.)
- REFLECTORIZED PLASTIC DRUM
- PAVEMENT MARKING REMOVAL
- TRAFFIC SIGNAL POLE WITH LUMINAIRE
- SIGNAL HEAD AND STEP
- CONTROLLER
- JUNCTION BOX
- ATTENUATOR
- PORTABLE CHANGEABLE MESSAGE SIGN
- SIGN WITH ONE POST
- SIGN WITH TWO POSTS

SIGNING NOTES:

1. INSTALL SIGNS WITH THE FLOW OF TRAFFIC.
2. ADJUST SIGN SPACINGS TO ACCOMODATE EXISTING SIGNS OR OBSTRUCTIONS - TRIM BRANCHES AS NECESSARY. PAYMENT FOR TRIMING BRANCHES SHALL BE INCIDENTAL TO ITEM 641.10 TRAFFIC CONTROL
3. COVER CONTRADICTORY EXISTING SIGNING.
4. SEE LEGEND ON TRAFFIC CONTROL PLAN -2.

SCALE 1" = 30'-0"
30 0 30

PROJECT NAME:	ROCKINGHAM
PROJECT NUMBER:	BRF 0126(12)

T·Y·LIN INTERNATIONAL

FILE NAME: z10J072bdr_mot_01.dgn	PLOT DATE: 7/28/2014
PROJECT LEADER: R. HEBERT	DRAWN BY: C. SARGEANT
DESIGNED BY: C. SARGEANT	CHECKED BY: D. BURHANS
TRAFFIC CONTROL PLAN - 1	SHEET 15 OF 69

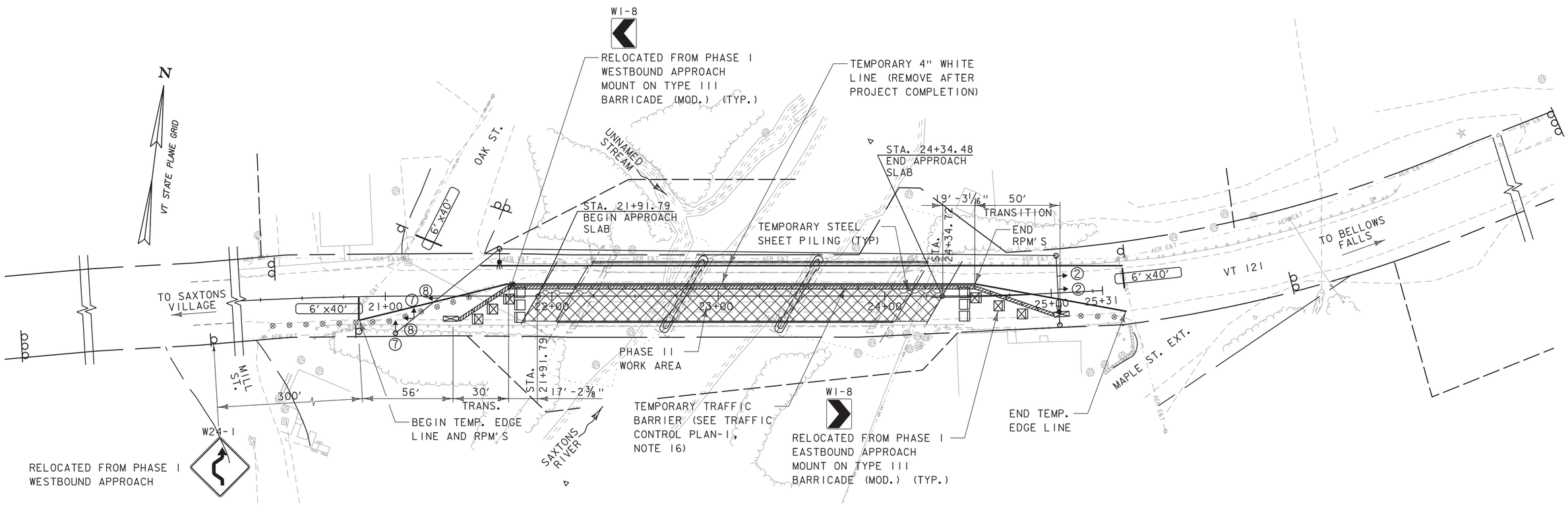

PHASE II

NOTES:

1. FOR ADDITIONAL NOTES SEE TRAFFIC CONTROL PLAN - 1.
2. SEE TRAFFIC CONTROL PLAN - 1 FOR CONSTRUCTION APPROACH SIGNING.

SIGN #	DESCRIPTION	SIZE	QTY	SUPPORT
W20-1	ROAD WORK AHEAD	48x48	4	8 - POSTS (2/SIGN ASSEMBLY)
W13-1P	25 M.P.H.	24x30	2	
W20-1	ROAD WORK 1000 FT	48x48	2	4 - POSTS (2/SIGN)
W20-4	ONE LANE ROAD AHEAD	48x48	4	8 - POSTS (2/SIGN)
W3-3	TRAFFIC SIGNAL	48x48	2	4 - POSTS (2/SIGN)
R10-6	STOP HERE ON RED	36x48	2	2 - POSTS (1/SIGN)
G20-2	END ROAD WORK	48x24	4	8 - POSTS (2/SIGN)
W1-8	CHEVRON	24X30	2	ON BARRICADE
W24-1	DOUBLE REVERSE CURVE (1LANE)	48x48	1	1- POSTS (1/SIGN ASSEMBLY)
W13-1P	25 M.P.H.	24x30	1	

SQUARE SIGN POSTS	35
POST ANCHORS	35

REMOVE AND RESET
TEMPORARY TRAFFIC BARRIER
21+40.71 RT - 24+88.45 RT

TEMPORARY TRAFFIC BARRIER
24+88.45 RT - 25+00.71 RT

SCALE 1" = 30'-0"
30 0 30

T·Y·LIN INTERNATIONAL

PROJECT NAME: ROCKINGHAM
PROJECT NUMBER: BRF 0126(12)

FILE NAME: z10J072bdr_mot_02.dgn
PROJECT LEADER: R. HEBERT
DESIGNED BY: C. SARGEANT
TRAFFIC CONTROL PLAN - 2

PLOT DATE: 7/28/2014
DRAWN BY: C. SARGEANT
CHECKED BY: D. BURHANS
SHEET 16 OF 69

COLORS: BLACK TEXT & BORDER
WHITE REFL. BACKGROUND
MATERIALS: PER STD. E-142

SEE TRAFFIC CONTROL PLAN FOR PHASED CONSTRUCTION PLANS.

CONTROLLER TIMING CHART

PHASE	1	2	3	4	5	6	7	8	9
IN USE	-	X	-	-	-	-	X	X	-
TRAFFIC MOVEMENT		WBT					SBLR	EBLT	
MIN GREEN		8					8	8	
MAX GREEN		23					20	24	
YELLOW CLEARANCE		5					5	5	
ALL RED CLEARANCE		6					6	6	
VEHICLE EXTENSION		3					3	3	
RECALL MODE		SOFT					NONE	SOFT	

SIGNAL FACE ARRANGEMENT
(12" LENSES)

ALL

NOTE:
RED BALL AND RED ARROW INDICATIONS REQUIRE LED LAMPS WITH A VISIBLE BEAM SPREAD OF 80 DEGREES OFF AXIS

MOVEMENT VOLUME ASSUMPTIONS

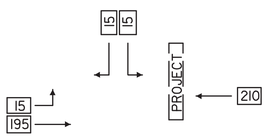

PHASING DIAGRAM

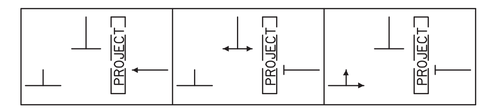

PHASE 2 PHASE 7 PHASE 8

NOTES:

1. DESIGN OF THE SIGNAL SUPPORT(S) AND ANY REQUIRED GUYING IS THE RESPONSIBILITY OF THE CONTRACTOR. ALL WORK SHALL BE COMPLETED WITHIN THE EXISTING ROW.

2. SIGNAL TIMING/TIMING ADJUSTMENTS REQUESTED BY THE ENGINEER SHALL BE ACCOMPLISHED AS DIRECTED BY THE ENGINEER AND PAYMENT SHALL BE INCIDENTAL TO THE TRAFFIC SIGNAL ITEM. THE ALL-RED CLEARANCE INTERVAL IS BASED ON AN ASSUMED SPEED OF 10-20 MPH, THE ENGINEER SHALL MAKE SEVERAL TRIAL RUNS TO DETERMINE THE PROPER ALL-RED CLEARANCE INTERVAL.

3. SIGNAL FACES SHALL CONSIST OF 12" LENSES. (RED, YELLOW, AND GREEN)

4. THE BOTTOM OF THE HOUSING OF A SIGNAL FACE SUSPENDED OVER A ROADWAY SHALL NOT BE LESS THAN 16½ FEET NOR MORE THAN 19 FEET ABOVE THE PAVEMENT GRADE AT THE CENTER OF THE ROADWAY. THE BOTTOM OF A SIGNAL FACE NOT MOUNTED OVER A ROADWAY, SHALL NOT BE LESS THAN 8 FEET NOR MORE THAN 15 FEET ABOVE THE GROUND. CAUTION SHOULD BE USED TO ENSURE COMPLIANCE WITH THE HEIGHT REQUIREMENTS IN THE EVENT THE NEW APPROACH GRADES DIFFER SIGNIFICANTLY FROM THE OLD ROAD GRADE.

5. SIGNAL FACES FOR ANY ONE APPROACH SHALL NOT BE LESS THAN 8 FEET APART MEASURED HORIZONTALLY BETWEEN CENTER OF FACES.

6. SIGNAL HEADS MAY BE HUNG ON A SPAN WIRE OR ON A CANTILEVER MAST ARM. AT LEAST ONE SIGNAL HEAD SHALL BE UNMISTAKABLY IN LINE WITH THE CENTER OF APPROACHING TRAFFIC AT ALL TIMES. THE SECOND SIGNAL HEAD MAY BE POST MOUNTED, LOCATED AT A DISTANCE NO GREATER THAN 14½ FEET FROM THE CENTER OF THE APPROACH LANE WHEN THE STOP BAR IS 40 FEET FROM THE SIGNAL HEAD. CONSULT THE M.U.T.C.D. FOR ADDITIONAL INFORMATION CONCERNING SIGNAL PLACEMENT.

7. SIGNAL HEAD PLACEMENT IS CRITICAL. HEADS SHALL BE ADJUSTED TO REFLECT LANE LOCATION CHANGES.

8. THE CONTRACTOR SHALL PROVIDE AN ACTUATED CONTROLLER. THE APPROACHES NOTED SHALL HAVE A TEMPORARY VEHICLE DETECTOR (VIA MICROWAVE EQUIPMENT). LOOPS ARE SHOWN FOR PLACEMENT PURPOSES ONLY. THE CONTROLLER, DETECTOR AND ALL OTHER SIGNAL EQUIPMENT SHALL MEET OR EXCEED ALL NEMA STANDARDS.

9. VEHICLE DETECTION SHALL BE VIA MICROWAVE DETECTION AND SHALL BE 6' X 40' FOR PRESENCE DETECTION AT THE STOP BAR WITH THE NEAR PORTION LOCATED 5 FEET BEYOND THE STOP BAR.

10. INTERVAL TIMING SHOWN IN SECONDS.

11. INTERCONNECT BETWEEN SIGNAL POLES BY WHATEVER MEANS POSSIBLE OR CONVENIENT TO PROVIDE FOR A SAFE INSTALLATION.

12. PLACE TEMPORARY POLES BEHIND GUARDRAIL WHERE POSSIBLE.

13. POLES SUPPORTING SPAN WIRES AND/OR MAST ARMS SHALL BE ADEQUATELY BRACED OR GUYED AND SHALL NOT BE PLACED SO AS TO CREATE A HAZARD TO THE TRAVELLING PUBLIC.

14. ALL TEMPORARY SIGNAL EQUIPMENT, SIGNS, ETC., SHALL BELONG TO THE CONTRACTOR AT THE END OF THE PROJECT AND THE CONTRACTOR SHALL BE RESPONSIBLE FOR ITS REMOVAL, INCLUDING ANY TEMPORARY PAVEMENT MARKINGS, UTILITY POLES, WIRES, ETC.

15. A 250 WATT MER/150 WATT HPS LUMINAIRE AND MAST ARM SHALL BE PROVIDED ON A POLE ON EACH APPROACH AT A MOUNTING HEIGHT OF 30' ABOVE ROADWAY CENTERLINE. THE INTENT IS TO LIGHT UP THE AREA AROUND THE SIGNAL HEADS AND STOP BAR FOR INCREASED VISIBILITY. THE ENGINEER SHALL DETERMINE THE ADEQUACY OF THE LIGHTING AND DIRECT CHANGES IF THE LIGHTING IS INSUFFICIENT.

16. STOP BARS SHALL BE LOCATED A MINIMUM OF 40' AND A MAXIMUM OF 120' FROM THE NEAREST SIGNAL HEAD.

17. PAYMENT FOR THE VEHICLE DETECTORS SHALL BE FOR EACH UNIT INSTALLED UNDER ITEM 678.42.

18. SEE STANDARDS E-171A, E171B, AND E-171C FOR ADDITIONAL INFORMATION ON SIGNALS AND DETECTORS.

19. A "SIGNAL AHEAD" SIGN SHALL BE PLACED AT LEAST 500' FROM THE SIGNAL OR AT A POSITION TO BE DETERMINED BY THE ENGINEER. THE COST OF THIS SIGN SHALL BE INCLUDED IN THE UNIT PRICE BID FOR ITEM 678.40.

20. ADDITIONAL PROJECT CONSTRUCTION SIGNS SHALL BE INSTALLED AS REQUIRED BY THE ENGINEER PER STANDARDS T-10, T-28, T-29 AND T-30. PAYMENT FOR THESE SIGNS, THE REFLECTORIZED PLASTIC DRUMS, ETC, SHALL BE INCLUDED IN THE UNIT PRICE BID FOR CONTRACT ITEM 641.10.

21. THE "TO GET GREEN LIGHT" SIGN IS TO BE USED ONLY ON APPROACHES WITH VEHICLE DETECTORS.

22. WHEN TEMPORARY BARRIER IS USED, BARRIER ENDS FACING ONCOMING TRAFFIC SHALL BE TAPERED BEYOND THE CLEAR ZONE, OR PROTECTED WITH AN APPROVED END TREATMENT DESIGNED FOR THE 85TH PERCENTILE SPEED OR THE POSTED SPEED LIMIT OF THE ROAD WAY.

23. THE CONTRACTOR SHALL NOTIFY ENGINEER PRIOR TO ACTIVATING THE TRAFFIC SIGNALS SUCH THAT THEY CAN FIELD REVIEW CONDITIONS. THE SIGNAL SYSTEM SHALL BE PAID FOR UNDER ITEM 678.40 AND SHALL CONSIST OF POLES, SIGNS AND POSTS, WARNING SIGNS, LUMINAIRES (IF USED) AND SIGNAL EQUIPMENT TO PROVIDE FOR AN ADEQUATE DESIGN. ALSO INCLUDED ARE PERMITS AND COSTS ASSOCIATED WITH PROVIDING ELECTRICAL POWER.

24. PAYMENT FOR ALL TEMPORARY TRAFFIC CONTROL DEVICES NOT ASSOCIATED DIRECTLY WITH THE TEMPORARY TRAFFIC SIGNAL SYSTEM, INCLUDING BUT NOT LIMITED TO CONSTRUCTION APPROACH SIGNING, SHALL BE MADE UNDER ITEM 641.10.

25. SIGNS, POSTS, TEMPORARY PAVEMENT MARKINGS REMOVAL, RAISED PAVEMENT MARKINGS AND PAVEMENT MARKING REMOVAL RELATED TO THE TEMPORARY TRAFFIC SIGNAL SYSTEM INSTALLATION AS SHOWN ON THE TRAFFIC CONTROL PLAN ("STOP HERE ON RED", "SIGNAL AHEAD", "TO GET GREEN LIGHT", ETC.) ARE INCLUDED IN THE UNIT PRICE BID FOR CONTRACT ITEM 678.40.

26. PAYMENT FOR TEMPORARY TRAFFIC BARRIER, REMOVING AND RESETTING TEMPORARY TRAFFIC BARRIER, AND ASSOCIATED ENERGY ABSORPTION ATTENUATORS USED, SHALL BE MADE UNDER THE APPROPRIATE ITEMS. PAYMENT FOR THE REMOVING AND RESETTING OF THE ENERGY ABSORPTION ATTENUATORS SHALL BE INCIDENTAL TO THE ENERGY ABSORPTION ATTENUATOR ITEM.

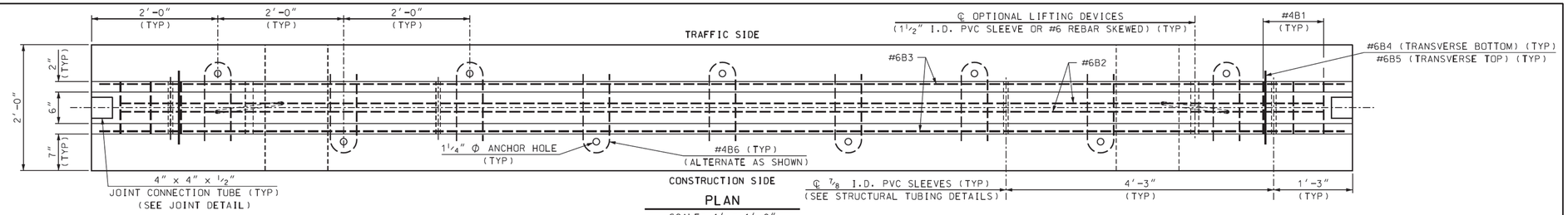

PLAN

SCALE: 1' = 1'-0"

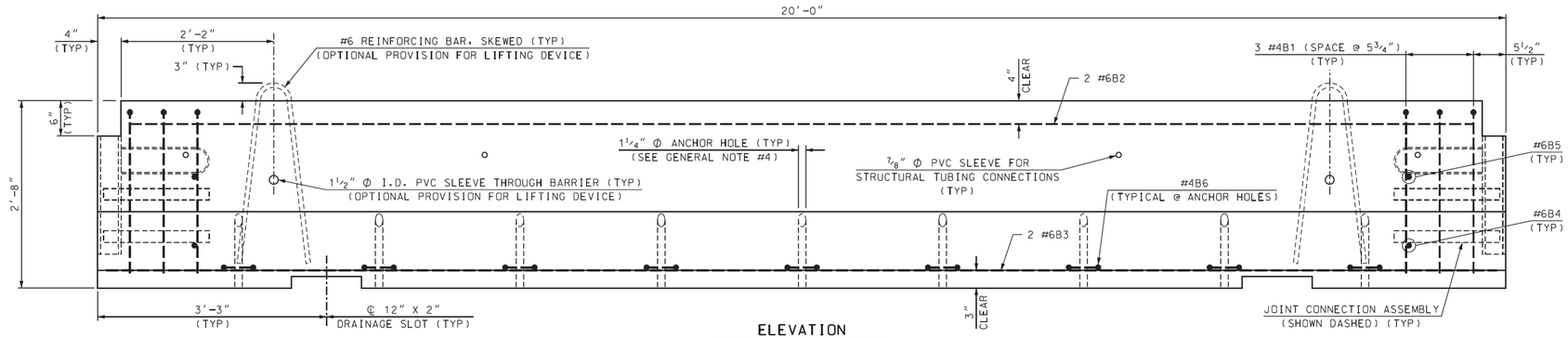

ELEVATION

SCALE: 1' = 1'-0"

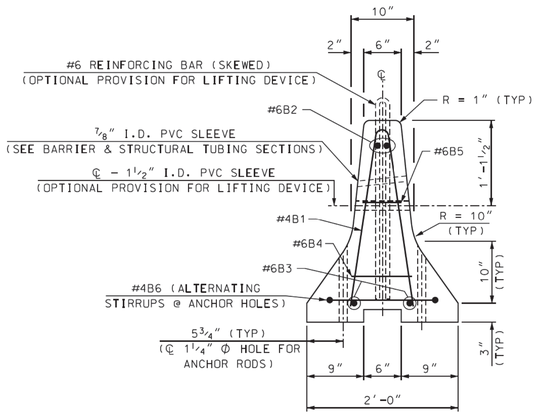

TYPICAL SECTION

SCALE: 1" = 1'-0"

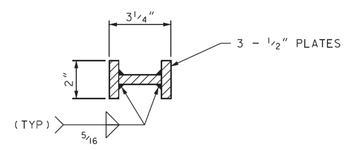

SECTION D-D

SCALE: 3" = 1'-0"

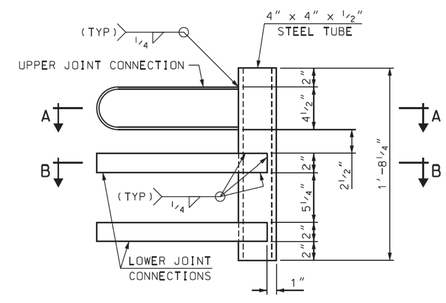

JOINT ASSEMBLY

SCALE: 1½" = 1'-0"

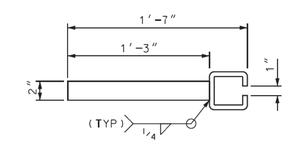

SECTION A-A
(UPPER CONNECTION)

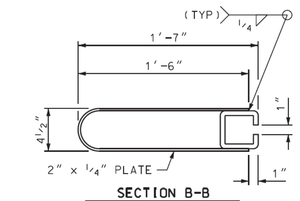

SECTION B-B
(LOWER CONNECTION)

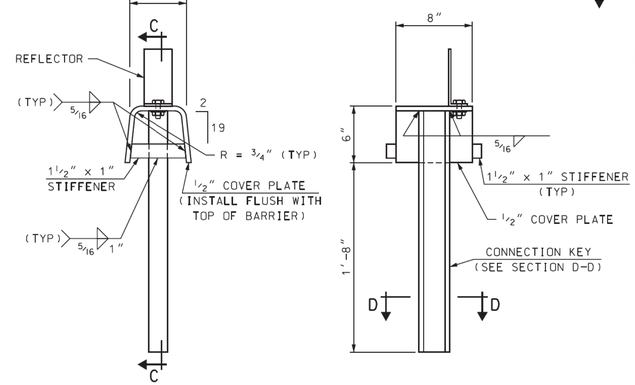

END VIEW

SECTION C-C

CONNECTION KEY ASSEMBLY DETAILS

SCALE: 1½" = 1'-0"

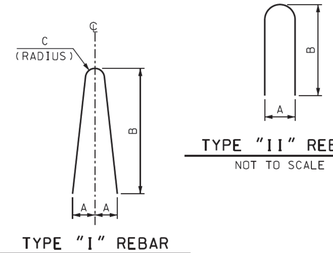

TYPE "I" REBAR

NOT TO SCALE

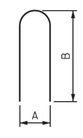

TYPE "II" REBAR

NOT TO SCALE

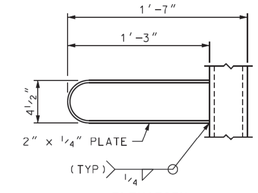

ELEVATION
(UPPER CONNECTION)

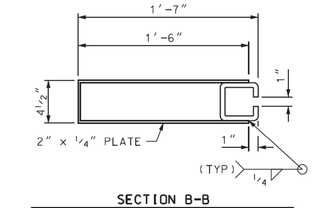

SECTION B-B
(LOWER CONNECTIONS - ALTERNATE)

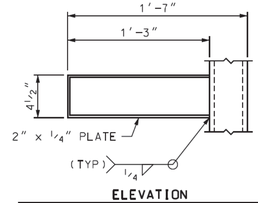

ELEVATION
(UPPER CONNECTION - ALTERNATE)

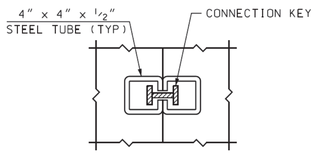

KEYED JOINT DETAIL

NOT TO SCALE

JOINT CONNECTION DETAILS

SCALE: 1½" = 1'-0" (EXCEPT AS NOTED)

GENERAL NOTES

1. TEMPORARY TRAFFIC BARRIER-BRACED SHALL BE FURNISHED BY THE CONTRACTOR AND PAID FOR AS ITEM 621.90 TEMPORARY TRAFFIC BARRIER. CONCRETE BARRIER AND ALL ATTACHMENTS SHALL BE FABRICATED IN ACCORDANCE WITH SECTION 621. ALL BARRIER UNITS FOR BRACED SYSTEMS SHALL BE 20' LONG.
2. TEMPORARY TRAFFIC BARRIER-BRACED DETAILS, AS SHOWN IN THESE PLANS, ARE IN COMPLIANCE WITH REQUIREMENTS PER UPDATED NCHRP REPORT 350 FOR TEST NO. 3-11, TL-3 CRASH TESTED BY MIDWEST ROADSIDE SAFETY; NY BOX BEAM STIFFENING OF UNANCHORED TCB, MARCH 2008. THE BARRIER SYSTEM TESTED WITH A 27.6" DYNAMIC DEFLECTION AND ALLOWS FOR PLACEMENT AT A MINIMUM 12" DISTANCE BETWEEN BARRIERS AND EDGE OF BRIDGE DECK.
3. A MINIMUM OF TWO BARRIER UNITS WITH BRACED JOINTS ARE REQUIRED TO BE PLACED BEYOND BOTH ENDS OF THE BRIDGE WORK AREA FOR SPEED GREATER THAN 45 MPH. FOR SPEEDS ≤ 45 MPH, A MINIMUM OF ONE BRACED BARRIER IS REQUIRED TO BE FULLY SET BEYOND EACH END OF BRIDGE WORK AREA.
4. THE LAST CONCRETE BARRIER UNIT, AT EACH END OF BARRIER LAYOUT, SHALL BE ANCHORED A MINIMUM 18" BELOW THE ROADWAY SURFACE. REQUIRED 1" DIA. ANCHOR RODS (A36 STEEL) SHALL BE INSTALLED WITH 5 ANCHORS ON THE TRAFFIC SIDE OF BARRIER AND 4 ON THE CONSTRUCTION SIDE. IF THE END(S) OF THE BRACED CONCRETE BARRIER SYSTEM EXTENDS 50' OR MORE BEYOND LIMITS OF BRIDGE WORK THE LAST BARRIER UNIT DOES NOT REQUIRE ANCHORAGE.
5. TEMPORARY TRAFFIC BARRIER - BRACED, MAY BE INSTALLED WITH A 230' MINIMUM RADIUS. GAPS CREATED BETWEEN STRUCTURAL TUBES AND CONCRETE BARRIER, DURING A RADIAL LAYOUT, SHALL BE SHIMMED WITH 8"x8"x½" PLATES & FENDER WASHERS TO FIRMLY ATTACH STRUCTURAL TUBING TO BARRIER.
6. THE CONTRACTOR SHALL FURNISH AND INSTALL APPROVED RETROREFLECTIVE DELINEATORS AT 25-FOOT INTERVALS ALONG TOP AND/OR ONE FOOT DOWN THE SIDE OF PORTABLE CONCRETE BARRIER. PAYMENT FOR DELINEATORS SHALL BE MADE UNDER ITEM 621.90 TEMPORARY TRAFFIC BARRIER. THE COLOR OF DELINEATORS SHALL, IN ALL INSTANCES, CONFORM TO THE COLOR OF EDGE LINE MARKINGS. DELINEATORS SUPPLEMENT, BUT DO NOT REPLACE, THE NEED FOR RETROREFLECTIVE SOLID EDGE LINE MARKINGS.

MATERIAL NOTES

1. BARRIERS SHALL BE LIGHT COLORED CLASS AA CONCRETE, WITH MINIMUM COMPRESSIVE STRENGTH OF 4000 psi, AND SHALL HAVE A SMOOTH UNIFORM SURFACE FREE OF DEFECTS AND IRREGULARTIES. CASTING DATE SHALL BE SHOWN ON BARRIER. ALL EXPOSED EDGES OF CONCRETE SHALL BE CHAMFERED ¾", UNLESS OTHERWISE NOTED.
2. ALL REINFORCING STEEL SHALL BE AASHTO M31 (ASTM A615) GRADE 60. ALL REINFORCEMENT SHALL HAVE 1½" MINIMUM CLEAR COVER, UNLESS OTHERWISE NOTED.
3. STRUCTURAL STEEL, EXCEPT THE STEEL TUBES, SHALL BE ASTM A36 GRADE 345. ALL STEEL SHALL BE FABRICATED IN ACCORDANCE WITH SECTION 506.
4. STEEL TUBES, 6x6x⅜ & 4x4x½, SHALL BE ASTM A 500 GRADE B OR C. THE 6x6x⅜ TUBES SHALL BE 12' LONG AND GALVANIZED IN ACCORDANCE WITH SUBSECTION 560.15.
5. A MINIMUM OF 2 RECESSED LIFTING DEVICES, EACH WITH THE CAPACITY TO LIFT A MASS OF 6 TONS (MINIMUM), SHALL BE INSTALLED TO EACH BARRIER UNIT. TWENTY FOOT LONG CONCRETE BARRIER UNITS ARE APPROXIMATELY 400 LBS./FT.
6. DELINEATORS SHALL BE ATTACHED TO BARRIER USING AN APPROVED ADHESIVE MATERIAL OR AS SHOWN ON THIS SHEET.

REINFORCING SCHEDULE (PER 20' BARRIER UNIT)

MARK	SIZE	LENGTH	# PIECES	TYPE	A	B	C	LOCATION
B1	#4	4'-10"	6	I	5"	2'-4"	1"	STIRRUPS
B2	#6	19'-1"	2	—				LONGITUDINAL (TOP)
B3	#6	19'-9"	2	—				LONGITUDINAL (BOTTOM)
B4	#6	1'-2"	2	—				TRANSVERSE (BOTTOM)
B5	#6	6"	2	—				TRANSVERSE (TOP)
B6	#4	2'-9"	9	II	5"	1'-3"		STIRRUPS

PROJECT NAME: ROCKINGHAM
PROJECT NUMBER: BRF 0126(12)

T·Y·LIN INTERNATIONAL

FILE NAME: x10J072bdr_ttb.dgn
PROJECT LEADER: R. HEBERT
DESIGNED BY: -
TEMPORARY TRAFFIC BARRIER-BRACED (1 OF 2)

PLOT DATE: 7/28/2014
DRAWN BY: P. MCCLURE
CHECKED BY: D. BURHANS
SHEET 18 OF 69

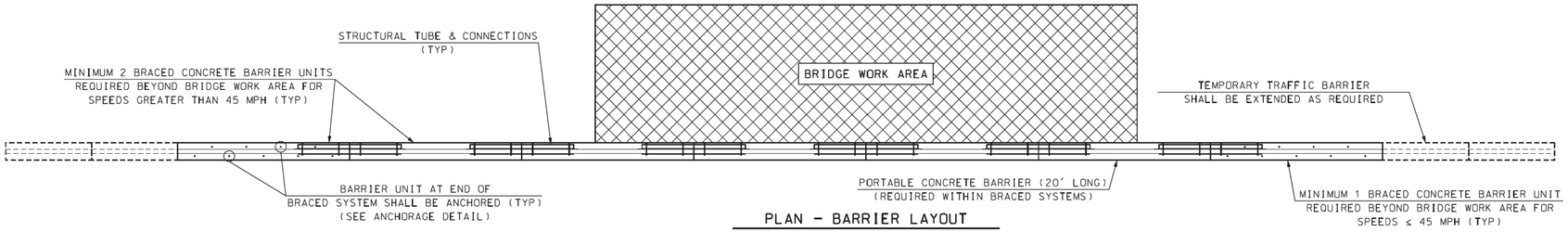

PLAN - BARRIER LAYOUT

NOT TO SCALE

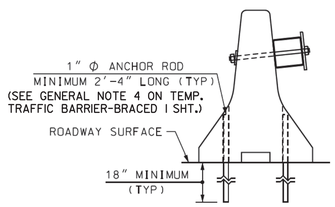

ANCHORAGE DETAIL

SCALE: 3/4" = 1'-0"

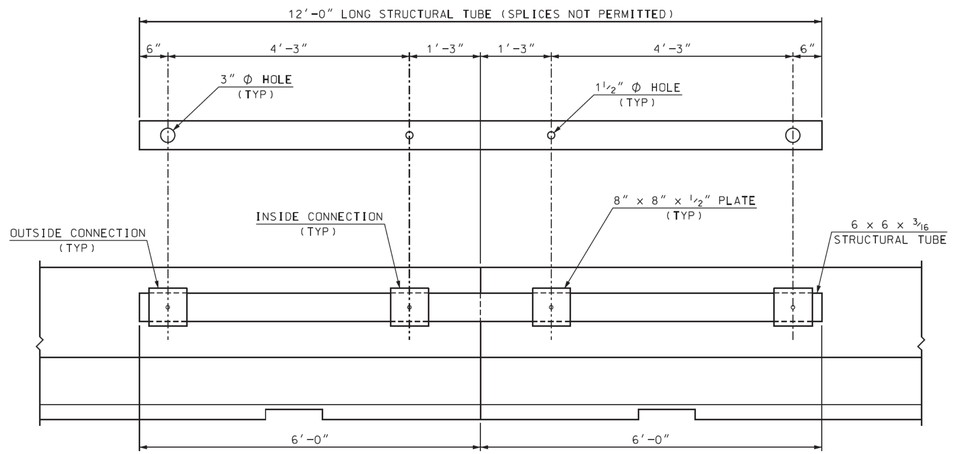

STRUCTURAL TUBING DETAILS

SCALE: 3/4" = 1'-0"

PVC SLEEVE OPENINGS SHALL BE MODIFIED/DRILLED AS REQUIRED TO PROPERLY ALIGN STRUCTURAL TUBE BRACING UNITS FOR CURVED ALIGNMENTS

THE PRESENCE OF NORMAL HOLES WHICH HAVE BEEN MODIFIED/DRILLED WILL NOT AFFECT THE REUSE OF CONCRETE BARRIER UNITS

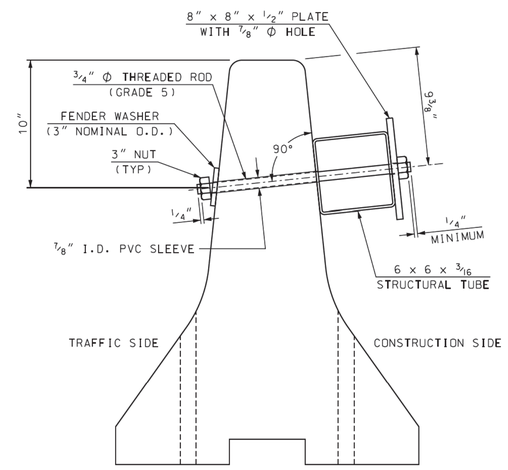

SECTION WITHOUT SHIMS

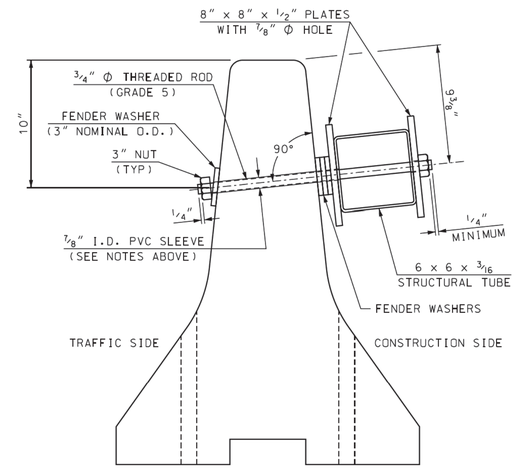

SECTION WITH SHIMS

BARRIER & STRUCTURAL TUBING SECTIONS

SCALE: 2" = 1'-0"

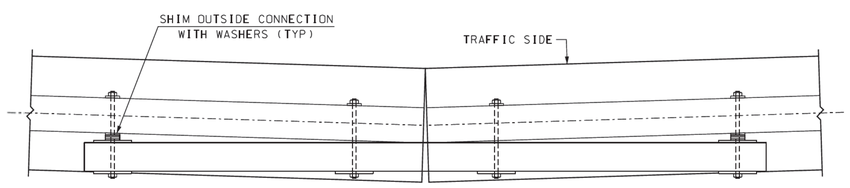

WORK AREA OUTSIDE CURVE

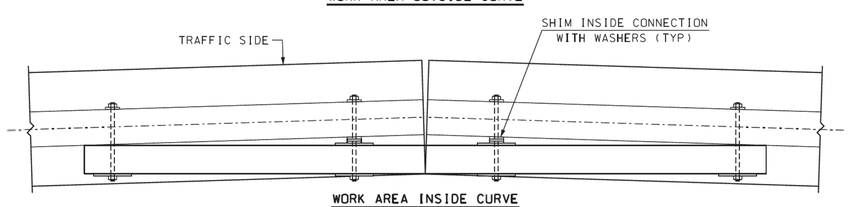

WORK AREA INSIDE CURVE

TUBE CONNECTIONS (CURVED ALIGNMENT)

SCALE: 3/4" = 1'-0"

PROJECT NAME: ROCKINGHAM	
PROJECT NUMBER: BRF 0126(12)	
FILE NAME: x10J072bdr_ttb.dgn	PLOT DATE: 7/28/2014
PROJECT LEADER: R. HEBERT	DRAWN BY: P. MCLURE
DESIGNED BY: -	CHECKED BY: D. BURHANS
TEMPORARY TRAFFIC BARRIER-BRACED (2 OF 2)	SHEET 19 OF 69

T·Y·LIN INTERNATIONAL

STATE OF VERMONT
AGENCY OF TRANSPORTATION

TRAFFIC SIGN SUMMARY SHEET

MILE MARKER, STATION OR SIGN NUMBER	SIGN LEGEND	SIGN DIMENSIONS EACH	SIGN DIMENSIONS WIDTH (in)	SIGN DIMENSIONS HEIGHT (in)	NEW & SALVAGED SIGNS "A"	NEW & SALVAGED SIGNS "B"	NEW & SALVAGED SIGNS SALV SIGN	NEW & SALVAGED SIGNS SALV TIS	EXIST POST RETAIN	EXIST POST SALVAGE	NEW SIGN POSTS NO. OF POST	FLANGED CHANNEL (LB / FT) 1.12	FLANGED CHANNEL (LB / FT) 2.00	FLANGED CHANNEL (LB / FT) 3.00	SQUARE STEEL (in) (LB / FT) 1.75 1.88	SQUARE STEEL (in) (LB / FT) 2.00 2.42	SQUARE STEEL (in) (LB / FT) 2.50 3.35	ANCHOR	SLEEVE	TUBULAR ALUMINUM Ø (IN) (LB / FT) 3.00 1.30	TUBULAR ALUMINUM Ø (IN) (LB / FT) 4.00 1.70	TUBULAR ALUMINUM Ø (IN) (LB / FT) 4.0 MOD 1.70	FOUNDATION	TUBULAR STEEL Ø (IN) (LB / FT) 3.00 7.60	TUBULAR STEEL Ø (IN) (LB / FT) 3.50 9.00	TUBULAR STEEL Ø (IN) (LB / FT) 4.00 10.80	TUBULAR STEEL Ø (IN) (LB / FT) 5.00 14.60	W-SHAPE STEEL FTG. SIZE 24"	W-SHAPE STEEL FTG. SIZE 30"	W-SHAPE STEEL WEIGHT	W-SHAPE STEEL POST SIZE	W-SHAPE STEEL SIGN FRAME REQUIRED	REMARKS	SIGN DETAIL DETAIL ON SHEET NUMBER	SIGN DETAIL STANDARD SHEET NUMBER
OPTION ITEMS																																		
20+26.09, RT			28.0	12.0	2.3		1.0				1.0					X		1.0															MOUNT TO STOP SIGN WITH BRACKET	20	
21+11.51, LT			30.0	30.0	6.3						1.0					X		1.0																	
22+04.98, LT							1.0				1.0					X		1.0																E-143
21+97.75, RT			6.0	8.0	0.3						1.0					X		1.0															BRIDGE NO. PLAQUE VD-701		T-42
24+30.02, LT			6.0	8.0	0.3						1.0					X		1.0															BRIDGE NO. PLAQUE VD-701		T-42
												FT	FT	FT	FT	FT	FT	EA	EA	LB	LB	LB		LB	LB	LB	LB							
FINAL POST LENGTHS ARE TO BE DETERMINED IN THE FIELD. POST SIZES ARE COMPUTED BASED ON INFORMATION FURNISHED ON THE STANDARD SHEETS AND THE VTRANS "SIGN POST DESIGN GUIDELINE."												.	.	.	.	60.	.	5.	.	.	.	.		.	.	.	.							
		TOTALS			SF 9.2	SF .	EA. 2.	SF .				FT .			FT 60.					LB .			EA.	LB .				EA. .	EA. .	LB .				

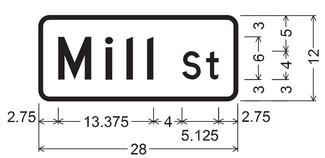

DOUBLE-SIDED STREET SIGN:;
1.500" Radius, 0.500" Border, White on Green;
[Mill] D; [St] D;

D3-1 STREET NAME SIGN DETAIL

PROJECT NAME: ROCKINGHAM	
PROJECT NUMBER: BRF 0126(12)	
T·Y·LIN INTERNATIONAL	FILE NAME: z10J072bdr_TSS.dgn PROJECT LEADER: R. HEBERT DESIGNED BY: B. TOOTHAKER SIGN SUMMARY SHEET
	PLOT DATE: 7/28/2014 DRAWN BY: B.TOOTHAKER CHECKED BY: D. BURHANS SHEET 20 OF 69

SOIL CLASSIFICATION

AASHTO	
A1	Gravel and Sand
A3	Fine Sand
A2	Silty or Clayey Gravel and Sand
A4	Silty Soil - Low Compressibility
A5	Silty Soil - Highly Compressible
A6	Clayey Soil - Low Compressibility
A7	Clayey Soil - Highly Compressible

ROCK QUALITY DESIGNATION

R.Q.D. (%)	ROCK DESCRIPTION
<25	Very Poor
25 to 50	Poor
51 to 75	Fair
76 to 90	Good
>90	Excellent

SHEAR STRENGTH

UNDRAINED SHEAR STRENGTH IN P.S.F.	CONSISTENCY
<250	Very Soft
250-500	Soft
500-1000	Med. Stiff
1000-2000	Stiff
2000-4000	Very Stiff
>4000	Hard

CORRELATION GUIDE OF "N" TO DENSITY/CONSISTENCY

DENSITY (GRANULAR SOILS)		CONSISTENCY (COHESIVE SOILS)	
N	DESCRIPTIVE TERM	N	DESCRIPTIVE TERM
<5	Very Loose	<2	Very Soft
5-10	Loose	2-4	Soft
11-24	Med. Dense	5-8	Med. Stiff
25-50	Dense	9-15	Stiff
>50	Very Dense	16-30	Very Stiff
		31-60	Hard
		>60	Very Hard

COMMONLY USED SYMBOLS

▼	Water Elevation
⊗	Standard Penetration Boring
⊕	Auger Boring
⊙	Rod Sounding
S	Sample
N	Standard Penetration Test Blow Count Per Foot For: 2" O. D. Sampler 1 3/8" I. D. Sampler Hammer Weight Of 140 Lbs. Hammer Fall Of 30"
VS	Field Vane Shear Test
US	Undisturbed Soil Sample
B	Blast
DC	Diamond Core
MD	Mud Drill
WA	Wash Ahead
HSA	Hollow Stem Auger
AX	Core Size 1 1/8"
BX	Core Size 1 5/8"
NX	Core Size 2 1/8"
M	Double Tube Core Barrel Used
LL	Liquid Limit
PL	Plastic Limit
PI	Plasticity Index
NP	Non Plastic
w	Moisture Content (Dry Wgt. Basis)
D	Dry
M	Moist
MTW	Moist To Wet
W	Wet
Sat	Saturated
Bo	Boulder
Gr	Gravel
Sa	Sand
Si	Silt
Cl	Clay
HP	Hardpan
Le	Ledge
NLTD	No Ledge To Depth
CNPF	Can Not Penetrate Further
TLOB	To Ledge Or Boulder
NR	No Recovery
Rec.	Recovery
%Rec.	Percent Recovery
RQD	Rock Quality Designation
CBR	California Bearing Ratio
<	Less Than
>	Greater Than
R	Refusal (N > 100)

COLOR

blk	Black	pnk	Pink
bl	Blue	pu	Purple
brn	Brown	rd	Red
dk	Dark	tn	Tan
gry	Gray	wh	White
gn	Green	yel	Yellow
lt	Light	mltc	Multicolored
or	Orange		

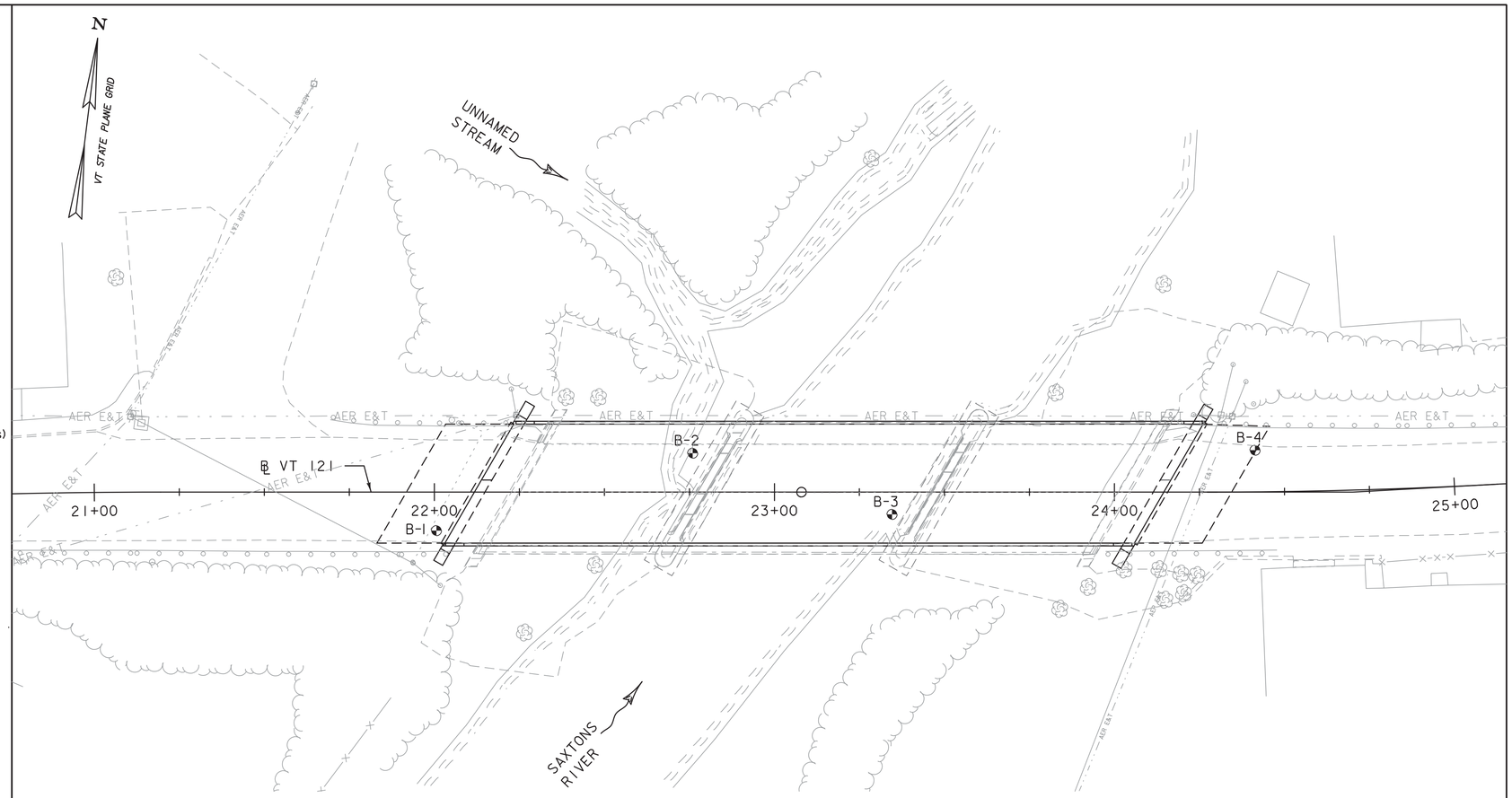

BORING LAYOUT

SCALE 1" = 20'-0"

0 20 40

SCALE IN FEET

GENERAL NOTES

1. The subsurface explorations shown herein were made between November 11, 2011 and November 12, 2011 and between December 15, 2011 and December 16, 2011 by S.W. Cole Engineering, Inc.
2. Soil and rock classifications, properties and descriptions are based on engineering interpretation from available subsurface information by S.W. Cole Engineering and may not necessarily reflect actual variations in sub-surface conditions that may be encountered between individual boring or sample locations.
3. Observed water levels and/or conditions indicated are as recorded at the time of exploration and may vary according to the prevailing rainfall, methods of exploration and other factors.
4. Engineering judgement was exercised in preparing the subsurface information presented herein. Analysis and interpretation of subsurface data was performed and interpreted for Agency design and estimating purposes. Presentation of the information in the Contract is intended to provide the Contractor access to the same data available to the Agency. The subsurface information is presented in good faith and is not intended as a substitute for personal investigation, independent interpretation, independent analysis or judgement by the Contractor.
5. Pictorial structure details shown on the boring plan layout or soils profile are for illustrative purposes only and may not accurately portray final contract details.
6. Terminology used on boring logs to describe the hardness, degree of weathering, and spacing of fractures, joints and other discontinuities in the bedrock is defined in the AASHTO Manual on Subsurface Investigations, 1988.

BORING LAYOUT

HOLE NO.	STATION	OFFSET	NORTHING	EASTING	GROUND ELEVATION	ELEVATION TLOB
B-1	22+00.6	11.3 RT	233043.05	1639670.68	452.0	356.0
B-2	22+76.0	11.4 LT	233074.93	1639742.67	451.0	-
B-3	23+34.6	6.6 RT	233064.31	1639803.06	450.0	-
B-4	24+41.5	12.3 LT	233096.24	1639906.66	449.0	-

DEFINITIONS (AASHTO)

BEDROCK (LEDGE) - Rock in its native location of indefinite thickness.

BOULDER - A rock fragment with an average dimension > 12 inches.

COBBLE - Rock fragments with an average dimension between 3 and 12 inches.

GRAVEL - Rounded particles of rock < 3" and > 0.0787" (#10 sieve).

SAND - Particles of rock < 0.0787" (#10 sieve) and > 0.0029" (#200 sieve).

SILT - Soil < 0.0029" (#200 sieve), non or slightly plastic and exhibits no strength when air-dried.

CLAY - Fine grained soil, exhibits plasticity when moist and considerable strength when air-dried.

VARVED - Alternate layers of silt and clay.

HARDPAN - Extremely dense soil, cemented layer, not softened when wet.

MUCK - Soft organic soil (containing > 10% organic material.

MOISTURE CONTENT - Weight of water divided by dry weight of soil.

FLOWING SAND - Granular soil so saturated (loose) that it flows into drill casing during extraction of wash rod.

STRIKE - Angle from magnetic north to line of intersection of bed with a horizontal plane.

DIP - Inclination of bed with a horizontal plane.

PROJECT NAME: ROCKINGHAM
PROJECT NUMBER: BRF 0126(12)

T·Y·LIN INTERNATIONAL

FILE NAME: z10J072bdr_bor_inf.dgn
PROJECT LEADER: R. HEBERT
DESIGNED BY: T. POULIN
BORING INFORMATION & LAYOUT SHEET

PLOT DATE: 7/28/2014
DRAWN BY: S. MORGAN
CHECKED BY: R. HEBERT
SHEET 21 OF 69

STATE OF VERMONT
AGENCY OF TRANSPORTATION
MATERIALS & RESEARCH SECTION
SUBSURFACE INFORMATION

BORING LOG

BRF 0126(12) Bridge Replacement Proj.
Route 121 over the Saxton River
Rockingham, Vermont

Boring No.: **B- 1**
Page No.: 1 of 3
Pin No.:
Checked By:

Boring Crew: Nate Seguin (SWCE), Tony Martinelli (CDS)
Date Started: 11/11/11 Date Finished: 11/15/11
VTSPG NAD83: N 233043.05 ft E 1639670.68 ft
Station: Offset:
Ground Elevation: 452.0 ft

	Casing	Sampler
Type:	PW	SS
I.D.:	5 in	1.25 in
Hammer Wt:	N.A.	140 lb.
Hammer Fall:	N.A.	30 in.
Hammer/Rod Type:	Auto/AWJ	
Rig:	Truck Mount D-120	C_E =

Groundwater Observations

Date	Depth (ft)	Notes

Depth (ft)	Strata (1)	CLASSIFICATION OF MATERIALS (Description)	Run (Dip deg.)	Blows/6" (N Value)	Moisture Content %	Gravel %	Sand %	Fines %
		BITUMINOUS PAVEMENT, 0.0 ft - 0.3 ft		12-10-10-9 (20)				
		Dark brown silty gravelly SAND, Rec. = 0.5 ft, 0.3 ft - 0.6 ft						
		Brown SAND with some gavel and silt, 0.6 ft - 3.0 ft						
		Brown Silty SAND with some gravel, 3.0 ft - 8.0 ft						
5		Rec. = 1.0 ft		5-5-5-5 (10)				
		Brown silty gravelly SAND, 8.0 ft - 21.0 ft						
10		Rec. = 0.25 ft		4-3-4-3 (7)				
15		Rec. = 0.8 ft		8-9-10-7 (19)				
20		Rec. = 0.7 ft		9-7-7-11 (14)				
		Brown gravelly silty SAND, 21.0 ft - 28.0 ft, (NATIVE)						
25		Rec. = 1.2 ft		20-13-19-27 (32)				
		Gray silty gravelly SAND, 28.0 ft - 33.0 ft, (TILL)						
30		Rec. = 1.5 ft		30-48-31-34 (79)				
		Gray silty SAND with some gravel, 33.0 ft - 68.0 ft, (TILL)						
35		Rec. = 1.3 ft		24-35-53-79 (88)				
40		Rec. = 1.5 ft		32-34-41-46 (75)				
45		Rec. = 1.5 ft		44-48-76-50-4" (124)				
		Rec. = 1.5 ft		41-36-				

BOTTOM OF
ABUT. NO. I
ELEV. = 443.00

Notes:
1. Stratification lines represent approximate boundary between material types. Transition may be gradual.
2. N Values have not been corrected for hammer energy. C_E is the hammer energy correction factor.
3. Water level readings have been made at times and under conditions stated. Fluctuations of groundwater may occur due to other factors than those present at the time measurements were made.

2010 COPY 11-1030.GPJ \ VERMONT AOT.GDT 12/21/12

ESTIMATED PILE TIP
@ ABUT. NO. I
ELEV. = 367.00

STATE OF VERMONT
AGENCY OF TRANSPORTATION
MATERIALS & RESEARCH SECTION
SUBSURFACE INFORMATION

BORING LOG

BRF 0126(12) Bridge Replacement Proj.
Route 121 over the Saxton River
Rockingham, Vermont

Boring No.: **B- 1**
Page No.: 2 of 3
Pin No.:
Checked By:

Boring Crew: Nate Seguin (SWCE), Tony Martinelli (CDS)
Date Started: 11/11/11 Date Finished: 11/15/11
VTSPG NAD83: N 233043.05 ft E 1639670.68 ft
Station: Offset:
Ground Elevation: 452.0 ft

	Casing	Sampler
Type:	PW	SS
I.D.:	5 in	1.25 in
Hammer Wt:	N.A.	140 lb.
Hammer Fall:	N.A.	30 in.
Hammer/Rod Type:	Auto/AWJ	
Rig:	Truck Mount D-120	C_E =

Groundwater Observations

Date	Depth (ft)	Notes

Depth (ft)	Strata (1)	CLASSIFICATION OF MATERIALS (Description)	Run (Dip deg.)	Blows/6" (N Value)	Moisture Content %	Gravel %	Sand %	Fines %
				47-50-4" (83)				
55		Rec. = 0.5 ft		21-50-4"				
60		Rec. = 0.3 ft		71-6"				
65		Rec. = 0.8 ft		22-36-50-5"				
		Gray silty gravelly SAND with occasional cobbles, 68.0 ft - 95.0 ft, (TILL)						
70		Rec. = 0.3 ft		50-6"				
75		Rec. = 0.25 ft		50-5"				
80		Rec. = 0.3 ft		30-37-72-25-1"				
85		Rec. = 0.2 ft		50-3"				
90		Rec. = 0.3 ft		94-6"				
		Rec. = 0.3 ft		70-82				
95		Weathered ROCK, 95.0 ft - 96.0 ft						
		BEDROCK, 96.0 ft - 106.0 ftNQ	R-1	Top of Bedrock @ 96.0 ft				

Notes:
1. Stratification lines represent approximate boundary between material types. Transition may be gradual.
2. N Values have not been corrected for hammer energy. C_E is the hammer energy correction factor.
3. Water level readings have been made at times and under conditions stated. Fluctuations of groundwater may occur due to other factors than those present at the time measurements were made.

2010 COPY 11-1030.GPJ \ VERMONT AOT.GDT 12/21/12

STATE OF VERMONT
AGENCY OF TRANSPORTATION
MATERIALS & RESEARCH SECTION
SUBSURFACE INFORMATION

BORING LOG

BRF 0126(12) Bridge Replacement Proj.
Route 121 over the Saxton River
Rockingham, Vermont

Boring No.: **B- 1**
Page No.: 3 of 3
Pin No.:
Checked By:

Boring Crew: Nate Seguin (SWCE), Tony Martinelli (CDS)
Date Started: 11/11/11 Date Finished: 11/15/11
VTSPG NAD83: N 233043.05 ft E 1639670.68 ft
Station: Offset:
Ground Elevation: 452.0 ft

	Casing	Sampler
Type:	PW	SS
I.D.:	5 in	1.25 in
Hammer Wt:	N.A.	140 lb.
Hammer Fall:	N.A.	30 in.
Hammer/Rod Type:	Auto/AWJ	
Rig:	Truck Mount D-120	C_E =

Groundwater Observations

Date	Depth (ft)	Notes

Depth (ft)	Strata (1)	CLASSIFICATION OF MATERIALS (Description)	Run (Dip deg.)	Blows/6" (N Value)	Moisture Content %	Gravel %	Sand %	Fines %
105								
		Hole stopped @ 106.0 ft						
110								
115								
120								
125								
130								
135								
140								
145								

Notes:
1. Stratification lines represent approximate boundary between material types. Transition may be gradual.
2. N Values have not been corrected for hammer energy. C_E is the hammer energy correction factor.
3. Water level readings have been made at times and under conditions stated. Fluctuations of groundwater may occur due to other factors than those present at the time measurements were made.

2010 COPY 11-1030.GPJ \ VERMONT AOT.GDT 12/21/12

PROJECT NAME: ROCKINGHAM
PROJECT NUMBER: BRF 0126(12)

T·Y·LIN INTERNATIONAL

FILE NAME: z10J072bdr_bor1.dgn
PROJECT LEADER: R. HEBERT
DESIGNED BY: S. KELLER
BORING LOG (1 OF 4)

PLOT DATE: 7/28/2014
DRAWN BY: T. KELLEY
CHECKED BY: S. KELLER
SHEET 22 OF 69

STATE OF VERMONT
AGENCY OF TRANSPORTATION
MATERIALS & RESEARCH SECTION
SUBSURFACE INFORMATION

BORING LOG

BRF 0126(12) Bridge Replacement Proj.
Route 121 over the Saxton River
Rockingham, Vermont

Boring No.: **B- 2**
Page No.: 1 of 2
PIn No.:
Checked By:

Boring Crew: Nate Seguin (SWCE), Tony Martinelli (CDS)
Date Started: 11/17/11 Date Finished: 11/17/11
VTSPG NAD83: N 233074.93 ft E 1639742.67 ft
Station: Offset:
Ground Elevation: 451.0 ft

	Casing	Sampler
Type:	HW	SS
I.D.:	4 in	1.25 in
Hammer Wt:	N.A.	140 lb.
Hammer Fall:	N.A.	30 in.
Hammer/Rod Type:	Auto/AWJ	
Rig: Truck Mount D-120	C_E =	

Groundwater Observations

Date	Depth (ft)	Notes

Depth (ft)	Strata (1)	CLASSIFICATION OF MATERIALS (Description)	Blows/6" (N Value)	Moisture Content %	Gravel %	Sand %	Fines %
		BITUMINOUS PAVEMENT, 0.0 ft - 0.3 ft					
		REINFORCED CONCRETE, 0.3 ft - 0.8 ft					
		Open air, 0.8 ft - 26.0 ft					
5							
10							
15							
20							
25		River Bottom Alluvial soils, cobbles, 26.0 ft - 32.0 ft					
30							
		Gray silty SAND with some gravel, 32.0 ft - 63.0 ft, (TILL)					
35		Rec. = 0.4 ft	82-63-56 (119)				
40		Rec. = 1.5 ft	25-33-37-25 (70)				
45		Rec. = 0.75 ft	30-44-50-5"				
		Rec. = 1.0 ft	20-26-				

BOTTOM OF EXISTING
PIER. NO. 1
ELEV. = 413.8 ±

Notes:
1. Stratification lines represent approximate boundary between material types. Transition may be gradual.
2. N Values have not been corrected for hammer energy. C_E is the hammer energy correction factor.
3. Water level readings have been made at times and under conditions stated. Fluctuations of groundwater may occur due to other factors than those present at the time measurements were made.

2010 COPY 11-1030.GPJ VERMONT AOT.GDT 12/21/12

STATE OF VERMONT
AGENCY OF TRANSPORTATION
MATERIALS & RESEARCH SECTION
SUBSURFACE INFORMATION

BORING LOG

BRF 0126(12) Bridge Replacement Proj.
Route 121 over the Saxton River
Rockingham, Vermont

Boring No.: **B- 2**
Page No.: 2 of 2
PIn No.:
Checked By:

Boring Crew: Nate Seguin (SWCE), Tony Martinelli (CDS)
Date Started: 11/17/11 Date Finished: 11/17/11
VTSPG NAD83: N 233074.93 ft E 1639742.67 ft
Station: Offset:
Ground Elevation: 451.0 ft

	Casing	Sampler
Type:	HW	SS
I.D.:	4 in	1.25 in
Hammer Wt:	N.A.	140 lb.
Hammer Fall:	N.A.	30 in.
Hammer/Rod Type:	Auto/AWJ	
Rig: Truck Mount D-120	C_E =	

Groundwater Observations

Date	Depth (ft)	Notes

Depth (ft)	Strata (1)	CLASSIFICATION OF MATERIALS (Description)	Blows/6" (N Value)	Moisture Content %	Gravel %	Sand %	Fines %
			24-36 (50)				
55		Rec. = 0.7 ft	73-75-3"				
60		Rec. = 0.8 ft	54-50-5"				
		Gray silty SAND with some gravel with occasional cobbles, 63.0 ft - 69.5 ft, (TILL)					
65		Rec. = 0.5 ft	75-6"				
70		Rec. = 0.3 ft	69-6"				
		Hole stopped @ 69.5 ft					
75							
80							
85							
90							
95							

Notes:
1. Stratification lines represent approximate boundary between material types. Transition may be gradual.
2. N Values have not been corrected for hammer energy. C_E is the hammer energy correction factor.
3. Water level readings have been made at times and under conditions stated. Fluctuations of groundwater may occur due to other factors than those present at the time measurements were made.

2010 COPY 11-1030.GPJ VERMONT AOT.GDT 12/21/12

PROJECT NAME: ROCKINGHAM
PROJECT NUMBER: BRF 0126(12)

T·Y·LIN INTERNATIONAL

FILE NAME: z10J072bdr_bor2.dgn
PROJECT LEADER: R. HEBERT
DESIGNED BY: S. KELLER
BORING LOG (2 OF 4)

PLOT DATE: 7/28/2014
DRAWN BY: T. KELLEY
CHECKED BY: S. KELLER
SHEET 23 OF 69

STATE OF VERMONT
AGENCY OF TRANSPORTATION
MATERIALS & RESEARCH SECTION
SUBSURFACE INFORMATION

BORING LOG

BRF 0126(12) Bridge Replacement Proj.
Route 121 over the Saxton River
Rockingham, Vermont

Boring No.: **B- 3**
Page No.: 1 of 2
Pin No.:
Checked By:

Boring Crew: Nate Seguin (SWCE), Tony Martinelli (CDS)
Date Started: 11/16/11 Date Finished: 11/16/11
VTSPG NAD83: N 233064.31 ft E 1639803.06 ft
Station: Offset:
Ground Elevation: 450.0 ft

	Casing	Sampler
Type:	HW	SS
I.D.:	4 in	1.25 in
Hammer Wt:	N.A.	140 lb.
Hammer Fall:	N.A.	30 in.
Hammer/Rod Type:	Auto/AW,J	
Rig: Truck Mount D-120	C_E =	

Groundwater Observations		
Date	Depth (ft)	Notes

Depth (ft)	Strata (1)	CLASSIFICATION OF MATERIALS (Description)	Blows/6" (N Value)	Moisture Content %	Gravel %	Sand %	Fines %
		BITUMINOUS PAVEMENT, 0.0 ft - 0.3 ft					
		REINFORCED CONCRETE, 0.3 ft - 0.8 ft					
		Open air, 0.8 ft - 27.0 ft					
5							
10							
15							
20							
25							
		Alluvial Soils? (silty sands), 27.0 ft - 33.0 ft					
30		Rec. = 0.0 ft	8-3-4-4 (7)				
		Gray silty SAND with some gravel, 33.0 ft - 58.0 ft, (TILL)					
35		Rec. = 0.6 ft	19-25-17-28 (42)				
40		Rec. = 0.7 ft	15-29-50 (79)				
45		Rec. = 0.8 ft	31-48-50-4"				

BOTTOM OF EXISTING
PIER. NO. 2
ELEV. = 413.8 ±

Notes:
1. Stratification lines represent approximate boundary between material types. Transition may be gradual.
2. N Values have not been corrected for hammer energy. C_E is the hammer energy correction factor.
3. Water level readings have been made at times and under conditions stated. Fluctuations of groundwater may occur due to other factors than those present at the time measurements were made.

2010 COPY 11-1030.GPJ VERMONT AOT.GDT 12/21/12

STATE OF VERMONT
AGENCY OF TRANSPORTATION
MATERIALS & RESEARCH SECTION
SUBSURFACE INFORMATION

BORING LOG

BRF 0126(12) Bridge Replacement Proj.
Route 121 over the Saxton River
Rockingham, Vermont

Boring No.: **B- 3**
Page No.: 2 of 2
Pin No.:
Checked By:

Boring Crew: Nate Seguin (SWCE), Tony Martinelli (CDS)
Date Started: 11/16/11 Date Finished: 11/16/11
VTSPG NAD83: N 233064.31 ft E 1639803.06 ft
Station: Offset:
Ground Elevation: 450.0 ft

	Casing	Sampler
Type:	HW	SS
I.D.:	4 in	1.25 in
Hammer Wt:	N.A.	140 lb.
Hammer Fall:	N.A.	30 in.
Hammer/Rod Type:	Auto/AW,J	
Rig: Truck Mount D-120	C_E =	

Groundwater Observations		
Date	Depth (ft)	Notes

Depth (ft)	Strata (1)	CLASSIFICATION OF MATERIALS (Description)	Blows/6" (N Value)	Moisture Content %	Gravel %	Sand %	Fines %
55		Rec. = 1.5 ft	19-31-37-41 (68)				
		Rec. = 0.6 ft	56-70				
		Gray gravelly silty SAND, 58.0 ft - 68.0 ft, (TILL)					
60		Rec. = 0.3 ft	100-5"				
65		Rec. = 0.25 ft	78-5"				
		Gray silty fine SAND with some gravel, 68.0 ft - 71.5 ft, (TILL)					
70		Rec. = 0.88 ft	21-37-50 (87)				
		Hole stopped @ 71.5 ft					
75							
80							
85							
90							
95							

Notes:
1. Stratification lines represent approximate boundary between material types. Transition may be gradual.
2. N Values have not been corrected for hammer energy. C_E is the hammer energy correction factor.
3. Water level readings have been made at times and under conditions stated. Fluctuations of groundwater may occur due to other factors than those present at the time measurements were made.

2010 COPY 11-1030.GPJ VERMONT AOT.GDT 12/21/12

PROJECT NAME: ROCKINGHAM
PROJECT NUMBER: BRF 0126(12)

T·Y·LIN INTERNATIONAL

FILE NAME: z10J072bdr_bor3.dgn
PROJECT LEADER: R. HEBERT
DESIGNED BY: S. KELLER
BORING LOG (3 OF 4)

PLOT DATE: 7/28/2014
DRAWN BY: T. KELLEY
CHECKED BY: S. KELLER
SHEET 24 OF 69

STATE OF VERMONT
AGENCY OF TRANSPORTATION
MATERIALS & RESEARCH SECTION
SUBSURFACE INFORMATION

BORING LOG

BRF 0126(12) Bridge Replacement Proj.
Route 121 over the Saxton River
Rockingham, Vermont

Boring No.: **B- 4**
Page No.: 1 of 2
Pin No.:
Checked By:

Boring Crew: Nate Seguin (SWCE), Tony Martinelli (CDS)
Date Started: 12/15/11 Date Finished: 12/16/11
VTSPG NAD83: N 233096.24 ft E 1639906.66 ft
Station: Offset:
Ground Elevation: 449.0 ft

	Casing	Sampler
Type:	HW	SS
I.D.:	4 in	1.25 in
Hammer Wt:	N.A.	140 lb.
Hammer Fall:	N.A.	30 in.
Hammer/Rod Type:	Auto/AWJ	
Rig: Truck Mount D-120	C_E =	

Groundwater Observations

Date	Depth (ft)	Notes

Depth (ft)	Strata (1)	CLASSIFICATION OF MATERIALS (Description)	Blows/6" (N Value)	Moisture Content %	Gravel %	Sand %	Fines %
		BITUMINOUS PAVEMENT, Rec. = 1.0 ft, 0.0 ft - 0.3 ft	17-15-16-19				
		Dark brown silty gravelly Sand, 0.3 ft - 1.0 ft					
		Brown silty SAND with some gravel, 1.0 ft - 18.0 ft, (FILL)					
5		Rec. = 0.8 ft	10-7-7-6				
10		Rec. = 0.8 ft	6-2-3-3				
15		Rec. = 0.8 ft	9-5-6-6				
		Gray-brown silty gravelly SAND, 18.0 ft - 36.0 ft, (TILL)					
20		Rec. = 0.66 ft	23-13-18-50-5"				
25		Rec. = 0.8 ft	13-15-17-17				
30		Rec. = 1.3 ft	23-24-30-39				
35		Rec. = 1.0 ft	22-28-37-37				
		With occasional cobbles, 36.0 ft - 46.0 ft					
40		Rec. = 0.8 ft	24-26-24-26				
45		Rec. = 0.66 ft	58-50-4"				
		Changing to brown, 46.0 ft - 58.0 ft					
		Rec. = 0.66 ft	44-25-				

Notes:
1. Stratification lines represent approximate boundary between material types. Transition may be gradual.
2. N Values have not been corrected for hammer energy. C_E is the hammer energy correction factor.
3. Water level readings have been made at times and under conditions stated. Fluctuations of groundwater may occur due to other factors than those present at the time measurements were made.

BOTTOM OF
ABUT. NO. 2
ELEV. = 441.00

ESTIMATED PILE TIP
@ ABUT. NO. 2
ELEV. = 367.00

2010 COPY 11-1030.GPJ VERMONT AOT.GDT 12/21/12

STATE OF VERMONT
AGENCY OF TRANSPORTATION
MATERIALS & RESEARCH SECTION
SUBSURFACE INFORMATION

BORING LOG

BRF 0126(12) Bridge Replacement Proj.
Route 121 over the Saxton River
Rockingham, Vermont

Boring No.: **B- 4**
Page No.: 2 of 2
Pin No.:
Checked By:

Boring Crew: Nate Seguin (SWCE), Tony Martinelli (CDS)
Date Started: 12/15/11 Date Finished: 12/16/11
VTSPG NAD83: N 233096.24 ft E 1639906.66 ft
Station: Offset:
Ground Elevation: 449.0 ft

	Casing	Sampler
Type:	HW	SS
I.D.:	4 in	1.25 in
Hammer Wt:	N.A.	140 lb.
Hammer Fall:	N.A.	30 in.
Hammer/Rod Type:	Auto/AWJ	
Rig: Truck Mount D-120	C_E =	

Groundwater Observations

Date	Depth (ft)	Notes

Depth (ft)	Strata (1)	CLASSIFICATION OF MATERIALS (Description)	Blows/6" (N Value)	Moisture Content %	Gravel %	Sand %	Fines %
			1"				
55		Rec. = 0.2 ft	50-6"				
		Gray-brown silty SAND with some gravel, 58.0 ft - 63.0 ft, (TILL)					
60		Rec. = 0.0 ft	50-5"				
		Gray-brown silty gravelly SAND, 63.0 ft - 69.6 ft, (TILL)					
65		Rec. = 0.0 ft	50-5"				
70		Rec. = 0.0 ft	47-25-1"				
		Hole stopped @ 69.6 ft					
75							
80							
85							
90							
95							

Notes:
1. Stratification lines represent approximate boundary between material types. Transition may be gradual.
2. N Values have not been corrected for hammer energy. C_E is the hammer energy correction factor.
3. Water level readings have been made at times and under conditions stated. Fluctuations of groundwater may occur due to other factors than those present at the time measurements were made.

2010 COPY 11-1030.GPJ VERMONT AOT.GDT 12/21/12

PROJECT NAME: ROCKINGHAM
PROJECT NUMBER: BRF 0126(12)

T·Y·LIN INTERNATIONAL

FILE NAME: z10J072bdr_bor4.dgn
PROJECT LEADER: R. HEBERT
DESIGNED BY: S. KELLER
BORING LOG (4 OF 4)

PLOT DATE: 7/28/2014
DRAWN BY: T. KELLEY
CHECKED BY: S. KELLER
SHEET 25 OF 69

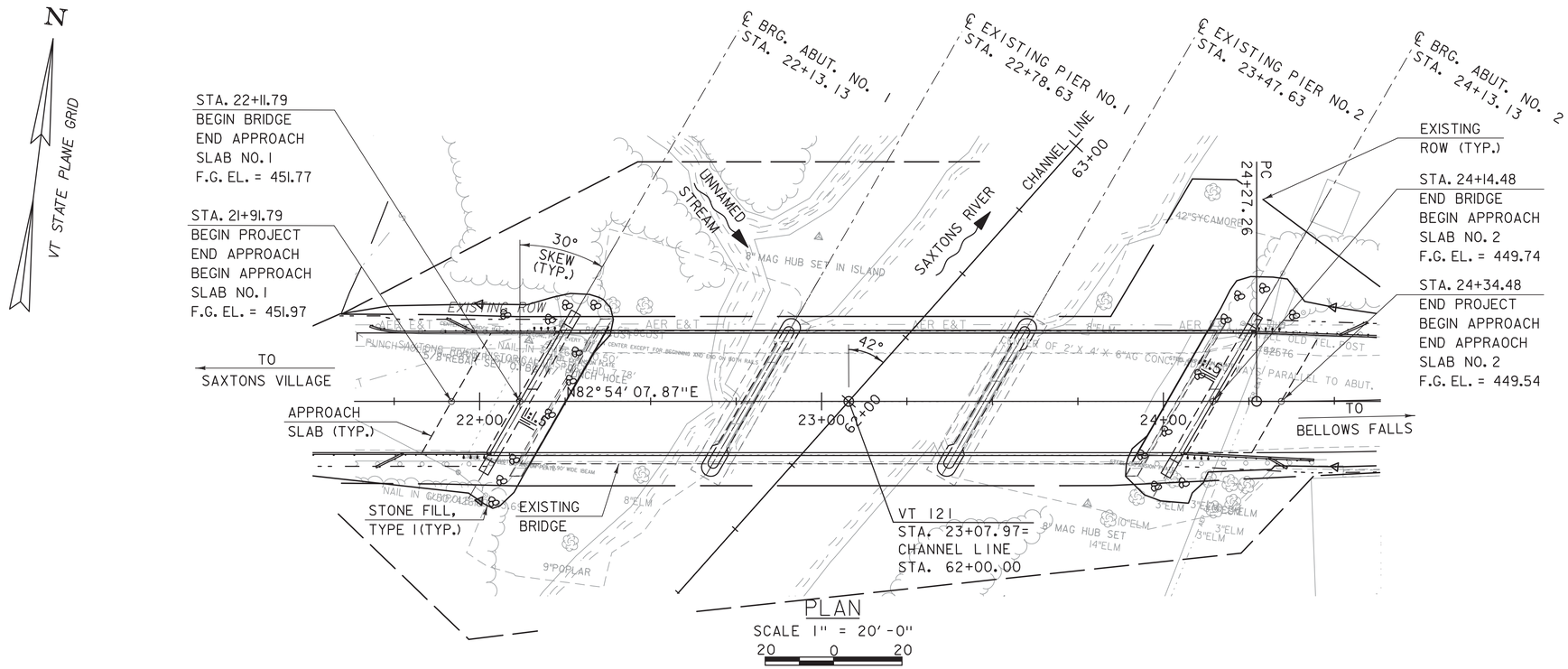

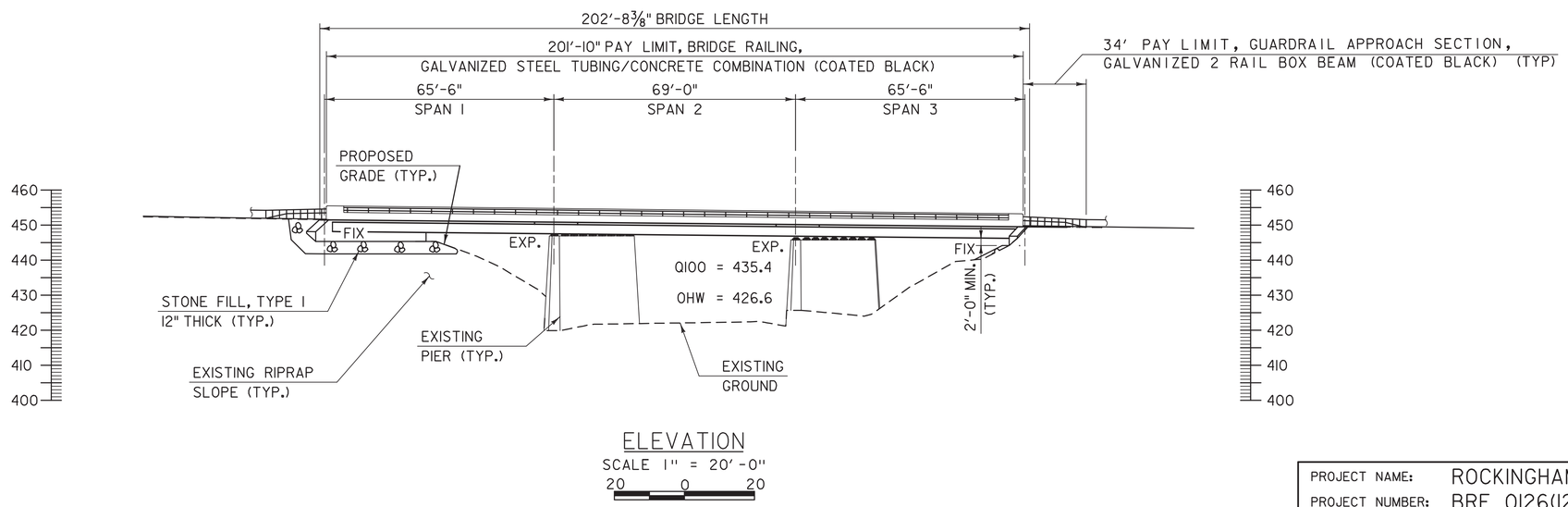

PROJECT NAME:	ROCKINGHAM
PROJECT NUMBER:	BRF 0126(12)

T·Y·LIN INTERNATIONAL

FILE NAME: z10J072bdr_gpe.dgn	PLOT DATE: 7/28/2014
PROJECT LEADER: R. HEBERT	DRAWN BY: D. AXTELL
DESIGNED BY: S. KELLER	CHECKED BY: T. POULIN
BRIDGE PLAN AND ELEVATION	SHEET 26 OF 69

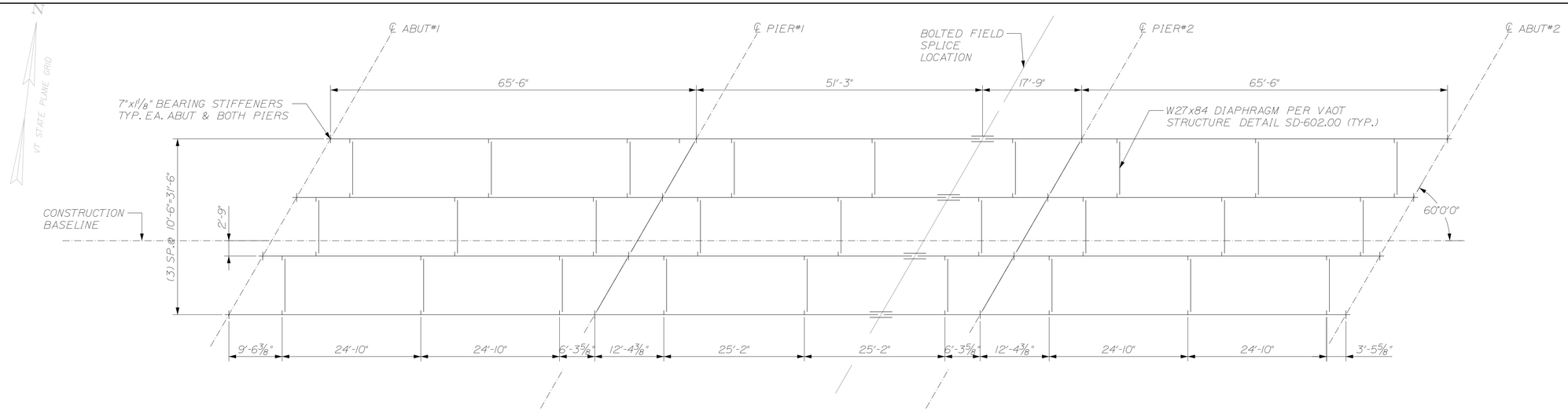

FRAMING PLAN
3/32" = 1'-0"

STRUCTURAL STEEL NOTES

1. ALL STEEL SHALL BE ASTM A709 GRADE 50W

2. FLEMING BRACKETS OR SIMILAR FALSEWORK SHALL BE SPACED AS REQUIRED BY DESIGN. BUT SHALL BE LIMITED TO A MAXIMUM SPACING OF 4'-0". THE DESIGN OF FALSEWORK SHALL BE THE RESPONSIBILITY OF THE CONTRACTOR.

3. ANY BOLT HOLES IN THE WEBS OF FASCIA GIRDERS NO OTHERWISE FILLED SHALL BE FILLED WITH BUTTON HEAD OR HEX HEAD TYPE 3 BOLTS. THE BOLTS SHALL BE TIGHTENED IN ACCORDANCE WITH SUBSECTION 506.19 OF THE STANDARD SPECIFICATIONS.

4. ENDS OF THE GIRDERS SHALL BE VERTICAL IN THEIR FINAL POSITION.

5. DUE TO STABILITY CONCERNS AT THE ABUTMENTS DURING THE ERECTION OF THE SUPERSTRUCTURE, THE CONTRACTOR SHALL SUBMIT THE ERECTION PLAN A MINIMUM OF 30 WORKING DAYS PRIOR TO ERECTING THE SUPERSTRUCTURE.

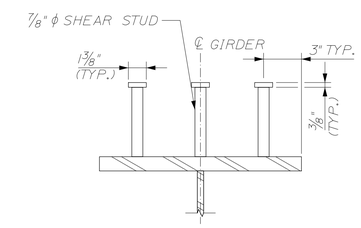

SHEAR STUD CONNECTOR DETAIL
2" = 1'-0"

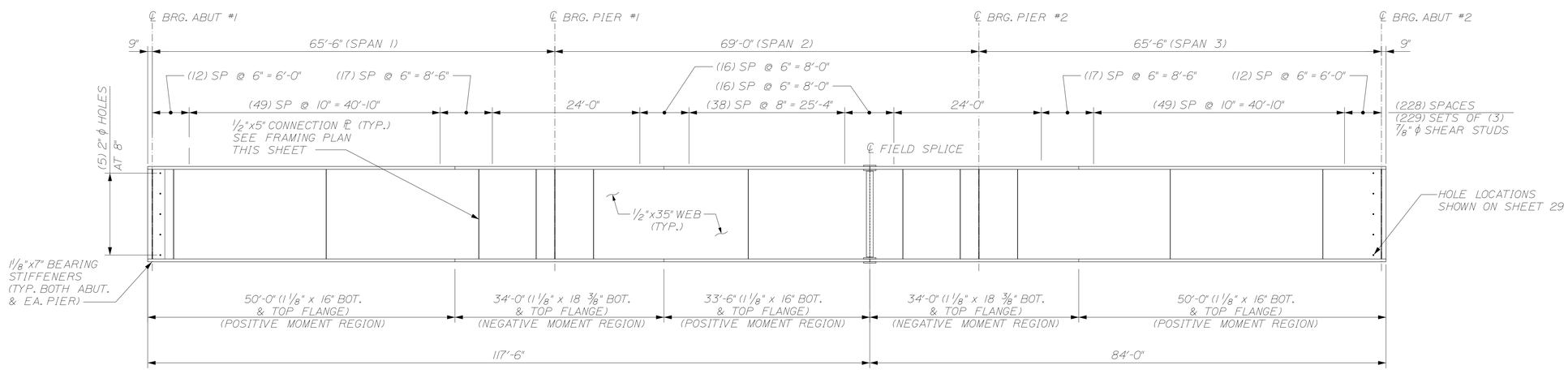

GIRDER ELEVATION
5V:1H

CALDERWOOD ENGINEERING, ETC.
STRUCTURAL ENGINEERING • DETAILING SERVICES
222 RIVER RD, RICHMOND, ME 04357 PH/FX (207)737-2007/(207) 737-2008

PREPARED FOR:
COLD RIVER BRIDGES, LLC

CEE 106-BR-14

P.E. NUMBER

DATE:

	BY	DATE
DESIGN-DETAILED	ETC	2014
CHECKED-REVIEWED		
REVISIONS 1		
REVISIONS 2		
REVISIONS 3		
REVISIONS 4		
FIELD CHANGES		

VE SUPER. DESIGN
ROCKINGHAM VT. BRF 0126 (12)

STEEL GIRDER DETAILS (1 OF 3)

SHEET NUMBER
27

CALDERWOOD ENGINEERING
222 RIVER ROAD
N. RICHMOND, ME 04357
PH. (207) 737-2007 FAX (207) 737-2008

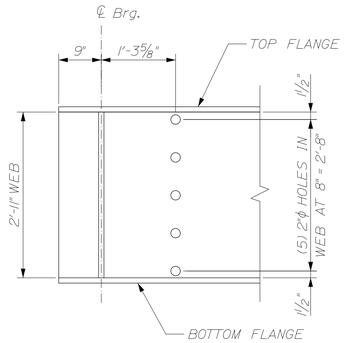

GIRDER END DETAIL
SCALE: 3/4" = 1'-0"

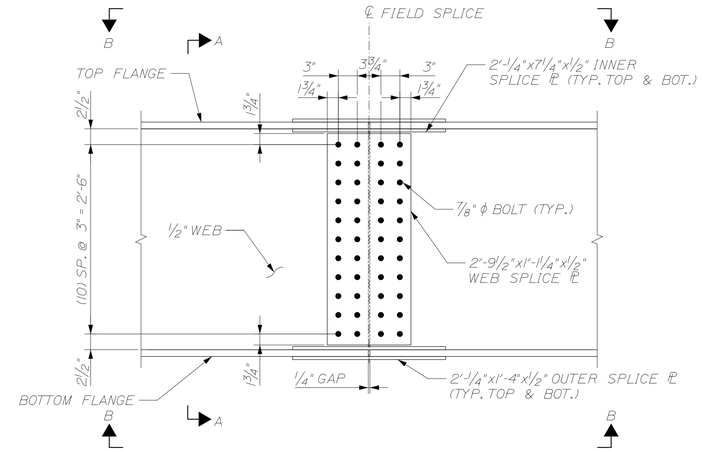

BOLTED FIELD SPLICE ELEVATION
1" = 1'-0"

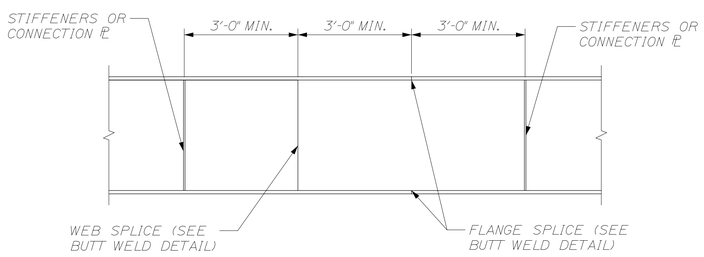

WELDED SPLICE TRANSITION
1/2" = 1'-0"

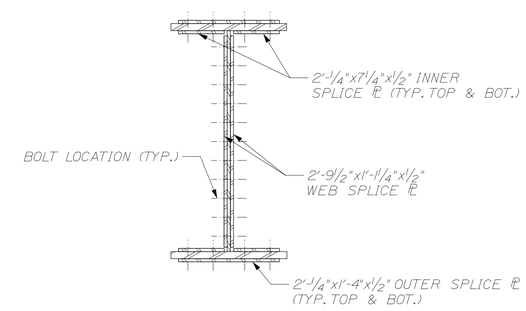

SECTION A-A
1" = 1'-0"

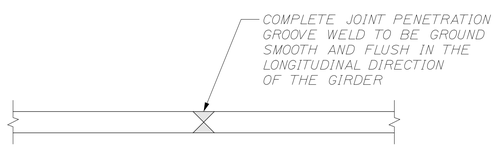

FLANGE OR WEB BET WELD
3" = 1'-0"

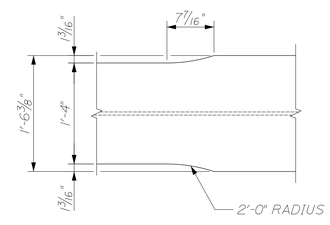

FLANGE WIDTH TRANSITION DETAIL
1" = 1'-0"

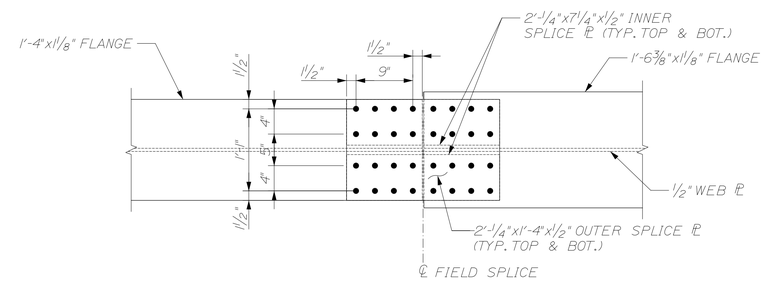

SECTION B-B
1" = 1'-0"

CALDERWOOD ENGINEERING, ETC.
STRUCTURAL ENGINEERING • DETAILING SERVICES
222 RIVER RD, RICHMOND, ME 04357 PH/FX (207)737-2007/(207) 737-2008

PREPARED FOR:
COLD RIVER BRIDGES, LLC

CEE 106-BR-14

P.E. NUMBER

DATE:

	BY	DATE
DESIGN-DETAILED	ETC	2014
CHECKED-REVIEWED		
REVISIONS 1		
REVISIONS 2		
REVISIONS 3		
REVISIONS 4		
FIELD CHANGES		

VE SUPER. DESIGN
ROCKINGHAM VT. BRF 0126 (12)

STEEL GIRDER DETAILS (2 OF 3)

SHEET NUMBER
28

CALDERWOOD ENGINEERING
1 222 RIVER ROAD
N. RICHMOND, ME 04357
PH. (207) 737-2007 FAX (207) 737-2008

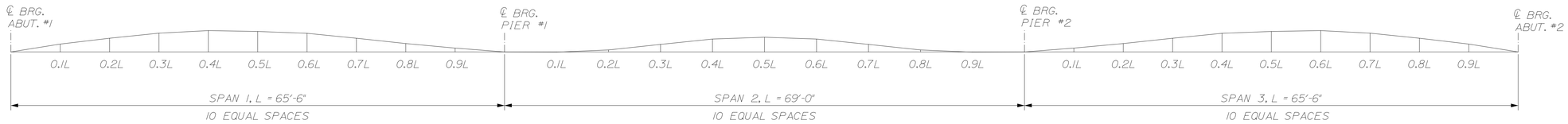

CAMBER DIAGRAM
N.T.S

Table of Camber -Exterior Girders (Inches)																														
	CL Brg Abut #1	0.1L	0.2L	0.3L	0.4L	0.5L	0.6L	0.7L	0.8L	0.9L	CL Brg Pier #1	0.1L	0.2L	0.3L	0.4L	0.5L	0.6L	0.7L	0.8L	0.9L	CL Brg Pier #2	0.1L	0.2L	0.3L	0.4L	0.5L	0.6L	0.7L	0.8L	0.9L	CL Brg Abut. #2
Steel Dead Load	0.00	0.04	0.07	0.10	0.11	0.11	0.09	0.07	0.04	0.02	0.00	0.00	0.00	0.01	0.02	0.02	0.02	0.01	0.00	0.00	0.00	0.02	0.04	0.07	0.09	0.11	0.11	0.10	0.07	0.04	0.00
Fluid Exterior	0.00	0.18	0.33	0.44	0.49	0.49	0.43	0.32	0.20	0.08	0.00	-0.02	0.01	0.05	0.08	0.09	0.08	0.05	0.01	-0.02	0.00	0.08	0.20	0.32	0.43	0.49	0.49	0.44	0.33	0.18	0.00
SIDL Ext	0.00	0.04	0.07	0.09	0.10	0.10	0.09	0.07	0.05	0.02	0.00	0.01	0.03	0.04	0.05	0.06	0.05	0.04	0.03	0.01	0.00	0.02	0.05	0.07	0.09	0.10	0.10	0.09	0.07	0.04	0.00
Residual Camber	0.00	0.38	0.63	0.88	1.00	0.94	0.88	0.63	0.38	0.19	0.00	0.00	0.13	0.50	0.88	1.00	0.88	0.50	0.13	0.00	0.00	0.19	0.38	0.63	0.88	0.94	1.00	0.88	0.63	0.38	0.00
Total Camber Ext	0.00	0.63	1.09	1.50	1.70	1.63	1.48	1.09	0.67	0.31	0.00	-0.02	0.16	0.60	1.03	1.17	1.03	0.60	0.16	-0.02	0.00	0.31	0.67	1.09	1.48	1.63	1.70	1.50	1.09	0.63	0.00

Table of Camber -Interior Girders (Inches)																														
	CL Brg Abut #1	0.1L	0.2L	0.3L	0.4L	0.5L	0.6L	0.7L	0.8L	0.9L	CL Brg Pier #1	0.1L	0.2L	0.3L	0.4L	0.5L	0.6L	0.7L	0.8L	0.9L	CL Brg Pier #2	0.1L	0.2L	0.3L	0.4L	0.5L	0.6L	0.7L	0.8L	0.9L	CL Brg Abut. #2
Steel Dead Load	0.00	0.04	0.07	0.10	0.11	0.11	0.09	0.07	0.04	0.02	0.00	0.00	0.00	0.01	0.02	0.02	0.02	0.01	0.00	0.00	0.00	0.02	0.04	0.07	0.09	0.11	0.11	0.10	0.07	0.04	0.00
Fluid Interior	0.00	0.24	0.44	0.59	0.66	0.65	0.57	0.44	0.27	0.11	0.00	-0.03	0.01	0.06	0.11	0.12	0.11	0.06	0.01	-0.03	0.00	0.11	0.27	0.44	0.57	0.65	0.66	0.59	0.44	0.24	0.00
SIDL Int	0.00	0.04	0.07	0.09	0.11	0.11	0.10	0.08	0.05	0.02	0.00	0.01	0.03	0.05	0.06	0.06	0.06	0.05	0.03	0.01	0.00	0.02	0.05	0.08	0.10	0.11	0.11	0.09	0.07	0.04	0.00
Residual Camber	0.00	0.38	0.63	0.88	1.00	0.94	0.88	0.63	0.38	0.19	0.00	0.00	0.13	0.50	0.88	1.00	0.88	0.50	0.13	0.00	0.00	0.19	0.38	0.63	0.88	0.94	1.00	0.88	0.63	0.38	0.00
Total Camber Int	0.00	0.69	1.21	1.65	1.87	1.80	1.64	1.21	0.74	0.34	0.00	-0.02	0.16	0.62	1.06	1.21	1.06	0.62	0.16	-0.02	0.00	0.34	0.74	1.21	1.64	1.80	1.87	1.65	1.21	0.69	0.00

Bottom of Slab Elevations																														
	CL Brg Abut #1	0.1L	0.2L	0.3L	0.4L	0.5L	0.6L	0.7L	0.8L	0.9L	CL Brg Pier #1	0.1L	0.2L	0.3L	0.4L	0.5L	0.6L	0.7L	0.8L	0.9L	CL Brg Pier #2	0.1L	0.2L	0.3L	0.4L	0.5L	0.6L	0.7L	0.8L	0.9L	CL Brg Abut. #2
G1	450.27	450.22	450.17	450.11	450.05	449.99	449.92	449.84	449.76	449.68	449.61	449.54	449.47	449.41	449.35	449.28	449.21	449.13	449.06	448.99	448.92	448.86	448.81	448.76	448.70	448.64	448.58	448.51	448.43	448.35	448.27
G2	450.54	450.49	450.45	450.40	450.34	450.27	450.20	450.12	450.04	449.96	449.88	449.81	449.75	449.68	449.62	449.55	449.48	449.41	449.33	449.26	449.19	449.14	449.09	449.04	448.98	448.93	448.86	448.79	448.71	448.62	448.54
G3	450.70	450.65	450.61	450.56	450.50	450.43	450.36	450.28	450.20	450.12	450.04	449.97	449.91	449.84	449.78	449.71	449.64	449.57	449.49	449.42	449.35	449.30	449.25	449.20	449.15	449.09	449.02	448.95	448.87	448.79	448.70
G4	450.55	450.50	450.45	450.39	450.33	450.27	450.20	450.12	450.04	449.97	449.89	449.82	449.76	449.69	449.63	449.56	449.49	449.42	449.34	449.27	449.20	449.15	449.09	449.04	448.98	448.92	448.86	448.79	448.71	448.63	448.55

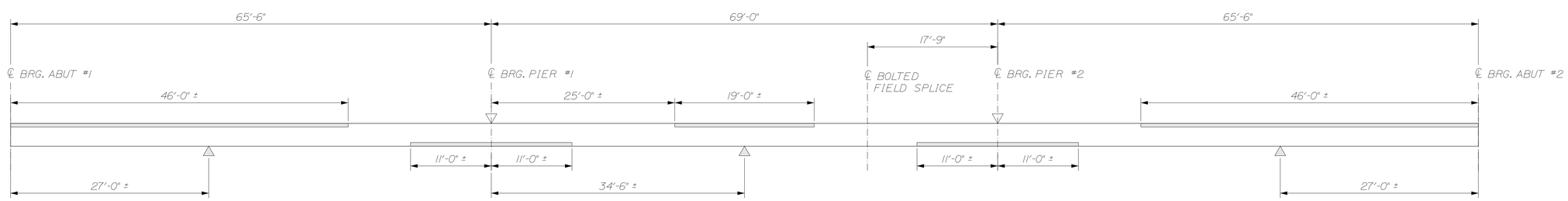

GIRDER STRESS DIAGRAM

▽ = MAXIMUM NEGATIVE MOMENT

△ = MAXIMUM POSITIVE MOMENT

SHADED AREAS ARE ALWAYS IN COMPRESSION
OTHER AREAS ARE IN TENSION OR HAVE STRESS REVERSAL

CALDERWOOD ENGINEERING, ETC.
STRUCTURAL ENGINEERING • DETAILING SERVICES
222 RIVER RD, RICHMOND, ME 04357 PH/FX (207)737-2007/(207) 737-2008

PREPARED FOR:
COLD RIVER BRIDGES, LLC

CEE 106-BR-14

P.E. NUMBER

DATE:

BY	DATE
ETC	2014

DESIGN-DETAILED
CHECKED-REVIEWED

REVISIONS 1
REVISIONS 2
REVISIONS 3
REVISIONS 4
FIELD CHANGES

VE SUPER. DESIGN
ROCKINGHAM VT. BRF 0126 (12)

STEEL GIRDER DETAILS (3 OF 3)

SHEET NUMBER

28a

CALDERWOOD ENGINEERING
222 RIVER ROAD
RICHMOND, ME 04357
PH. (207) 737-2007 FAX (207) 737-2008

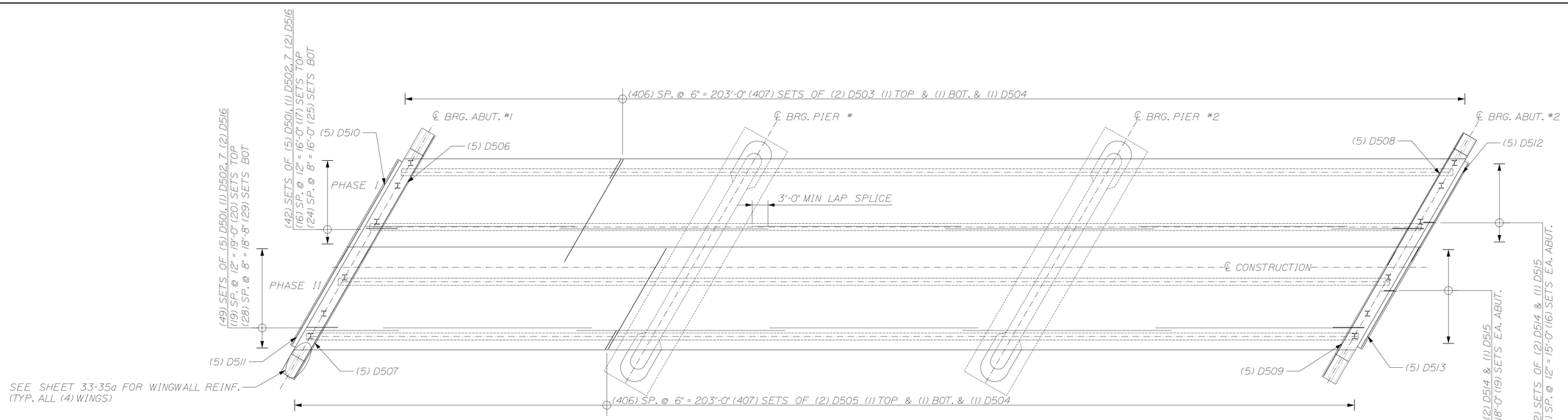

DECK REINFORCEMENT PLAN VIEW
3/32" = 1'-0"

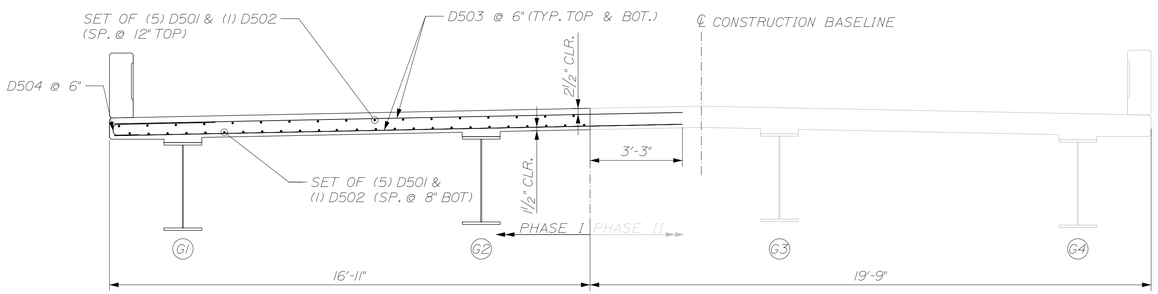

PHASE I DECK REINF. SECTION
3/8" = 1'-0"

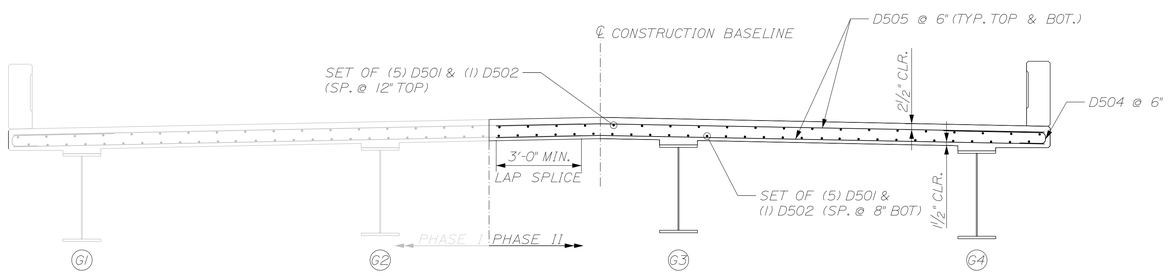

PHASE II DECK REINF. SECTION
3/8" = 1'-0"

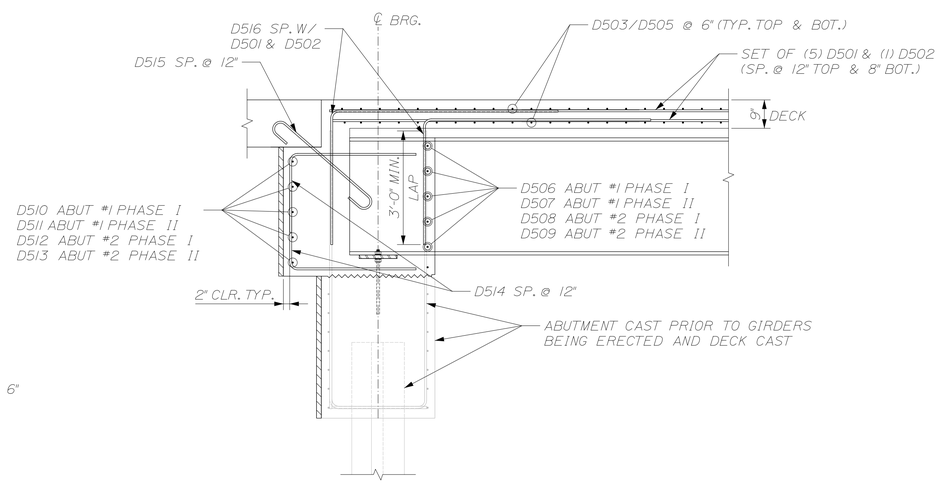

END REINF. DETAIL
1/2" = 1'-0"

CALDERWOOD ENGINEERING, ETC.
STRUCTURAL ENGINEERING • DETAILING SERVICES
222 RIVER RD. RICHMOND, ME 04357 PH/FX (207)737-2007/(207) 737-2008

PREPARED FOR:
COLD RIVER BRIDGES, LLC

CEE 106-BR-14

P.E. NUMBER

DATE:

	BY	DATE
DESIGN-DETAILED	ETC	2014
CHECKED-REVIEWED		
REVISIONS 1		
REVISIONS 2		
REVISIONS 3		
REVISIONS 4		
FIELD CHANGES		

VE SUPER. DESIGN
ROCKINGHAM VT. BRF 0126 (12)

SUPERSTRUCTURE REINF. DETAILS

SHEET NUMBER

29

CALDERWOOD ENGINEERING
222 RIVER ROAD
RICHMOND, ME 04357
PH. (207) 737-2007 FAX (207) 737-2008

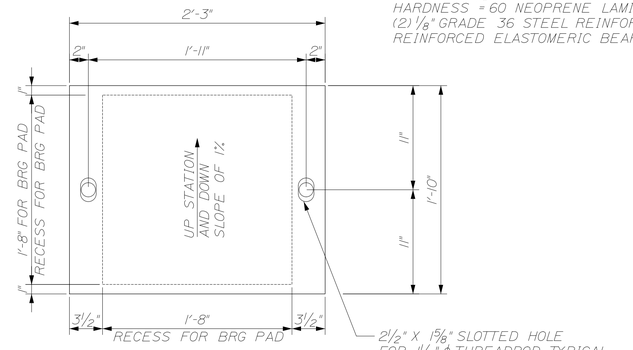

SOLE PLATE DETAIL

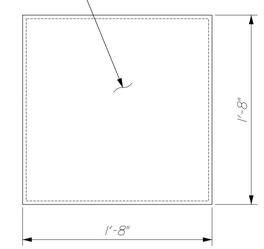

BEARING PAD PLAN DETAIL

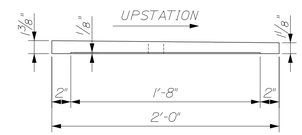

SECTION THRU SOLE PLATE

PIER BEARINGS

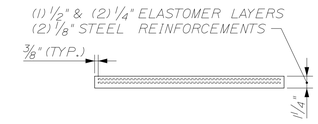

BEARING PAD ELEV. DETAIL

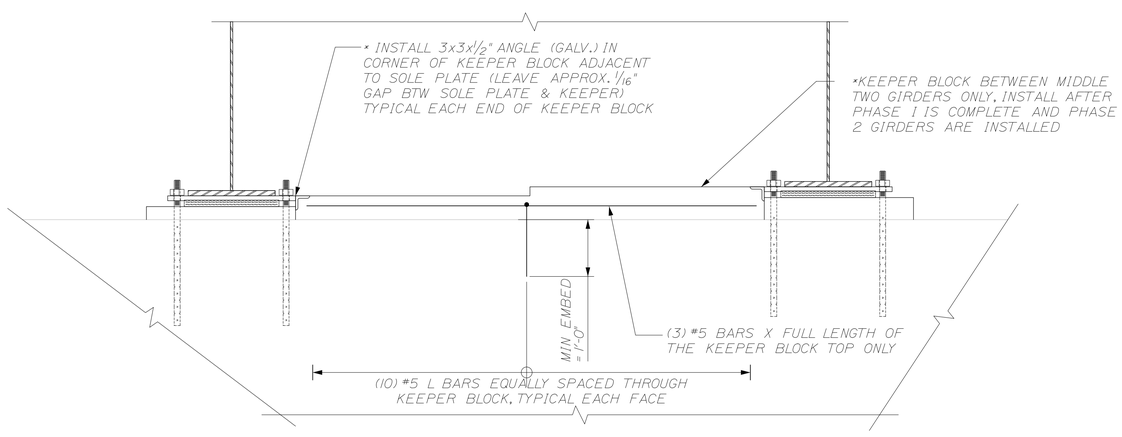

KEEPER BLOCK ELEVATION - INSTALL BETWEEN GIRDER LINES 2 & 3 AT EACH PIER

SCALE: 3/4" : 1

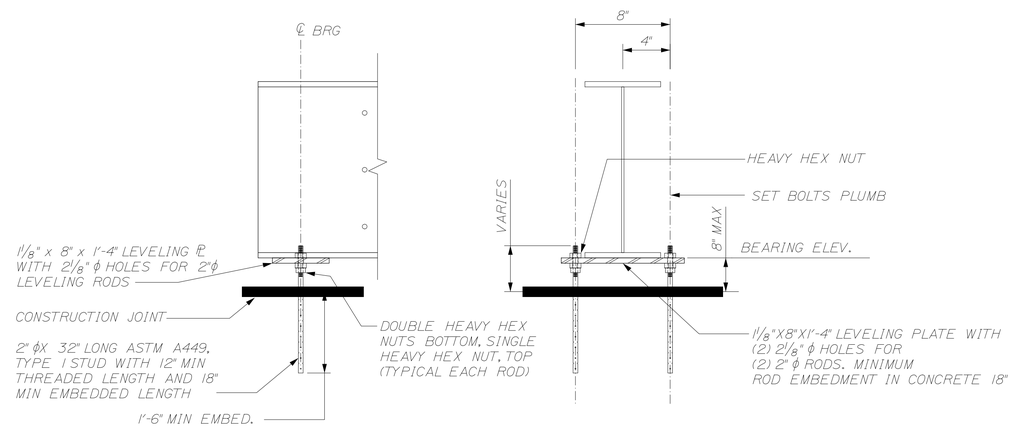

ANCHORAGE & BEARING DETAILS

SCALE: 3/4" : 1

CALDERWOOD ENGINEERING, ETC.
STRUCTURAL ENGINEERING • DETAILING SERVICES
222 RIVER RD, RICHMOND, ME 04357 PH/FX (207)737-2007/(207) 737-2008

PREPARED FOR:
COLD RIVER BRIDGES, LLC

CEE 106-BR-14

	BY	DATE
DESIGN-DETAILED	ETC	2014
CHECKED-REVIEWED		
REVISIONS 1		
REVISIONS 2		
REVISIONS 3		
REVISIONS 4		
FIELD CHANGES		

P.E. NUMBER

DATE:

VE SUPER. DESIGN
ROCKINGHAM VT. BRF 0126 (12)

ELASTOMERIC BEARING DETAILS

SHEET NUMBER

31

CALDERWOOD ENGINEERING
222 RIVER ROAD
RICHMOND, ME 04357
PH. (207) 737-2007 FAX (207) 737-2008

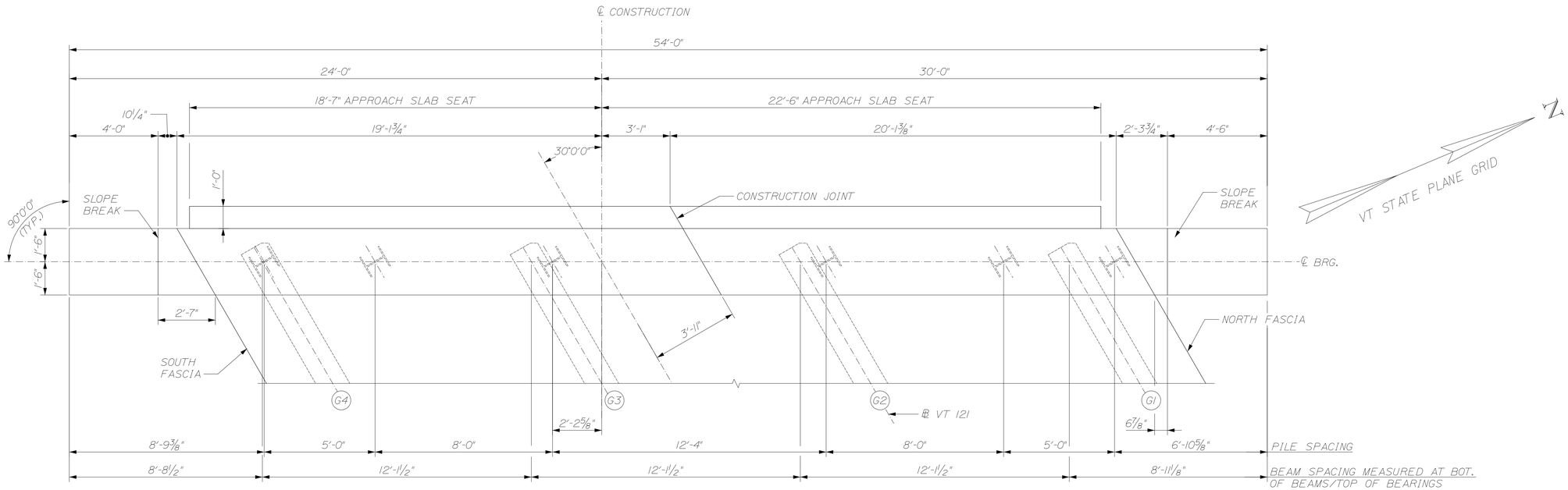

ABUTMENT #1 PLAN

PHASE II

PHASE I

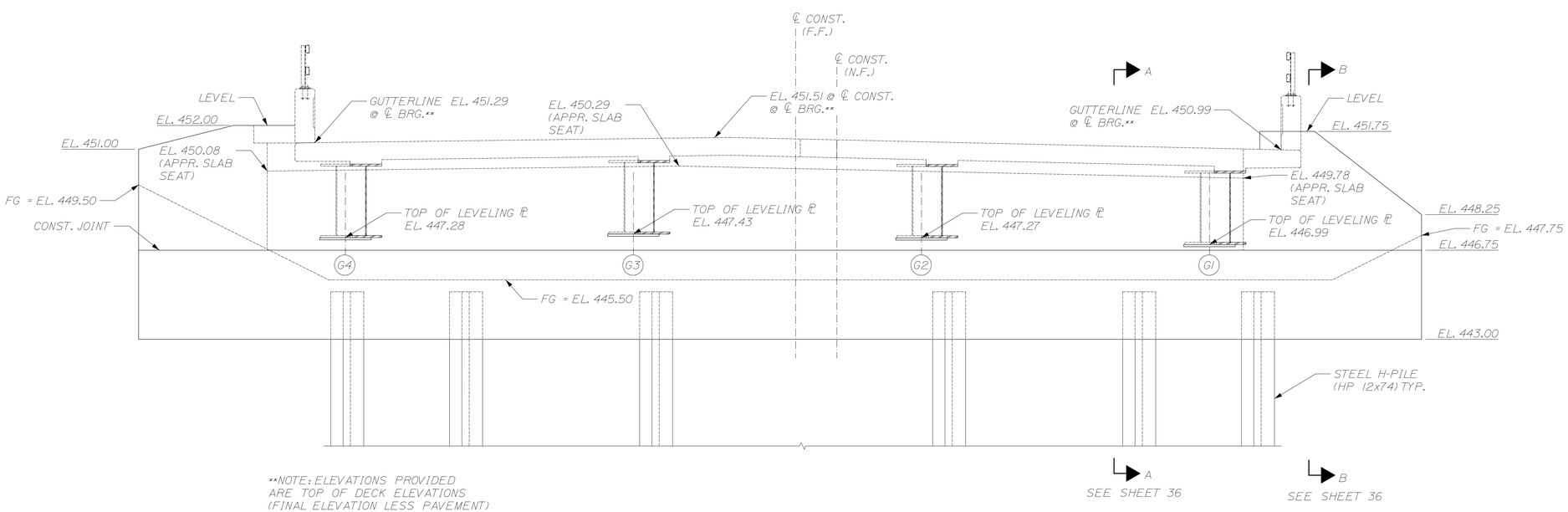

**NOTE: ELEVATIONS PROVIDED ARE TOP OF DECK ELEVATIONS (FINAL ELEVATION LESS PAVEMENT)

ABUTMENT #1 ELEVATION

⅜"=1'-0"

NOTE: FRONT FACE OF DECK & RAIL ONLY SHOWN FOR CLARITY

CALDERWOOD ENGINEERING, ETC.
STRUCTURAL ENGINEERING • DETAILING SERVICES
222 RIVER RD, RICHMOND, ME 04357 PH/FX (207)737-2007/(207) 737-2008

PREPARED FOR:
COLD RIVER BRIDGES, LLC

CEE 106-BR-14

	BY	DATE
DESIGN-DETAILED	ETC	2014
CHECKED-REVIEWED		
REVISIONS 1		
REVISIONS 2		
REVISIONS 3		
REVISIONS 4		
FIELD CHANGES		

P.E. NUMBER

DATE:

VE SUPER. DESIGN
ROCKINGHAM VT. BRF 0126 (12)

ABUTMENT 1 MASONRY

SHEET NUMBER

32

CALDERWOOD ENGINEERING
222 RIVER ROAD
RICHMOND, ME 04357
PH. (207) 737-2007 FAX (207) 737-2008

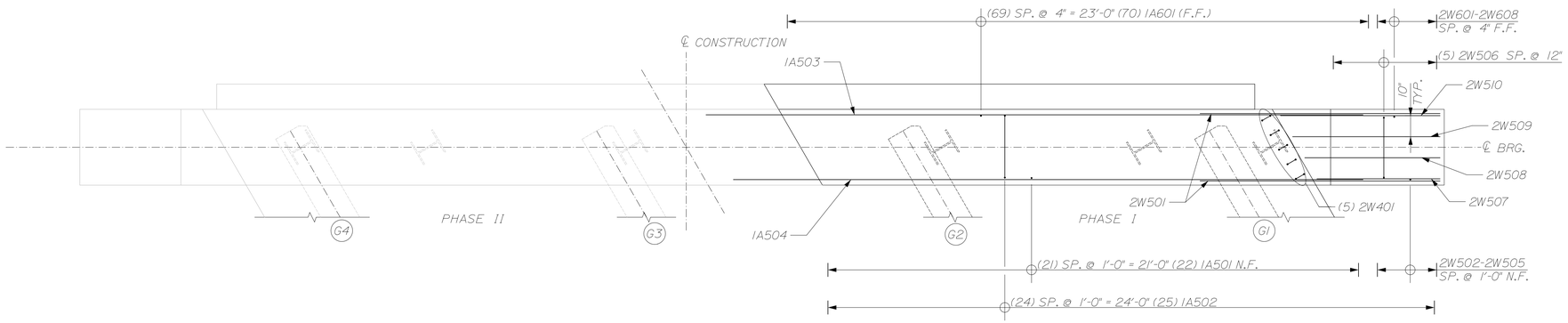

ABUTMENT #1 PLAN ~ PHASE I REINFORCEMENT

3/8"=1'-0"

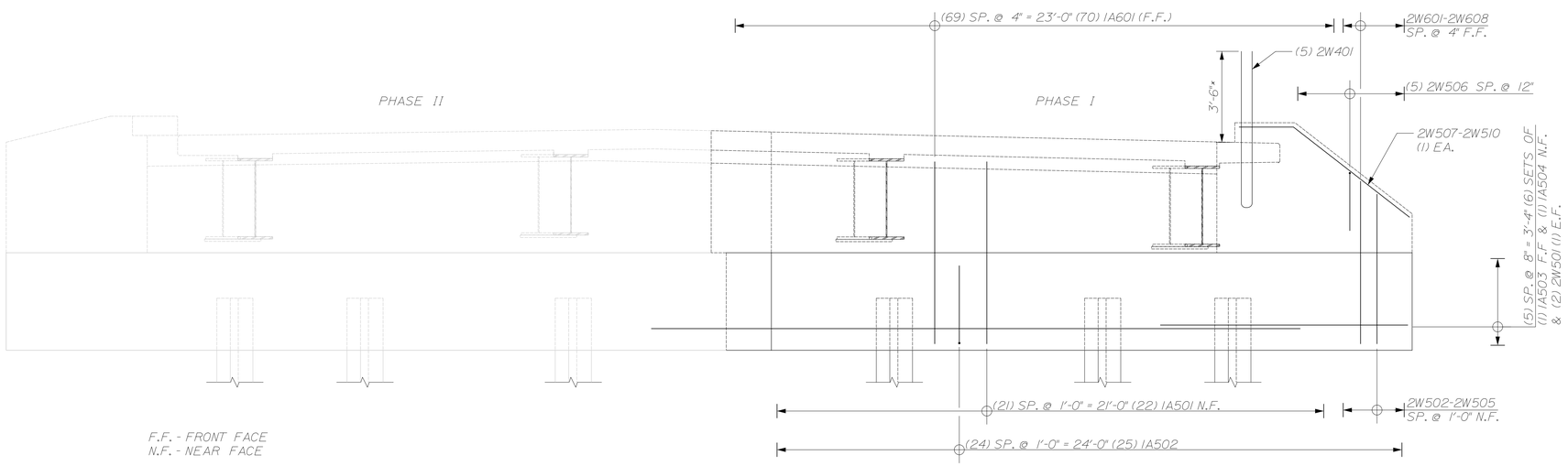

F.F. - FRONT FACE
N.F. - NEAR FACE

ABUTMENT #1 ELEVATION ~ PHASE I REINFORCEMENT

3/8"=1'-0"

* TRIM 2W401 BARS IN FIELD AS NEEDED TO MAINTAIN COVER TO TOP OF CONCRETE BRIDGE RAILING END POST

CALDERWOOD ENGINEERING, ETC.
STRUCTURAL ENGINEERING • DETAILING SERVICES
222 RIVER RD, RICHMOND, ME 04357 PH/FX (207)737-2007/(207) 737-2008

PREPARED FOR:
COLD RIVER BRIDGES, LLC

CEE 106-BR-14

	BY	DATE
DESIGN-DETAILED	ETC	2014
CHECKED-REVIEWED		
REVISIONS 1		
REVISIONS 2		
REVISIONS 3		
REVISIONS 4		
FIELD CHANGES		

P.E. NUMBER

DATE:

VE SUPER. DESIGN
ROCKINGHAM VT. BRF 0126 (12)

ABUTMENT 1 PHASE I REINFORCEMENT

SHEET NUMBER

33

CALDERWOOD ENGINEERING
222 RIVER ROAD
RICHMOND, ME 04357
PH. (207) 737-2007 FAX (207) 737-2008

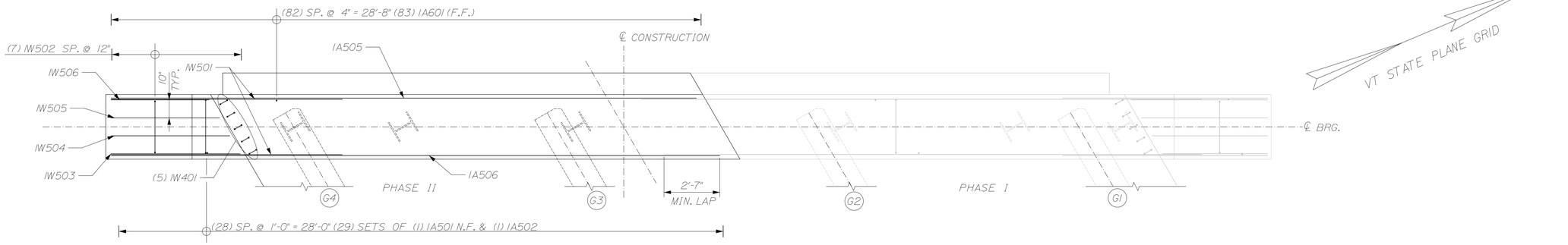

ABUTMENT #1 PLAN ~ PHASE II REINFORCEMENT
3/8"=1'-0"

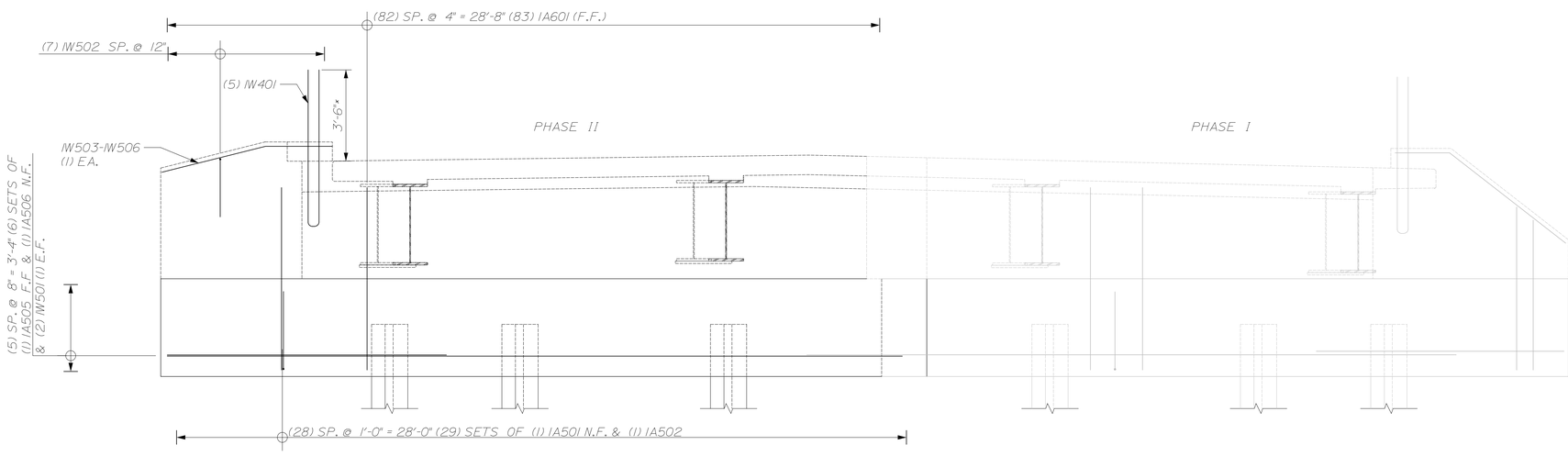

F.F. - FRONT FACE
N.F. - NEAR FACE

* TRIM IW401 BARS IN FIELD AS NEEDED TO MAINTAIN COVER TO TOP OF CONCRETE BRIDGE RAILING END POST

ABUTMENT #1 ELEVATION ~ PHASE II REINFORCEMENT
3/8"=1'-0"

CALDERWOOD ENGINEERING, ETC.
STRUCTURAL ENGINEERING • DETAILING SERVICES
222 RIVER RD, RICHMOND, ME 04357 PH/FX (207)737-2007/(207) 737-2008

PREPARED FOR:
COLD RIVER BRIDGES, LLC

CEE 106-BR-14

P.E. NUMBER

DATE:

	BY	DATE
DESIGN-DETAILED	ETC	2014
CHECKED-REVIEWED		
REVISIONS 1		
REVISIONS 2		
REVISIONS 3		
REVISIONS 4		
FIELD CHANGES		

VE SUPER. DESIGN
ROCKINGHAM VT. BRF 0126 (12)

ABUTMENT 1 PHASE II REINFORCEMENT

SHEET NUMBER

33a

CALDERWOOD ENGINEERING
222 RIVER ROAD
RICHMOND, ME 04357
PH. (207) 737-2007 FAX (207) 737-2008

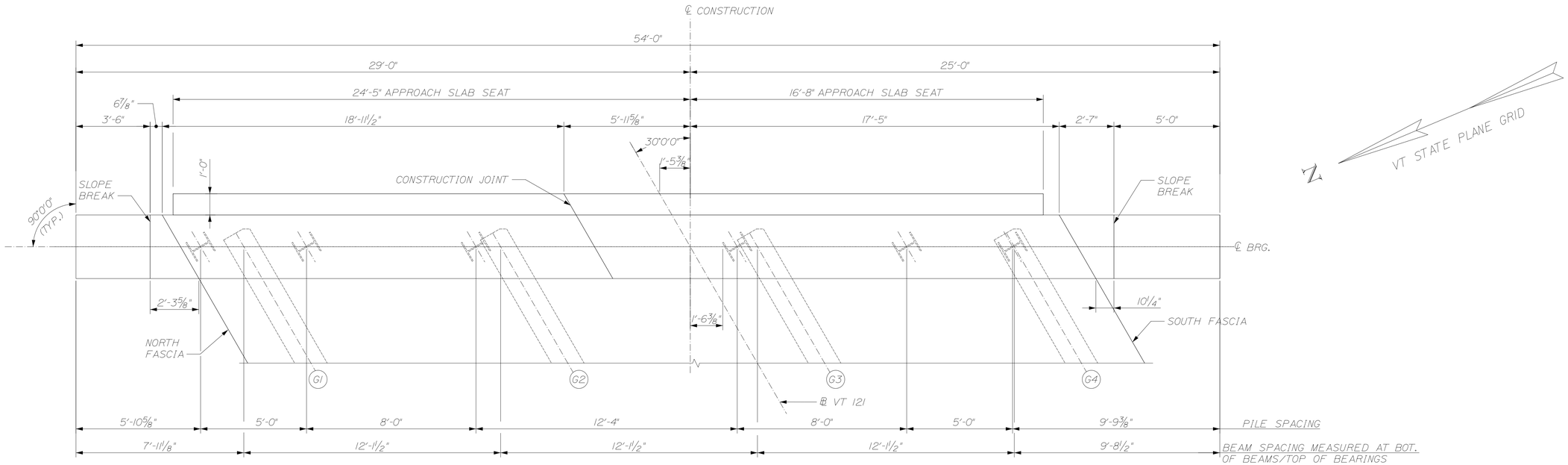

ABUTMENT #2 PLAN

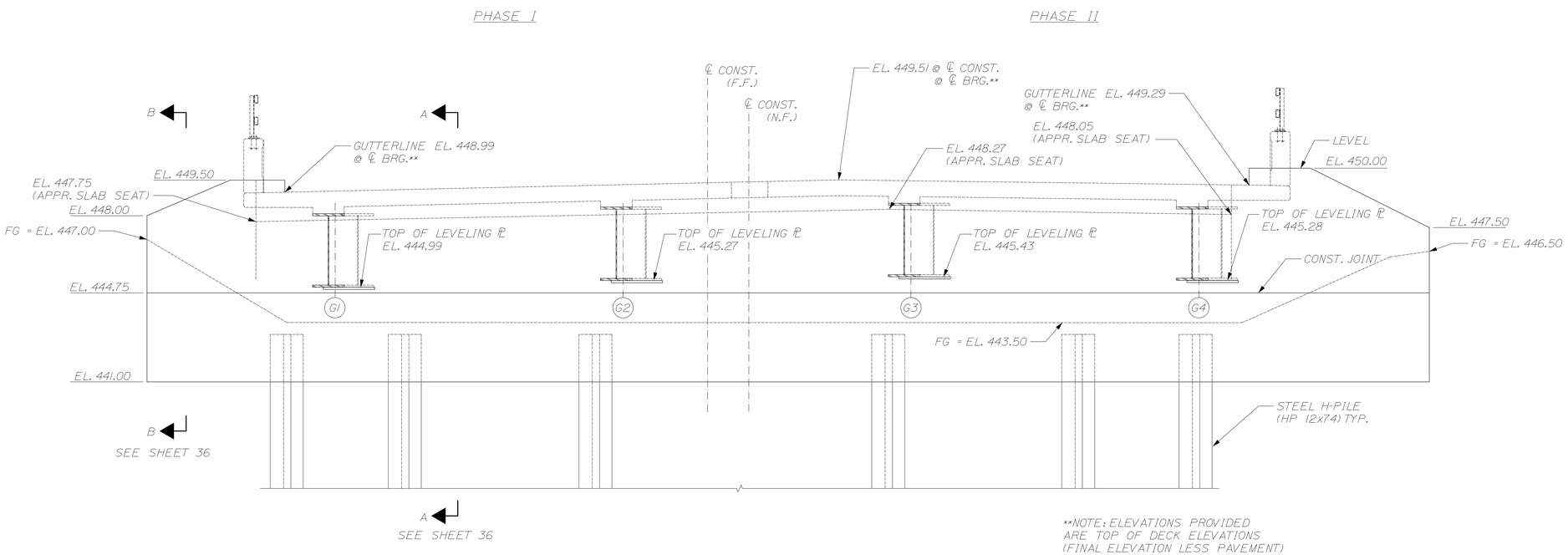

**NOTE: ELEVATIONS PROVIDED ARE TOP OF DECK ELEVATIONS (FINAL ELEVATION LESS PAVEMENT)

ABUTMENT #2 ELEVATION

3/8"=1'-0"

NOTE: FRONT FACE OF DECK & RAIL ONLY SHOWN FOR CLARITY

CALDERWOOD ENGINEERING, ETC.
STRUCTURAL ENGINEERING • DETAILING SERVICES
222 RIVER RD, RICHMOND, ME 04357 PH/FX (207) 737-2007/(207) 737-2008

PREPARED FOR:
COLD RIVER BRIDGES, LLC

CEE 106-BR-14

	BY	DATE
DESIGN-DETAILED	ETC	2014
CHECKED-REVIEWED		
REVISIONS 1		
REVISIONS 2		
REVISIONS 3		
REVISIONS 4		
FIELD CHANGES		

P.E. NUMBER

DATE:

VE SUPER. DESIGN
ROCKINGHAM VT. BRF 0126 (12)

ABUTMENT 2 MASONRY

SHEET NUMBER

34

CALDERWOOD ENGINEERING
222 RIVER ROAD
RICHMOND, ME 04357
PH. (207) 737-2007 FAX (207) 737-2008

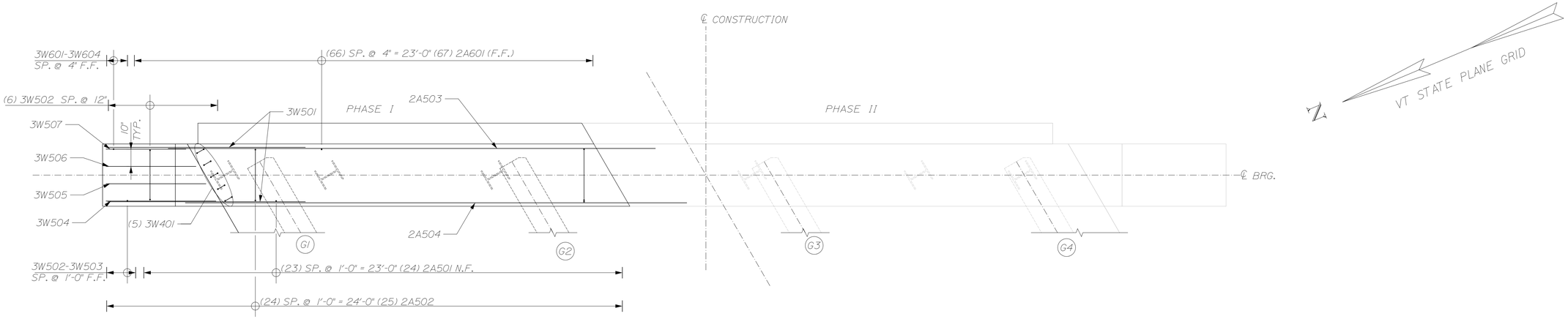

ABUTMENT #2 PLAN ~ PHASE I REINFORCEMENT

3/8"=1'-0"

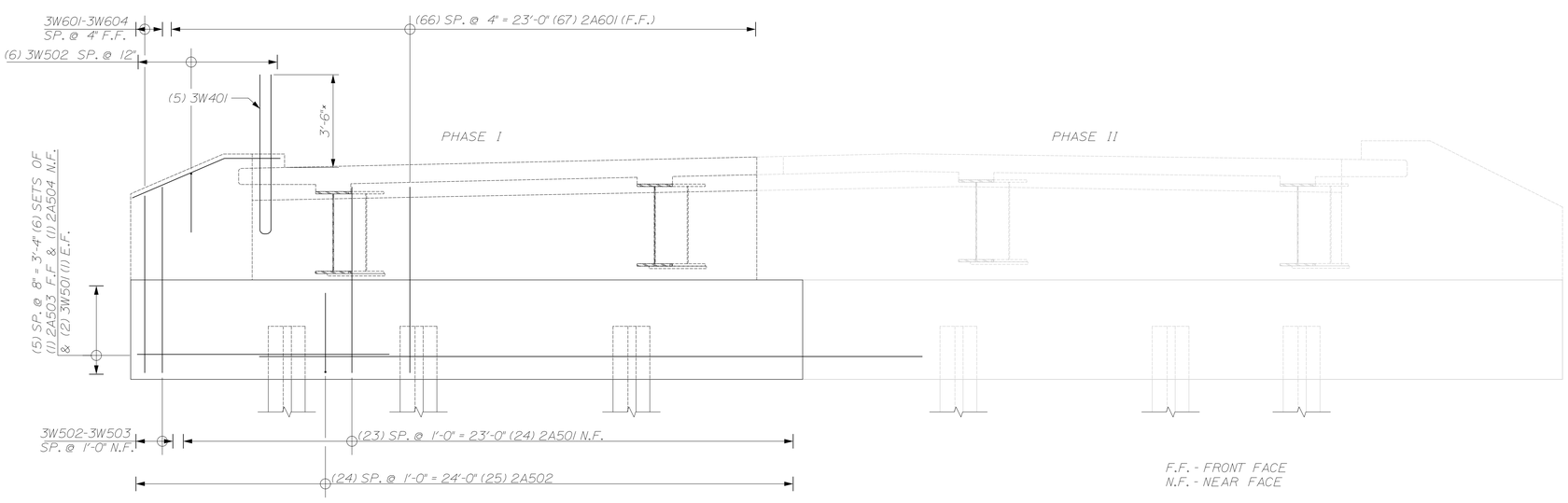

ABUTMENT #2 ELEVATION ~ PHASE I REINFORCEMENT

3/8"=1'-0"

* TRIM 3W401 BARS IN FIELD AS NEEDED TO MAINTAIN COVER TO TOP OF CONCRETE BRIDGE RAILING END POST

CALDERWOOD ENGINEERING, ETC.
STRUCTURAL ENGINEERING • DETAILING SERVICES
222 RIVER RD, RICHMOND, ME 04357 PH/FX (207) 737-2007/(207) 737-2008

PREPARED FOR:
COLD RIVER BRIDGES, LLC

CEE 106-BR-14

P.E. NUMBER

DATE:

	BY	DATE
DESIGN-DETAILED	ETC	2014
CHECKED-REVIEWED		
REVISIONS 1		
REVISIONS 2		
REVISIONS 3		
REVISIONS 4		
FIELD CHANGES		

VE SUPER. DESIGN
ROCKINGHAM VT. BRF 0126 (12)

ABUTMENT 2 PHASE I REINFORCEMENT

SHEET NUMBER

35

CALDERWOOD ENGINEERING
222 RIVER ROAD
RICHMOND, ME 04357
PH. (207) 737-2007 FAX (207) 737-2008

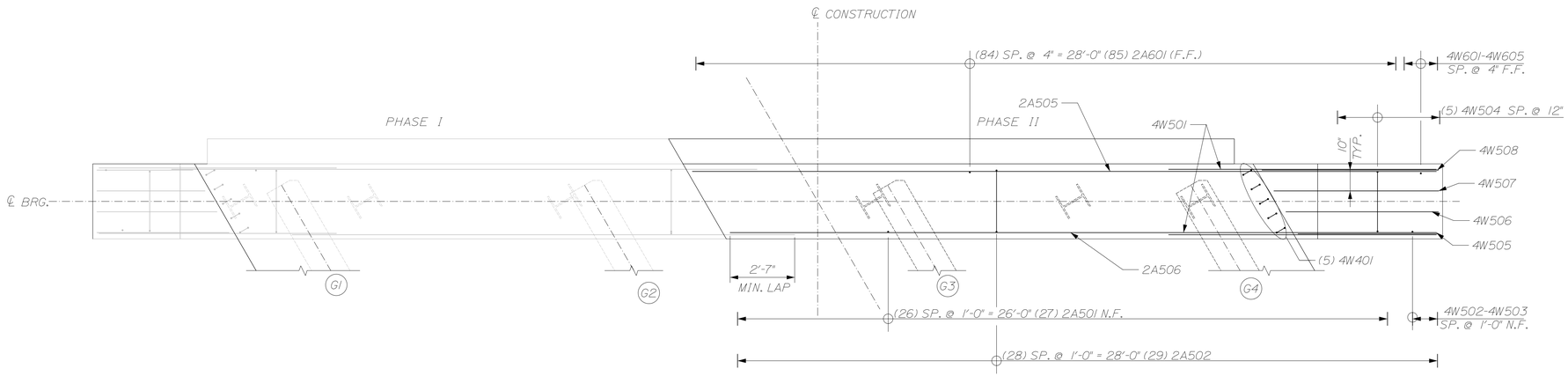

ABUTMENT #2 PLAN ~ PHASE II REINFORCEMENT

3/8"=1'-0"

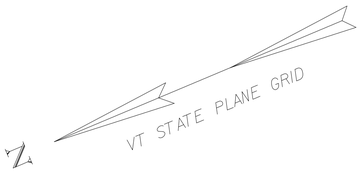

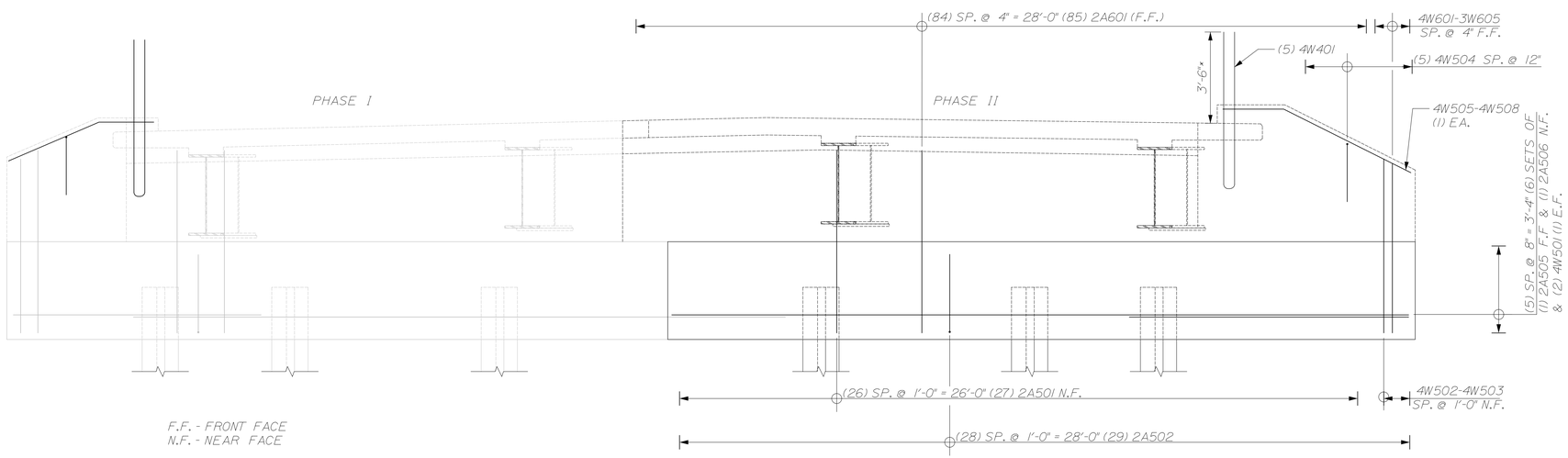

F.F. - FRONT FACE
N.F. - NEAR FACE

ABUTMENT #2 ELEVATION ~ PHASE II REINFORCEMENT

3/8"=1'-0"

CALDERWOOD ENGINEERING, ETC.
STRUCTURAL ENGINEERING • DETAILING SERVICES
222 RIVER RD, RICHMOND, ME 04357 PH/FX (207)737-2007/(207) 737-2008

PREPARED FOR:
COLD RIVER BRIDGES, LLC

CEE 106-BR-14

P.E. NUMBER

DATE:

	BY	DATE
DESIGN-DETAILED	ETC	2014
CHECKED-REVIEWED		
REVISIONS 1		
REVISIONS 2		
REVISIONS 3		
REVISIONS 4		
FIELD CHANGES		

VE SUPER. DESIGN
ROCKINGHAM VT. BRF 0126 (12)

ABUTMENT 2 PHASE 2 REINFORCEMENT

SHEET NUMBER

35a

CALDERWOOD ENGINEERING
222 RIVER ROAD
RICHMOND, ME 04357
PH. (207) 737-2007 FAX (207) 737-2008

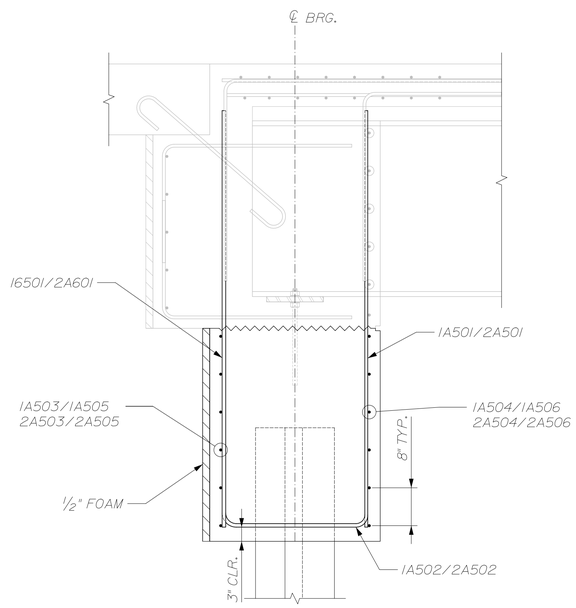

ABUTMENT REINFORCING SECTION
3/4" = 1'-0"

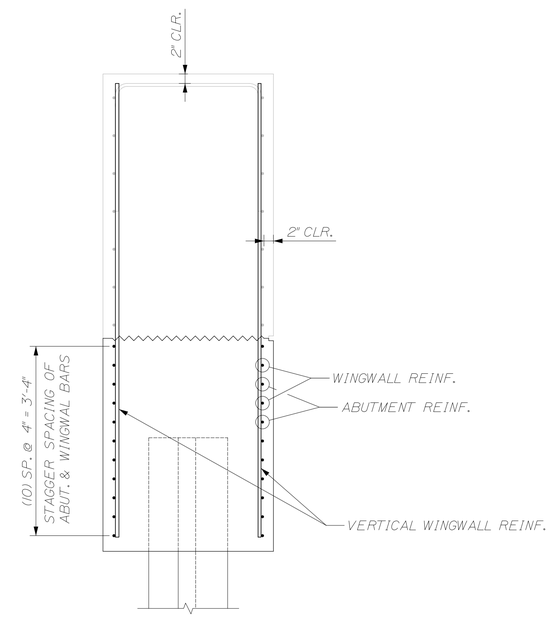

WINGWALL REINFORCING SECTION
3/4" = 1'-0"

CALDERWOOD ENGINEERING, ETC.
STRUCTURAL ENGINEERING • DETAILING SERVICES
222 RIVER RD, RICHMOND, ME 04357 PH/FX (207) 737-2007/(207) 737-2008

PREPARED FOR:
COLD RIVER BRIDGES, LLC

CEE 106-BR-14

P.E. NUMBER

DATE:

	BY	DATE
DESIGN-DETAILED	ETC	2014
CHECKED-REVIEWED		
REVISIONS 1		
REVISIONS 2		
REVISIONS 3		
REVISIONS 4		
FIELD CHANGES		

VE SUPER. DESIGN
ROCKINGHAM VT. BRF 0126 (12)

ABUTMENT SECTIONS

SHEET NUMBER

36

CALDERWOOD ENGINEERING
222 RIVER ROAD
RICHMOND, ME 04357
PH. (207) 737-2007 FAX (207) 737-2008

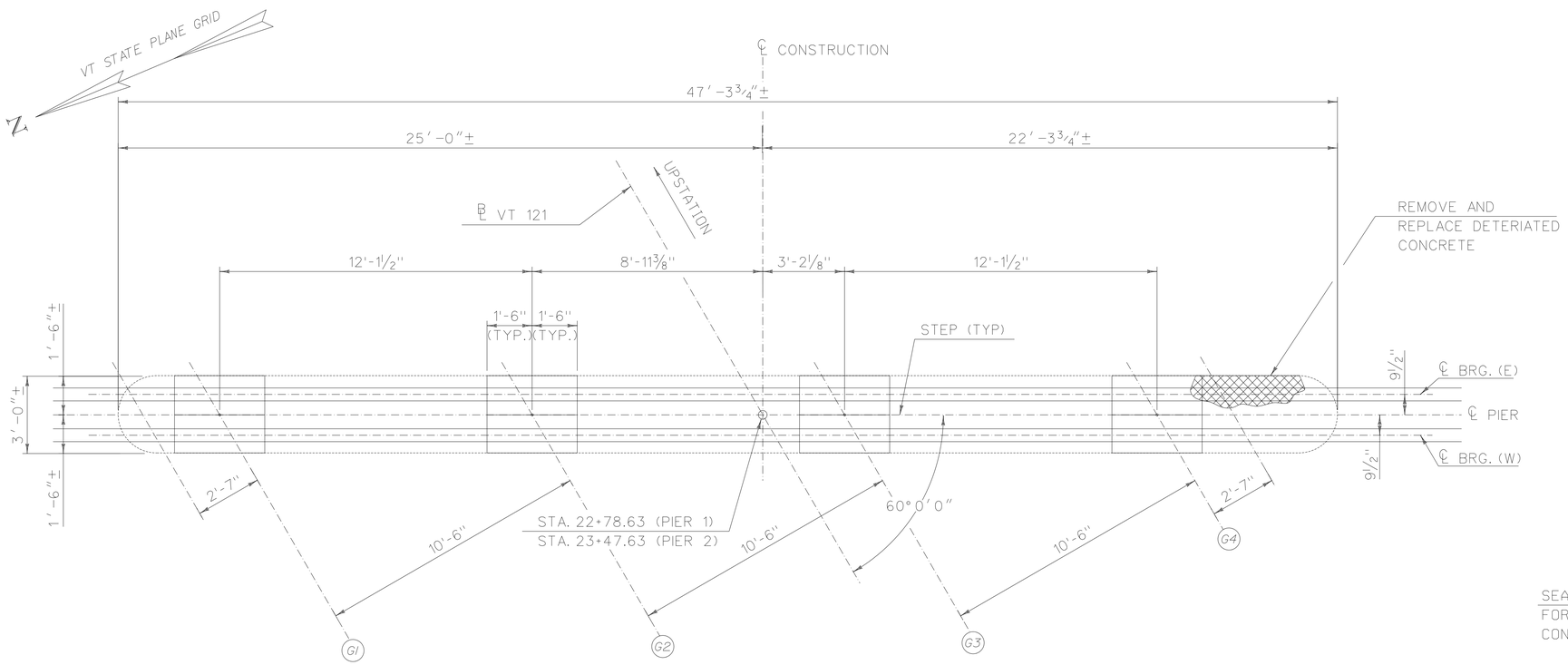

PIERS 1 AND 2 - PLAN

SCALE ⅜" = 1'-0"

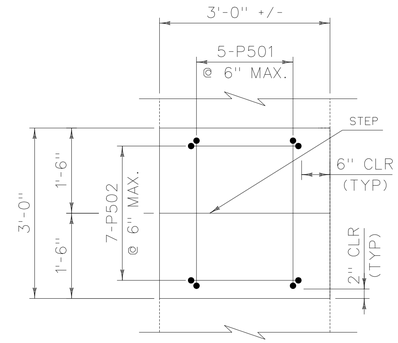

PEDESTAL REINFORCEMENT PLAN

SCALE ¾" = 1'-0"

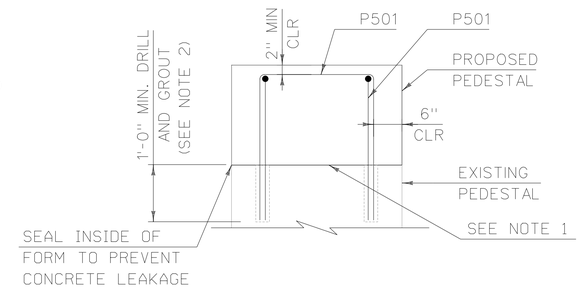

PEDESTAL REINFORCEMENT ELEVATION

SCALE ¾" = 1'-0"

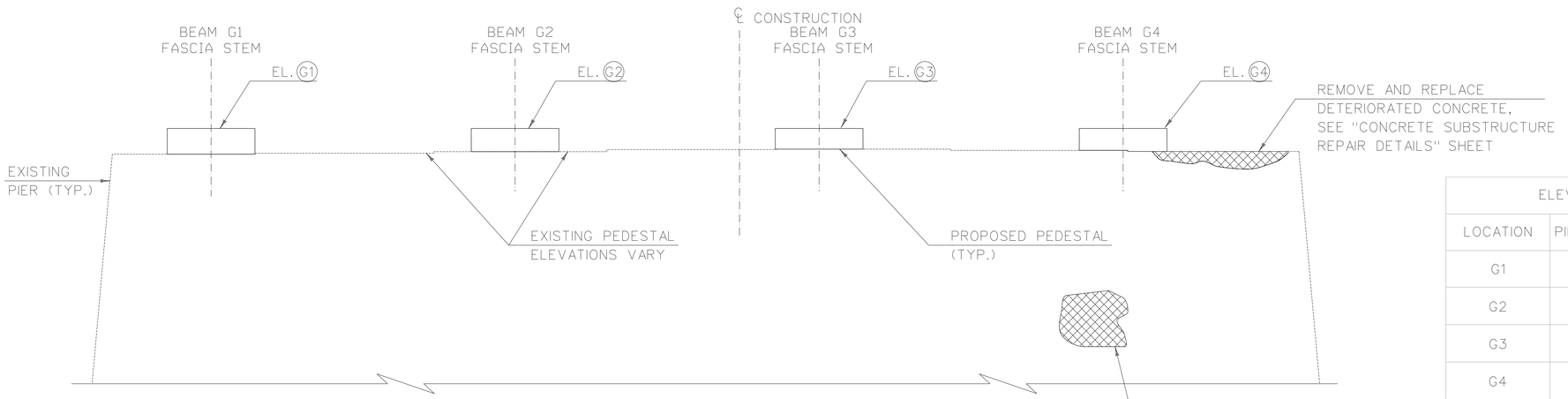

PIERS 1 AND 2 - PARTIAL ELEVATION

SCALE ⅜" = 1'-0"

ELEVATION TABLE

LOCATION	PIER 1 WEST	PIER 2 WEST
G1	446.15	445.46
G2	446.42	445.73
G3	446.58	445.89
G4	446.43	445.74
EXISTING PEDESTAL ELEVATIONS VARY	446.0± TO 446.3±	445.2± TO 445.5±

NOTES:

1. FOR A PERIOD OF AT LEAST ONE HOUR BEFORE THE PLACEMENT OF PEDESTAL CONCRETE MATERIAL, THE PREPARED SURFACE SHALL BE FLOODED WITH WATER. AFTER REMOVAL OF ALL FREE WATER, THE PEDESTAL CONCRETE MATERIAL SHALL BE DEPOSITED ON THE DAMPENED SURFACE.
2. DIAMETER OF DRILLED HOLE SHALL BE DETERMINED BY THE CONTRACTOR AND APPROVED BY THE ENGINEER.

CALDERWOOD ENGINEERING, ETC.
STRUCTURAL ENGINEERING • DETAILING SERVICES
222 RIVER RD, RICHMOND, ME 04357 PH/FX (207)737-2007/(207) 737-2008

PREPARED FOR:
COLD RIVER BRIDGES, LLC

CEE 106-BR-14

P.E. NUMBER

DATE:

	BY	DATE
DESIGN-DETAILED	ETC	2014
CHECKED-REVIEWED		
REVISIONS 1		
REVISIONS 2		
REVISIONS 3		
REVISIONS 4		
FIELD CHANGES		

VE SUPER. DESIGN
ROCKINGHAM VT. BRF 0126 (12)

PIER MODIFICATION

SHEET NUMBER

37

CALDERWOOD ENGINEERING
222 RIVER ROAD
RICHMOND, ME 04357
PH. (207) 737-2007 FAX (207) 737-2008

EXISTING SUBSTRUCTURE CONCRETE REPAIR NOTES:

1. WHEN "OVERHEAD AND VERTICAL CONCRETE REPAIR MATERIAL" CONFORMING TO SUBSECTION 780.02 IS USED, THE BONDING AGENT, (IF ANY REQUIRED) AND ITS APPLICATION PROCEDURE SHALL COMPLY WITH THE REQUIREMENTS OF THE PATCHING MATERIAL MANUFACTURER. PAYMENT FOR BONDING AGENT WILL BE INCIDENTAL TO ITEM 580.13, 580.14 OR 580.15.
2. ALL WORK AND MATERIALS NECESSARY FOR PREPARING A PATCH AND FILLING IT SHALL BE INCLUDED IN THE UNIT PRICE BID FOR ITEM 580.13, 580.14 OR 580.15
3. ITEM 580.14 FILLING MATERIAL SHALL BE "RAPID SETTING CONCRETE REPAIR MATERIAL" CONFORMING TO SUBSECTION 780.03.
4. ITEM 580.15 FILLING MATERIAL SHALL BE "RAPID SETTING CONCRETE REPAIR MATERIAL WITH COARSE AGGREGATE" CONFORMING TO SUBSECTION 780.04.
5. IF PNEUMATICALLY APPLIED CONCRETE IS SELECTED FOR REPAIR OF CONCRETE SUBSTRUCTURE SURFACE, CLASS II OR III, THEN THIS TYPE OF CONCRETE REPAIR SHALL BE CONFINED ONLY TO VERTICAL AND OVERHEAD SURFACES OF THE SUBSTRUCTURE. ALSO, THE BRIDGE AND BEAMS SHOULD BE COMPLETELY PROTECTED FROM REBOUND MATERIAL DURING PNEUMATICALLY APPLIED CONCRETE APPLICATION PROCEDURES.
6. THE ENGINEER SHALL ORDER REPLACEMENT OF ANY SUBSTRUCTURE REINFORCING STEEL THAT IS DETERIORATED (WITH MORE THAN 25% SECTION LOSS) WITH NEW REINFORCING STEEL OF THE SAME SIZE. ALL REINFORCING STEEL SHALL HAVE AN APPROPRIATE LAP SPLICE. SUBSTRUCTURE REINFORCING STEEL REPLACED WILL BE PLAIN BAR REINFORCING STEEL, LEVEL I OR BETTER AND WILL BE INCIDENTAL TO ITEM 580.14 "REPAIR OF CONCRETE SUBSTRUCTURE SURFACE CLASS II" OR ITEM 580.15 "REPAIR OF CONCRETE SUBSTRUCTURE SURFACE CLASS III".

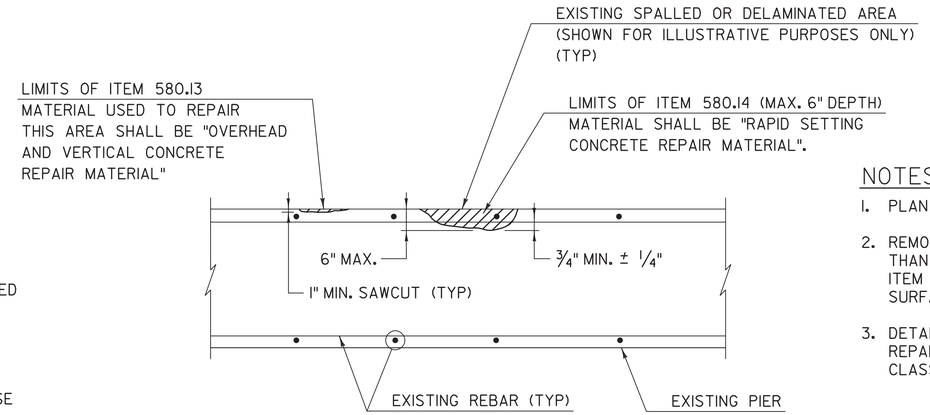

NOTES:

1. PLAN VIEW OF EXISTING PIER SHOWN.
2. REMOVAL OF EXISTING CONCRETE TO A DEPTH GREATER THAN SPECIFIED FOR ITEM 580.14 SHALL BE PAID UNDER ITEM 580.15, "REPAIR OF CONCRETE SUBSTRUCTURE SURFACE, CLASS III".
3. DETAIL SHOWS LIMIT OF ITEMS 580.13, 580.14 AND 580.15 REPAIR OF CONCRETE SUBSTRUCTURE SURFACE, CLASS I, CLASS II, OR CLASS III.

CONCRETE SUBSTUCTURE REPAIR DETAIL

NOT TO SCALE

PROJECT NAME:	ROCKINGHAM
PROJECT NUMBER:	BRF 0126(12)

T·Y·LIN INTERNATIONAL

FILE NAME: z10J072bdr_repair.dgn	PLOT DATE: 7/28/2014
PROJECT LEADER: R. HEBERT	DRAWN BY: D. AXTELL
DESIGNED BY: S. KELLER	CHECKED BY: T. POULIN
CONCRETE SUBSTRUCTURE REPAIR DETAILS	SHEET 38 OF 69

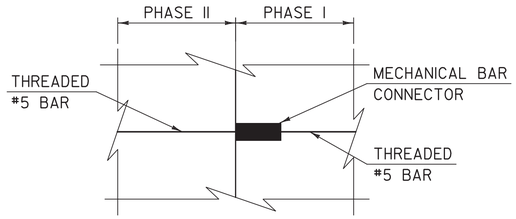

TYPICAL MECHANICAL CONNECTOR DETAIL

SCALE: 1½" = 1'-0"

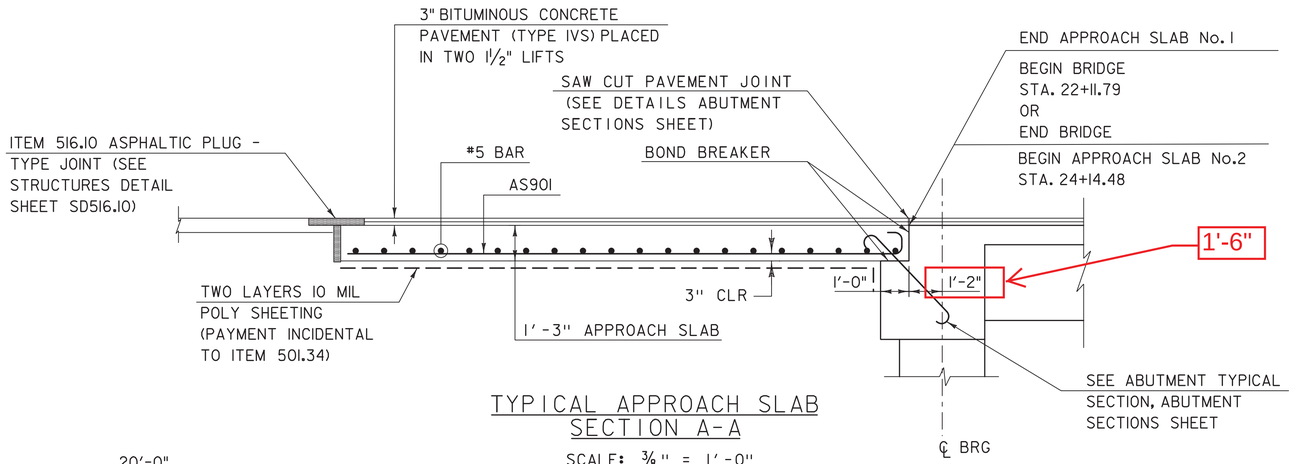

TYPICAL APPROACH SLAB SECTION A-A

SCALE: ⅜" = 1'-0"

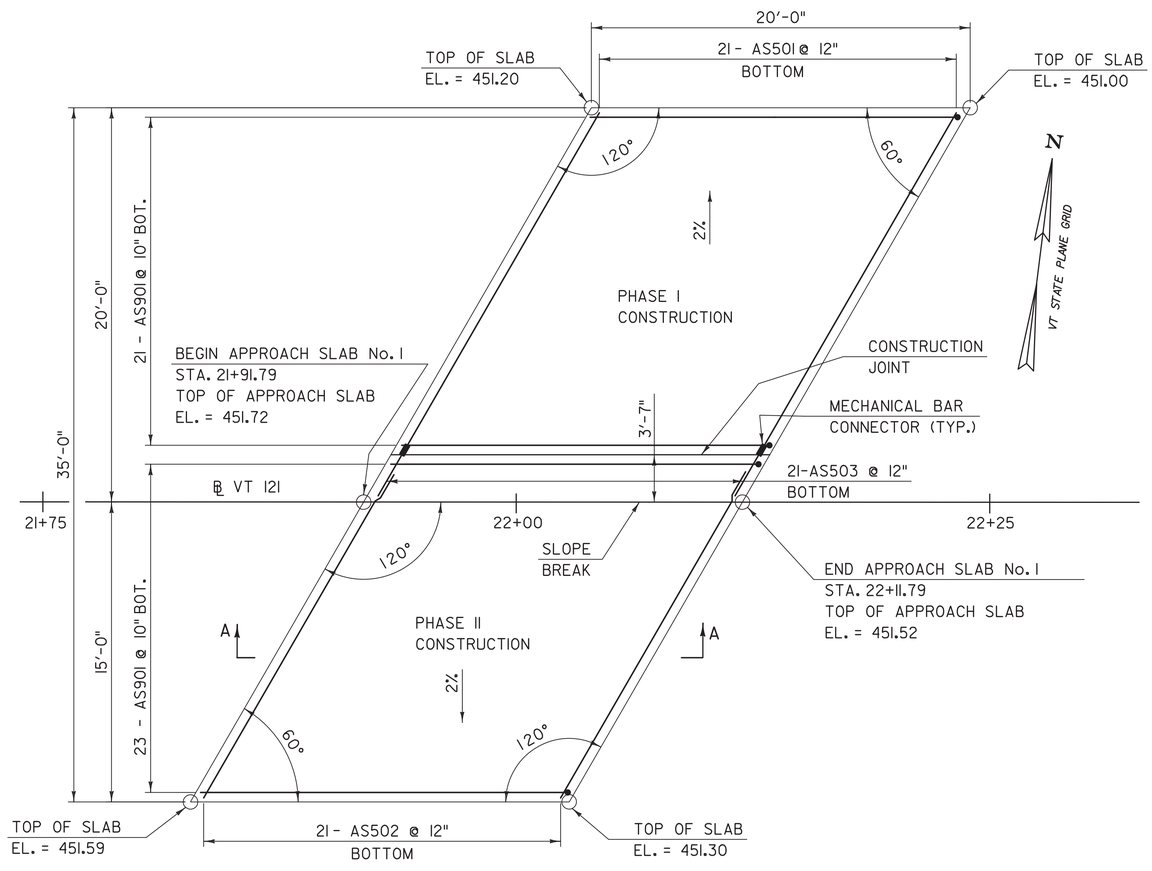

APPROACH SLAB No. 1 PLAN

SCALE: ¼" = 1'-0"

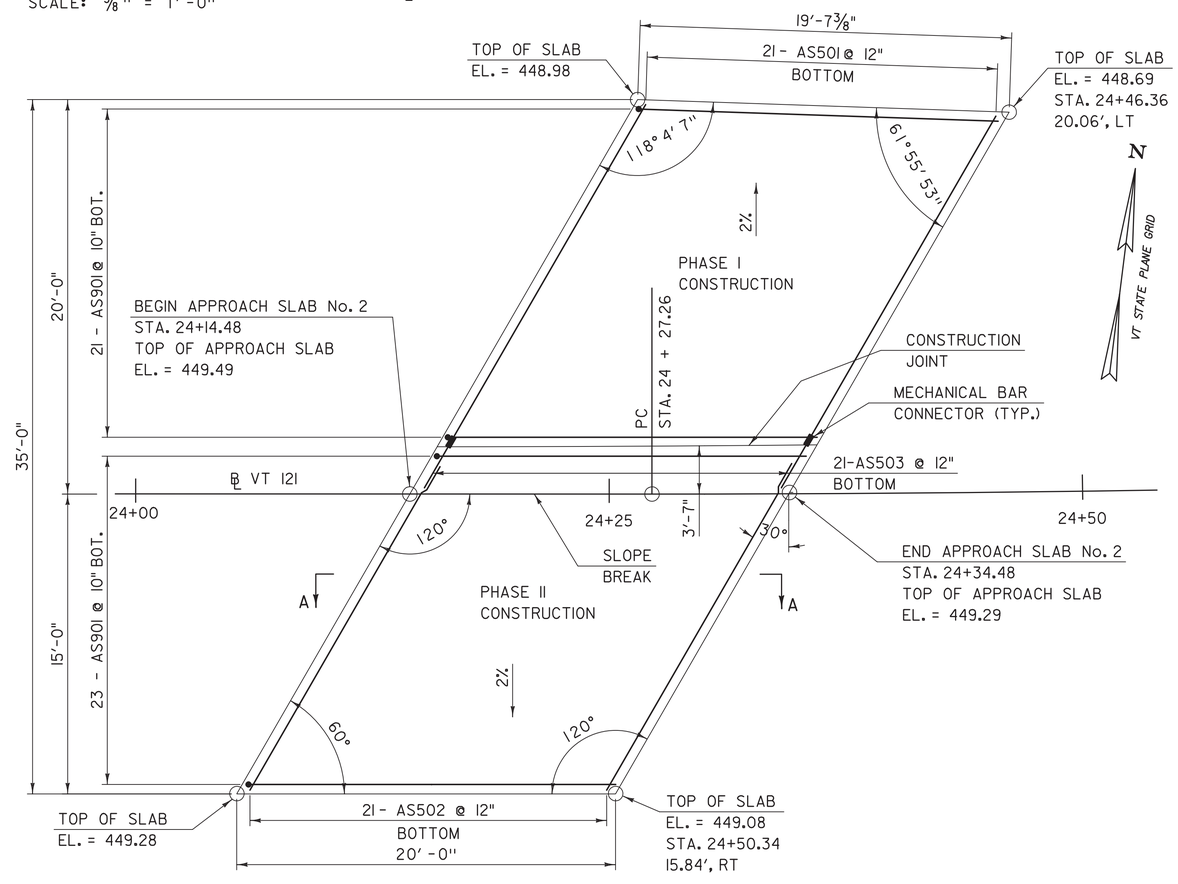

APPROACH SLAB No. 2 PLAN

SCALE: ¼" = 1'-0"

PROJECT NAME:	ROCKINGHAM
PROJECT NUMBER:	BRF 0126(12)

T·Y·LIN INTERNATIONAL

FILE NAME: z10J072bdr_apprslab.dgn	PLOT DATE: 7/28/2014
PROJECT LEADER: R. HEBERT	DRAWN BY: D. AXTELL
DESIGNED BY: S. KELLER	CHECKED BY: T. POULIN
APPROACH SLAB DETAILS	SHEET 39 OF 69

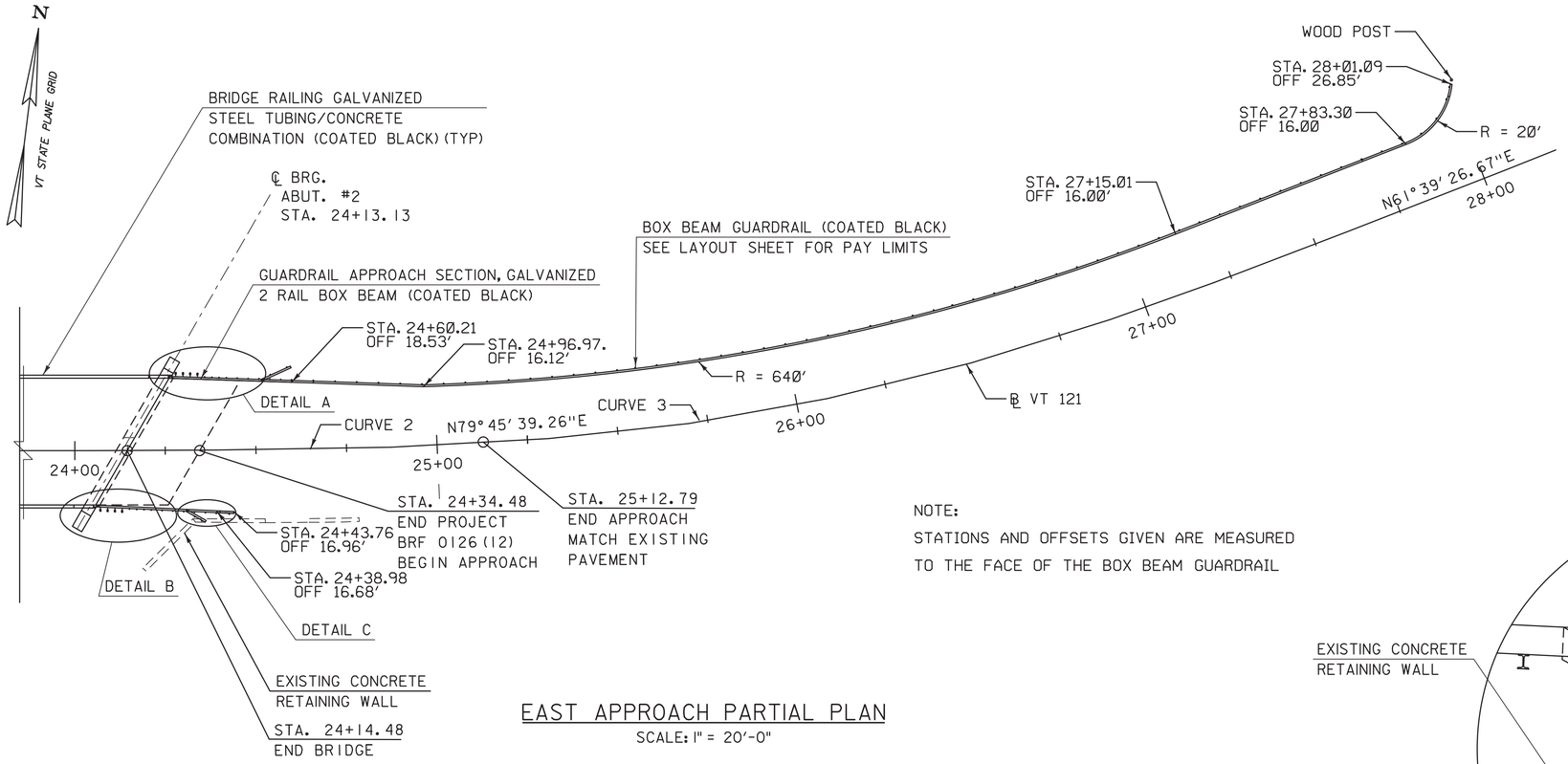

EAST APPROACH PARTIAL PLAN

SCALE: 1" = 20'-0"

NOTE:

STATIONS AND OFFSETS GIVEN ARE MEASURED TO THE FACE OF THE BOX BEAM GUARDRAIL

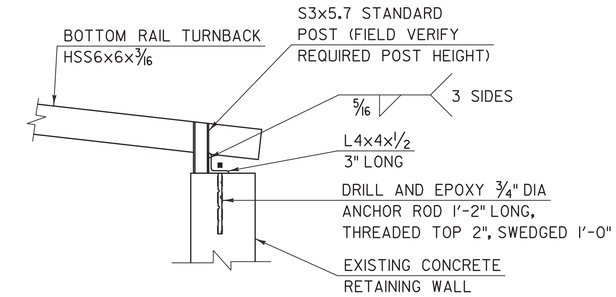

POST ANCHOR DETAIL

N.T.S.

NOTE: PAYMENT FOR POST ANCHOR SHALL BE INCLUDED IN THE UNIT PRICE BID FOR CONTRACT ITEM 621.72.

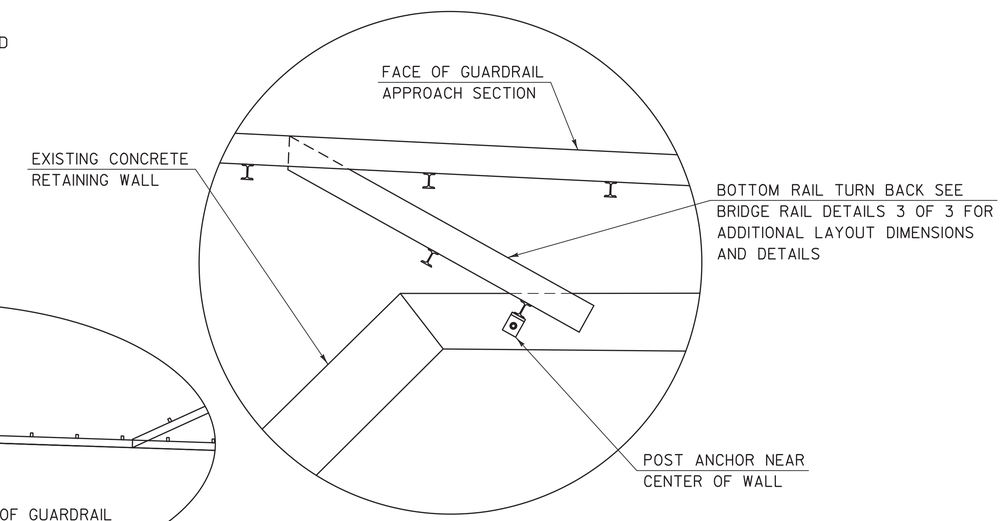

DETAIL C

N.T.S.

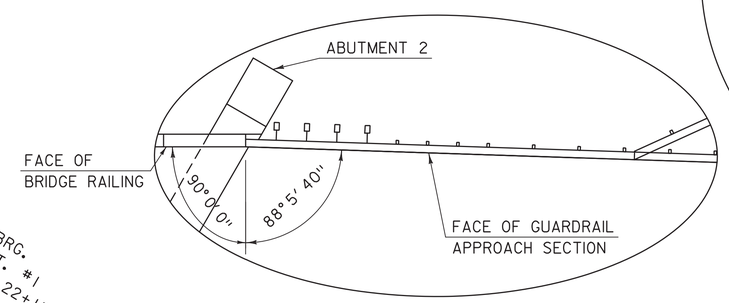

DETAIL A

N.T.S.

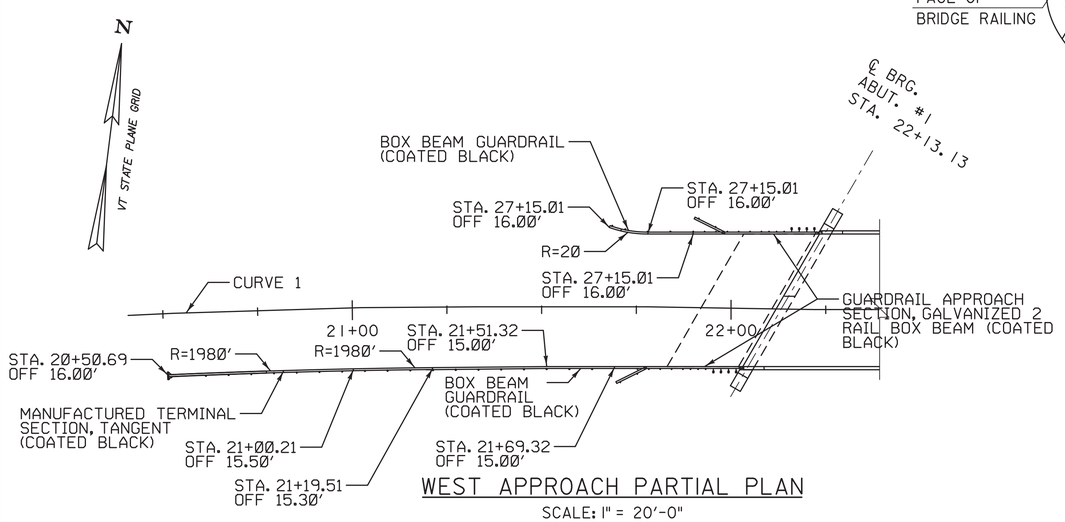

WEST APPROACH PARTIAL PLAN

SCALE: 1" = 20'-0"

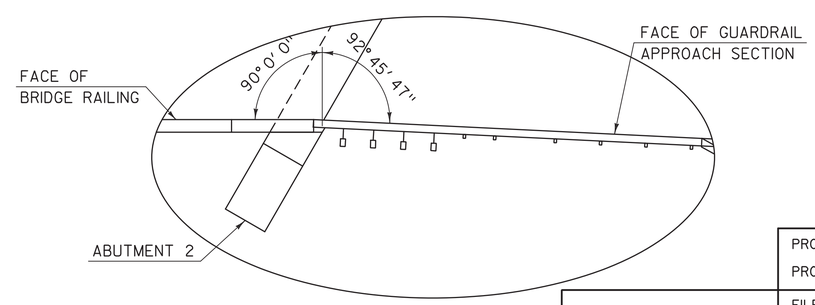

DETAIL B

N.T.S.

PROJECT NAME:	ROCKINGHAM
PROJECT NUMBER:	BRF 0126(12)

T·Y·LIN INTERNATIONAL

FILE NAME: z10J072bdr_rail_pln.dgn
PROJECT LEADER: R. HEBERT
DESIGNED BY: S. KELLER
GUARDRAIL APPROACH AND GUARDRAIL LAYOUT DETAILS

PLOT DATE: 7/28/2014
DRAWN BY: S. KELLER
CHECKED BY: D. BURHANS
SHEET 40 OF 69

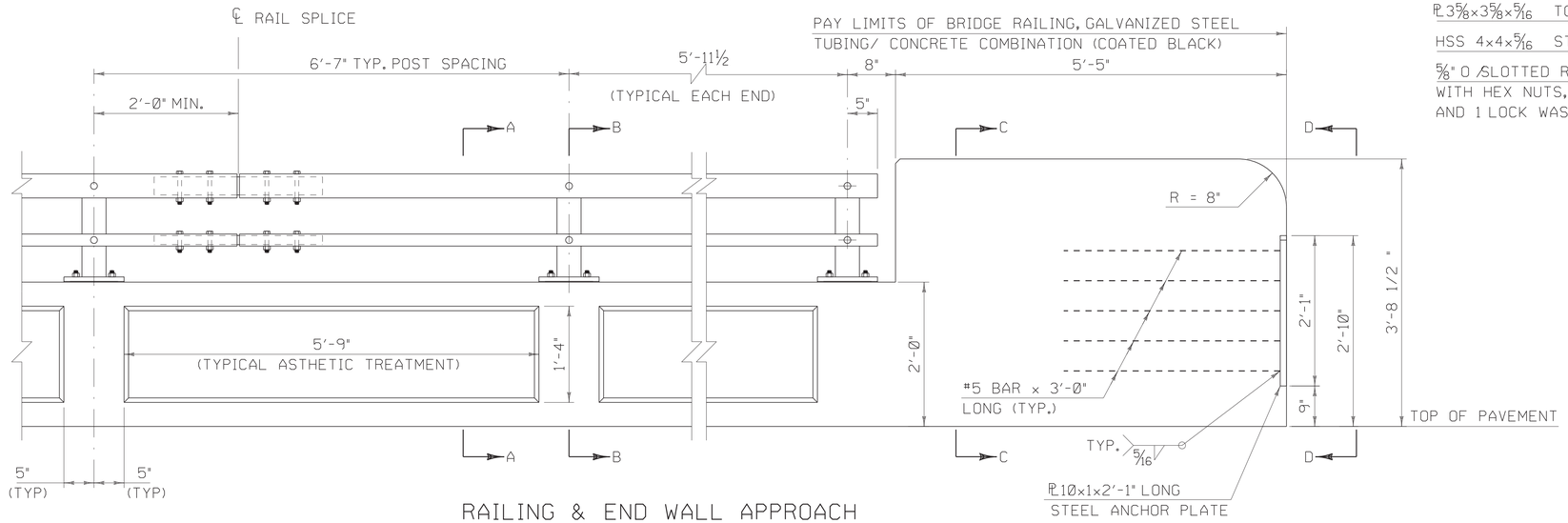

RAILING & END WALL APPROACH

SCALE 1"=1'-0"

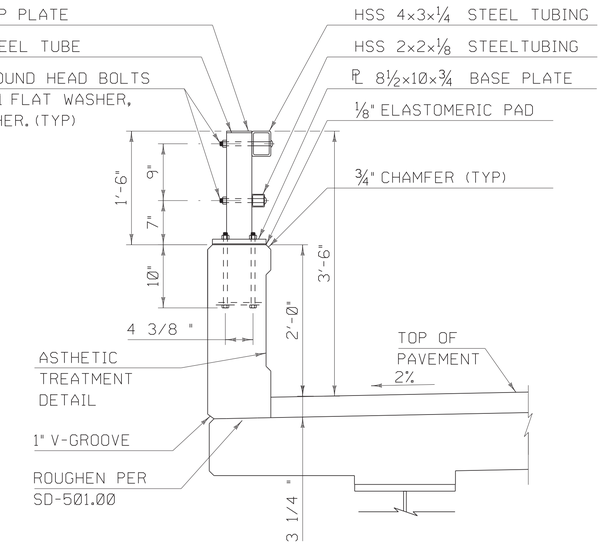

RAIL TYPICAL SECTION

SCALE 1"=1'-0"

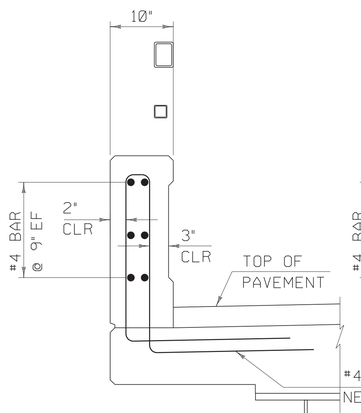

SECTION A-A

SCALE 1"=1'-0"

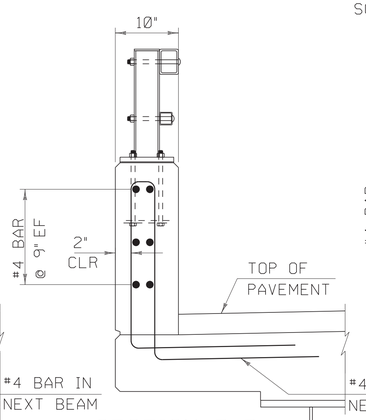

SECTION B-B

SCALE 1"=1'-0"

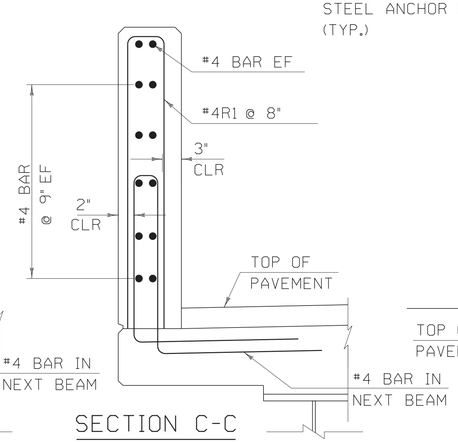

SECTION C-C

SCALE 1"=1'-0"

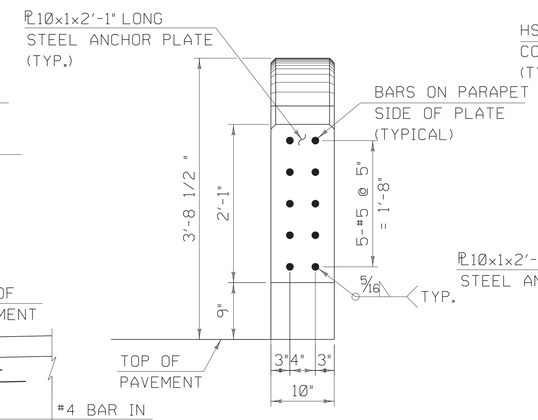

SHOWING EMBEDED REBAR

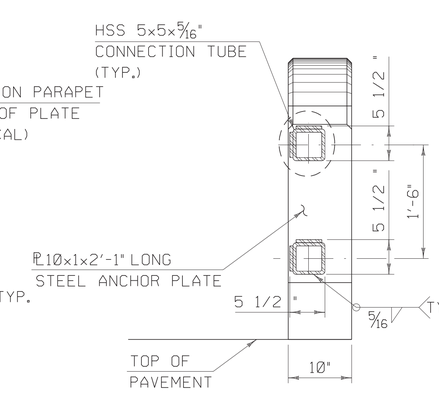

WITH HSS CONNECTOR TUBE

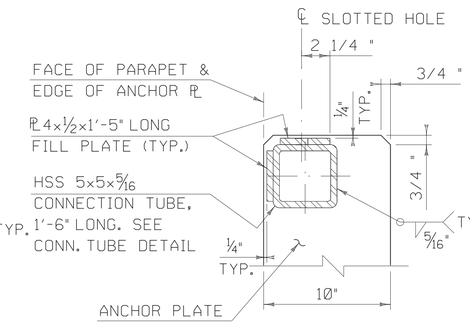

DETAIL "B"

NTS

NOTES:

1. BRIDGE RAIL SHALL HAVE A RUBBED FINISH IN ACCORDANCE WITH SECTION 501.
2. HOLES AND RECESSES ARE TO BE FORMED OR CORED, PERCUSSION DRILLING IS NOT ALLOWED.
3. ALL STEEL COMPONENTS SHALL BE COATED BLACK IN ACCORDANCE WITH ASTM D7803 FOLLOWING GALVANIZING.
4. ALL REINFORCEMENT SHALL BE LEVEL II.
5. ALL LONGITUDINAL BARS SHALL HAVE A MINIMUM LAP LENGTH OF 2'-1".
6. ALL WORK AND MATERIALS SHALL CONFORM TO SECTION 525.
7. PRIOR TO GALVANIZING THE ASSEMBLED POST, GRIND ALL EDGES TO A MINIMUM RADIUS OF 1/16".
8. ALL POSTS SHALL BE SET NORMAL TO GRADE.
9. SECTIONS OF RAIL TUBE SHALL BE ATTACHED TO A MINIMUM OF TWO BRIDGE POSTS AND PREFERABLY TO AT LEAST 4 POSTS.
10. HOLES IN RAILS FOR TUBE ATTACHMENT MAY BE FIELD-DRILLED. HOLES SHALL BE COATED WITH AN APPROVED ZINC-RICH PAINT PRIOR TO INSTALLATION.
11. BOLTS SHALL BE TORQUED SNUG TIGHT (APPROXIMATELY 100 FT-LB).
12. RAIL TUBES SHALL BE ATTACHED USING ⅝" FULL DIAMETER BODY ASTM A 449 (TYPE 1) ROUND HEAD BOLTS INSERTED THROUGH THE FACE OF THE TUBE.
13. SEE STANDARD DRAWING G-1 FOR DETAILS OF DELINEATORS. A DELINEATOR SHALL BE INSTALLED AT 30 FOOT SPACING OR THE NEAREST POST. WHITE IS TO BE INSTALLED ON THE DRIVER'S RIGHT. PAYMENT FOR DELINEATORS SHALL BE INCIDENTAL TO OTHER ITEMS.
14. SEE "GUARDRAIL APPROACH AND GUARDRAIL LAYOUT DETAILS" SHEET FOR ADDITIONAL EAST APPROACH CONNECTION TUBE DETAILS.

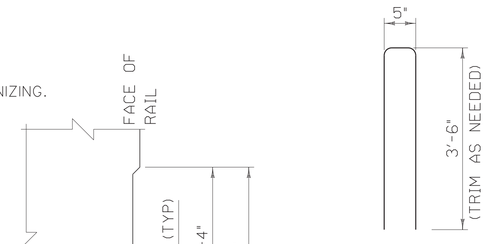

#4R1 BAR DETAIL

(9 EACH END, 36 TOTAL)

VIEW D-D

SCALE 1"=1'-0"

ASTHETIC TREATMENT DETAIL

SCALE 1½"=1'

NOTE:

NF = NEAR FACE
FF = FAR FACE
EF = EACH FACE
2'-2" BAR LAP UNLESS OTHERWISE SPECIFIED ON THE PLANS.

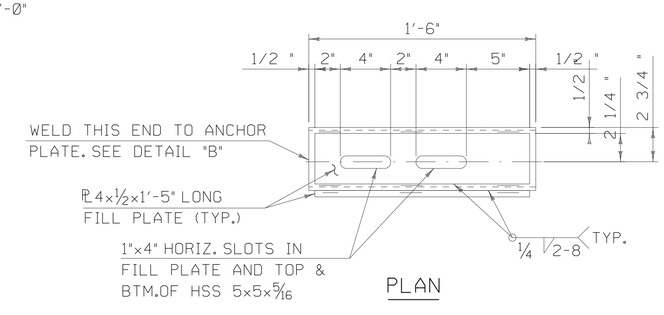

CONNECTION TUBE DETAIL

NTS

CALDERWOOD ENGINEERING, ETC.
STRUCTURAL ENGINEERING • DETAILING SERVICES
222 RIVER RD, RICHMOND, ME 04357 PH/FX (207)737-2007/(207) 737-2008

PREPARED FOR:
COLD RIVER BRIDGES, LLC

CEE 106-BR-14

P.E. NUMBER

DATE:

DESIGN-DETAILED	BY	DATE
CHECKED-REVIEWED	ETC	2014
REVISIONS 1		
REVISIONS 2		
REVISIONS 3		
REVISIONS 4		
FIELD CHANGES		

VE SUPER. DESIGN
ROCKINGHAM VT. BRF 0126 (12)

BRIDGE RAILING DETAILS (1 OF 3)

SHEET NUMBER

41

CALDERWOOD ENGINEERING
222 RIVER ROAD
W. RICHMOND, ME 04357
PH. (207)737-2007 FAX (207)737-2008

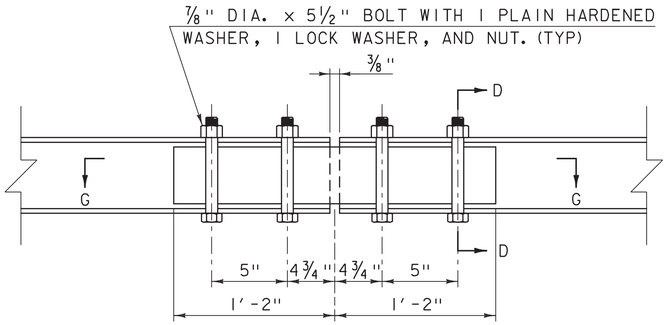

TOP RAIL SPLICE DETAIL

N.T.S.

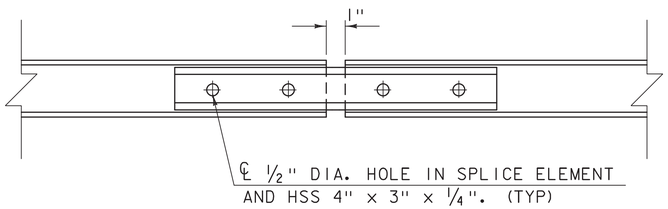

SECTION E-E

N.T.S.

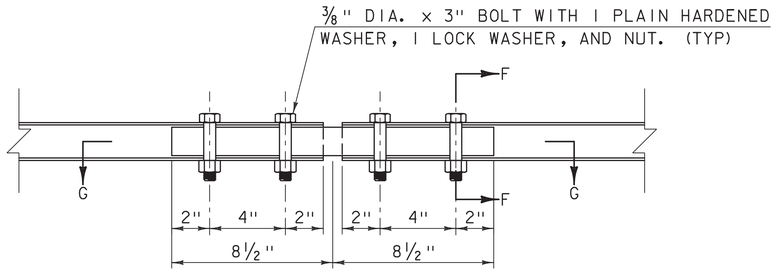

BOTTOM RAIL SPLICE DETAIL

ELEVATION VIEW

N.T.S.

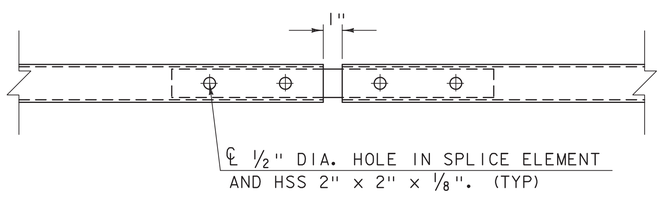

SECTION G-G

N.T.S.

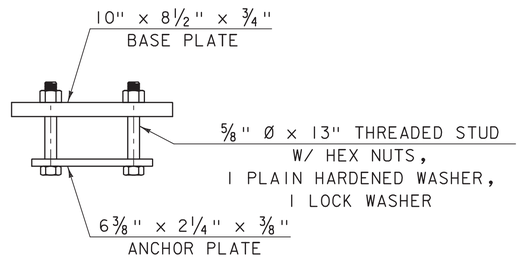

RAIL POST ANCHORAGE

N.T.S.

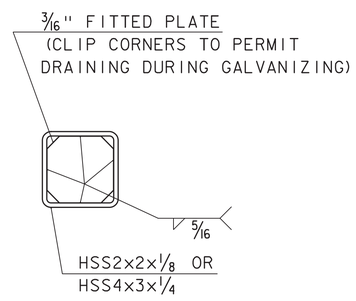

END OF RAIL DETAIL

N.T.S.

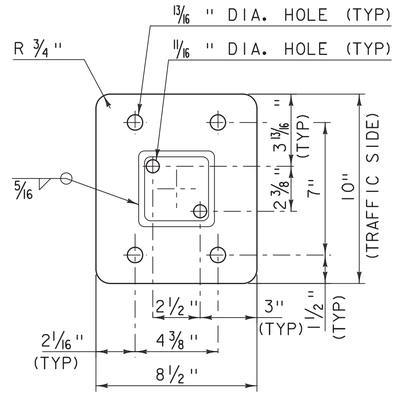

BASE PLATE

N.T.S.

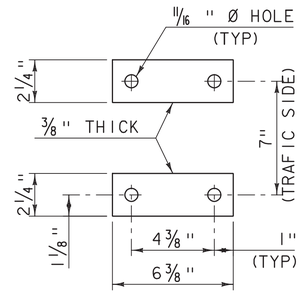

ANCHOR PLATES

N.T.S.

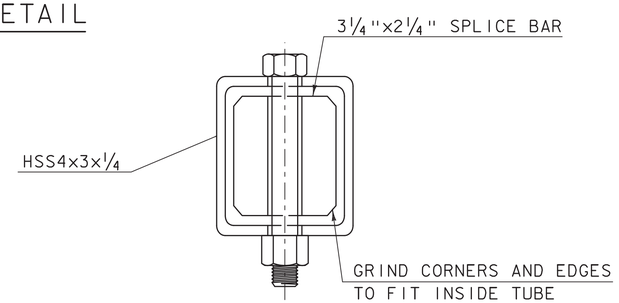

SECTION D-D

N.T.S.

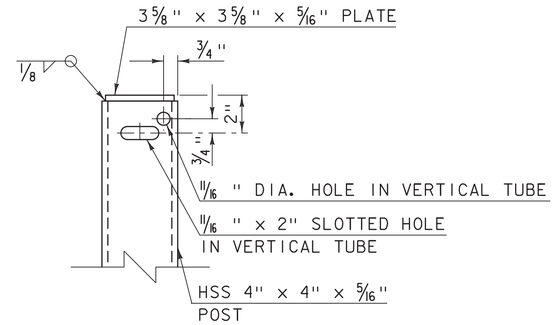

VERTICAL TUBE DETAIL

(FRONT VIEW)

N.T.S.

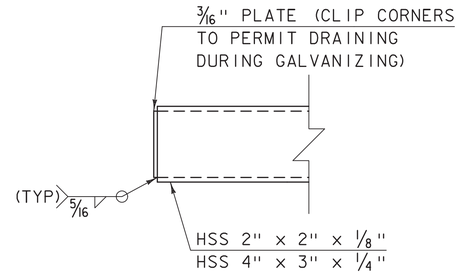

END OF RAIL DETAIL

N.T.S.

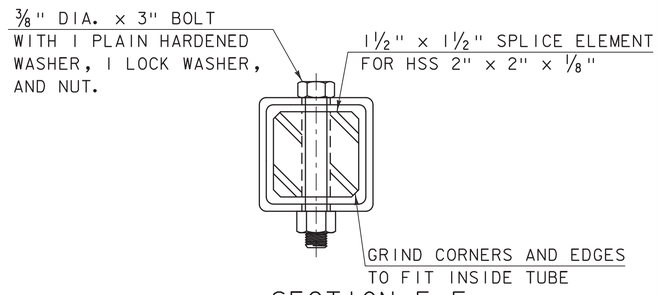

SECTION F-F

N.T.S.

PROJECT NAME: ROCKINGHAM	
PROJECT NUMBER: BRF 0126(12)	
T·Y·LIN INTERNATIONAL	FILE NAME: z10J072bdr_rail_02.dgn
	PROJECT LEADER: R. HEBERT
	DESIGNED BY: S. KELLER
	BRIDGE RAILING DETAILS (2 OF 3)
	PLOT DATE: 7/28/2014
	DRAWN BY: B. CARTER
	CHECKED BY: T.POULIN
	SHEET 42 OF 69

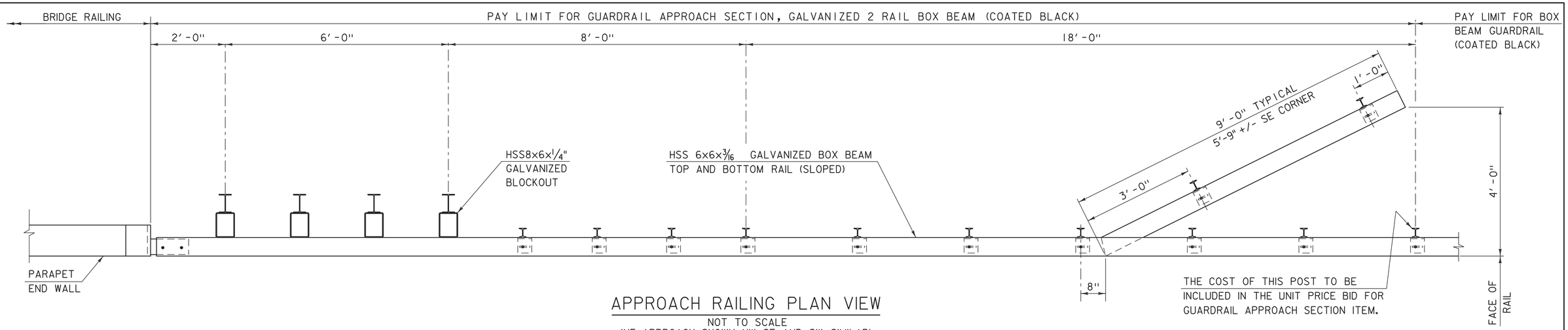

APPROACH RAILING PLAN VIEW

NOT TO SCALE
(NE APPROACH SHOWN, NW, SE, AND SW SIMILAR)

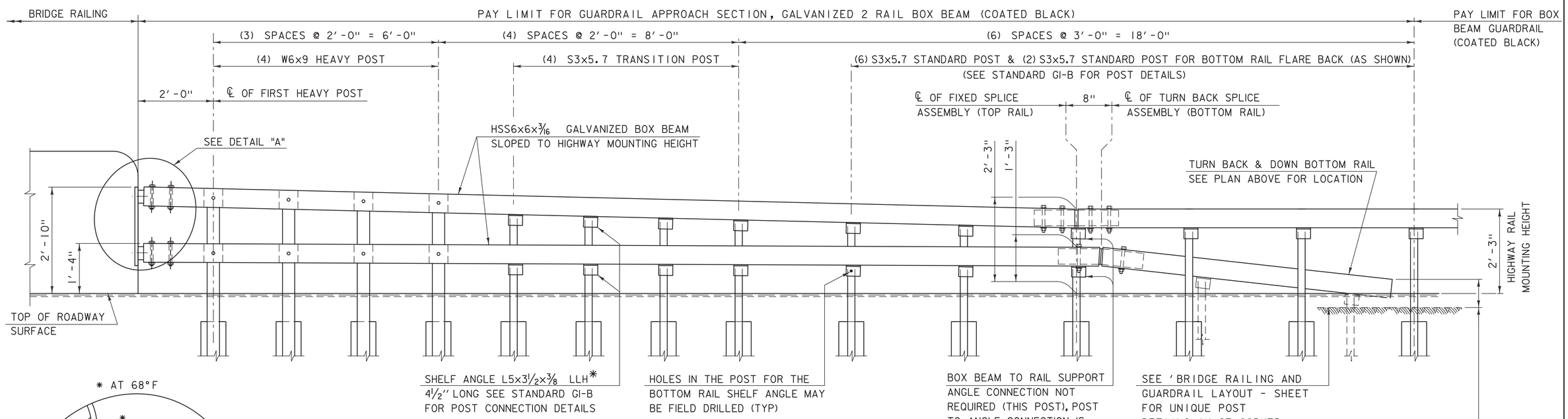

APPROACH RAILING ELEVATION

NOT TO SCALE
* LONG LEG HORIZONTAL

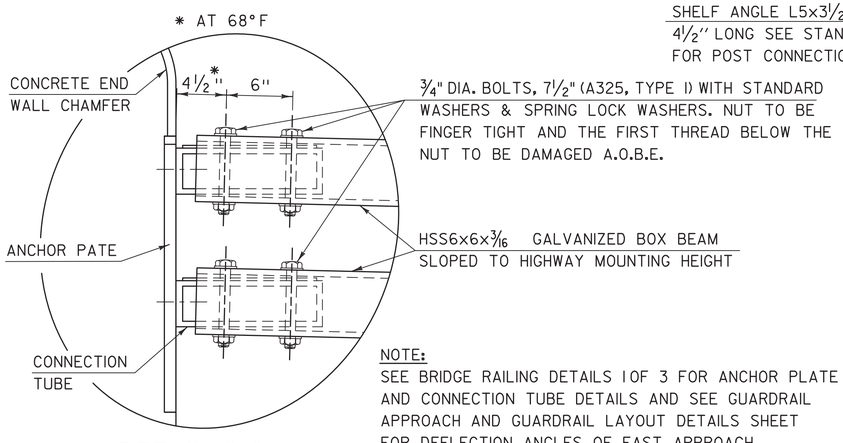

DETAIL "A"

NOT TO SCALE

NOTE:
SEE BRIDGE RAILING DETAILS 1 OF 3 FOR ANCHOR PLATE AND CONNECTION TUBE DETAILS AND SEE GUARDRAIL APPROACH AND GUARDRAIL LAYOUT DETAILS SHEET FOR DEFLECTION ANGLES OF EAST APPROACH.

NOTES:

1. ALL STEEL COMPONENTS SHALL BE COATED BLACK IN ACCORDANCE WITH ASTM D7803 FOLLOWING GALVANIZING.
2. FOR "FIXED SPLICE TUBE", "FIXED SPLICE BAR", "FIXED SPLICE TUBE ASSEMBLY", AND "FIXED SPLICE BAR ASSEMBLY" DETAILS, SEE STANDARD S-364C.
3. FOR "TURN BACK SPLICE TUBE DETAIL" AND "TURN BACK SPLICE TUBE ASSEMBLY" DETAILS, SEE STANDARD S-364D.
4. FOR "HEAVY POST DETAIL" AND "TRANSITION POST DETAIL", SEE STANDARD S-364D.
5. FOR SE CORNER MODIFICATION DETAILS, SEE 'BRIDGE RAILING AND GUARDRAIL LAYOUT' SHEET.
6. SEE "GUARDRAIL APPROACH AND GUARDRAIL LAYOUT DETAILS" SHEET FOR ADDITIONAL EAST APPROACH RAILING DETAILS.

PROJECT NAME: ROCKINGHAM	
PROJECT NUMBER: BRF 0126(12)	
T·Y·LIN INTERNATIONAL	FILE NAME: z10J072bdr_rail_03.dgn
	PROJECT LEADER: R. HEBERT
	DESIGNED BY: S. KELLER
	BRIDGE RAILING DETAILS (3 OF 3)
	PLOT DATE: 7/28/2014
	DRAWN BY: D. AXTELL
	CHECKED BY: T. POULIN
	SHEET 43 OF 69

STATE OF VERMONT
AGENCY OF TRANSPORTATION

REINFORCING STEEL SCHEDULE

ITEM	EACH	SIZE	LENGTH	MARK	TYPE	A	B	C	D	E	F	G	H	J	K	R	O
DECK REINFORCEMENT																	
				PHASE I													
	210	5	40'- 0"	D501	STR												
	42	5	19'- 0"	D502	STR												
	814	5	22'- 8"	D503	STR												
	407	5	5'- 10"	D504	17		4'- 0"	0'- 5"	1'- 6"								
	5	5	28'- 0"	D506	STR												
	5	5	29'- 1"	D508	STR												
	5	5	22'- 7"	D510	STR												
	5	5	21'- 7"	D512	STR												
	64	5	5'- 4"	D514	17		2'- 1"	3'- 4"									
	32	5	5'- 1"	D515	S6	0'- 7"	0'- 5"	3'- 4"	0'- 5"			0'- 7"					
	84	5	9'- 6"	D516	17		3'- 7"	6'- 0"									
				PHASE II													
	245	5	40'- 0"	D501	STR												
	49	5	19'- 0"	D502	STR												
	407	5	5'- 10"	D504	17		4'- 0"	0'- 5"	1'- 6"								
	814	5	22'- 5"	D505	STR												
	5	5	28'- 8"	D507	STR												
	5	5	27'- 7"	D509	STR												
	5	5	21'- 2"	D511	STR												
	5	5	22'- 2"	D513	STR												
	76	5	5'- 4"	D514	17		2'- 1"	3'- 4"									
	38	5	5'- 1"	D515	S6	0'- 7"	0'- 5"	3'- 4"	0'- 5"			0'- 7"					
	98	5	9'- 6"	D516	17		3'- 7"	6'- 0"									
WINGWALL 1 REINFORCEMENT (ABUT. #1 PHASE #2)																	
	5	4	12'- 3"	1W401	17		6'- 0"	0'- 5"	6'- 0"								
	12	5	10'- 9"	1W501	STR												
	7	5	7'- 0"	1W502	2	2'- 3"	2'- 8"					2'- 3"					
	1	5	6'- 2"	1W503	22		3'- 11"	2'- 3"	0'- 0"				0'- 10"	0'- 0"	3'- 10"	0'- 0"	
	1	5	5'- 8"	1W504	22		3'- 11"	1'- 9"	0'- 0"				0'- 10"	0'- 0"	3'- 10"	0'- 0"	
	1	5	5'- 2"	1W505	22		3'- 11"	1'- 3"	0'- 0"				0'- 10"	0'- 0"	3'- 10"	0'- 0"	
	1	5	4'- 8"	1W506	22		3'- 11"	0'- 9"	0'- 0"				0'- 10"	0'- 0"	3'- 10"	0'- 0"	
WINGWALL 2 REINFORCEMENT (ABUT. #1 PHASE #1)																	
	5	4	12'- 3"	2W401	17		6'- 0"	0'- 5"	6'- 0"								
	12	5	9'- 6"	2W501	STR												
	1	5	5'- 0"	2W502	STR												
	1	5	5'- 9"	2W503	STR												
	1	5	6'- 6"	2W504	STR												
	1	5	7'- 0"	2W505	STR												
	5	5	7'- 0"	2W506	2	2'- 3"	2'- 8"					2'- 3"					
	1	5	5'- 11"	2W507	22		5'- 6"	0'- 5"	0'- 0"				3'- 4.5"	0'- 0"	4'- 4.5"	0'- 0"	
	1	5	6'- 5"	2W508	22		5'- 6"	0'- 11"	0'- 0"				3'- 4.5"	0'- 0"	4'- 4.5"	0'- 0"	
	1	5	6'- 11"	2W509	22		5'- 6"	1'- 5"	0'- 0"				3'- 4.5"	0'- 0"	4'- 4.5"	0'- 0"	
	1	5	7'- 5"	2W510	22		5'- 6"	1'- 11"	0'- 0"				3'- 4.5"	0'- 0"	4'- 4.5"	0'- 0"	
	1	6	5'- 0"	2W601	STR												
	1	6	5'- 3"	2W602	STR												
	1	6	5'- 6"	2W603	STR												
	1	6	5'- 9"	2W604	STR												
	1	6	6'- 0"	2W605	STR												
	1	6	6'- 3"	2W606	STR												
	1	6	6'- 6"	2W607	STR												
	1	6	6'- 9"	2W608	STR												
WINGWALL 3 REINFORCEMENT (ABUT # 2 PHASE #1)																	
	5	4	12'- 3"	3W401	17		6'- 0"	0'- 5"	6'- 0"								
	12	5	9'- 6"	3W501	STR												
	1	5	6'- 6"	3W502	STR												
	1	5	7'- 0"	3W503	STR												
	1	5	5'- 7"	3W504	22		3'- 7"	2'- 0"	0'- 0"				1'- 4.5"	0'- 3"	3'- 4.5"	0'- 0"	
	1	5	5'- 1"	3W505	22		3'- 7"	1'- 6"	0'- 0"				1'- 4.5"	0'- 3"	3'- 4.5"	0'- 0"	
	1	5	4'- 6"	3W506	22		3'- 7"	0'- 11"	0'- 0"				1'- 4.5"	0'- 3"	3'- 4.5"	0'- 0"	
	1	5	4'- 0"	3W507	22		3'- 7"	0'- 5"	0'- 0"				1'- 4.5"	0'- 3"	3'- 4.5"	0'- 0"	
	1	6	6'- 6"	3W601	STR												
	1	6	6'- 8"	3W602	STR												
	1	6	6'- 10"	3W603	STR												
	1	6	7'- 0"	3W604	STR												

ITEM	EACH	SIZE	LENGTH	MARK	TYPE	A	B	C	D	E	F	G	H	J	K	R	O
WINGWALL 4 REINFORCEMENT (ABUT. #2 PHASE #2)																	
	5	4	12'- 3"	4W401	17		6'- 0"	0'- 5"	6'- 0"								
	12	5	10'- 9"	4W501	STR												
	1	5	6'- 8"	4W502	STR												
	1	5	6'- 2"	4W503	STR												
	5	5	7'- 0"	4W504	2	2'- 3"	2'- 8"					2'- 3"					
	1	5	6'- 1"	4W505	22		5'- 5"	0'- 8"	0'- 0"				2'- 5"	0'- 0"	4'- 11"	0'- 0"	
	1	5	6'- 8"	4W506	22		5'- 5"	1'- 3"	0'- 0"				2'- 5"	0'- 0"	4'- 11"	0'- 0"	
	1	5	7'- 2"	4W507	22		5'- 5"	1'- 9"	0'- 0"				2'- 5"	0'- 0"	4'- 11"	0'- 0"	
	1	5	7'- 8"	4W508	22		5'- 5"	2'- 3"	0'- 0"				2'- 5"	0'- 0"	4'- 11"	0'- 0"	
	1	6	6'- 10"	4W601	STR												
	1	6	6'- 8"	4W602	STR												
	1	6	6'- 6"	4W603	STR												
	1	6	6'- 4"	4W604	STR												
	1	6	6'- 2"	4W605	STR												
ABUTMENT 1 REINFORCEMENT																	
				PHASE I													
	22	5	7'- 0"	1A501	STR												
	25	5	8'- 6"	1A502	17		3'- 0"	2'- 6"	3'- 0"								
	6	5	26'- 0"	1A503	STR												
	6	5	24'- 11"	1A504	STR												
	69	6	7'- 0"	1A601	STR												
				PHASE II													
	29	5	7'- 0"	1A501	STR												
	25	5	8'- 6"	1A502	17		3'- 0"	2'- 6"	3'- 0"								
	6	5	26'- 0"	1A503	STR												
	6	5	24'- 11"	1A504	STR												
	83	6	7'- 0"	1A601	STR												
ABUTMENT 2 REINFORCEMENT																	
				PHASE I													
	24	5	7'- 0"	2A501	STR												
	25	5	8'- 6"	2A502	17		3'- 0"	2'- 6"	3'- 0"								
	6	5	23'- 5"	2A503	STR												
	6	5	25'- 0"	2A504	STR												
	67	6	7'- 0"	2A601	STR												
				PHASE II													
	27	5	7'- 0"	2A501	STR												
	29	5	8'- 6"	2A502	17		3'- 0"	2'- 6"	3'- 0"								
	6	5	27'- 2"	2A505	STR												
	6	5	28'- 3"	2A506	STR												
	85	6	7'- 0"	2A601	STR												
APPROACH SLAB REINFORCEMENT																	
	42	5	18'- 9"	AS501	STR												
	42	5	21'- 2"	AS502	STR												
✳	43	5	2'- 8"	AS503	STR												
✳	89	9	20'- 11"	AS901	1	1'- 3"	19'- 8"					0'- 0"		0'- 10"			

~ NOTES ~

1. UNLESS OTHERWISE DESIGNATED, ALL BAR REINFORCEMENT FOR CONCRETE IN SIZES UP TO AND INCLUDING NO. 18 SHALL CONFORM TO THE REQUIREMENTS OF THE "SPECIFICATIONS FOR DEFORMED BILLET-STEEL BARS FOR CONCRETE REINFORCEMENT", AASHTO M 31 (ASTM A 615-SI). ALL BARS SHALL BE GRADE 60, UNLESS OTHERWISE DESIGNATED.
2. FOR TYPICAL BENDING DETAILS, RECOMMENDED PIN DIAMETER "D" OF BENDS AND HOOKS, AND OTHER STANDARD PRACTICE, SEE CURRENT CONCRETE REINFORCING STEEL INSTITUTE "MANUAL OF STANDARD PRACTICE".
3. BARS WHICH REQUIRE MORE ACCURATE BENDING THAN STANDARD PRACTICES SHOULD HAVE LIMITS INDICATED.
4. ALL DIMENSIONS ARE OUT TO OUT OF BAR EXCEPT "A" AND "G" ON STANDARD 180 DEGREE AND 135 DEGREE HOOKS.
5. "J" DIMENSION ON 180 DEGREE HOOKS TO BE SHOWN ONLY WHERE NECESSARY TO RESTRICT HOOK SIZE. OTHERWISE, STANDARD HOOKS ARE TO BE USED.
6. "H" DIMENSION ON STIRRUPS TO BE SHOWN ONLY WHEN NECESSARY TO MAINTAIN CLEARANCES.
7. WHERE SLOPE DIFFERS FROM 45 DEGREES, DIMENSIONS "H" AND "K" MUST BE SHOWN.
8. ▲ DENOTES BARS TO BE CUT IN FIELD.
9. ✳ DENOTES ONE EXTRA BAR ADDED FOR TESTING PURPOSES.
10. △ DENOTES TWO EXTRA BARS ADDED FOR TESTING PURPOSES.
11. SUPERSTRUCTURE, ABUTMENT, AND PIER REINFORCEMENT SHALL BE LEVEL II.
    APPROACH SLAB REINFORCEMENTSHALL BE LEVEL I.

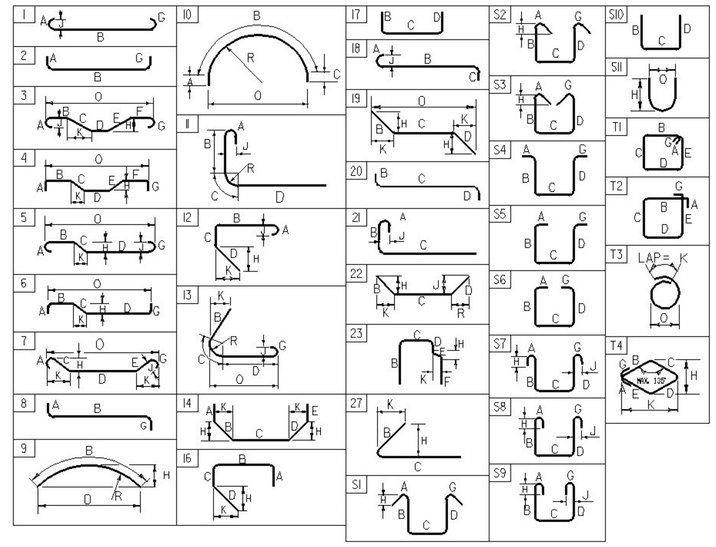

ASTM STANDARD REINFORCING BARS

BAR SIZE DESIGNATION	WEIGHT POUNDS PER FOOT	NOMINAL DIMENSIONS ROUND SECTION		
		DIAMETER INCHES	AREA INCHES ^{2}	PERIMETER INCHES
#3	0.376	0.375	0.11	1.178
#4	0.668	0.500	0.20	1.571
#5	1.043	0.625	0.31	1.963
#6	1.502	0.750	0.44	2.356
#7	2.044	0.875	0.60	2.749
#8	2.670	1.000	0.79	3.142
#9	3.400	1.128	1.00	3.544
#10	4.303	1.270	1.27	3.990
#11	5.313	1.410	1.56	4.430
#14	7.65	1.693	2.25	5.32
#18	13.60	2.257	4.00	7.09

CALDERWOOD ENGINEERING, ETC.
STRUCTURAL ENGINEERING • DETAILING SERVICES
222 RIVER RD, RICHMOND, ME 04357 PH/FX (207)737-2007/(207) 737-2008

PREPARED FOR:
COLD RIVER BRIDGES, LLC

CEE 106-BR-14

	BY	DATE
DESIGN-DETAILED	ETC	2014
CHECKED-REVIEWED		
REVISIONS 1		
REVISIONS 2		
REVISIONS 3		
REVISIONS 4		
FIELD CHANGES		

P.E. NUMBER

DATE:

VE SUPER. DESIGN
ROCKINGHAM VT. BRF 0126 (12)

REINFORCING STEEL SCHEDULE

SHEET NUMBER

44

CALDERWOOD ENGINEERING
222 RIVER ROAD
RICHMOND, ME 04357
PH. (207) 737-2007 FAX (207) 737-2008

STA. 22+11.79
BEGIN BRIDGE

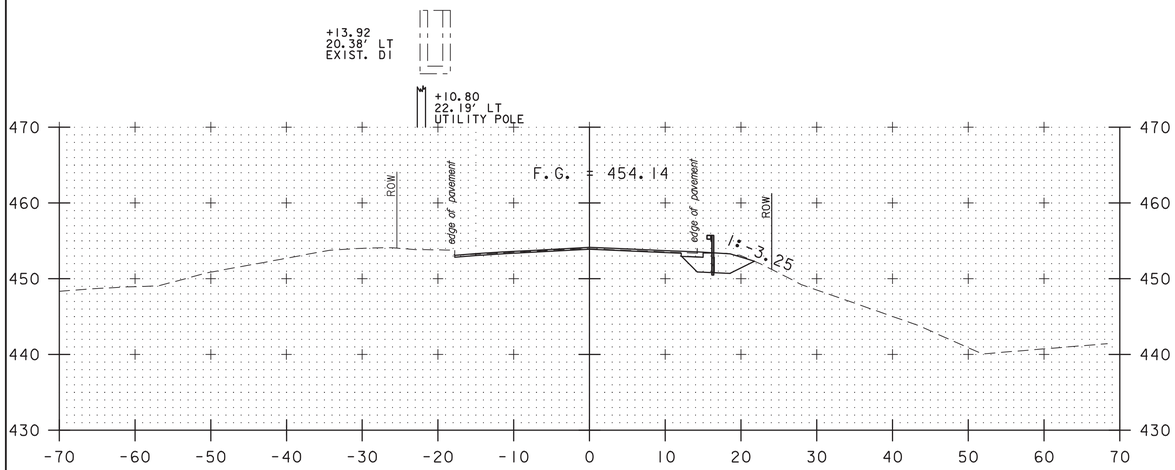

21+00

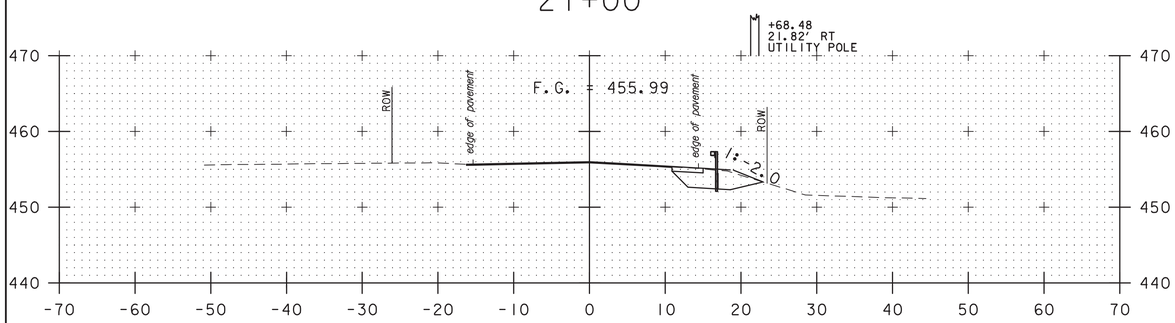

20+50

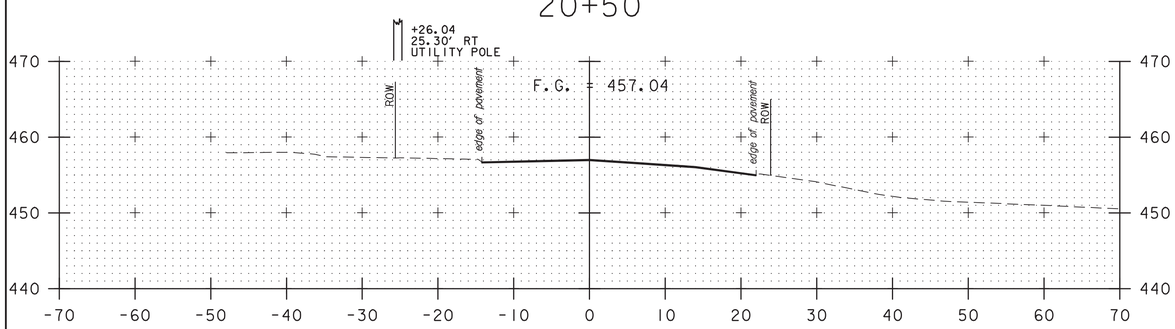

20+26

STA. 20+26.19
BEGIN APPROACH
MATCH EXISTING PAVEMENT

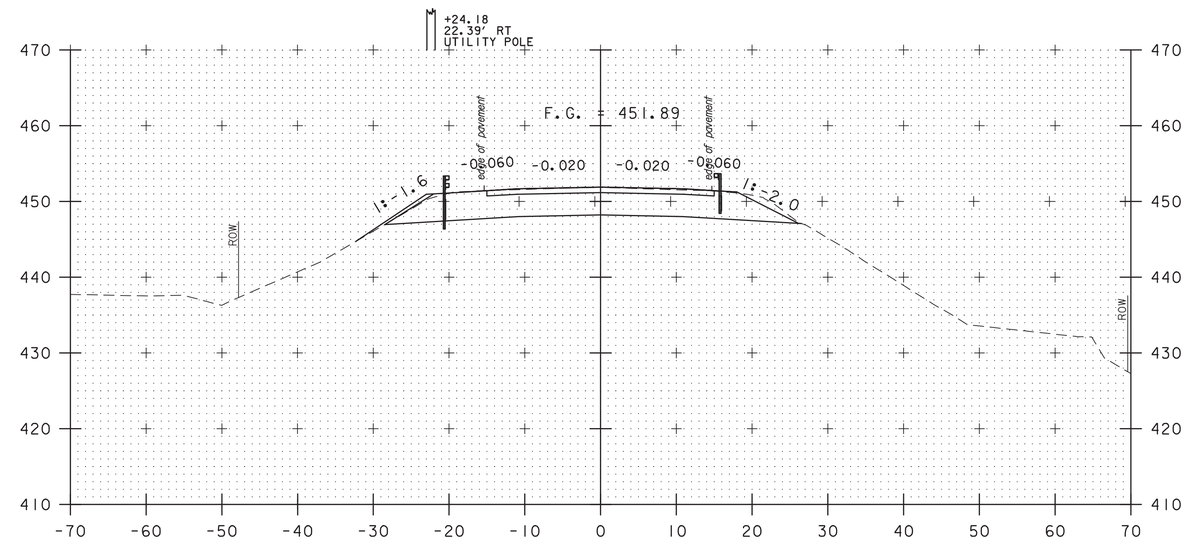

STA. 21+91.79
END APPROACH
BEGIN PROJECT BRF 0126(12)

21+50

22+00

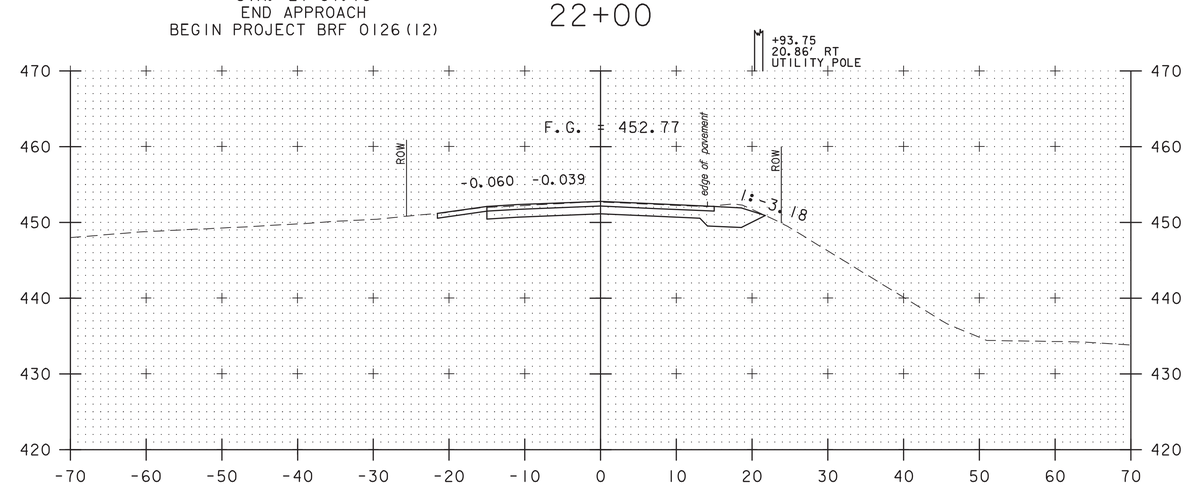

SCALE 1" = 10'-0"

STA. 20+26 TO STA. 22+00

PROJECT NAME: ROCKINGHAM
PROJECT NUMBER: BRF 0126(12)

T·Y·LIN INTERNATIONAL

FILE NAME: z10J072bdr_xs.dgn
PROJECT LEADER: R. HEBERT
DESIGNED BY: D. BRYANT
VT ROUTE 121 - CROSS SECTIONS - 1

PLOT DATE: 7/28/2014
DRAWN BY: D. BRYANT
CHECKED BY: D. BURHANS
SHEET 45 OF 69

STA. 25+12.79
END APPROACH
MATCH EXISTING PAVEMENT

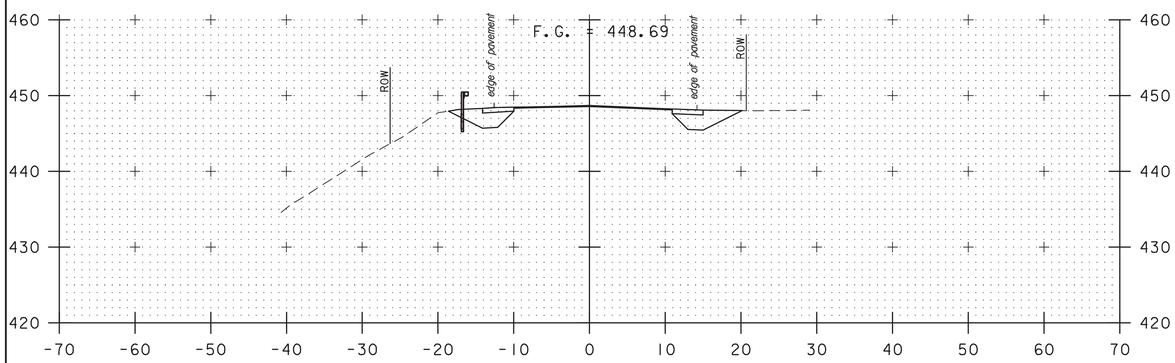

25+00

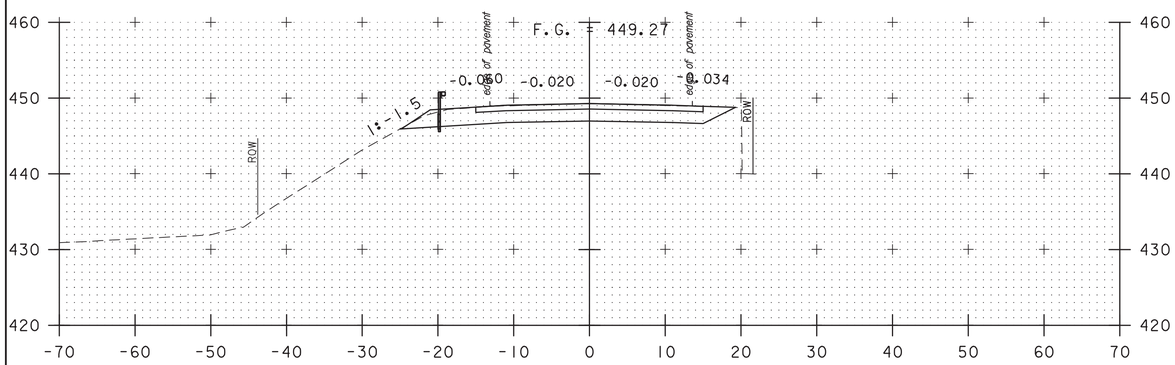

24+50

STA. 24+34.48
END PROJECT BRF 0126(12)
BEGIN APPROACH

STA. 24+14.48
END BRIDGE

SCALE 1" = 10'-0"

STA. 24+50 TO STA. 25+00

PROJECT NAME: ROCKINGHAM
PROJECT NUMBER: BRF 0126(12)

T·Y·LIN INTERNATIONAL

FILE NAME: z10J072bdr_xs.dgn
PROJECT LEADER: R. HEBERT
DESIGNED BY: D. BRYANT
VT ROUTE 121 - CROSS SECTIONS - 2

PLOT DATE: 7/28/2014
DRAWN BY: D. BRYANT
CHECKED BY: D. BURHANS
SHEET 46 OF 69

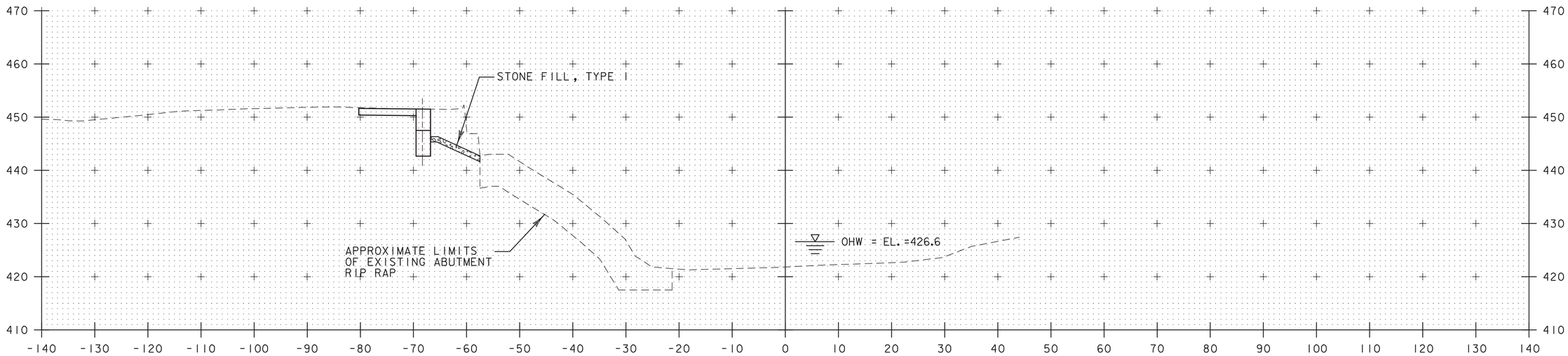

STA 61+07.38 LEFT
BEGIN GEOTEXTILE UNDER STONE FILL
STONE FILL, TYPE I

61+25

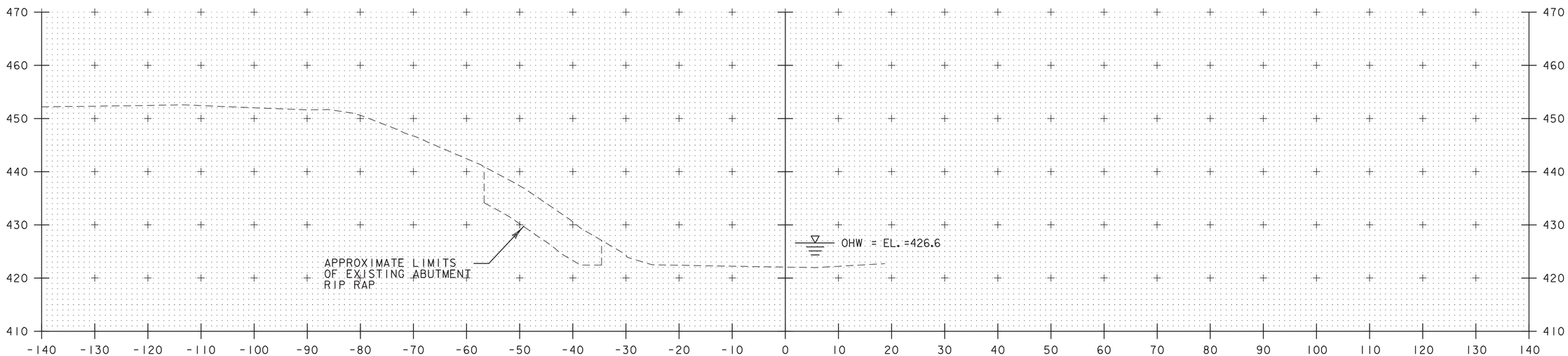

61+00

SCALE 1" = 10'-0"

STA. 61+00 TO STA. 61+25

PROJECT NAME: ROCKINGHAM	
PROJECT NUMBER: BRF 0126(12)	
FILE NAME: z10J072bdr_xs02.dgn	PLOT DATE: 7/28/2014
PROJECT LEADER: R. HEBERT	DRAWN BY: D. BURHANS
DESIGNED BY: D. BURHANS	CHECKED BY: D. BRYANT
CHANNEL CROSS SECTIONS - 1	SHEET 47 OF 69

T·Y·LIN INTERNATIONAL

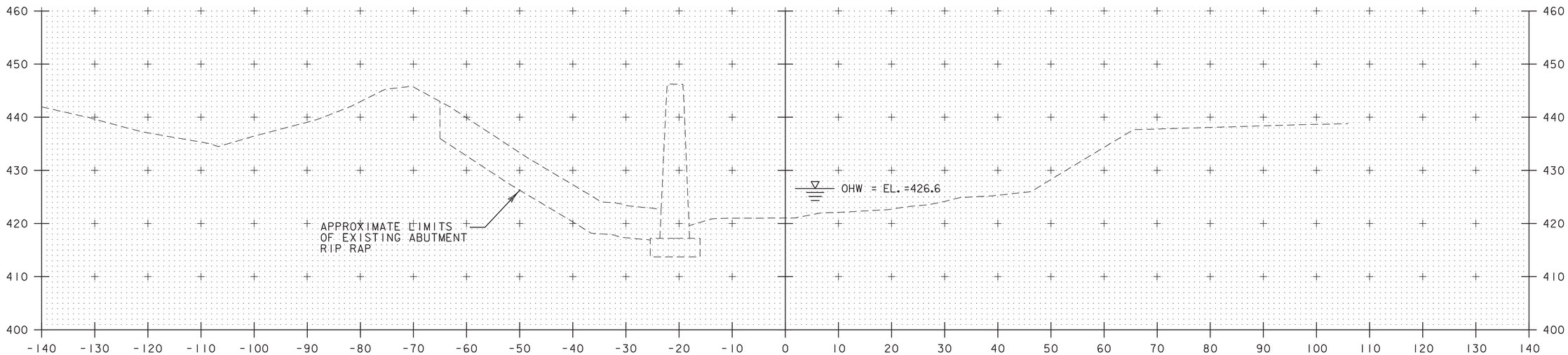

STA 61+74.48 LEFT
END GEOTEXTILE UNDER STONE FILL
STONE FILL, TYPE I

61+75

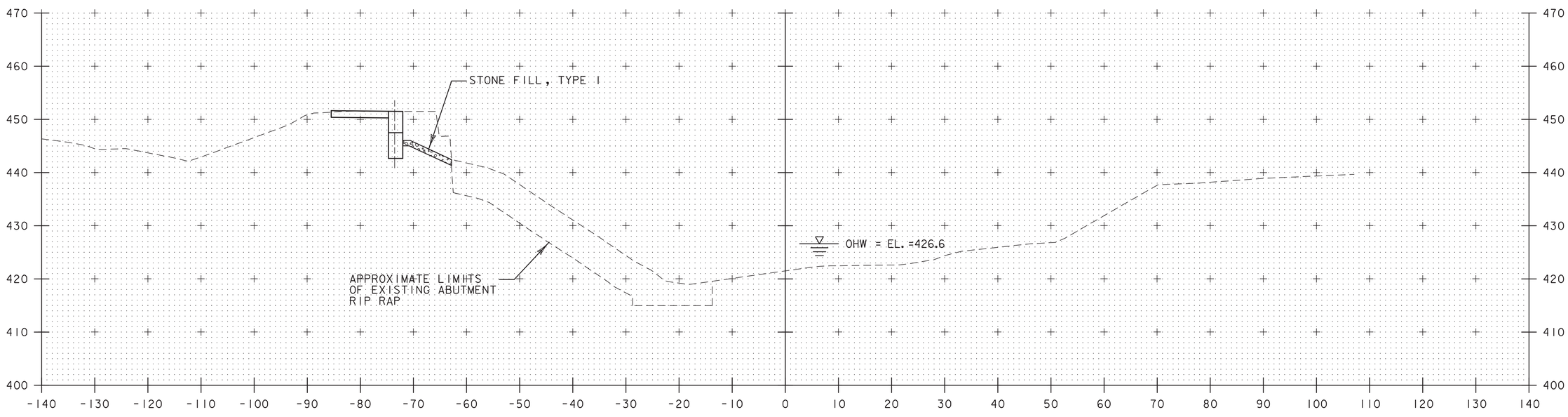

61+50

SCALE 1" = 10'-0"

STA. 61+50 TO STA. 61+75

PROJECT NAME: ROCKINGHAM
PROJECT NUMBER: BRF 0126(12)

T·Y·LIN INTERNATIONAL

FILE NAME: z10J072bdr_xs02.dgn
PROJECT LEADER: R. HEBERT
DESIGNED BY: D. BURHANS
CHANNEL CROSS SECTIONS - 2

PLOT DATE: 7/28/2014
DRAWN BY: D. BURHANS
CHECKED BY: D. BRYANT
SHEET 48 OF 69

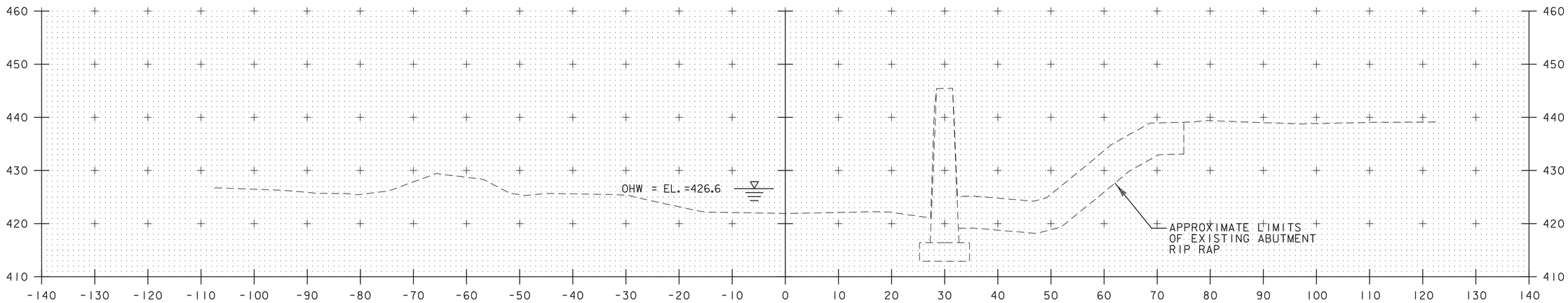

62+25

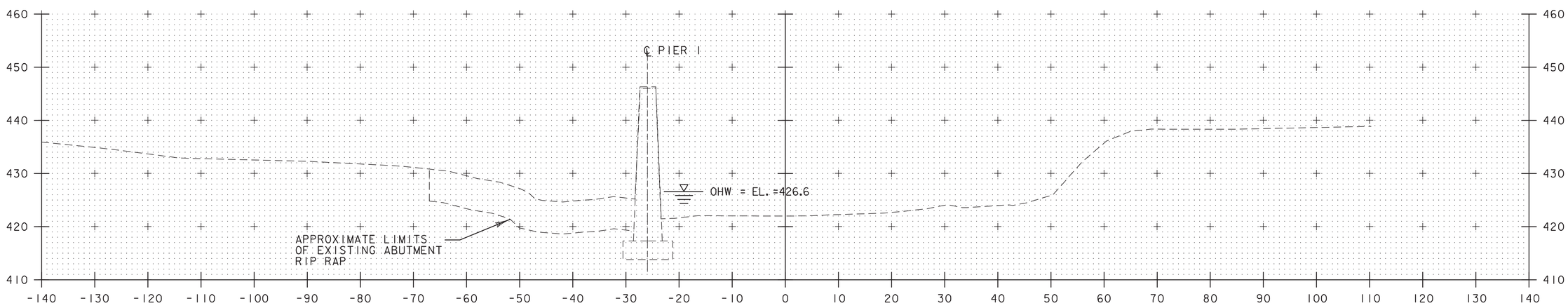

62+00

STA. 62+00 TO STA. 62+25

SCALE 1" = 10'-0"

PROJECT NAME:	ROCKINGHAM
PROJECT NUMBER:	BRF 0126(12)

T·Y·LIN INTERNATIONAL

FILE NAME: z10J072bdr_xs02.dgn	PLOT DATE: 7/28/2014
PROJECT LEADER: R. HEBERT	DRAWN BY: D. BURHANS
DESIGNED BY: D. BURHANS	CHECKED BY: D. BRYANT
CHANNEL CROSS SECTIONS - 3	SHEET 49 OF 69

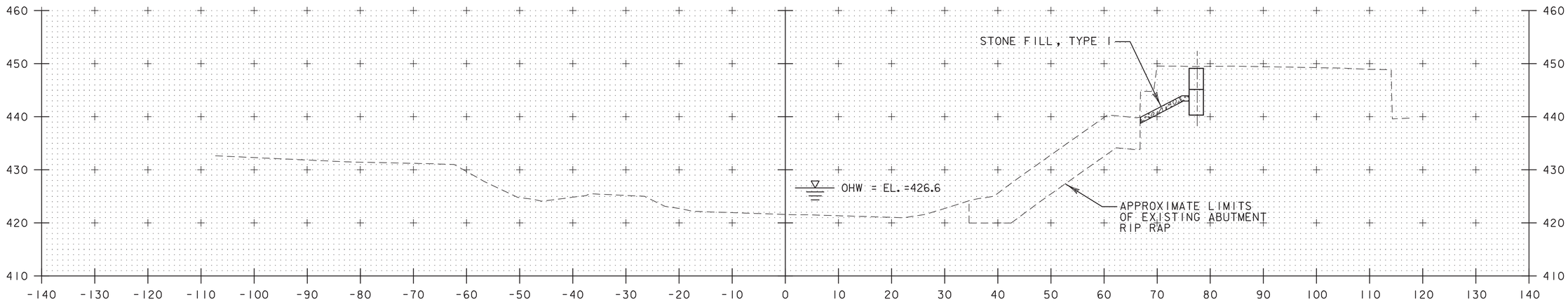

62+75

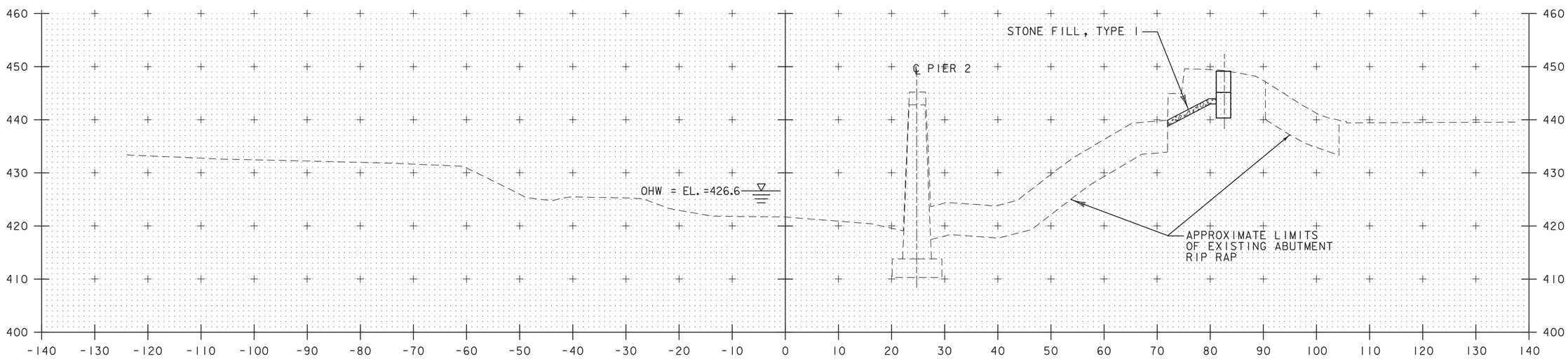

STA 62+37.05 RIGHT
BEGIN GEOTEXTILE UNDER STONE FILL
STONE FILL, TYPE I

62+50

SCALE 1" = 10'-0"

STA. 62+50 TO STA. 62+75

PROJECT NAME: ROCKINGHAM
PROJECT NUMBER: BRF 0126(12)

T·Y·LIN INTERNATIONAL

FILE NAME: z10J072bdr_xs02.dgn
PROJECT LEADER: R. HEBERT
DESIGNED BY: D. BURHANS
CHANNEL CROSS SECTIONS - 4

PLOT DATE: 7/28/2014
DRAWN BY: D. BURHANS
CHECKED BY: D. BRYANT
SHEET 50 OF 69

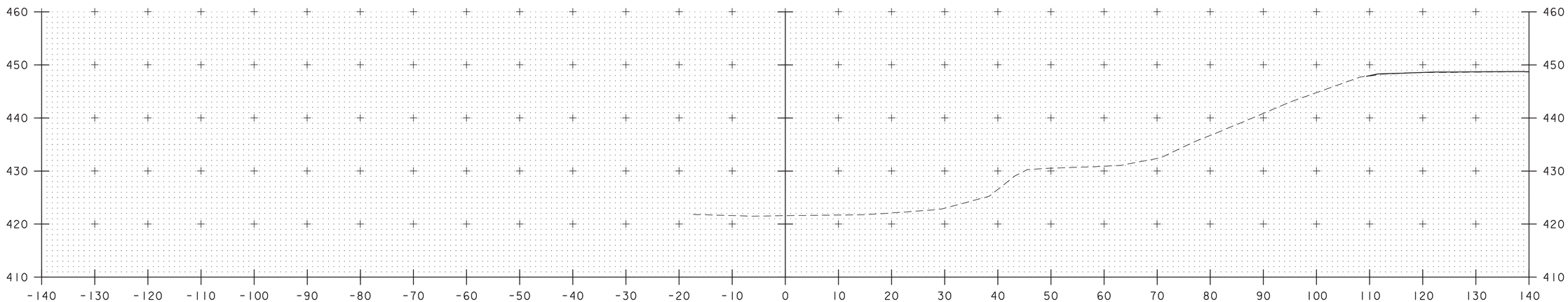

63+25

STA 63+12.02 RIGHT
END GEOTEXTILE UNDER STONE FILL
STONE FILL, TYPE I

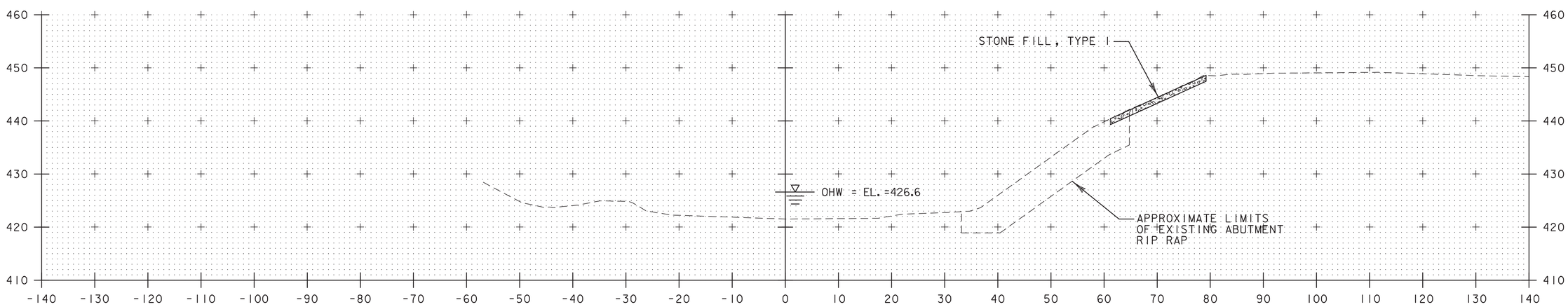

63+00

STA. 63+00 TO STA. 63+25

SCALE 1" = 10'-0"

PROJECT NAME:	ROCKINGHAM
PROJECT NUMBER:	BRF 0126(12)

T·Y·LIN INTERNATIONAL

FILE NAME: z10J072bdr_xs02.dgn	PLOT DATE: 7/28/2014
PROJECT LEADER: R. HEBERT	DRAWN BY: D. BURHANS
DESIGNED BY: D. BURHANS	CHECKED BY: D. BRYANT
CHANNEL CROSS SECTIONS - 5	SHEET 51 OF 69

EROSION CONTROL NARRATIVE

1.1 PROJECT DESCRIPTION

THIS PROJECT INVOLVES THE REPLACEMENT OF THE BRIDGE ON STATE ROUTE 121 SPANNING OVER THE BODY OF WATER KNOWN AS SAXTONS RIVER IN THE TOWN OF ROCKINGHAM. WORK WILL INVOLVE REPLACEMENT OF BOTH ABUTMENTS AND THE BRIDGE SUPERSTRUCTURE ON THE EXISTING ALIGNMENT. EXISTING ABUTMENTS WILL BE PARTIALLY REMOVED TO THE LIMITS SHOWN ON THE EARTHWORK TYPICAL SECTION SHEET. ALSO INCLUDED WILL BE RELATED CHANNEL AND APPROACH WORK. THE LENGTH OF THE PROJECT IS APPROXIMATELY 243 FEET ALONG VT ROUTE 121. THE SITE IS LOCATED, BASED ON NAD 83/92 AT 233073.66 N, 1639680.82 E (POINT HVCTRL #2- SEE TIE SHEET).

NOTE: AREA OF DISTURBANCE INCLUDES LIMITS OF EARTH DISTURBANCE WITHIN THE PROJECT AREA AS SHOWN ON THE ATTACHED EPSC PLAN. THE AREA OF DISTURBANCE DOES NOT INCLUDE WASTE, BORROW AND STAGING AREAS. THE CONTRACTOR IS RESPONSIBLE FOR SUBMITTING TO VTRANS ENVIRONMENTAL SECTION FOR APPROVAL, THE LOCATION OF THE WASTE, BORROW AND STAGING AREAS, AS WELL AS THE MATERIAL STOCKPILE, REFUELING AND MAINTENANCE AREAS. A MAP SHALL BE ATTACHED IF NECESSARY.

TOTAL AREA OF DISTURBANCE IS APPROXIMATELY 17,067 SF (0.39 ACRES).

IT IS ANTICIPATED THAT THE PROJECT WILL LAST ONE CONSTRUCTION SEASON.

1.2 SITE INVENTORY

1.2.1 TOPOGRAPHY, EXISTING ROADS, UTILITIES

THE TOPOGRAPHY SURROUNDING THE PROJECT SITE CONSISTS MOSTLY OF LIGHTY WOODED AREAS AND RESIDENTIAL PROPERTIES WITH WELL ESTABLISHED LAWNS. PORTIONS NEAR THE WATER BODY INCLUDE LIGHTLY WOODED AREAS WITH MODERATE SLOPES. THE GENERAL TOPOGRAPHY OF THE AREA SLOPES FROM THE SOUTH TO THE NORTH. ALL ROAD SURFACES IN THE PROJECT AREA ARE BITUMINOUS CONCRETE PAVEMENT. THERE IS ONE COMMERICAL BUILDING AND ONE RESIDENTIAL BUILDING ON THE SOUTH AND NORTH SIDES OF THE EAST APPROACH ROADWAY RESPECTIVELY. THERE IS ONE RESIDENTIAL BUILDING ON EACH SIDE OF THE WEST APPROACH ROADWAY.

THERE ARE OVERHEAD ELECTRICAL AND TELEPHONE LINES ON THE EAST AND WEST ENDS OF THE PROJECT THAT SPAN THE FULL LENGTH OF THE BRIDGE ON THE NORTH SIDE. OVERHEAD LINES ALSO CROSS ROUTE 121 ON THE EAST AND WEST ENDS OF THE PROJECT.

1.2.2 DRAINAGE, WATERWAYS, BODIES OF WATER, AND PROXIMITY TO NATURAL OR MAN-MADE WATER FEATURES

THE BRIDGE SPANS THE BODY OF WATER KNOWN AS SAXTONS RIVER. THE STREAM IS CHARACTERIZED AS STRAIGHT TO SINUOUS, ALLUVIAL, PROBABLY INCISED AND STABLE WITH A GRAVEL AND COBBLE STREAMBED. THERE IS ALSO AN UNNAMED STREAM NEAR THE NORTHWEST CORNER OF THE BRIDGE.

THE FOLLOWING DESCRIPTIONS ARE FOR THE EXISTING SITE PLANS: SURFACE DRAINAGE FROM STATE ROUTE 121 FLOWS DOWN EXISTING VEGETATED AND WOODED SIDESLOPES AND INTO SAXTONS RIVER.

1.2.3 VEGETATION

THE VEGETATION IN THE PROJECT AREA CONSISTS MOSTLY OF LIGHTLY WOODED AREAS. THE IMPACT TO VEGETATION WILL BE LIMITED TO THAT WHICH IS REQUIRED FOR REPLACEMENT OF THE EXISTING BRIDGE. DISTURBED VEGETATION WILL BE REESTABLISHED WITH STANDARD SEED AND MULCH PRACTICES OR REPLACED WITH STONE FILL.

1.2.4 SOILS

SOIL DATA CAME FROM THE U.S. DEPARTMENT OF AGRICULTURE NATURAL RESOURCES CONSERVATION SERVICE FOR THE COUNTY OF WINDHAM, VERMONT. SOILS ON THE PROJECT SITE ARE:

THROUGHOUT THE PROJECT THE SOIL TYPE IS QUONSET AND WARWICK, 2 TO 8 PERCENT SLOPE, “K FACTOR” = 0.16. THE EROSION HAZARD IS “LOW” DUE TO ITS K FACTOR.

1.2.4 SENSITIVE RESOURCE AREAS

CRITICAL HABITATS: SAXTONS RIVER IS DEFINED AS ESSENTIAL FISH HABITAT.
HISTORICAL OR ARCHAEOLOGICAL AREAS: THERE ARE SEVERAL AREAS OF ARCHAEOLOGICAL SIGNIFICANCE ON BOTH THE EAST AND WEST ENDS OF THE PROJECT. THE WEST BANK OF THE RIVER IS A NATIONAL REGISTERED LANDMARK DESIGNATED HISTORIC VILLAGE DISTRICT.
PRIME AGRICULTURE LAND: NO
THREATENED AND ENDANGERED SPECIES: NO
WATER RESOURCE: SAXTONS RIVER AND UNNAMED BROOK
WETLANDS: NO

1.3 RISK EVALUATION

THE PROJECT DOES NOT FALL UNDER THE JURISDICTION OF GENERAL PERMIT 3-9020 FOR STORMWATER RUNOFF FROM CONSTRUCTION SITES FOR LOW RISK PROJECTS. ANY MODIFICATIONS TO THE PROJECT THAT INCREASE THE RISK TO ENVIRONMENTAL RESOURCES SHALL BE EVALUATED IN ACCORDANCE WITH THE PERMIT REQUIREMENTS. THE CONTRACTOR WILL BE RESPONSIBLE FOR ANY ADDITIONAL PERMITTING.

1.4 EROSION PREVENTION AND SEDIMENT CONTROL

THE EROSION CONTROL PLANS ARE MEANT AS A GUIDELINE FOR PREVENTING EROSION AND CONTROLLING SEDIMENT TRANSPORT. THE PRINCIPLES OUTLINED IN THIS NARRATIVE CONSISTS OF APPLYING MEASURES THROUGHOUT THE LIFE OF THE PROJECT TO AVOID SEDIMENT TRANSPORT TO THE RECEIVING WATERS. THE MEASURES INCLUDE STABILIZATION AND STRUCTURAL PRACTICES, STORM WATER CONTROLS AND OTHER POLLUTION PREVENTION PRACTICES. THEY HAVE BEEN PROPOSED BY THE DESIGNER AS A BASIS FOR PROTECTING RESOURCES AND WILL NEED TO BE BUILT UPON BASED ON THE SPECIFIC MEANS AND METHODS OF THE CONTRACTOR. REFER TO THE LOW RISK SITE HANDBOOK AND APPROPRIATE DETAIL SHEETS FOR SPECIFIC GUIDANCE AND CONSTRUCTION DETAILING.

ALL MEASURES SHALL BE REGULARLY MAINTAINED AND SHALL BE CHECKED FOR SEDIMENT BUILD-UP. SEDIMENT SHALL BE DISPOSED AT AN APPROVED SITE WHERE IT WILL NOT BE SUBJECT TO EROSION.

1.4.1 MARK SITE BOUNDARIES

SITE BOUNDARIES AND AREAS CONSTRUCTION EQUIPMENT CAN ACCESS SHALL BE DELINEATED.

THE SITE BOUNDARIES SHALL BE PHYSICALLY MARKED. THE CONTRACTOR MAY CHOOSE PROJECT DEMARCATION FENCING (PDF) AND/OR BARRIER FENCE TO MARK THE SITE BOUNDARIES.

1.4.2 LIMIT DISTURBANCE AREA

PREVENTING INITIAL SOIL EROSION BY MINIMIZING THE EXPOSED AREA IS MUCH MORE EFFECTIVE THAN TREATING ERODED SEDIMENT. EARTH DISTURBANCE CAN BE MINIMIZED THROUGH CONSTRUCTION PHASING BY ONLY OPENING UP EARTH AS NECESSARY. THIS CAN LIMIT THE AREA THAT WILL BE DISTURBED AND EXPOSED TO EROSION. EMPLOY TEMPORARY CONSTRUCTION STABILIZATION PRACTICES IN INCREMENTAL STAGES AS PHASES CHANGE. FOR PROJECTS WHICH FALL UNDER THE CONSTRUCTION GENERAL PERMIT, ONLY THE ACREAGE LISTED ON THE PERMIT AUTHORIZATION MAY BE EXPOSED AT ANY GIVEN TIME.

MAINTAINING VEGETATED BUFFERS ALONG STREAM BANKS, WETLANDS OR OTHER SENSITIVE AREAS IS A CRUCIAL EROSION AND SEDIMENT CONTROL MEASURE THAT SHOULD BE ESTABLISHED WHEREVER POSSIBLE.

1.4.3 SITE ENTRANCE/EXIT STABILIZATION

TRACKING OF SEDIMENT ONTO PUBLIC HIGHWAYS SHALL BE MINIMIZED TO REDUCE THE POTENTIAL FOR RUNOFF ENTERING RECEIVING WATERS. INSTALLATION SHALL COINCIDE WITH THE CONTRACTOR’S PROGRESS SCHEDULE. STABILIZED CONSTRUCTION ENTRANCES SHALL BE INSTALLED ANYWHERE EQUIPMENT WILL BE GOING FROM AREAS OF EXPOSED SOILS TO PAVED SURFACES.

1.4.4 INSTALL SEDIMENT BARRIERS

SEDIMENT BARRIERS SHALL BE UTILIZED TO INTERCEPT RUNOFF AND ALLOW SUSPENDED SEDIMENT TO SETTLE OUT. THEY SHOULD BE INSTALLED PRIOR TO ANY UPSLOPE WORK.

SILT FENCE WILL BE INSTALLED AS PROPOSED ON THE EPSC PLAN OR AS NECESSARY.

1.4.5 DIVERT UPLAND RUNOFF

DIVERSIONARY MEASURES SHALL BE USED TO INTERCEPT RUNOFF FROM ABOVE THE CONSTRUCTION AND DIRECT IT AROUND THE DISTURBED AREA SO THAT CLEAN WATER DOES NOT BECOME MUDDIED WHILE TRAVELING OVER EXPOSED SOILS ON THE CONSTRUCTION SITE.

DIVERSION OF UPLAND RUNOFF NOT ANTICIPATED.

1.4.6 SLOW DOWN CHANNELIZED RUNOFF

CHECK STRUCTURES SHALL BE UTILIZED TO REDUCE THE VELOCITY, AND THUS THE EROSIVE POTENTIAL, OF CONCENTRATED FLOW IN CHANNELS.

THE USE OF STONE CHECK DAMS IS NOT ANTICPATED FOR THIS PROJECT.

1.4.7 CONSTRUCT PERMANENT CONTROLS

PERMANENT STOMWATER TREATMENT DEVICES SHALL BE INSTALLED AS SHOWN ON THE PLANS.

SEED AND MULCH WILL BE USED AS PERMANENT CONTROLS TO STABILIZE EXPOSED SOIL. STONE FILL WILL BE USED TO STABILIZE THE STREAMBED SLOPES AROUND ABUTMENTS.

1.4.8 STABILIZE EXPOSED SOILS DURING CONSTRUCTION

ALL AREAS OF DISTURBANCE MUST HAVE TEMPORARY STABILIZATION IN PLACE WITHIN 48 HOURS OF DISTURBANCE.

SURFACE ROUGHENING OF ALL EXPOSED SLOPES, COMBINED WITH TEMPORARY MULCHING, SHALL BE UTILIZED ON A REGULAR BASIS. BIODEGRADABLE EROSION CONTROL MATTING OR AN EQUIVALENT SHALL BE USED TO STABILIZE ALL SLOPES STEEPER THAN 1:3.

THE FORECAST OF RAINFALL EVENTS SHALL TRIGGER IMMEDIATE PROTECTION OF EXPOSED SOILS.

1.4.9 WINTER STABILIZATION

VARIOUS MEASURES SPECIFIC TO WINTER MAY BE NECESSARY SHOULD THE PROJECT EXTEND INTO WINTER (OCTOBER 15 THROUGH APRIL 15). REFER TO THE LOW RISK SITE HANDBOOK FOR GUIDANCE.

1.4.10 STABILIZE SOIL AT FINAL GRADE

EXPOSED SOIL MUST BE STABILIZED WITHIN 48 HOURS OF REACHING FINAL GRADE.

SEED, MULCH, FERTILIZER, AND LIME SHALL BE USED TO ESTABLISH PERMANENT VEGETATION. FOR SLOPES STEEPER THAN 1:3, BIODEGRADABLE EROSION CONTROL MATTING OR AN EQUIVALENT SHALL BE USED INSTEAD OF MULCH.

1.4.11 DE-WATERING ACTIVITIES

DISCHARGE FROM DEWATERING ACTIVITIES THAT FLOWS OFF OF THE CONSTRUCTION SITE MUST NOT CAUSE OR CONTRIBUTE TO A VIOLATION OF THE VERMONT WATER QUALITY STANDARDS.

TREATMENT OF DEWATERING COFFERDAM IS NOT ANTICIPATED.

1.4.12 INSPECT YOUR SITE

INSPECT THE PROJECT SITE BASED ON SPECIAL PROVISION REQUIREMENTS OR CONSTRUCTION GENERAL PERMIT AUTHORIZATION STIPULATIONS.

1.5 SEQUENCE AND STAGING

THIS SECTION WILL BE DEVELOPED BY THE CONTRACTOR USING THE GUIDANCE OUTLINED IN THE VTRANS EPSC PLAN CONTRACTOR CHECKLIST.

1.5.2 OFF-SITE ACTIVITIES

IN ADDITION TO THE CONTRACTOR CHECKLIST ANY ACTIVITIES OUTSIDE THE CONSTRCTION LIMITS SHALL FOLLOW SUBSECTIONS 105.25- 105.29 OF THE STANDARD SPECIFICATIONS FOR CONSTRUCTION.

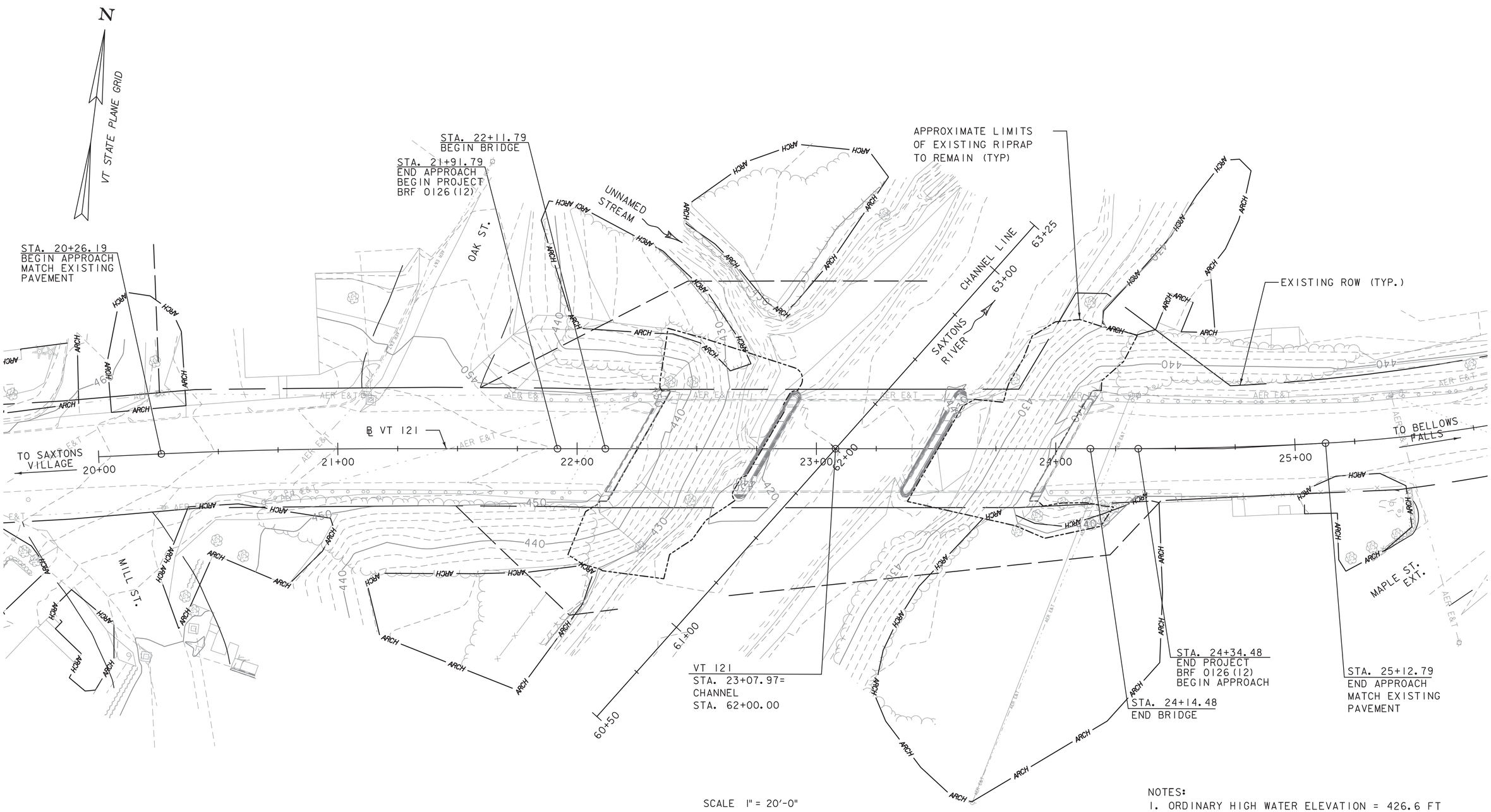

SCALE 1" = 20'-0"

0 20 40

SCALE IN FEET

NOTES:

1. ORDINARY HIGH WATER ELEVATION = 426.6 FT
2. CONTOURS REFLECT CONDITIONS PRIOR TO TROPICAL STORM IRENE, AUGUST 2011.

PROJECT NAME:	ROCKINGHAM
PROJECT NUMBER:	BRF 0126(12)

T·Y·LIN INTERNATIONAL

FILE NAME: z10J072bdr_ece01.dgn	PLOT DATE: 7/28/2014
PROJECT LEADER: R. HEBERT	DRAWN BY: S. AMOROSO
DESIGNED BY: S. AMOROSO	CHECKED BY: D. BRYANT
EPSC EXISTING CONDITIONS SITE PLAN	SHEET 53 OF 69

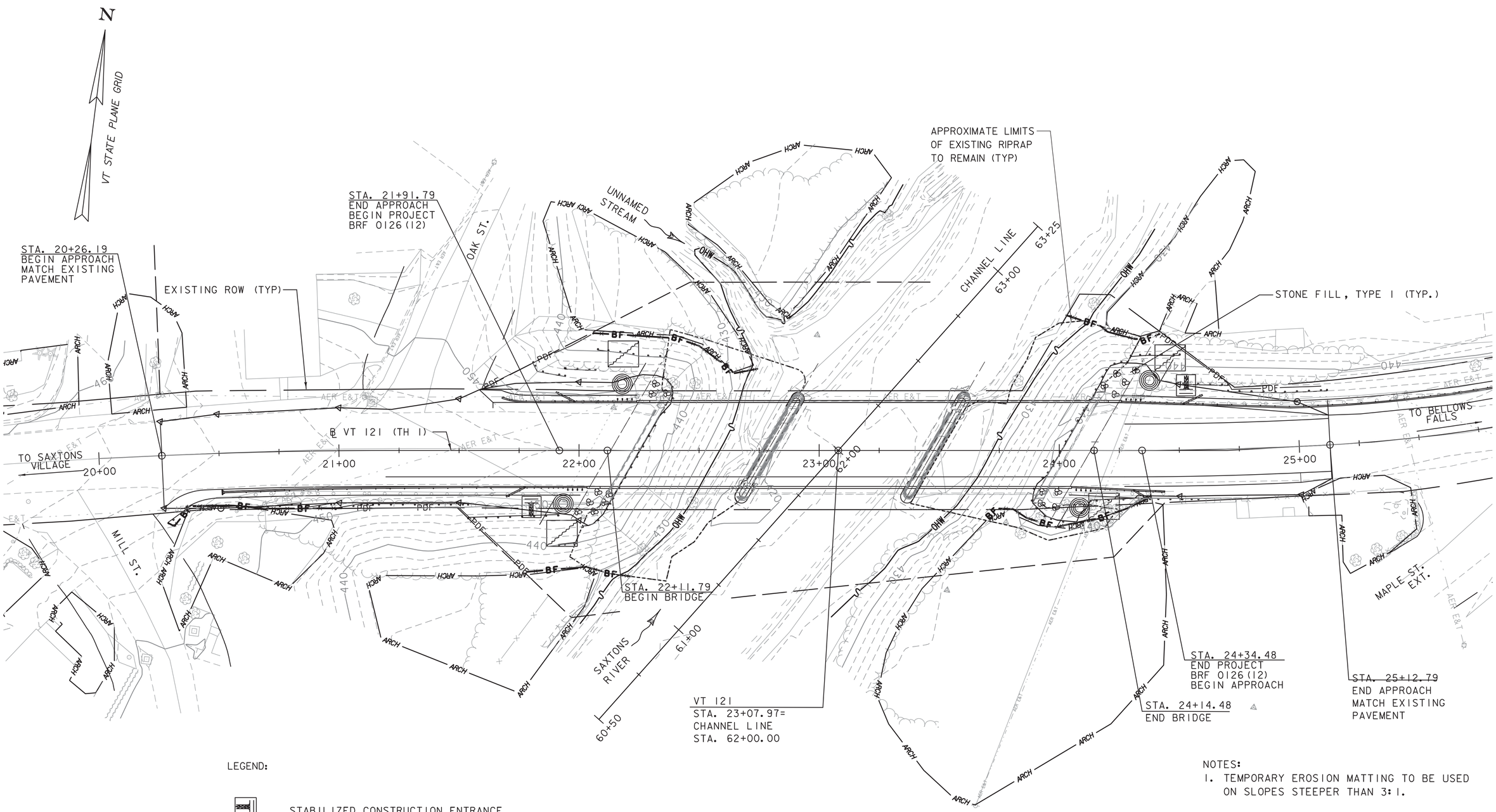

LEGEND:

STABILIZED CONSTRUCTION ENTRANCE

SURFACE ROUGHENING

SCALE 1" = 20'-0"

0 20 40

SCALE IN FEET

NOTES:

1. TEMPORARY EROSION MATTING TO BE USED ON SLOPES STEEPER THAN 3:1.
2. CONTOURS REFLECT CONDITIONS PRIOR TO TROPICAL STORM IRENE, AUGUST 2011.
3. ORDINARY HIGH WATER ELEVATION = 426.6 FT.

PROJECT NAME: ROCKINGHAM	
PROJECT NUMBER: BRF 0126(12)	
T·Y·LIN INTERNATIONAL	FILE NAME: z10J072bdr_ect01.dgn
	PROJECT LEADER: R. HEBERT
	DESIGNED BY: S. AMOROSO
	EPSC CONSTRUCTION CONDITIONS SITE PLAN
	PLOT DATE: 7/28/2014
	DRAWN BY: S. AMOROSO
	CHECKED BY: D. BRYANT
	SHEET 54 OF 69

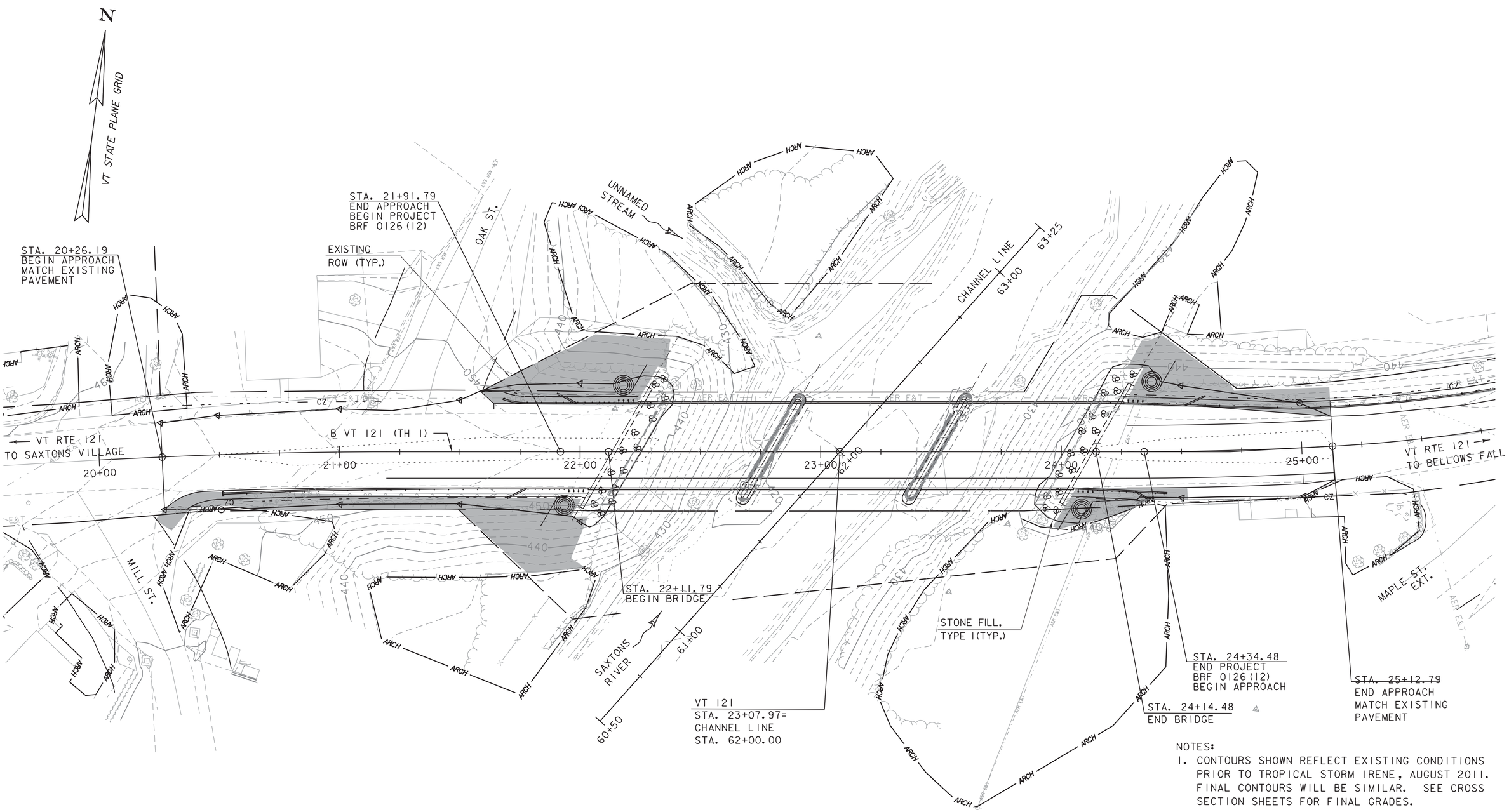

SCALE 1" = 20'-0"

0 20 40

SCALE IN FEET

NOTES:

1. CONTOURS SHOWN REFLECT EXISTING CONDITIONS PRIOR TO TROPICAL STORM IRENE, AUGUST 2011. FINAL CONTOURS WILL BE SIMILAR. SEE CROSS SECTION SHEETS FOR FINAL GRADES.
2. TEMPORARY EROSION MATTING TO BE USED ON SLOPES STEEPER THAN 3:1.
3. ORDINARY HIGH WATER ELEVATION = 426.6 FT.

PROJECT NAME:	ROCKINGHAM
PROJECT NUMBER:	BRF 0126(12)

T·Y·LIN INTERNATIONAL

FILE NAME: z10J072bdr_ecf01.dgn	PLOT DATE: 7/28/2014
PROJECT LEADER: R. HEBERT	DRAWN BY: S. AMOROSO
DESIGNED BY: S. AMOROSO	CHECKED BY: D. BRYANT
EPSC FINAL CONDITIONS SITE PLAN	SHEET 55 OF 69

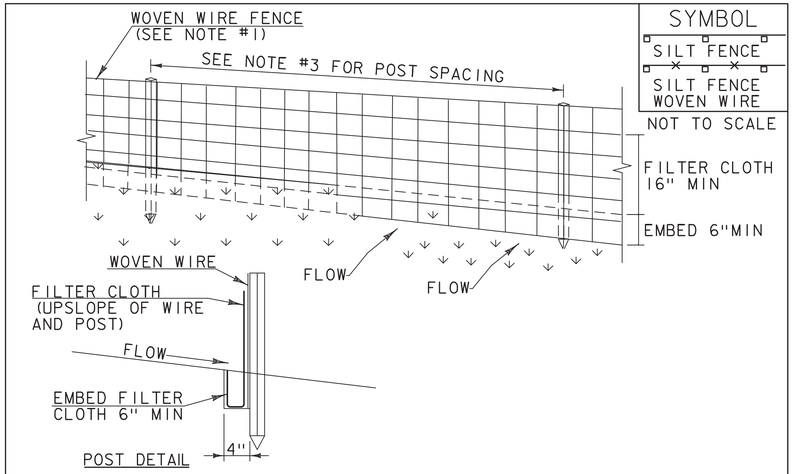

SYMBOL

SILT FENCE

SILT FENCE WOVEN WIRE

NOT TO SCALE

CONSTRUCTION SPECIFICATIONS

1. WOVEN WIRE REINFORCED FENCE IS REQUIRED WITHIN 100' UPSLOPE OF RECEIVING WATERS WHEN THE PROJECT FALLS UNDER A CONSTRUCTION STORMWATER PERMIT. WOVEN WIRE SHALL BE A MIN. 14 GAUGE WITH A 6" MAX. MESH OPENING.

2. FILTER CLOTH SHALL BE EITHER FILTER X, MIRAFI100X, STABILINKA T140N OR APPROVED EQUIVALENT.

3. POST SPACING FOR WIRE-BACKED FENCE SHALL BE 10' MAXIMUM. FOR FILTER-CLOTH FENCE, WHEN ELONGATION IS >50%, POST SPACING SHALL NOT EXCEED 4' AND WHEN ELONGATION IS <50%, POST SPACING SHALL NOT EXCEED 6'.

4. WOVEN WIRE FENCE IS TO BE FASTENED SECURELY TO FENCE POSTS WITH WIRE TIES. FILTER CLOTH IS TO BE FASTENED SECURELY TO WOVEN WIRE FENCE WITH TIES SPACED EVERY 24" AT TOP AND MID SECTION.

5. WHEN TWO SECTIONS OF FILTER CLOTH ADJOIN EACH OTHER THEY SHALL BE OVER-LAPPED BY 6" AND FOLDED.

6. PREFABRICATED UNITS SHALL BE GEOFAB, ENVIROFENCE, OR APPROVED EQUIVALENT.

7. MAINTENANCE SHALL BE PERFORMED AS NEEDED AND MATERIAL REMOVED WHEN SEDIMENT REACHES HALF OF FABRIC HEIGHT.

ADAPTED FROM DETAILS PROVIDED BY: NEW YORK STATE DEC
ORIGINALLY DEVELOPED BY USDA-NRCS
VERMONT DEPARTMENT OF ENVIRONMENTAL CONSERVATION

SILT FENCE

NOTES:
REFER TO "THE VERMONT STANDARDS & SPECIFICATIONS FOR EROSION PREVENTION & SEDIMENT CONTROL -2006- " FROM THE VT AGENCY OF NATURAL RESOURCES FOR ADDITIONAL GUIDANCE.

THIS WORK SHALL BE PERFORMED IN ACCORDANCE WITH SECTION 649 AND AS SHOWN IN THE PLANS FOR GEOTEXTILE FOR SILT FENCE (PAY ITEM 649.51) OR GEOTEXTILE FOR SILT FENCE, WOVEN WIRE REINFORCED (PAY ITEM 649.515).

REVISIONS	
MARCH 21, 2008	WHF
DECEMBER 11, 2008	WHF
JANUARY 13, 2009	WHF

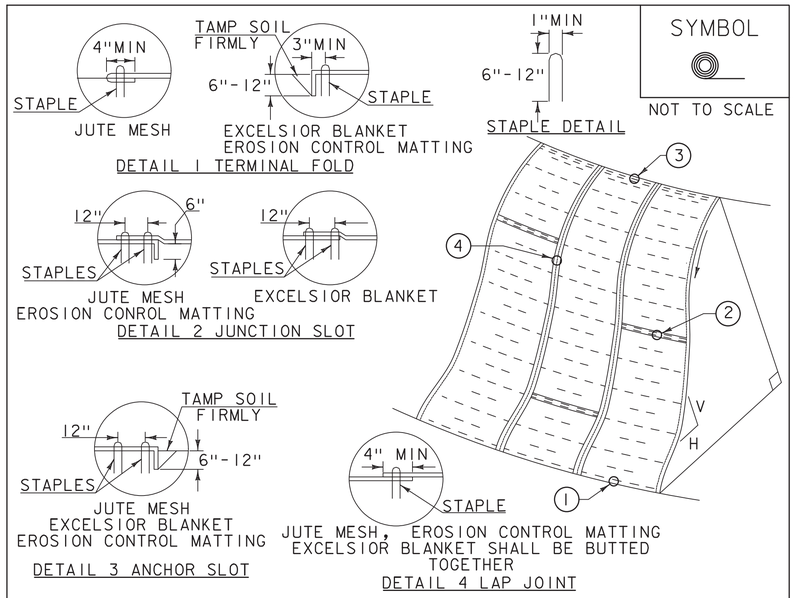

SYMBOL

NOT TO SCALE

CONSTRUCTION SPECIFICATIONS

1. APPLY TO SLOPES GREATER THAN 3H:1V OR WHERE NECESSARY TO AID IN ESTABLISHING VEGETATION.

2. APPLY FERTILIZER, LIME SEED PRIOR TO PLACING MATTING.

3. STAPLES ARE TO BE PLACED ALTERNATELY, IN COLUMNS APPROXIMATELY 2' APART AND IN ROWS APPROXIMATELY 3' APART. APPROXIMATELY 175 STAPLES ARE REQUIRED PER 4'X225' ROLL OF MATERIAL AND 125 STAPLES ARE REQUIRED PER 4'X150' ROLL OF MATERIAL.

4. DISTURBED AREAS SHALL BE SMOOTHLY GRADED. EROSION CONTROL MATERIAL SHALL BE PLACED LOOSELY OVER GROUND SURFACE. DO NOT STRETCH.

5. ALL TERMINAL ENDS AND TRANSVERSE LAPS SHALL BE STAPLED AT APPROXIMATELY 12" INTERVALS.

ADAPTED FROM DETAILS PROVIDED BY: NEW YORK STATE DEC
ORIGINALLY DEVELOPED BY USDA-NRCS
VERMONT DEPARTMENT OF ENVIRONMENTAL CONSERVATION

ROLLED EROSION CONTROL PRODUCT (RECP) SIDE SLOPE

NOTES:
REFER TO "THE VERMONT STANDARDS & SPECIFICATIONS FOR EROSION PREVENTION & SEDIMENT CONTROL -2006- " FROM THE VT AGENCY OF NATURAL RESOURCES FOR ADDITIONAL GUIDANCE.
THIS WORK SHALL BE PERFORMED IN ACCORDANCE WITH SECTION 653 AND AS SHOWN IN THE PLANS FOR TEMPORARY EROSION MATTING (PAY ITEM 653.20) OR PERMANENT EROSION MATTING (PAY ITEM 653.21).

REVISIONS	
APRIL 16, 2007	JMF
JANUARY 13, 2009	WHF

PROJECT NAME: ROCKINGHAM
PROJECT NUMBER: BRF 0126(12)

FILE NAME: z10j072bdr_erodet.dgn
PROJECT LEADER: R. HEBERT
DESIGNED BY: Const. Env. Section
EPSC DETAIL SHEET 1 OF 3

PLOT DATE: 7/28/2014
DRAWN BY: S. AMOROSO
CHECKED BY: D. BRYANT
SHEET 56 OF 69

SYMBOL

NOT TO SCALE

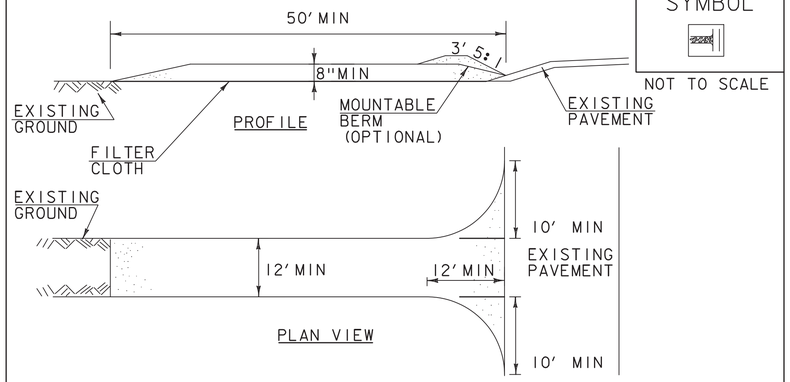

CONSTRUCTION SPECIFICATIONS

1. STONE SIZE- USE 1-4" STONE, RECLAIMED OR RECYCLED CONCRETE EQUIVALENT.
2. LENGTH- NOT LESS THAN 50' (EXCEPT ON A SINGLE RESIDENCE LOT WHERE A 30' MINIMUM LENGTH APPLIES).
3. THICKNESS- NOT LESS THAN 8".
4. WIDTH- 12' MINIMUM, BUT NOT LESS THAN THE FULL WIDTH AT POINTS WHERE INGRESS OR EGRESS OCCURS. 24' IF SINGLE ENTRANCE TO SITE.
5. GEOTEXTILE MUST BE PLACED OVER THE ENTIRE AREA PRIOR TO PLACING STONE.
6. SURFACE WATER- ALL SURFACE WATER FLOWING OR DIVERTED TOWARD CONSTRUCTION ENTRANCES SHALL BE PIPED BENEATH THE ENTRANCE. IF PIPING IS IMPRACTICAL, A MOUNTABLE BERM WITH 5:1 SLOPES WILL BE PERMITTED.
7. MAINTENANCE- THE ENTRANCE SHALL BE MAINTAINED IN A CONDITION WHICH WILL PREVENT TRACKING OR FLOWING OF SEDIMENT ONTO PUBLIC RIGHTS-OF-WAY, ALL SEDIMENT SPILLED, DROPPED, WASHED OR TRACKED ONTO PUBLIC RIGHTS-OF-WAY MUST BE REMOVED IMMEDIATELY.
8. WHEN WASHING IS REQUIRED, IT SHALL BE DONE ON AN AREA STABILIZED WITH STONE AND WHICH DRAINS INTO AN APPROVED SEDIMENT TRAPPING DEVICE.
9. PERIODIC INSPECTION AND NEEDED MAINTENANCE SHALL BE PROVIDED ACCORDING TO PERMIT REQUIREMENTS.

ADAPTED FROM DETAILS PROVIDED BY: NEW YORK STATE DEC
ORIGINALLY DEVELOPED BY USDA-NRCS
VERMONT DEPARTMENT OF ENVIRONMENTAL CONSERVATION

STABILIZED CONSTRUCTION ENTRANCE

NOTES:
REFER TO "THE VERMONT STANDARDS & SPECIFICATIONS FOR EROSION PREVENTION & SEDIMENT CONTROL -2006- "FROM THE VT AGENCY OF NATURAL RESOURCES FOR ADDITIONAL GUIDANCE.

THIS WORK SHALL BE PERFORMED IN ACCORDANCE WITH SECTION 653 FOR VEHICLE TRACKING PAD (PAY ITEM 653.35) OR AS SPECIFIED IN THE CONTRACT.

REVISIONS	
MARCH 24, 2008	WHF
JANUARY 13, 2009	WHF

SYMBOL

NOT TO SCALE

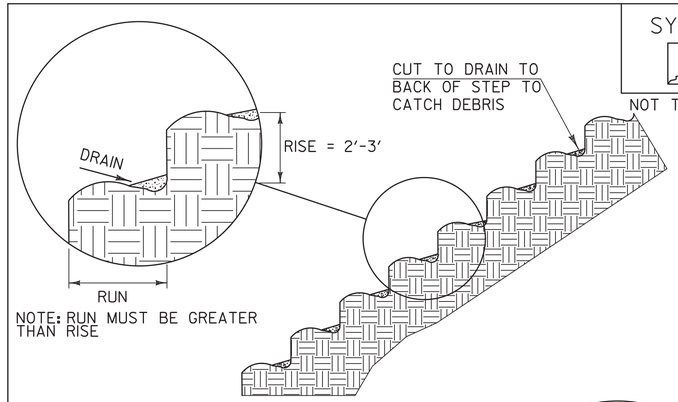

NOTE: RUN MUST BE GREATER THAN RISE

STAIR STEPPING CUT SLOPES

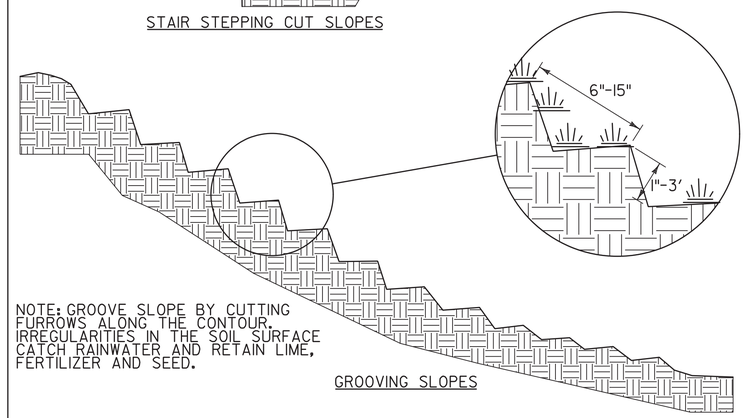

NOTE: GROOVE SLOPE BY CUTTING FURROWS ALONG THE CONTOUR. IRREGULARITIES IN THE SOIL SURFACE CATCH RAINWATER AND RETAIN LIME, FERTILIZER AND SEED.

GROOVING SLOPES

ADAPTED FROM DETAILS PROVIDED BY: NEW YORK STATE DEC
ORIGINALLY DEVELOPED BY USDA-NRCS
VERMONT DEPARTMENT OF ENVIRONMENTAL CONSERVATION

SURFACE ROUGHENING

NOTES:
REFER TO "THE VERMONT STANDARDS & SPECIFICATIONS FOR EROSION PREVENTION & SEDIMENT CONTROL -2006- "FROM THE VT AGENCY OF NATURAL RESOURCES FOR ADDITIONAL GUIDANCE.

THIS WORK SHALL BE CONSIDERED INCIDENTAL TO THE CONTRACT

REVISIONS	
APRIL 1, 2008	WHF
JANUARY 13, 2009	WHF

PROJECT NAME: ROCKINGHAM
PROJECT NUMBER: BRF 0126(12)

FILE NAME: z10J072bdr_erodet.dgn
PROJECT LEADER: R. HEBERT
DESIGNED BY: Const. Env. Section
EPSC DETAIL SHEET 2 OF 3

PLOT DATE: 7/28/2014
DRAWN BY: S. AMOROSO
CHECKED BY: D. BRYANT
SHEET 57 OF 69

VAOT RURAL AREA MIX					
	LBS/AC				
% WEIGHT	BROADCAST	HYDROSEED	NAME	GERM %	PURITY %
37.5%	22.5	45	CREEPING RED FESCUE	85%	98%
37.5%	22.5	45	TALL FESCUE	90%	95%
5.0%	3	6	RED TOP	90%	95%
15.0%	9	18	BIRDSFOOT TREFOIL	85%	98%
5.0%	3	6	ANNUAL RYE GRASS	85%	95%
100%	60	120			

VAOT URBAN AREA MIX					
	LBS/AC				
% WEIGHT	BROADCAST	HYDROSEED	NAME	GERM %	PURITY %
42.5%	34	68	CREEPING RED FESCUE	85%	98%
10.0%	8	16	PERENNIAL RYE GRASS	90%	95%
42.5%	34	68	KENTUCKY BLUE GRASS	85%	85%
5.0%	4	8	ANNUAL RYE GRASS	85%	95%
100%	80	160			

SOIL AMENDMENT GUIDANCE			
FERTILIZER		LIME	
BROADCAST	HYDROSEED	BROADCAST	HYDROSEED
10-20-10	*FOLLOW*	PELLETIZED	*FOLLOW*
500 LBS/AC	*MANUFACTURER*	2 TONS/AC	*MANUFACTURER*

CONSTRUCTION GUIDANCE

1. RURAL SEED MIX: USE AS INDICATED IN THE PLANS AND/OR FOR ALL ESTABLISHED UPLAND (NON WETLAND) AREAS DISTURBED BY THE CONTRACTOR.
2. URBAN SEED MIX: USE AS INDICATED IN THE PLANS AND/OR FOR ALL ESTABLISHED LAWN AREAS DISTURBED BY THE CONTRACTOR.
3. ALL SEED MIXTURES: SHALL NOT HAVE A WEED CONTENT EXCEEDING 0.40% BY WEIGHT AND SHALL BE FREE OF ALL NOXIOUS SEED.
4. FERTILIZER AND LIMESTONE: SHALL FOLLOW RATES SHOWN ON PLAN OR AS DIRECTED BY THE ENGINEER
5. HAY MULCH: TO BE PLACED ON EARTH SLOPES AT THE RATE OF 2 TONS/ACRE, ACHIEVE 90% GROUND COVER OR AS DIRECTED BY THE ENGINEER.
6. TOPSOIL: TO BE USED WITH SEED AS INDICATED ON THE PLANS, OR AS DIRECTED BY THE ENGINEER.
7. HYDROSEEDING: ALTHOUGH GUIDANCE IS GIVEN ABOVE THE SITE CONDITIONS AND THE TYPE OF HYDROSEED WILL ULTIMATELY DICTATE THE AMOUNTS AND TYPES OF SOIL AMENDMENTS TO BE APPLIED
8. TURF ESTABLISHMENT: PLACING SEED, FERTILIZER, LIME AND MULCH PRIOR TO SEPTEMBER 15 AND AFTER APRIL 15 CAN BETTER ENSURE A VIGOROUS GROWTH OF GRASS.

ADAPTED FROM VTRANS TECHNICAL LANDSCAPE MANUAL FOR ROADWAYS AND TRANSPORTATION FACILITIES

TURF ESTABLISHMENT

REVISIONS	
JUNE 23, 2009	WHF
JANUARY 15, 2010	WHF
FEBRUARY 16, 2011	WHF

PROJECT NAME: ROCKINGHAM
PROJECT NUMBER: BRF 0126(12)

FILE NAME: z10J072bdr_erodet.dgn
PROJECT LEADER: R. HEBERT
DESIGNED BY: Const. Env. Section
EPSC DETAIL SHEET 3 OF 3

PLOT DATE: 7/28/2014
DRAWN BY:
CHECKED BY:
SHEET 58 OF 69

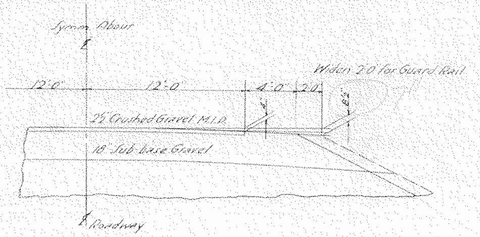

NEW HIGHWAY SECT. STA. TO STA.

SCALE

See Plan & Profile Sheet

NEW HIGHWAY PROFILE ALONG ℄

SCALE

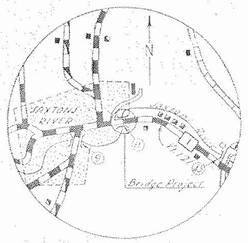

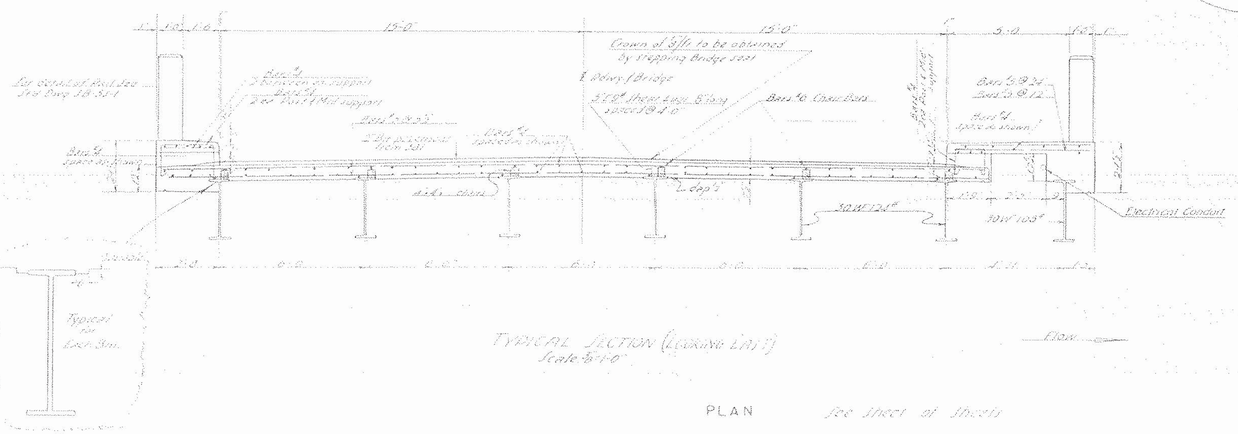

TYPICAL SECTION (LOOKING LAST)
Scale ⅜"=1'-0"

PLAN See Sheet of Sheets

SCALE

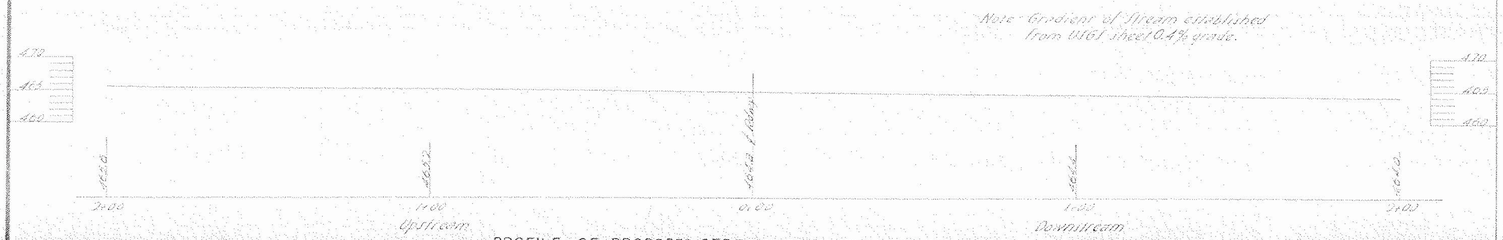

PROFILE OF PROPOSED STREAM CHANNEL

SCALE

Highway No. VT. 121 Name of Highway

Structure No. 11 County WINDHAM Town ROCKINGHAM

Approved _____ Date _____

Bridge Engineer, Dist No. 9

EXISTING STRUCTURE

1. Posted loading of existing structure 20,000 lbs.
2. Location and type of existing structure 1.66 Miles from Westminster Town Line - Steel Truss
3. Underclearance elevation of existing structure 25'-0"
4. What disposition should be made of the existing structure and probable cost of removal $400
5. Should existing structure be utilized to maintain traffic during construction of new structure No
6. Should new temporary structure be built Yes
7. Ordinary high water surface elevation of existing structure 479.0±
8. Extreme high water of existing structure 489.0±
9. Span and waterway area below ordinary high water surface elevation of existing structure or structures up or down stream Up Str. 3 spans @ 50'-0" = 1650# Dwn Str. Single span 100' = 2100#
10. Type of foundation under existing abutments Gravel with Clay Filler - Nearly Hardpan
11. If existing structure is to be widened or extended, attach sketch containing complete data to prepare plans for widening or extending and to determine safe loading capacity, substructure, and superstructure No

NEW STRUCTURE

1. Recommended type of structure Standard WF Beam Bridge Continuous
2. Recommended clear span or spans
   Measured parallel to ℄ new highway 52'-1½", 65'-6½", 52'-1½"
   Measured at right angles to ℄ stream 45'-1½", 56'-9", 45'-1½"
3. Are there objections to a pier in the stream, answer yes or no No
4. Ordinary high water elevation at new structure 479.0±
5. Ordinary elevation of water at new structure 467.5±
6. Extreme high water elevation at new structure 489.0±
7. Does stream reach its maximum high water elevation rapidly No Is ordinary rise rapid No
8. Low water elevation at new structure 465.0±
9. Drainage area in acres above structure 45,440 Character of terrain Hilly
10. Is stream ever dry No
11. Velocity of stream at high water stage 6 ft/sec.
12. Recommended waterway area below ordinary high water elevation, measured at ⅓ to ℄ of stream
13. Does erosion occur No
14. Does stream carry light, medium or heavy drift and ice Light
15. Should roadway be banked? If so how much per foot No
16. Are sidewalks required? If so, on what side Downstream Both sides? No
17. Recommended type of pavement Reinforced Conc. Slab with Bituminous Surface
18. Traffic to be maintained under what item no. 2441 One or two ways? One Probable cost $5000.00
19. Probable cost of clearing and grubbing stream channel at structure site ——
20. Should provisions be made for public utilities Yes
21. Estimated allowable load on foundations 4 ton Should piles be used? No Est. lgth.

FOUNDATION INFORMATION

Obtained for design purposes only and State assumes no responsibility whatsoever for sufficiency or accuracy of the information shown. Boulders may be encountered at either Abutment location.

See Sheet 7 of 49 Sheets for Boring Information

STATE OF VERMONT

DEPT. OF HIGHWAYS

RECOMMENDED FOR APPROVAL

APPROVED

Commissioner
Public Roads Administration
Federal Works Agency

FOR REFERENCE ONLY

CORRECT	APPROVED	ROCKINGHAM S156(3)
BRIDGE ENGINEER	CHIEF ENGINEER	Sheet 6 of 49

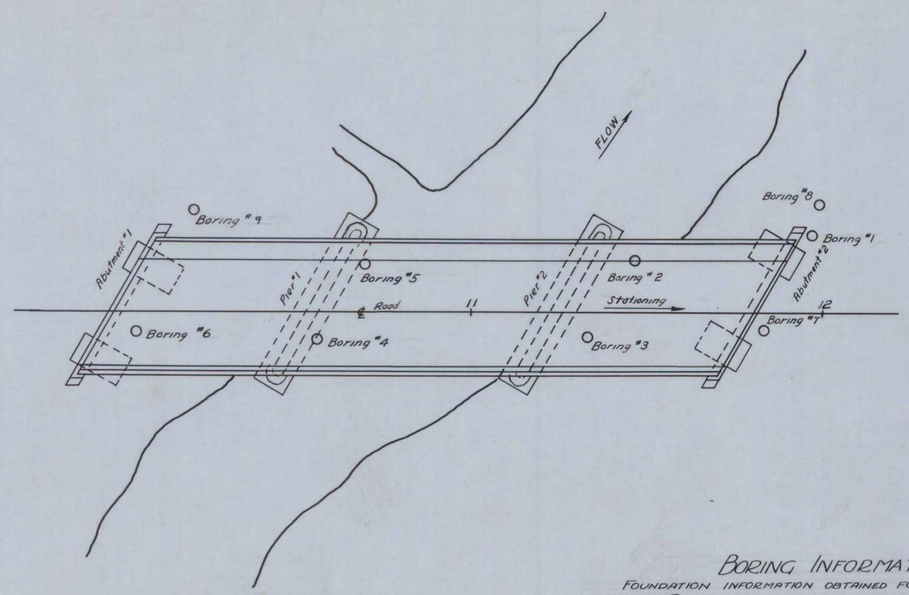

BORING INFORMATION

FOUNDATION INFORMATION OBTAINED FOR DESIGN PURPOSES ONLY, AND THE STATE ASSUMES NO RESPONSIBILITY WHATSOEVER FOR THE SUFFICIENCY OR ACCURACY OF THE INFORMATION SHOWN. BOULDERS MAY BE ENCOUNTERED AT ANY PIER OR ABUTMENT LOCATION.

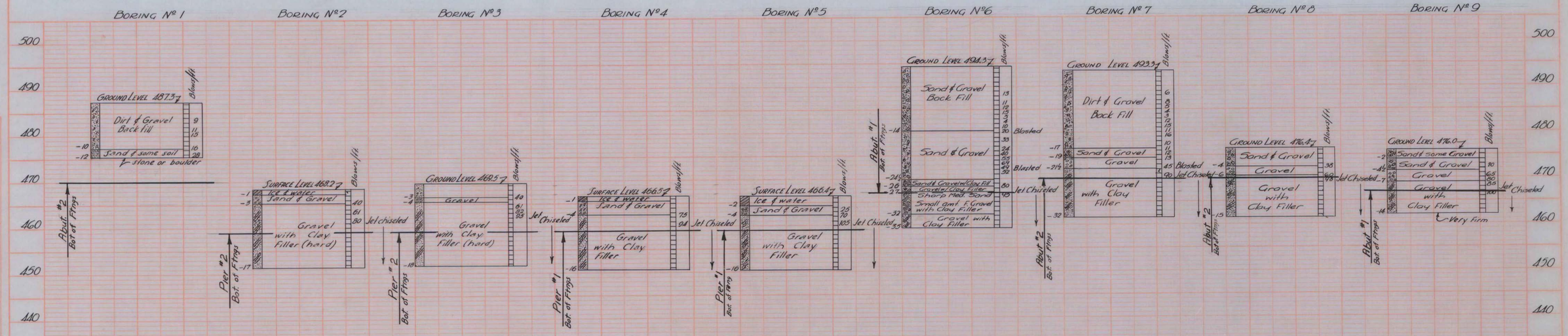

OUTSIDE DIAMETER OF PIPE CASING	=	2½"
THICKNESS OF SHELL	=	⅜"
WEIGHT OF HAMMER	=	350#
DROP OF HAMMER	=	24"

ROCKINGHAM
5-156 (3)

Sheet 7 of 49 Sheets

FOR REFERENCE ONLY

SHEET 60 OF 69

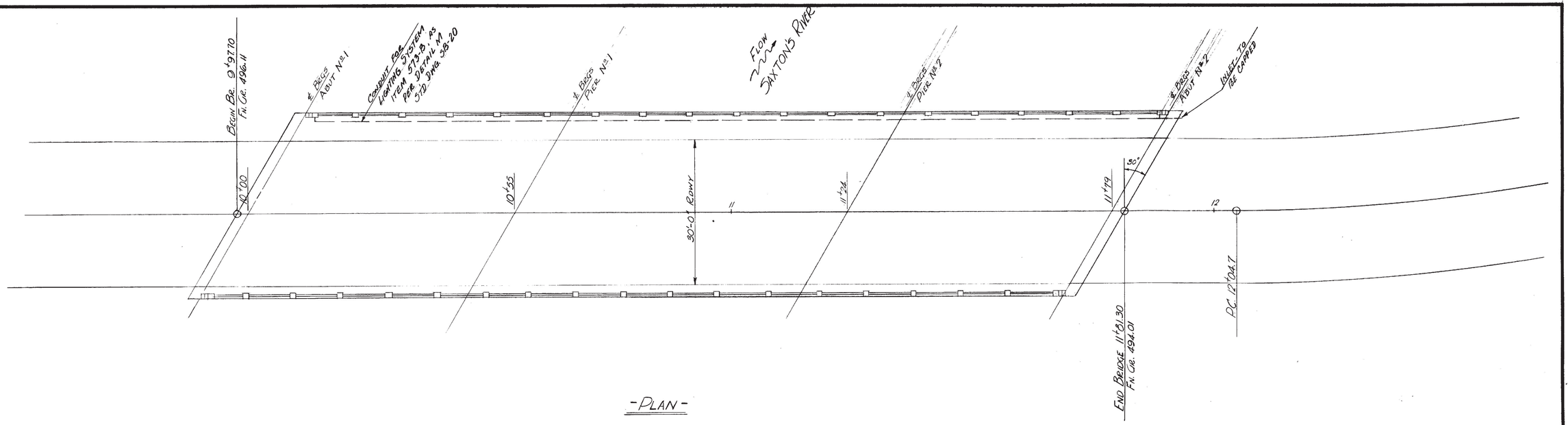

-PLAN-

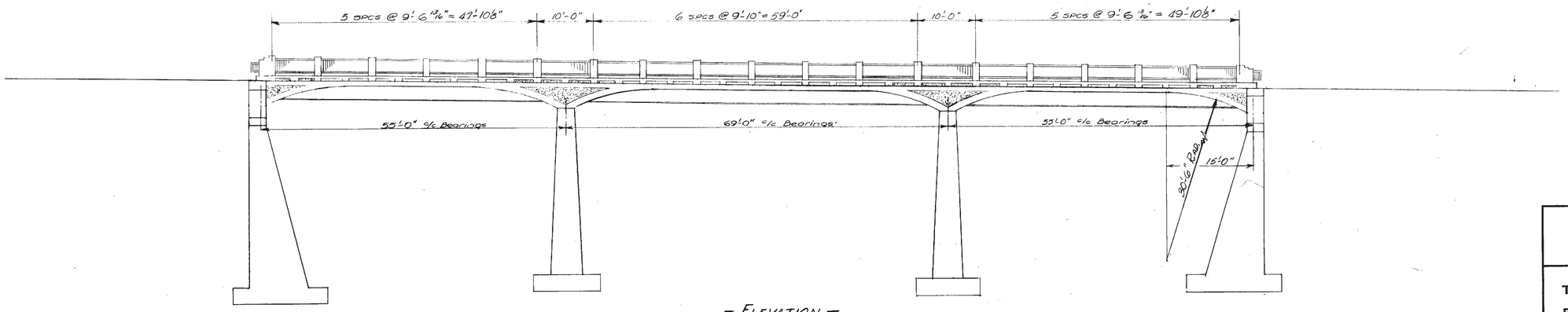

-ELEVATION-

FOR REFERENCE ONLY

STATE OF VERMONT
DEPARTMENT OF HIGHWAYS

TOWN OF ROCKINGHAM
ROAD NO. VT 121 BRIDGE NO. 11
BRIDGE PLAN & ELEVATION

SCALE 1"=10'-0"
SURVEYED BY POGAR
DRAWN BY JRJ CHECKED BY E.E.P.
PROJECT NO. 5156(3)
SHEET 8 OF 49

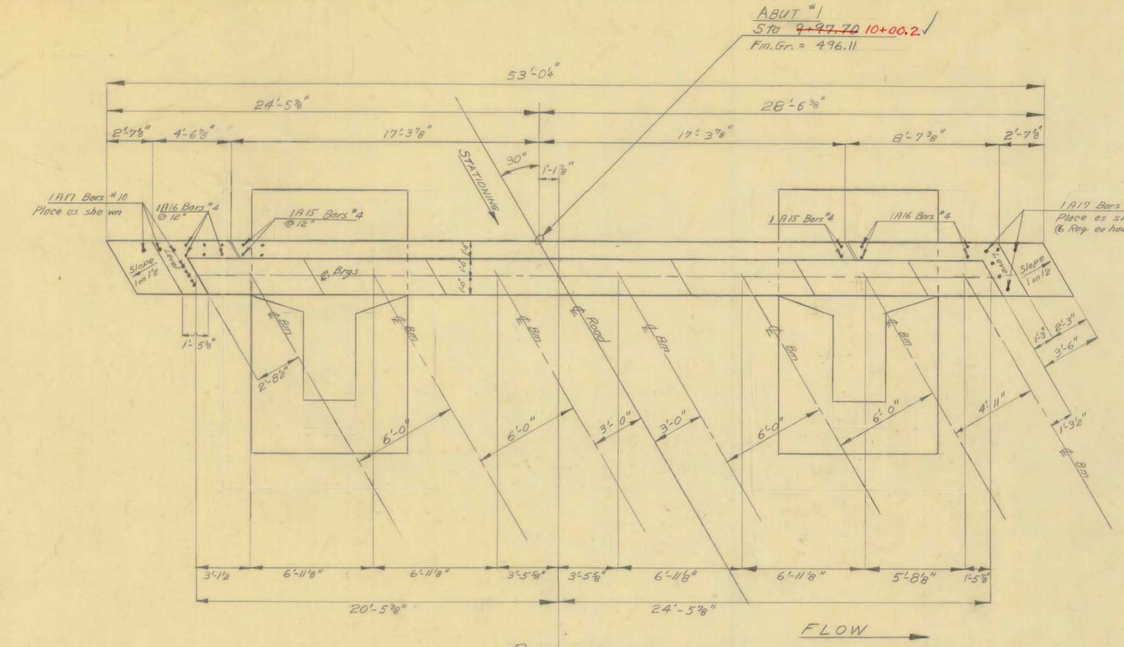

PLAN

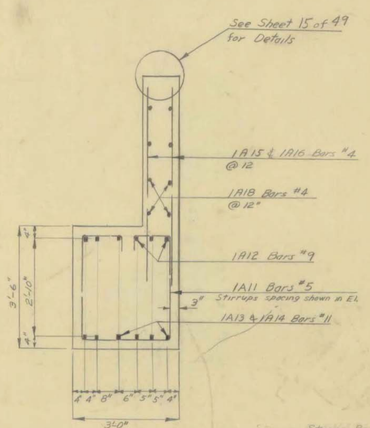

SECTION B-B
Scale ½"=1'-0"

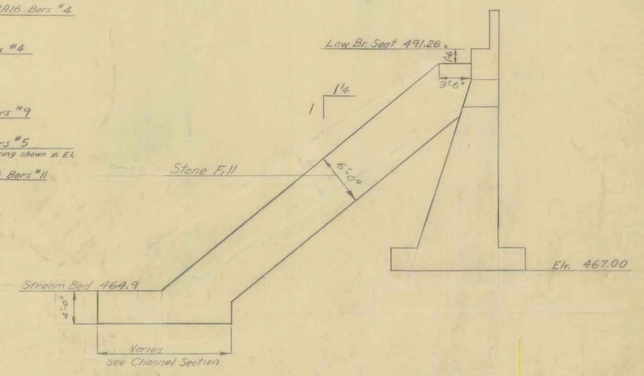

TYPICAL SECTION
Scale ⅛"=1'-0"

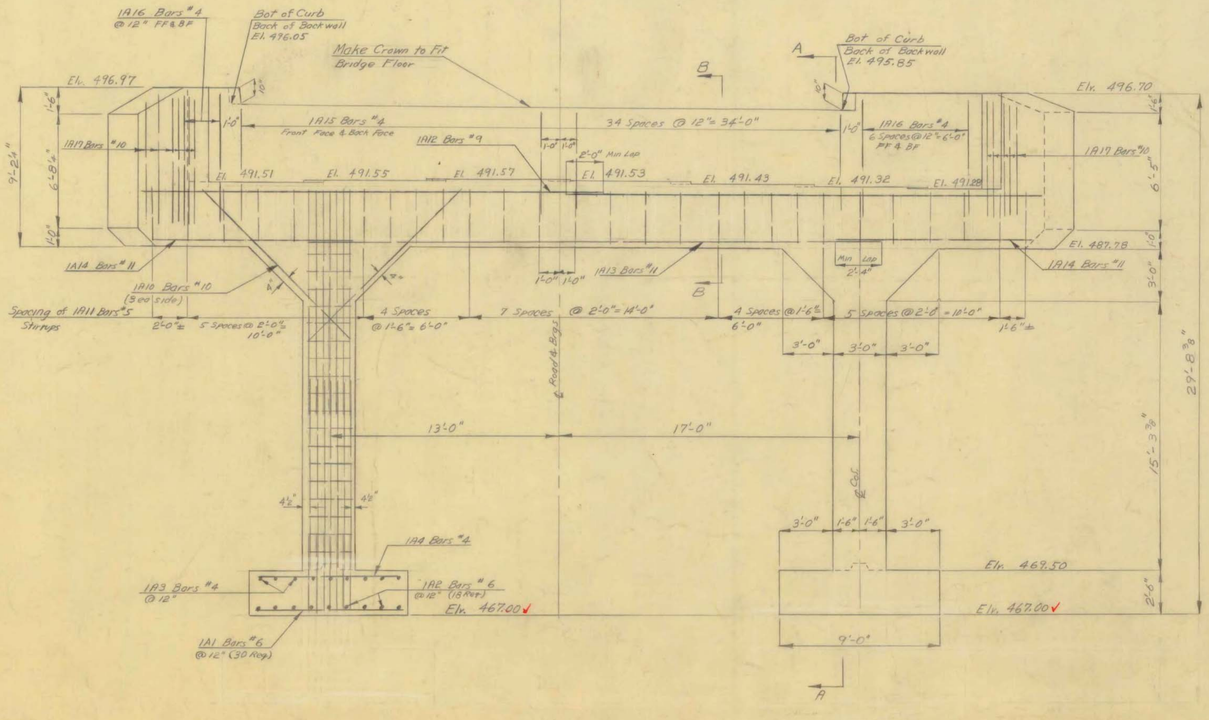

ELEVATION

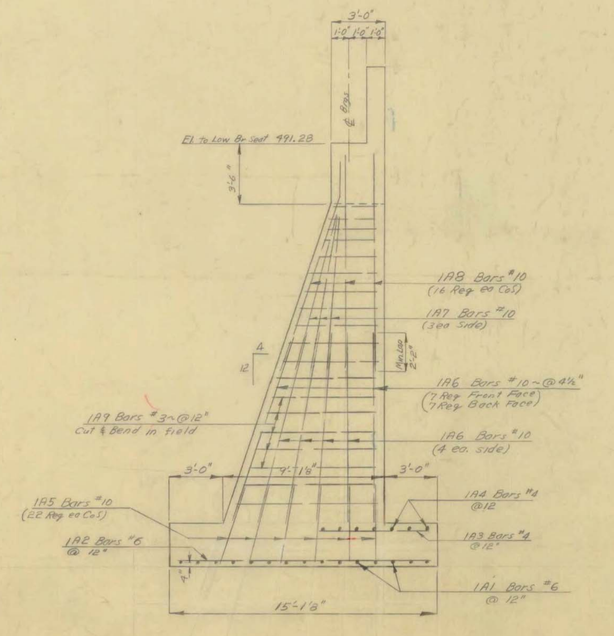

SECTION A-A

Note: All Laps 2'-0" except as noted.
Max. Foundation Pressure = 3.7 kips per sq. ft.

ESTIMATED QUANTITIES			
106C	Unclassified Channel Excavation	1,700	C.Y.
107	Structure Excavation	275	C.Y.
401B	Concrete Class B	86	C.Y.
521	Stone Fill	1,200	C.Y.

STATE OF VERMONT
DEPARTMENT OF HIGHWAYS

TOWN OF ROCKINGHAM
ROAD NO. Vt 121 BRIDGE NO. 11
DETAILS of ABUTMENT #1

SCALE ¼"=1'-0" or as noted
SURVEYED BY Pagar
DRAWN BY C.F.H. CHECKED BY Des. W.H.
PROJECT NO. S 156 (3)
SHEET 9 OF 49

FOR REFERENCE ONLY

STA. ~~10+55.0~~ 10+57.5 PIER 1 FN. GR. EL. 495.46 — EXPANSION JOINT
STA. ~~11+24.0~~ 11+26.5 PIER 2 FN. GR. EL. 494.67 — FIXED

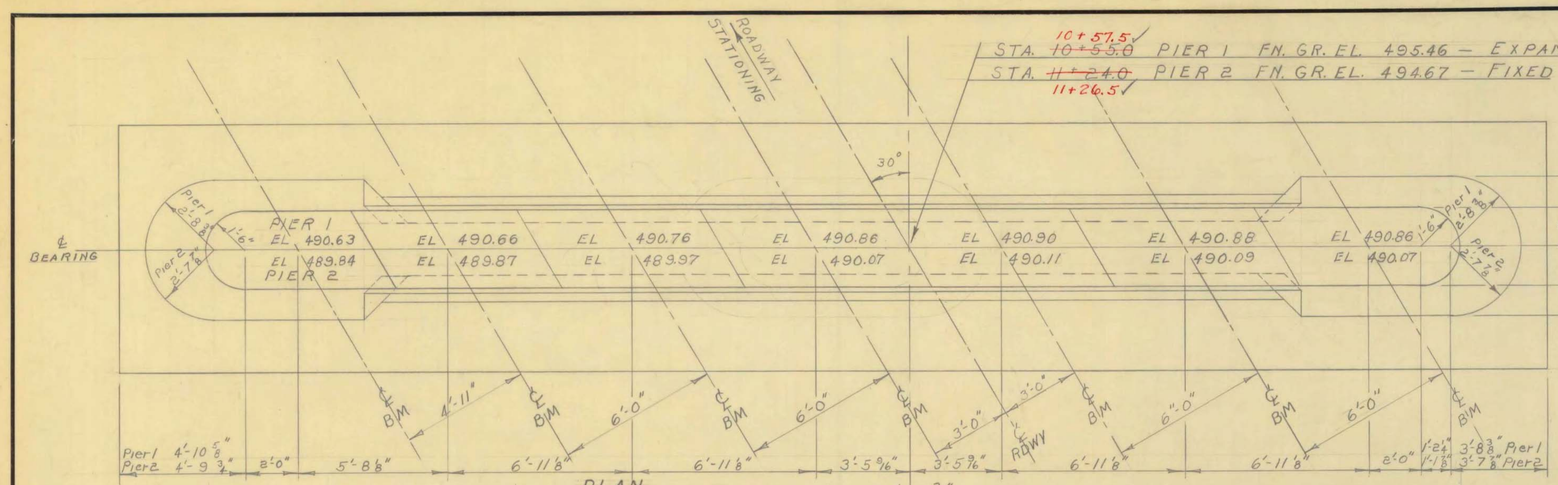

PLAN

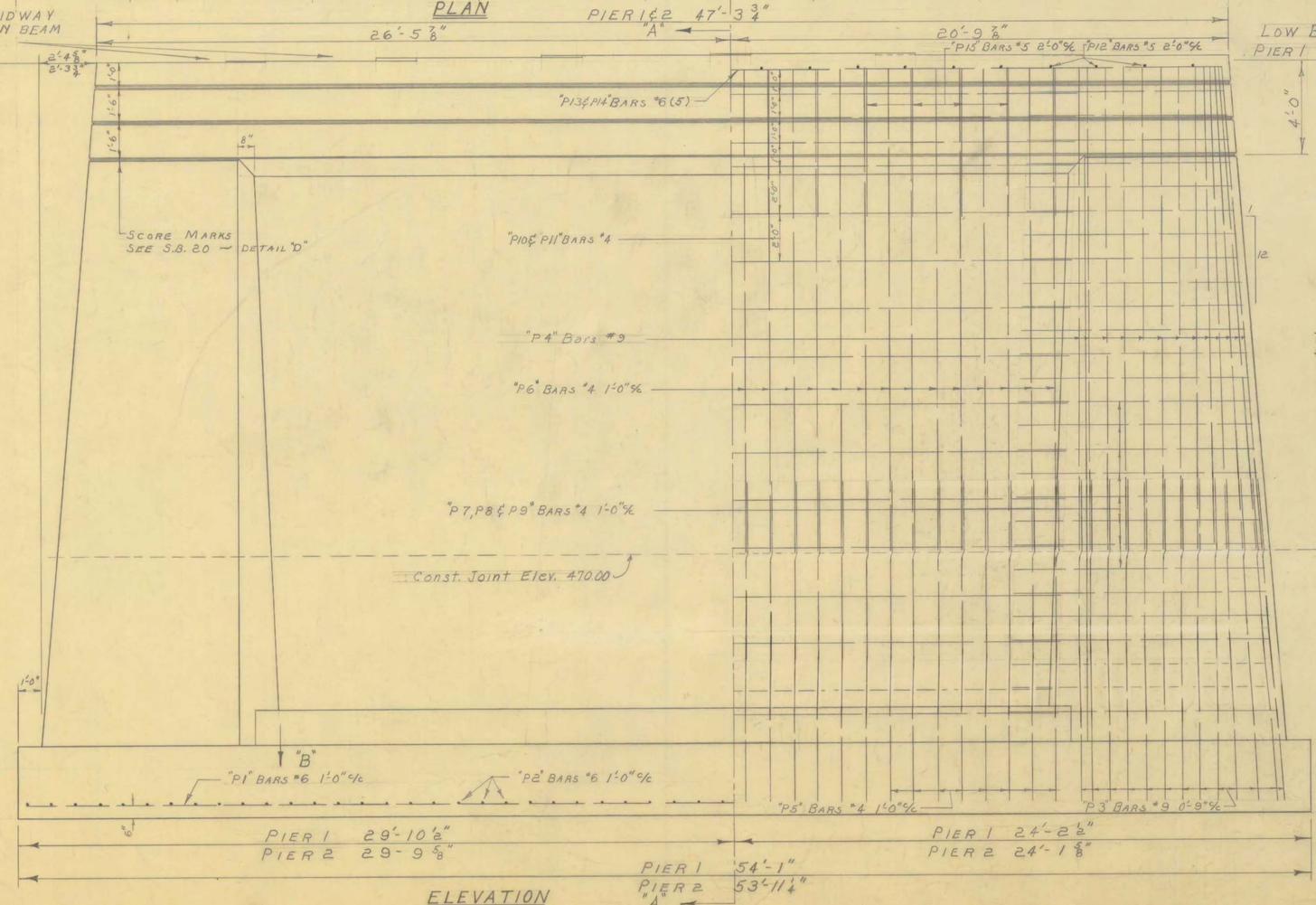

ELEVATION

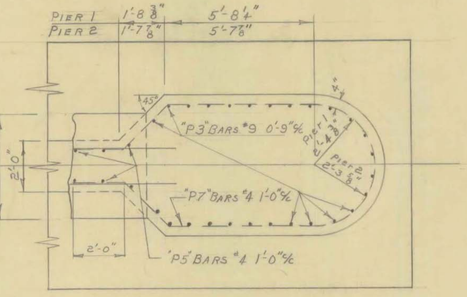

SECTION "B-B"

FLOW

LOW BRIDGE SEAT ELEV.
PIER 1 490.63 PIER 2 489.84

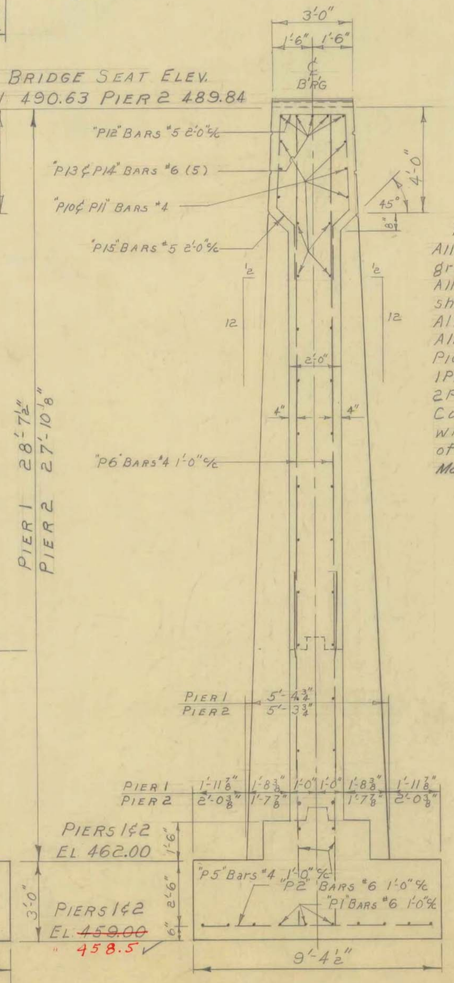

SECTION "A-A"

NOTES
All reinforcing Steel to be Intermediate grade
All reinforcing Steel dimensions on this sheet to ℄ of bars
All Concrete to be Class "B"
All Concrete edges to be chamfered 3/4"
Pier 1 drawn here. Pier 2 Similar
1P1 denotes reinforcing steel bar in Pier 1
2P1 denotes reinforcing steel bar in Pier 2
Construction Joints to be in accordance with Det. "D" Dwg. S.B. 20 under direction of the Engineer
Max. Foundation Pressure - 4.8 kips per sq. ft.

ESTIMATED QUANTITIES		PIER 1	PIER 2
107	Structure Excavation	140 c.y.	152 c.y.
401B	Concrete Class "B"	205 c.y.	200 c.y.

STATE OF VERMONT
DEPARTMENT OF HIGHWAYS

TOWN OF ROCKINGHAM
ROAD NO. VT 121 BRIDGE NO. 11
DETAILS PIER 1
PIER 2 SIMILAR
SCALE 3/8" = 1'
SURVEYED BY POGAR
DRAWN BY WMS CHECKED BY E.F.P.
PROJECT NO. S 156(3)
SHEET 10 OF 49

Rev. to show Construction Joint at 470.0 10/30/53 SMB.

FOR REFERENCE ONLY

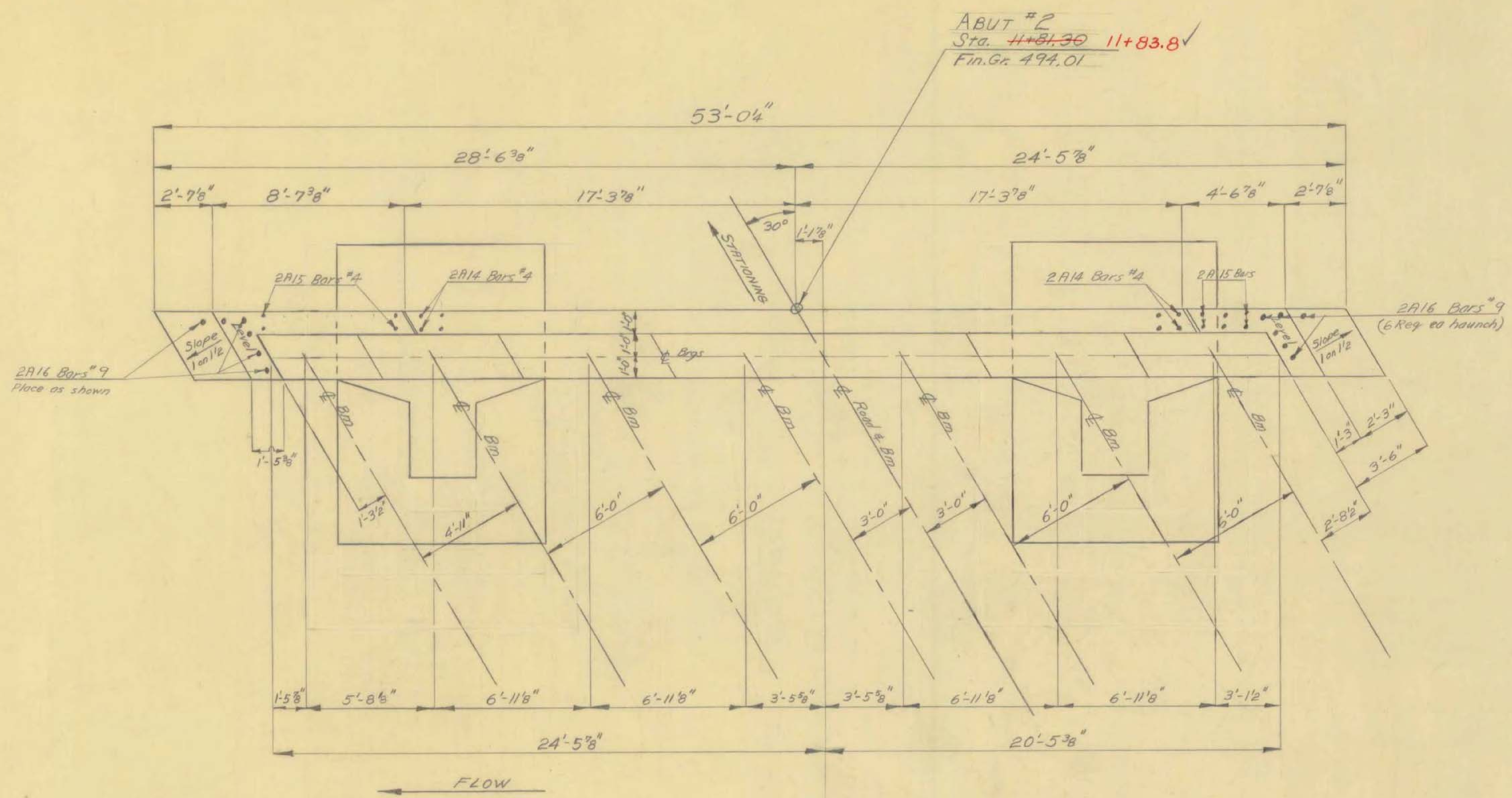

PLAN

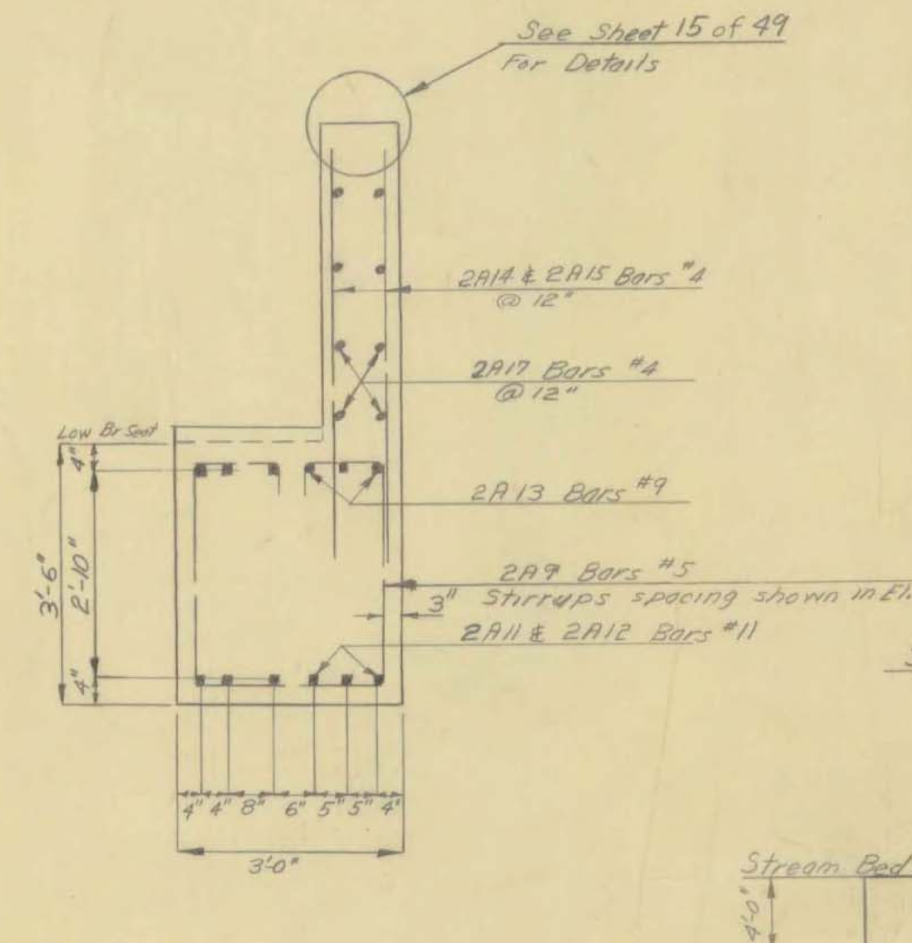

SECTION B-B
Scale ½" = 1'-0"

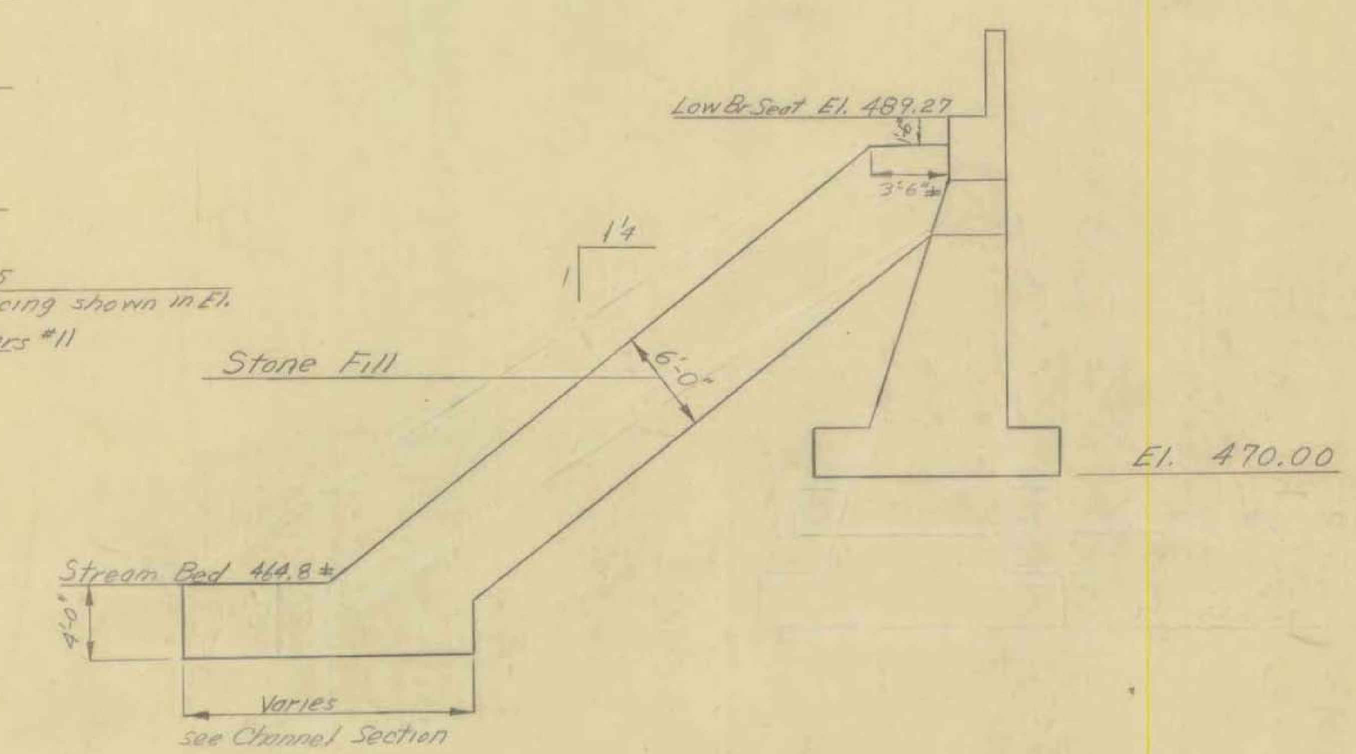

TYPICAL SECTION
Scale ⅛" = 1'-0"

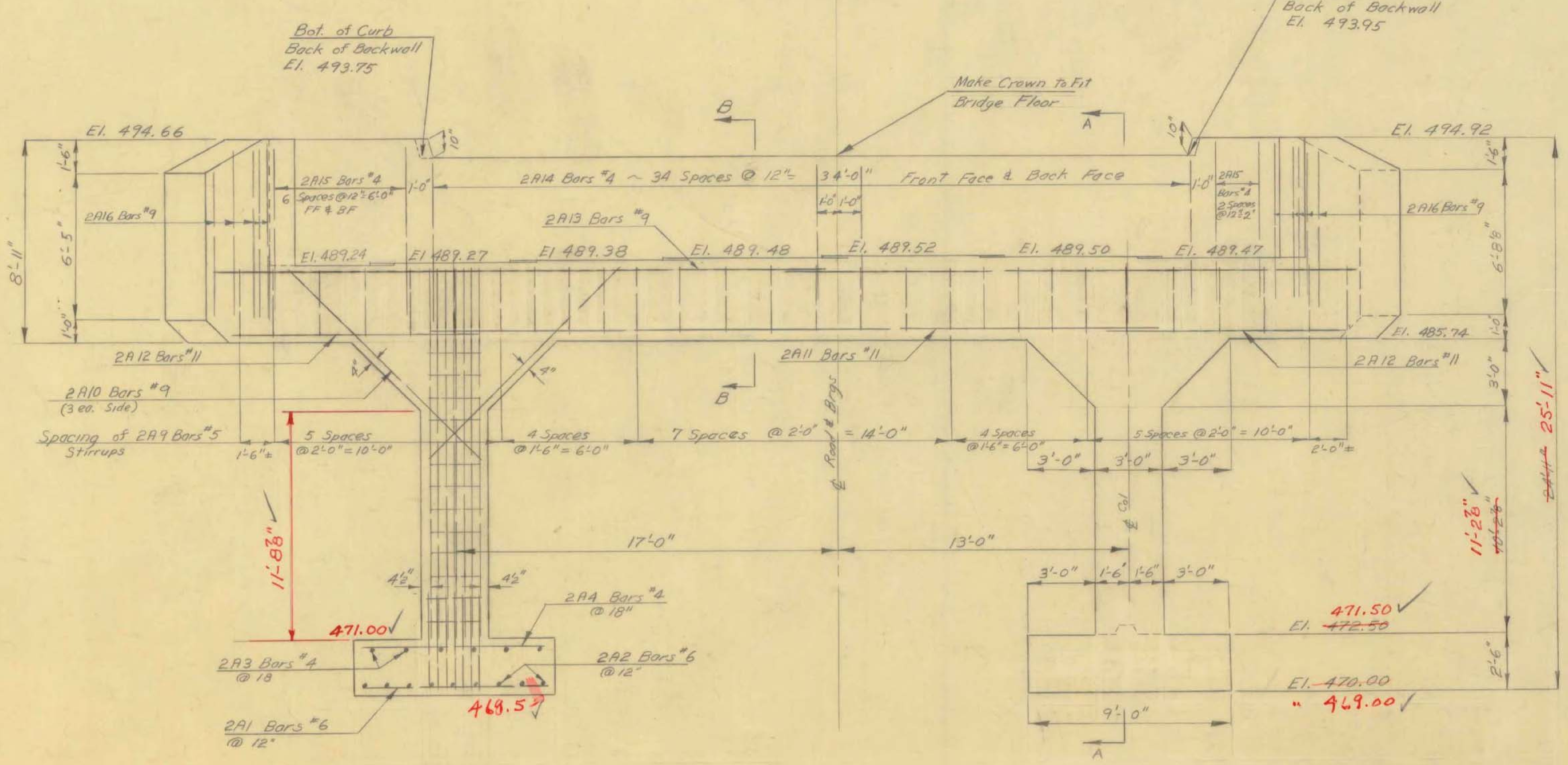

ELEVATION

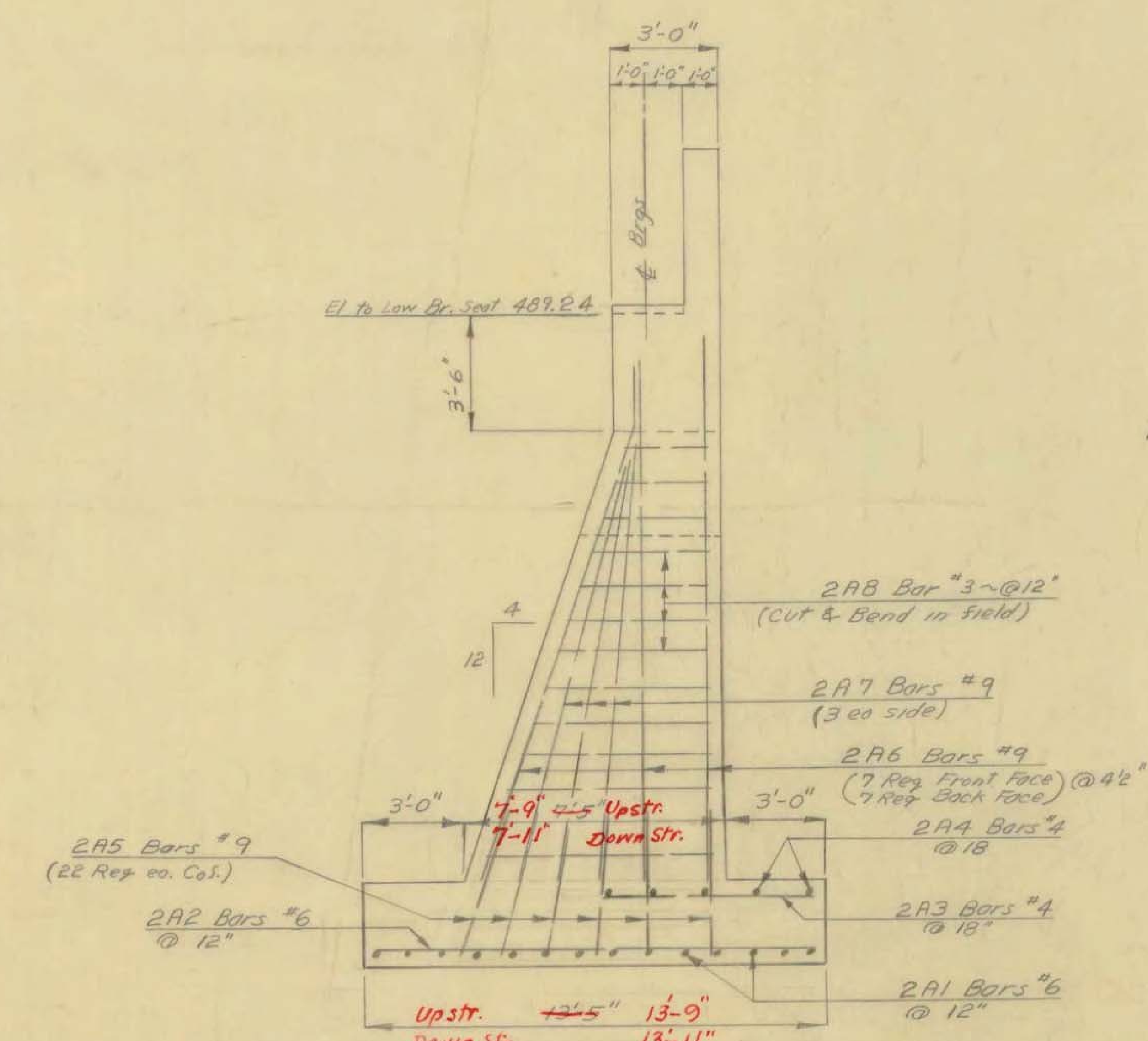

SECTION A-A

Max. Foundation Pressure - 3.7 kips per sq. ft.

ESTIMATED QUANTITIES			
106-C	Unclassified Channel Excavation	715	C.Y.
107	Structure Excavation	196	C.Y.
401B	Concrete Class B	75	C.Y.
521	Stone Fill	1050	C.Y.

FOR REFERENCE ONLY

STATE OF VERMONT
DEPARTMENT OF HIGHWAYS

TOWN OF ROCKINGHAM
ROAD NO. Vt 121 BRIDGE NO. 11
DETAILS of ABUTMENT #2

SCALE ¼" = 1'-0" or as noted
SURVEYED BY Pogar
DRAWN BY C.F.H. CHECKED BY Quant Des. JLH
PROJECT NO. S-156 (3)
SHEET 11 OF 49

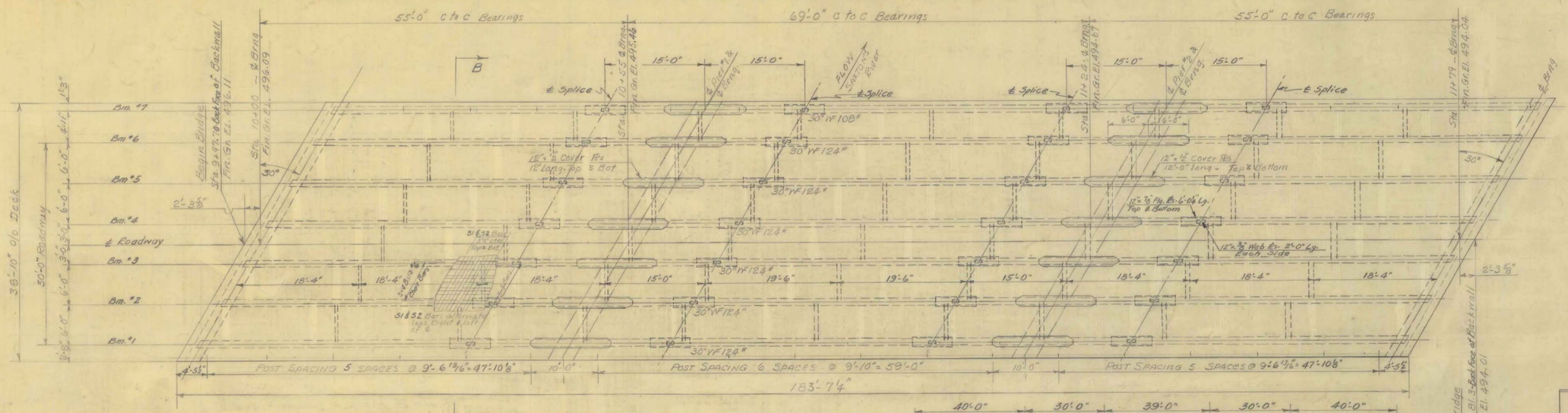

PLAN
Scale ⅛" = 1'-0"

CAMBER DIAGRAM

Beams shall have true circular camber with middle ordinate as shown above. No change in the above camber will be allowed, except by written order of the Engineer.

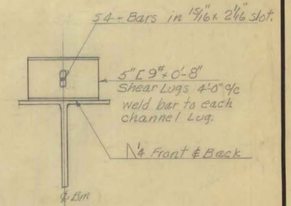

SHEAR LUG DETAILS

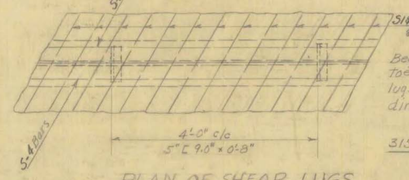

315 Lugs Req.

PLAN OF SHEAR LUGS
Scale ¾" = 1'-0"

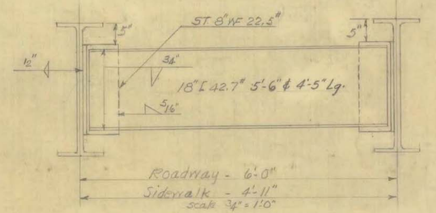

DIAPHRAGM DETAIL
(Span 1 x 3-18'-4" Spacing)
(Span 2-15'-0" & 19'-6" Spacing) As shown.

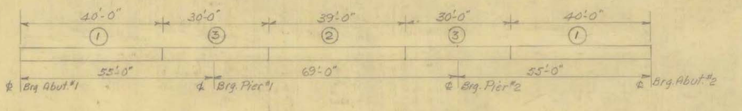

POURING SCHEDULE

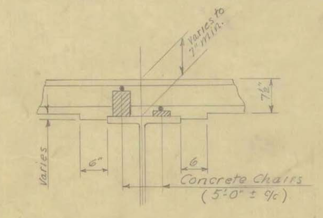

TYPICAL DETAIL INTERIOR WITHOUT COVER PLS.
Scale ¾" = 1'-0"

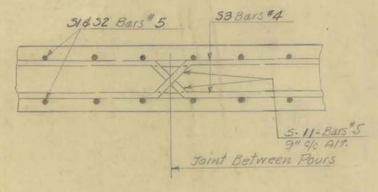

TYPICAL LONGIT. SECT. & POUR JOINTS

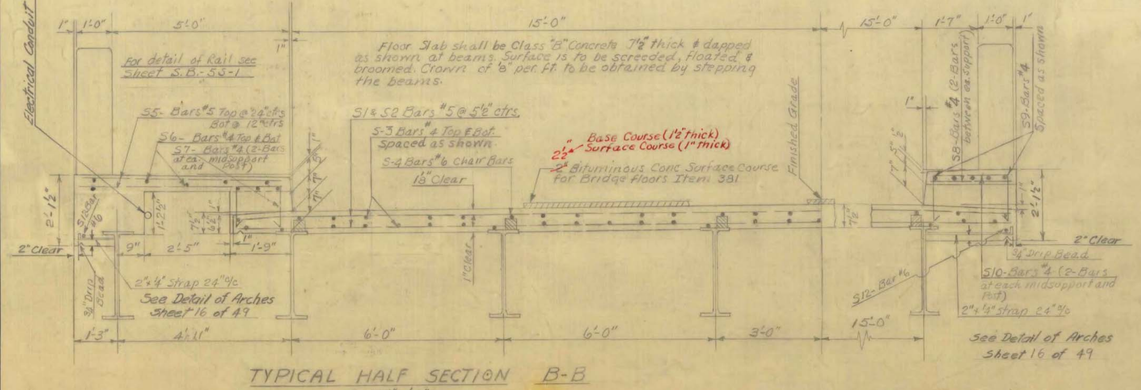

TYPICAL HALF SECTION B-B
Scale ½" = 1'-0"

Rev. 7/30/53 Amt3.
Cambers revised to conform with Min. Camber likely to remain permanent.

Estimated Quantities on this sheet for Structural Steel include Bearing Devices, Cover Plates and all structural Steel on Expansion Plate Detail Sheet 16 of 49
Does not include Bridge Railing Steel.

NOTE: All material and construction shall conform to the State of Vermont, Dept. of Highways, Std. Spec. for Road & Bridge Construction, Dated November 1948 and the A.A.S.H.O. Spec. for 1949. Designed for H-20(44) Live Loading, 25#/□' Paving Allowance; Dead Load includes weight of Beams, Slab & Rail.

FOR REFERENCE ONLY

ESTIMATED QUANTITIES

Bituminous Conc. Pavement	68 Tons
Concrete Class "B"	224 C.Y.
Structural Steel	210,196 Lbs.
Asphaltic Asbestos Coating	42 S.Y.
Bridge Railing	364 L.F.

STATE OF VERMONT
DEPARTMENT OF HIGHWAYS

TOWN OF Rockingham
ROAD No. VT. 121 BRIDGE NO. 11
SUPERSTRUCTURE DETAILS

SCALE as shown
SURVEYED BY PGAR
DRAWN BY D.W.P. CHECKED BY E.F.P. JLH
PROJECT No. S-156 (3)
SHEET 12 OF 49

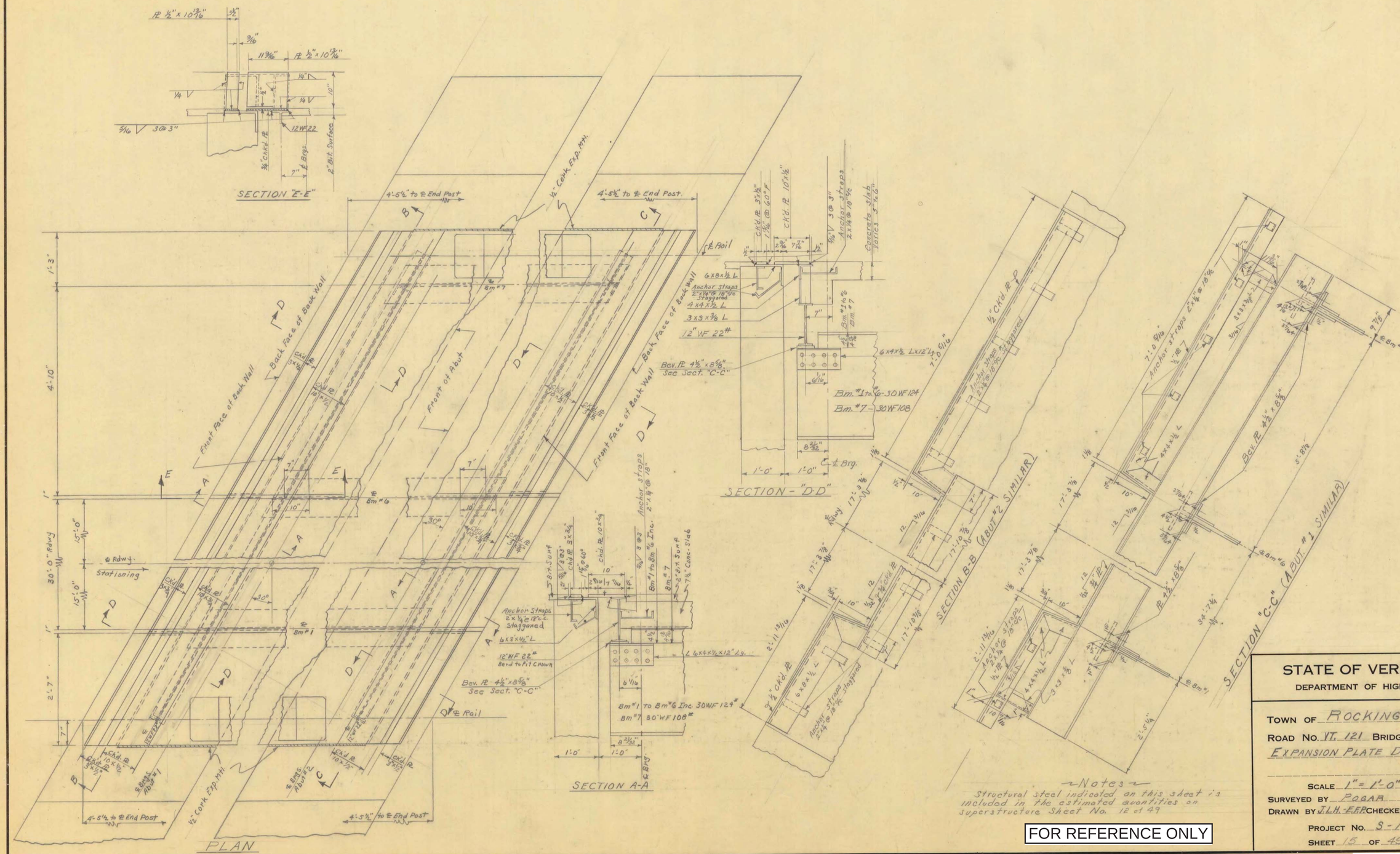

~Notes~

Structural steel indicated on this sheet is included in the estimated quantities on superstructure Sheet No. 12 of 49

FOR REFERENCE ONLY

STATE OF VERMONT
DEPARTMENT OF HIGHWAYS

TOWN OF ROCKINGHAM
ROAD NO. VT. 121 BRIDGE NO. 11
EXPANSION PLATE DETAILS

SCALE 1" = 1'-0"
SURVEYED BY POGAR
DRAWN BY J.L.H. E.F.P. CHECKED BY R.T.B.
PROJECT NO. S-156 (3)
SHEET 15 OF 49

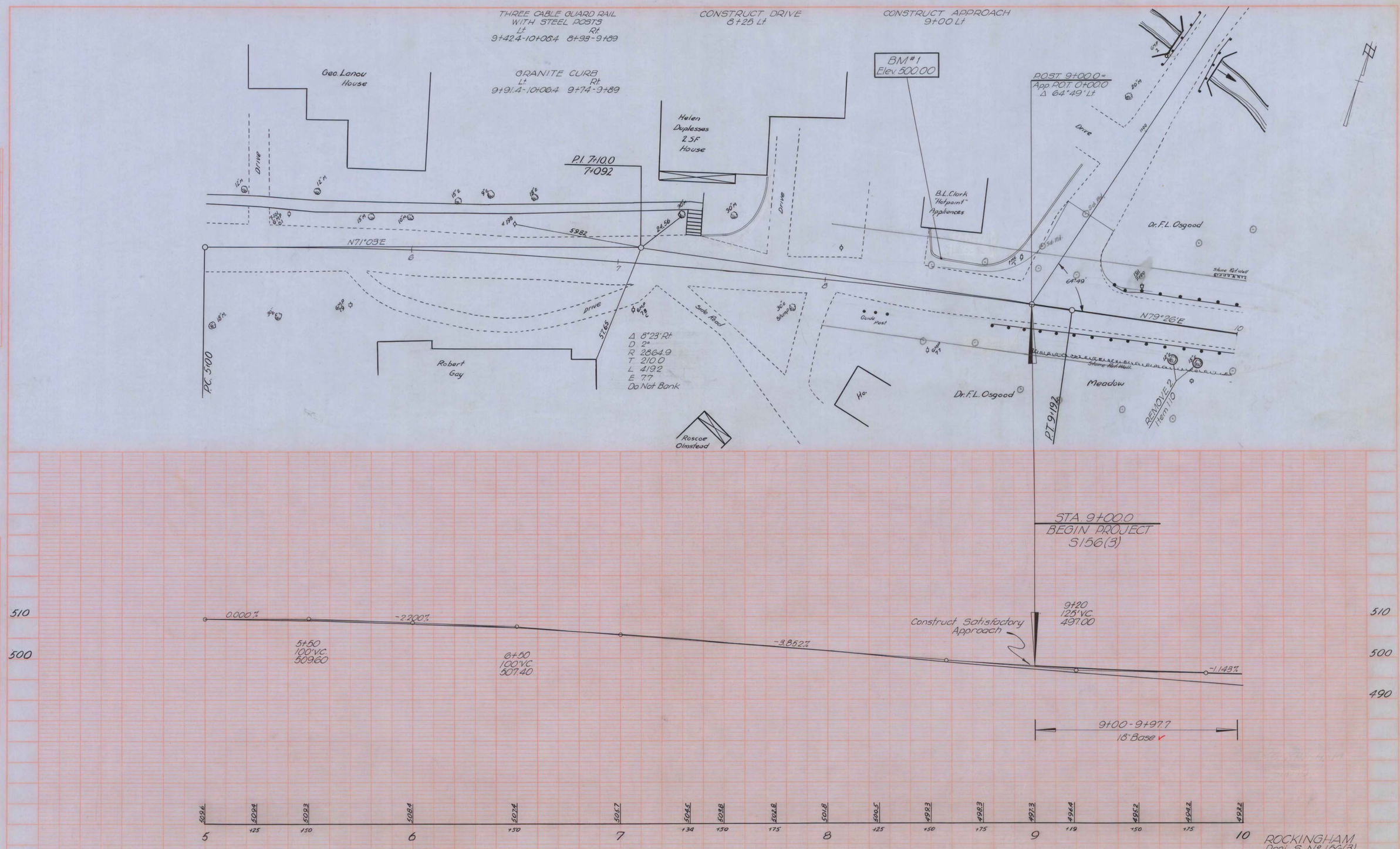

FOR REFERENCE ONLY

SHEET 67 OF 69

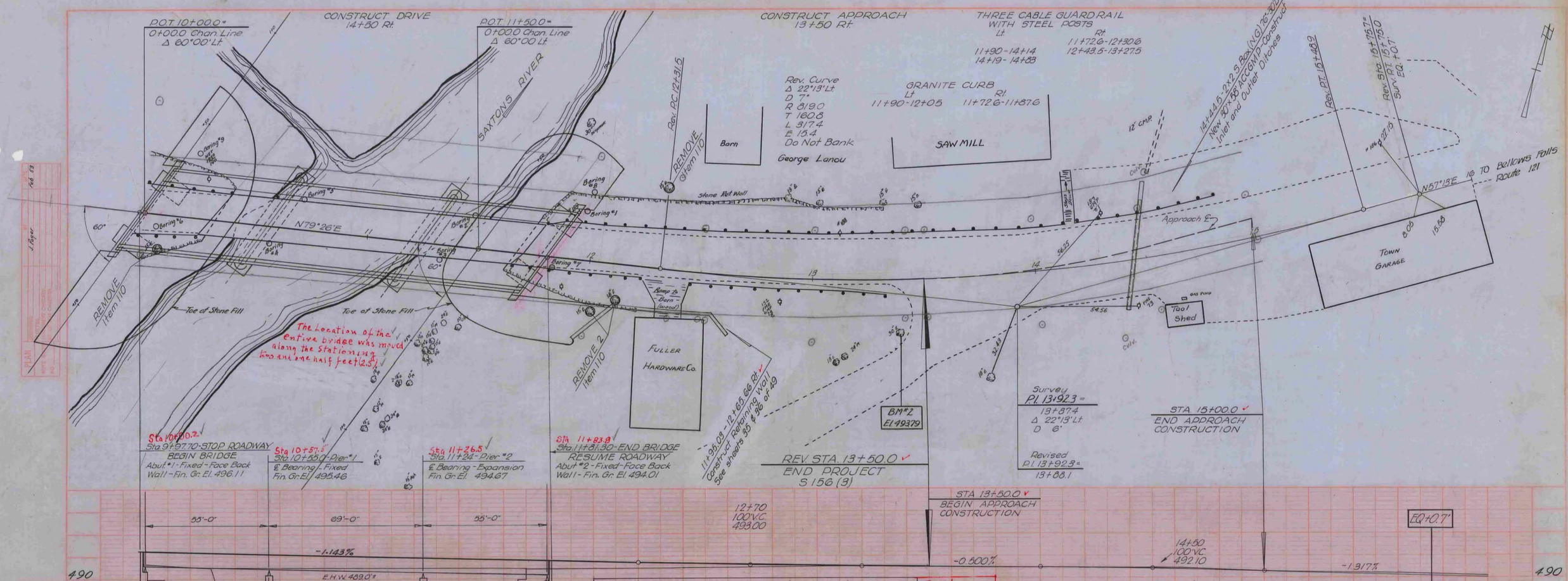

LIST OF QUANTITIES (Bridge Only)				Final
Quantity	Unit	Item	Item No.	Quantities
2415	c.y.	Channel Excavation Unclassified	106-C	3058 C.Y.
769	c.y.	Structure Excavation (modified)	107	870 " "
1	l.s.	Maintenance of Traffic for Bridge Projects	109	1 L.S.
2	each	Cutting and Removing Trees	110	2 Ea.
68	tons	Bituminous Concrete Pavement for Bridge Floors	381	68 Ton
790	c.y.	Concrete Class "B" (modified)	401-B	813 C.Y.
74834	lbs	Reinforcing Steel	402	94 216 Lbs.
210196	lbs.	Structural Steel	403-A	216 631 "
42	s.y.	Asphaltic Asbestos Coating	407	40 Sq.yd.
1	l.s.	Temporary Bridge	441	1 L.S.
1	l.s.	Removal of Present Superstructure	442	1 " "
2250	c.y.	Stone Fill	521	2381 C.Y.
364	l.f.	Bridge Railing	572	365 L.F.
1	l.s.	Conduit for Lighting System	573-B	1 L.S.

LIST OF SHEETS (Bridge Only)

Sheet 33 of 49		Plan and Profile
6	"	Preliminary Information Sheet
7	"	Boring Data
8	"	Bridge Plan and Elevation
9	"	Details Abutment No. 1
10	"	Details Piers #1 & #2
11	"	Details Abutment No. 2
12	"	Superstructure Details
13	"	Details of Bearings
14	"	Details of Cover Plates and Splice Plates
15	"	Expansion Plate Details
16	"	Details of Concrete Facing
17	"	Details of Reinforcing Steel
18	"	Std. Sheet SB-11-Barricades, Signs and Lights
19	"	Std Sheet SB-20 Details C-D-H-J-M
20	"	Std Sheet SB-55-1 Bridge Railing Details
21-30	"	Channel Sections

FOR REFERENCE ONLY

SHEET 68 OF 69

ROCKINGHAM
Proj. S No. 156(3)
Sheet 33 of 49

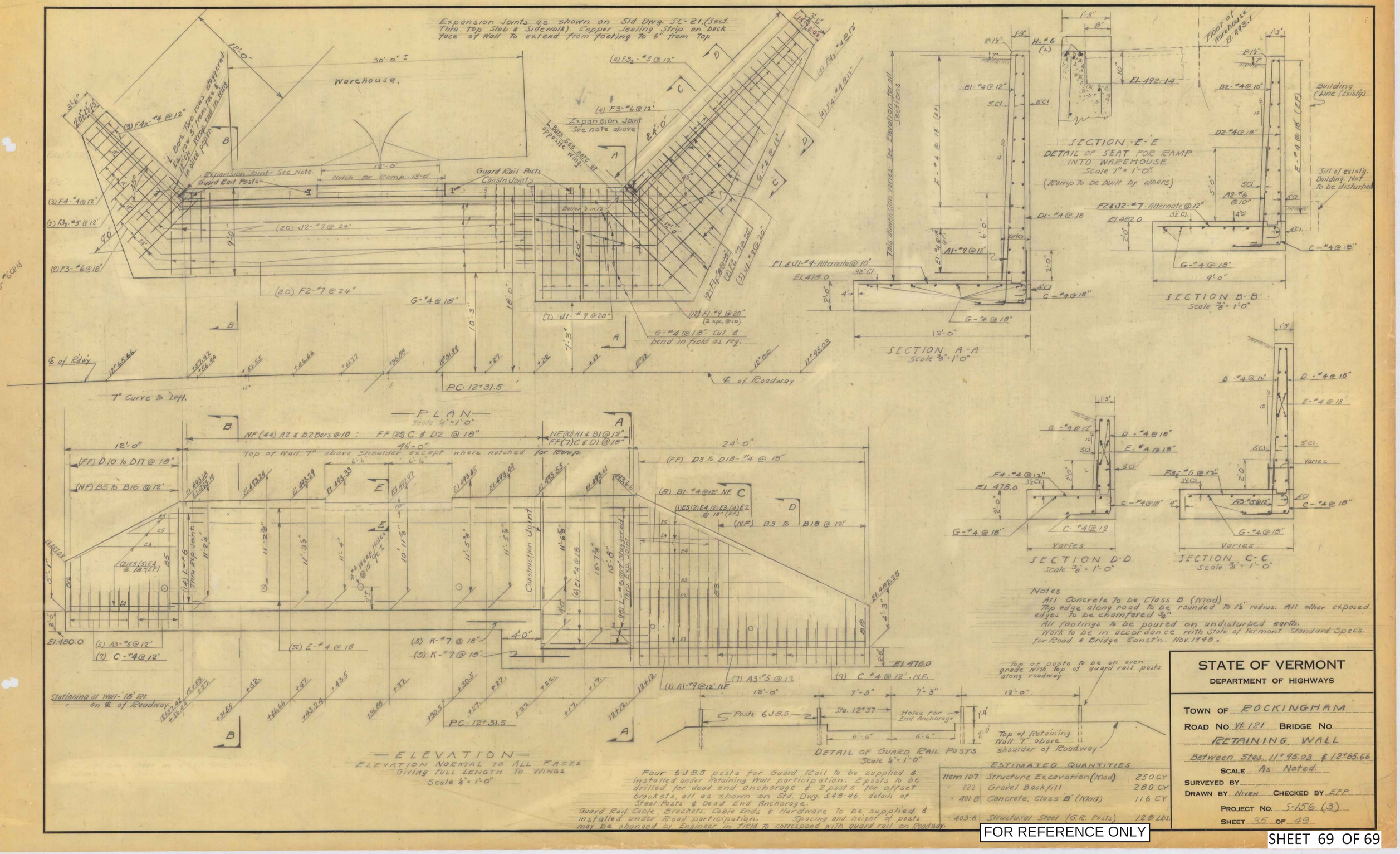

Four 6 J 8.5 posts for Guard Rail to be supplied & installed under Retaining Wall participation: 2 posts to be drilled for dead end anchorage & 2 posts for offset brackets, all as shown on Std. Dwg. S48-46, details of Steel Posts & Dead End Anchorage.

Guard Rail Cable, Brackets, Cable Ends & Hardware to be supplied & installed under Road participation. Spacing and height of posts may be changed by Engineer in field to correspond with guard rail on Roadway.

Notes

All Concrete to be Class B (Mod)
Top edge along road to be rounded to 1½" radius. All other exposed edges to be chamfered ¾"
All footings to be poured on undisturbed earth.
Work to be in accordance with State of Vermont Standard Specs. for Road & Bridge Constn. Nov. 1948.

ESTIMATED QUANTITIES

Item 107	Structure Excavation (Mod)	250 CY	
" 222	Gravel Backfill	280 CY	
" 401-B	Concrete, Class B (Mod)	116 CY	
" 403-A	Structural Steel (G.R. Posts)	128 LBS.	

STATE OF VERMONT
DEPARTMENT OF HIGHWAYS

TOWN OF ROCKINGHAM
ROAD NO. Vt. 121 BRIDGE NO.
RETAINING WALL
Between Stas. 11+95.03 & 12+65.66
SCALE As Noted.
SURVEYED BY
DRAWN BY NIVEN CHECKED BY EFP
PROJECT NO. S-156 (3)
SHEET 35 OF 49

FOR REFERENCE ONLY