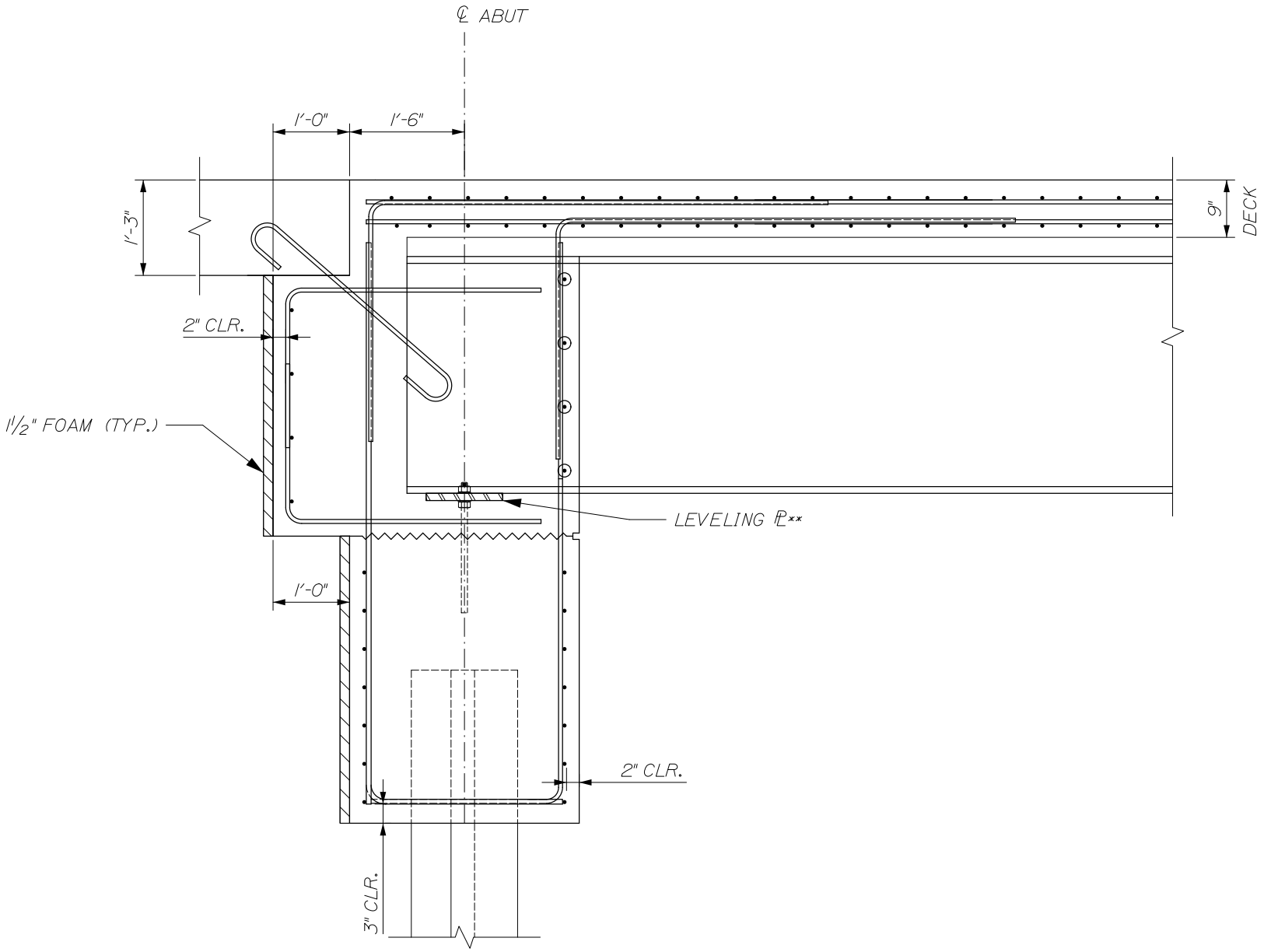

ABUTMENT REINF. SECTION

3/4" = 1'-0"