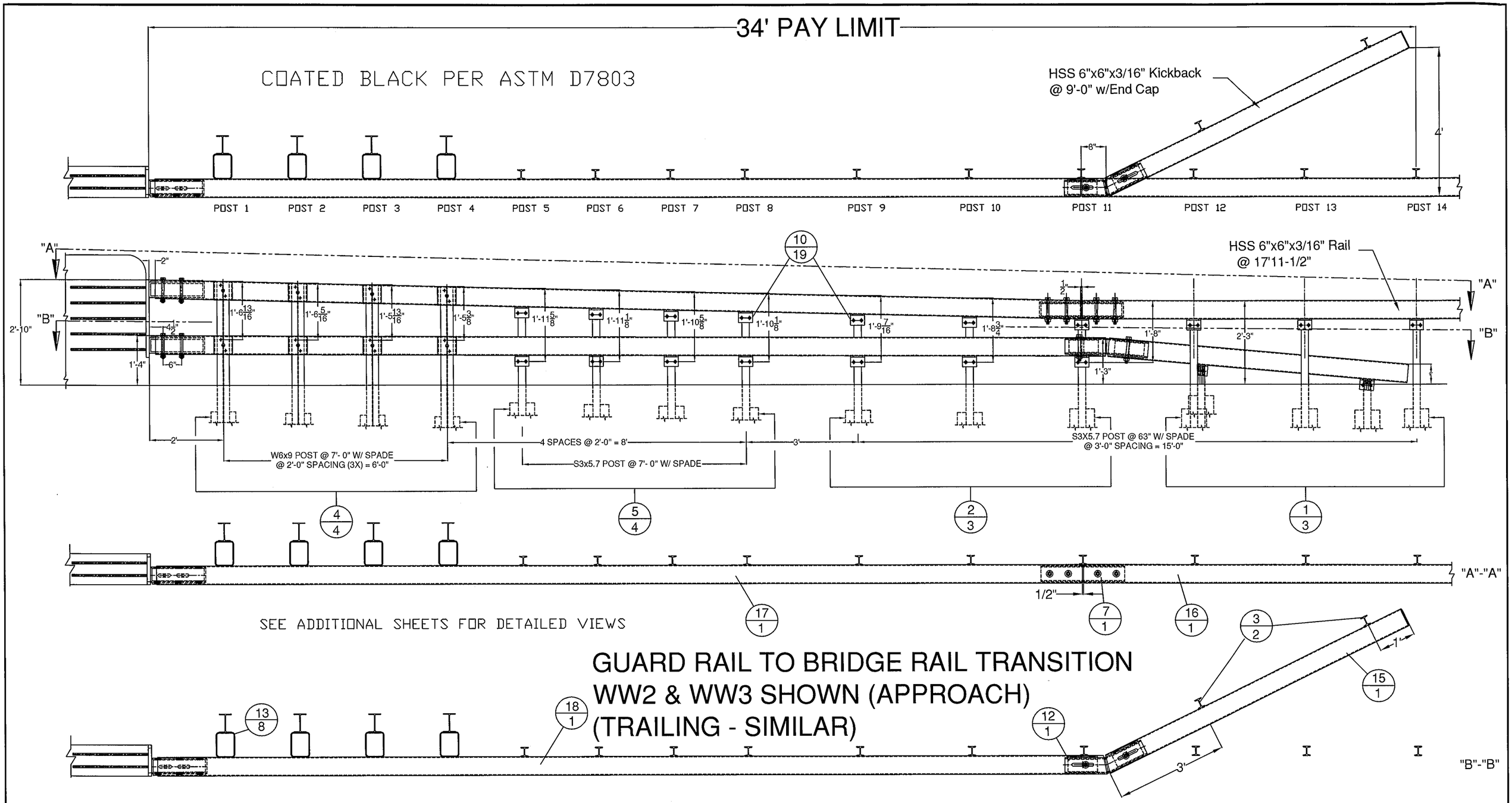

GUARD RAIL TO BRIDGE RAIL TRANSITION
WW2 & WW3 SHOWN (APPROACH)
(TRAILING - SIMILAR)

ITEM #: 621.72

SHEET 1 OF 5

STRUCTURAL STEEL TO COMPLY W/ ASTM A6

TOLERANCE UNLESS OTHERWISE NOTED:
FRACTIONS = ± 1/16"
ANGLES = ± 1/2°
DIAMETERS = ± 1/32"

GRAS, GLV 2 RAIL BOX BEAM

EM14-192, VT 121 (CL 2, TH 1) RURAL MAJOR COLLECTOR, BRIDGE NO : 11R
PROJECT: ROCKINGHAM BRF 0126(12), TOWN OF ROCKINGHAM, WINDHAM COUNTY, VT

REV	NO.	DATE	DESCRIPTION	BY	REV	NO.	DATE	DESCRIPTION	BY

ELDERLEE, INC.
OAKS CORNERS, NEW YORK 14518
E-Mail: dlong@elderlee.com / epeek@elderlee.com
Tel: 315-789-6670 Fax: 315-789-6615

AISC CERTIFIED FABRICATOR

DRAWN	E.P.	12/24/14
CHECKED	D.L.	.
APPROVED	M.V.	.
SCALE	SCHEMATIC	
DRAWING NO.	FR L - ROCKINGHAM-T	

PLAN VIEW

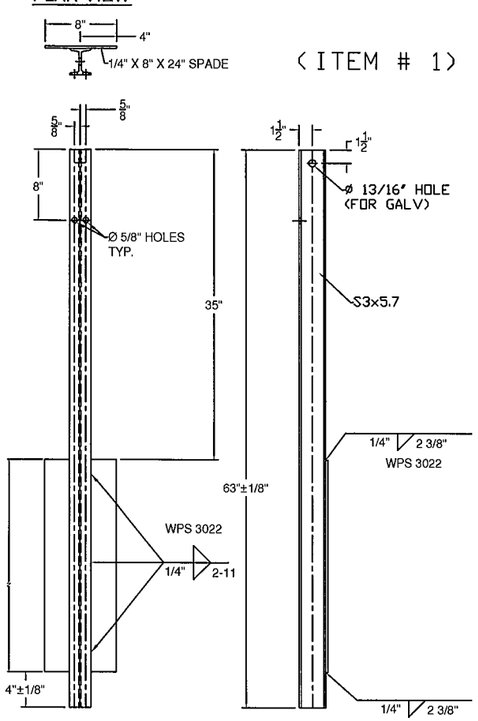

(ITEM # 1)

PLAN VIEW

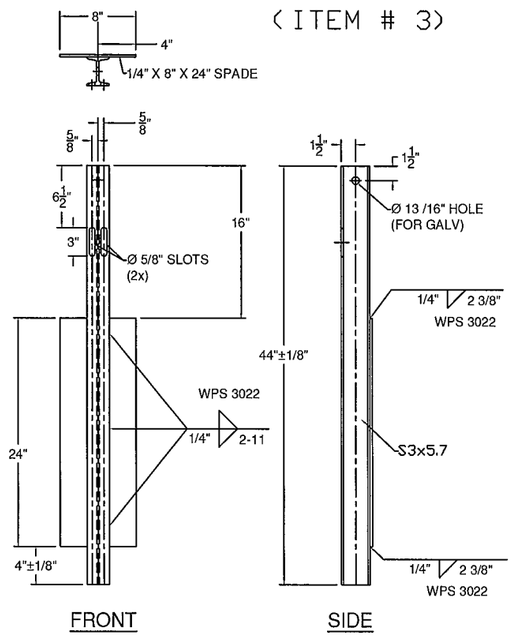

(ITEM # 3)

PLAN VIEW

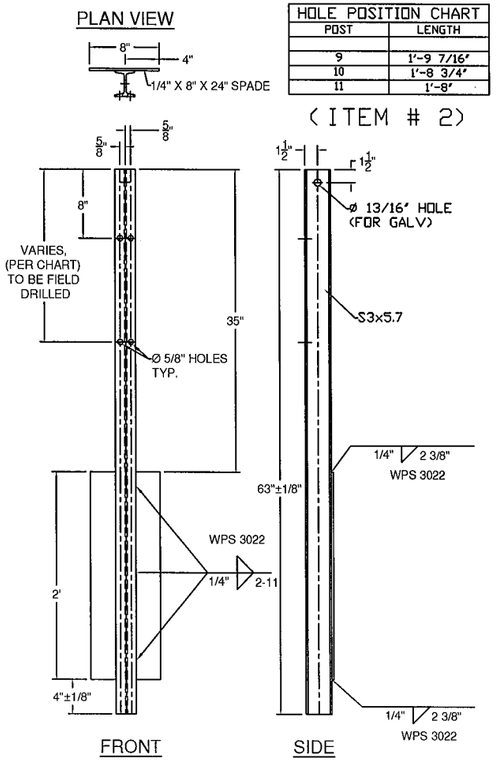

HOLE POSITION CHART	
POST	LENGTH
9	1'-9 7/16"
10	1'-8 3/4"
11	1'-8"

(ITEM # 2)

GENERAL NOTES:

1) ALL RAILING IS TO BE FABRICATED AND ERECTED ACCORDING TO SECTION 525 OF THE STANDARD SPECIFICATIONS.
2) BOLTS SHALL BE TORQUED SNUG TIGHT (APPROXIMATELY 100 FT-LB).
3) PROTRUSIONS CAUSED BY WELDING OR GALVANIZING ARE NOT PERMITTED ON THE ADJOINING SURFACES OF THE BOX BEAM RAILS, SPLICE TUBES AND FILL PLATES.
4) BOX BEAM TUBE AND STEEL POST MATERIALS, DIMENSION SIZES AND NOTES SHALL BE THE SAME AS THOSE OF THE BRIDGE RAIL, UNLESS OTHERWISE NOTED.
5) ANY BENDING OF RAIL SHALL BE DONE AT THE FABRICATION PLANT. RADII GREATER THAN 16' TO BE CURVED ON A TUBE BENDING MACHINE, RADII LESS THAN 16' TO BE "PIE CUT" AND WELDED. CURVED RAILING WILL HAVE AN 18" LENGTH ON EACH END STRAIGHT TO ACCOMADATE SPLICES.
6) ALL STEEL COMPONENTS SHALL BE COATED BLACK IN ACCORDANCE WITH ASTM D7803 FOLLOWING GALVANIZING.

PLAN VIEW

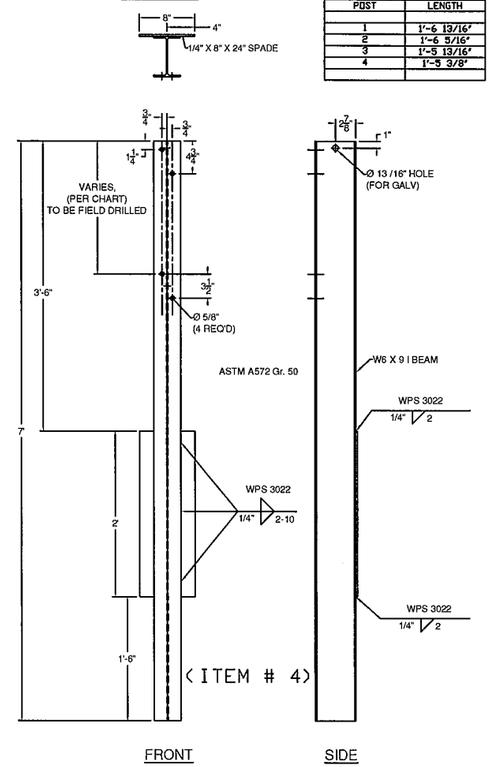

(ITEM # 4)

HOLE POSITION CHART	
POST	LENGTH
1	1'-6 13/16"
2	1'-6 5/16"
3	1'-5 13/16"
4	1'-5 3/8"

PLAN VIEW

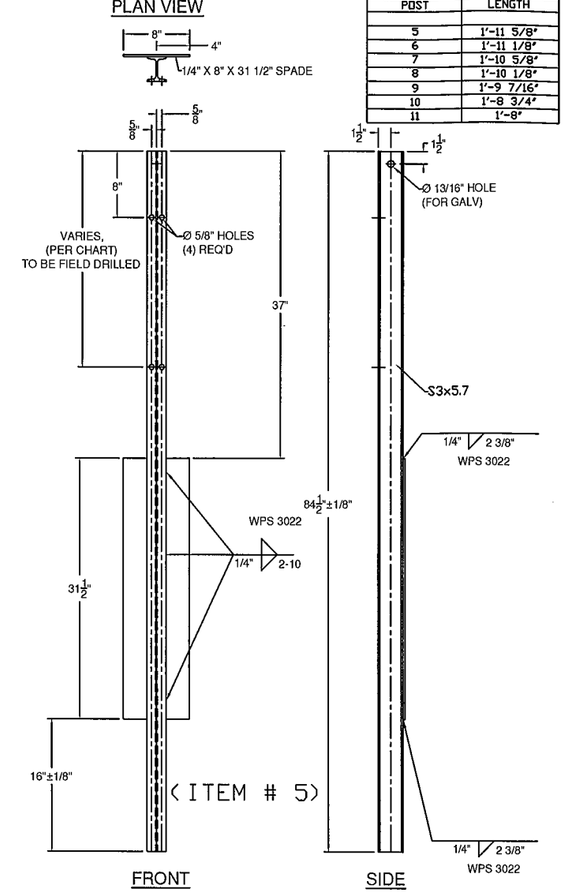

(ITEM # 5)

HOLE POSITION CHART	
POST	LENGTH
5	1'-11 5/8"
6	1'-11 1/8"
7	1'-10 5/8"
8	1'-10 1/8"
9	1'-9 7/16"
10	1'-8 3/4"
11	1'-8"

BILL OF MATERIALS, EACH CORNER

ITEM #	QTY.	COMPONENT #	DESCRIPTION	MATERIAL (ASTM)
1	3	0013.57021	3" I-POST, PUNCH 8" W/SPD @ 63" LG	ASTM A572 Gr. 50
2	3	0013.57025	3" I-POST W/SPD @ 63", PUNCH 8", & 20" & HOLES @ VARIOUS	ASTM A572 Gr. 50
3	2	0013.57060	3" I-END POST W/SPD @ 3'-8" LG	ASTM A572 Gr. 50
4	4	-	W6X9 POST @ 7' W/SPD & 5/8" HOLES @ VARIOUS	ASTM A572 Gr. 50
5	4	-	3" I-POST, PUNCH 8" & VARIOUS", W/8X32" SPADE @ 7'	ASTM A572 Gr. 50
7	1	0033.00640	HSS 5X5 TUBE SPLICE @ 27" LG W/ 1/4" SHIMS	A500 Gr. B / A572 Gr 50
10	19	0054.00050	REG BB SHELF ANGLES @ 4-1/2"	ASTM A36
12	1	-	HSS 5X5 DBL BEND TUBE SPL @ 27" LG	A500 Gr. B / A572 Gr 50
13	8	0054.00563	6X8" TRANS. TUBE B/□ @ 6" LG	A500 Gr. B
15	1	0054.09000	6X6" BB @ 9'-0" KICKBACK, W/ CAP	A500 Gr. B / A36
16	1	0054.18000	6X6" BB @ 17'-11 1/2", DRILL 3' CC	A500 Gr. B
17	1	-	6X6" BB TOP TRANS @ 24'-9 3/4" LG W/EXP END	A500 Gr. B
18	1	-	6X6" BB BTM TRANS @ 25'-5 1/2" LG W/EXP END	A500 Gr. B
19	18	0080.03355	Ø3/8" X 7 1/2" BOLT, NUT, & 2 FW	A307
20	19	0080.04100	Ø1/2" x 1-1/2" BOLT, NUT, & FW	A307
21	16	0080.04120	Ø1/2" x 1-1/2" BOLT, NUT, 2 FW & LW	A307
23	10	0080.06340	Ø3/4" X 7-1/2" BOLT, NUT, 2 FW	A325, A563, F436
24	8	0080.06370	Ø3/4" X 8" CARR BOLT, NUT, FW & LW	A307
25	1		Ø3/4" THREADED ROD @ 14", NUT & FW (S.E. CORNER TURNBACK)	A449, A563, F436

HARDWARE NOTES

ITEM #	FUNCTION
19	BOLT RAIL TO SHELF ANGLE (ITEM #10)
20	BOLT SHELF ANGLE (ITEM # 10) TO POST
21	BOLT BLOCK-OUTS (ITEM # 13) TO HEAVY POST (ITEM # 4)
23	SPLICE TUBING (ITEM #'S 7 & 12), & (4) PER PARAPET WALL CONNECTION
24	BOLT RAIL (ITEMS #'S 17, & 18 TO BLOCK-OUTS (ITEM # 13)

ITEM #: 621.72

SHEET 2 OF 5

STRUCTURAL STEEL TO COMPLY W/ ASTM A6

TOLERANCE UNLESS OTHERWISE NOTED:
FRACTIONS = ± 1/16"
ANGLES = ± 1/2°
DIAMETERS = ± 1/32"

GRAS, GLV 2 RAIL BOX BEAM

EM14-192, VT 121 (CL 2, TH 1) RURAL MAJOR COLLECTOR, BRIDGE NO : 11R
PROJECT: ROCKINGHAM BRF 0126(12), TOWN OF ROCKINGHAM, WINDHAM COUNTY, VT

REV	NO.	DATE	DESCRIPTION	BY	REV	NO.	DATE	DESCRIPTION	BY

ELDERLEE, INC.
OAKS CORNERS, NEW YORK 14518
E-Mail: dlong@elderlee.com / epeek@elderlee.com
Tel: 315-789-6670 Fax: 315-789-6615

AISC CERTIFIED FABRICATOR

DRAWN	E.P.	12/24/14
CHECKED	D.L.	.
APPROVED	M.V.	.
SCALE	SCHEMATIC	
DRAWING NO.	FR L - ROCKINGHAM-T	

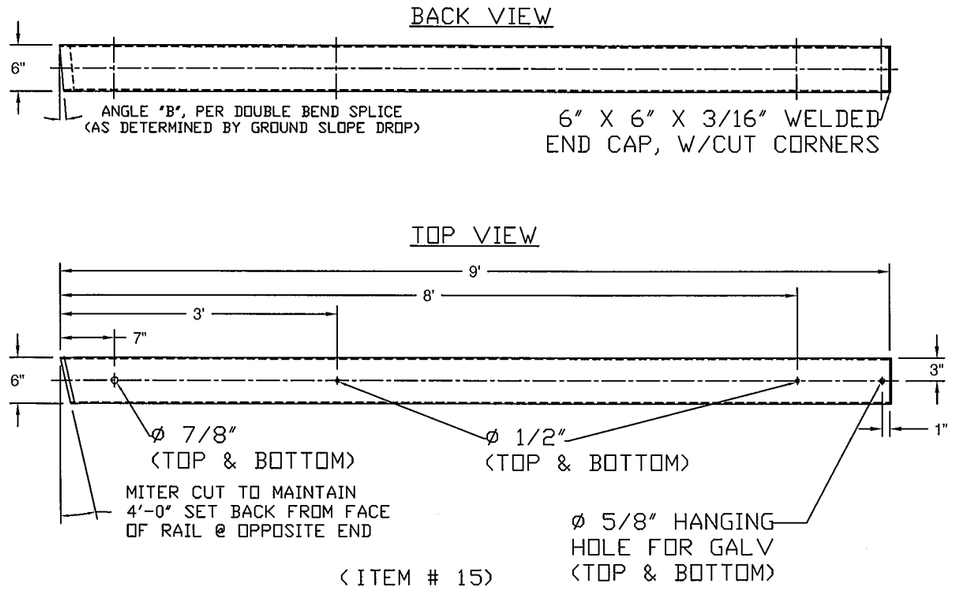

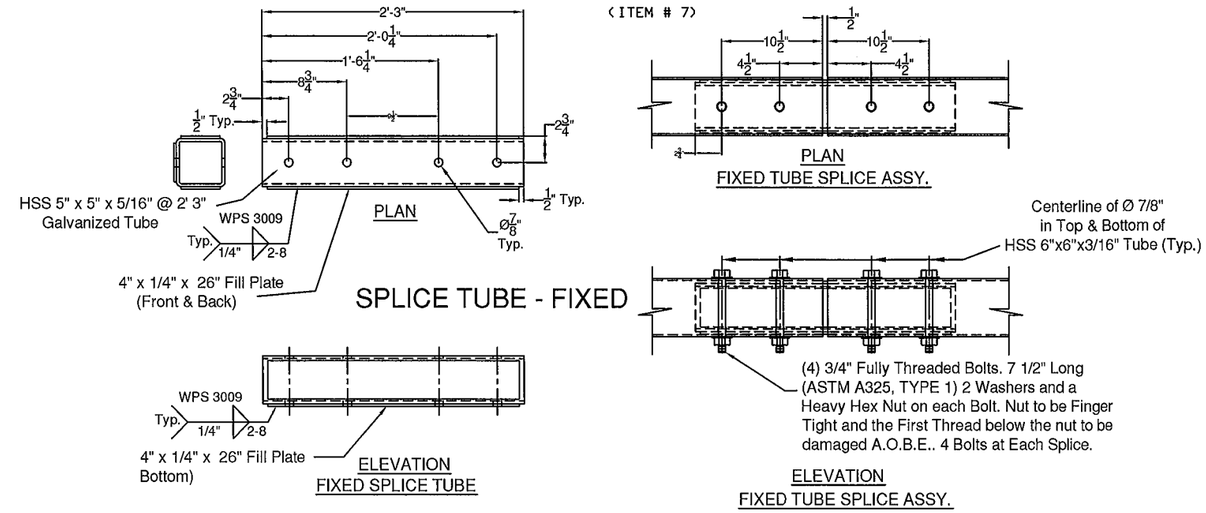

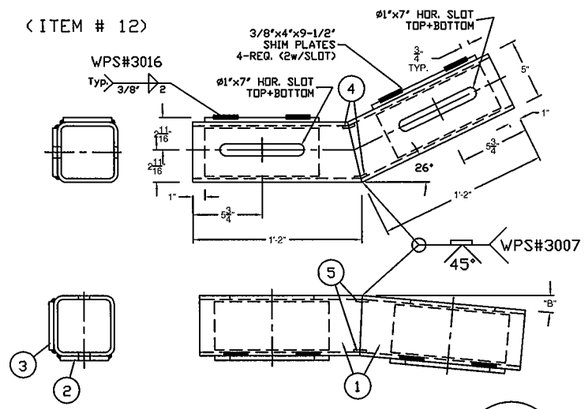

DOUBLE BEND TUBE SPLICE		
ITEM#	QTY.	DESCRIPTION
1	1	5" X 5" X 5/16" TUBE @ 86 3/4"
2	2	3/8" X 4" X 9 1/2" W/ SLOTS-ASTM A709 Gr36
3	2	3/8" X 4" X 9 1/2" W/O SLOTS-ASTM A709 Gr36
4	2	3/16" X 1" X 3 5/8" BACKER PLATE, FORMED
5	2	3/16" X 1" X 4" BACKER PLATE

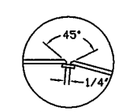

Welding Detail
WPS 3007

"B" - TURN DOWN ANGLE SET BY THE 9" MEASURMENT AT THE END OF THE BOX BEAM.

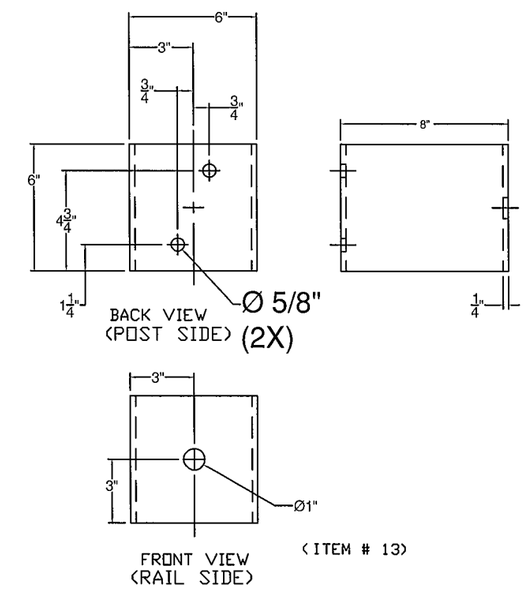

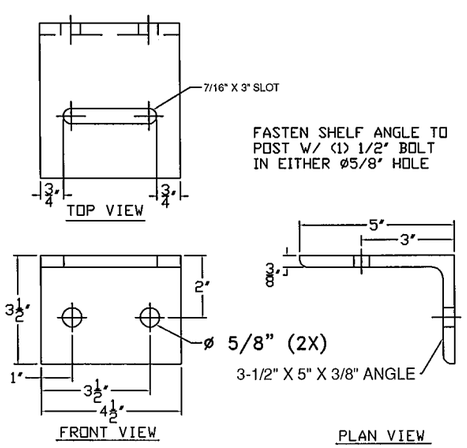

ITEM #: 621.72

SHEET 3 OF 5

STRUCTURAL STEEL TO COMPLY W/ ASTM A6

TOLERANCE UNLESS OTHERWISE NOTED:
FRACTIONS = ± 1/16"
ANGLES = ± 1/2°
DIAMETERS = ± 1/32"

GRAS, GLV 2 RAIL BOX BEAM

EM14-192, VT 121 (CL 2, TH 1) RURAL MAJOR COLLECTOR, BRIDGE NO : 11R
PROJECT: ROCKINGHAM BRF 0126(12), TOWN OF ROCKINGHAM, WINDHAM COUNTY, VT

REV	NO.	DATE	DESCRIPTION	BY	REV	NO.	DATE	DESCRIPTION	BY

ELDERLEE, INC.
OAKS CORNERS, NEW YORK 14518
E-Mail: dlong@elderlee.com / epeek@elderlee.com
Tel: 315-789-6670 Fax: 315-789-6615

AISC CERTIFIED FABRICATOR

DRAWN	E.P.	12/24/14
CHECKED	D.L.	.
APPROVED	M.V.	.
SCALE	SCHEMATIC	
DRAWING NO.	FR L - ROCKINGHAM-T	

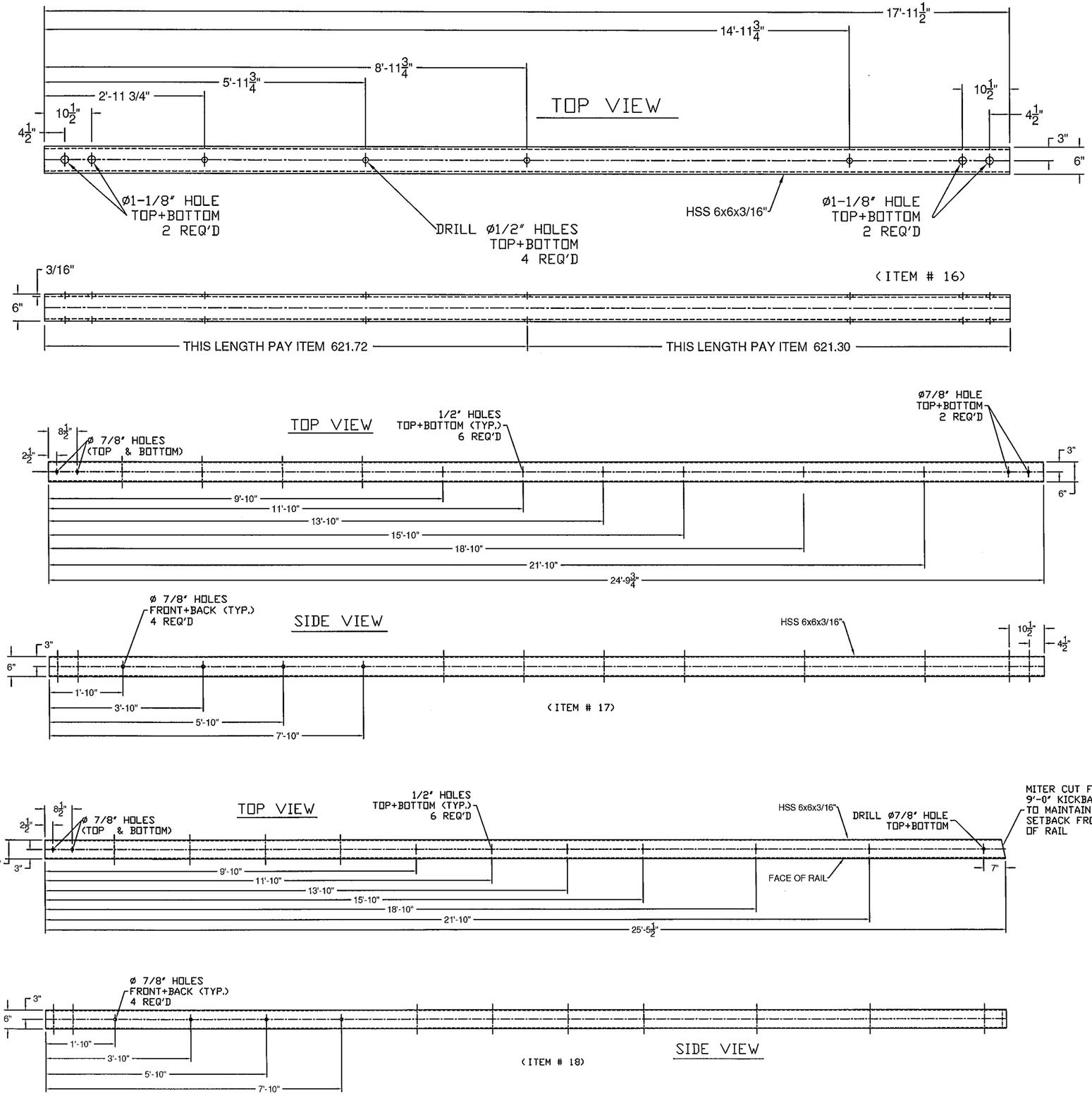

ITEM #: 621.72

SHEET 4 OF 5

STRUCTURAL STEEL TO COMPLY W/ ASTM A6

TOLERANCE UNLESS OTHERWISE NOTED:
FRACTIONS = ± 1/16"
ANGLES = ± 1/2°
DIAMETERS = ± 1/32"

GRAS, GLV 2 RAIL BOX BEAM

EM14-192, VT 121 (CL 2, TH 1) RURAL MAJOR COLLECTOR, BRIDGE NO : 11R
PROJECT: ROCKINGHAM BRF 0126(12), TOWN OF ROCKINGHAM, WINDHAM COUNTY, VT

REV	NO.	DATE	DESCRIPTION	BY	REV	NO.	DATE	DESCRIPTION	BY

ELDERLEE, INC.
OAKS CORNERS, NEW YORK 14518
E-Mail: dlong@elderlee.com / epeek@elderlee.com
Tel: 315-789-6670 Fax: 315-789-6615

AISC CERTIFIED FABRICATOR

DRAWN	E.P.	12/24/14
CHECKED	D.L.	.
APPROVED	M.V.	.
SCALE	SCHEMATIC	
DRAWING NO.	FR L - ROCKINGHAM-T	

NOTE: S.E. CORNER, BOTTOM RAIL TURNBACK (ITEM #15) - SUPPLIED @ STD 9'-0" LENGTH W/ WELDED END CAP. CUT & DRILL SPLICE END TO MATCH FIELD REQUIREMENTS.

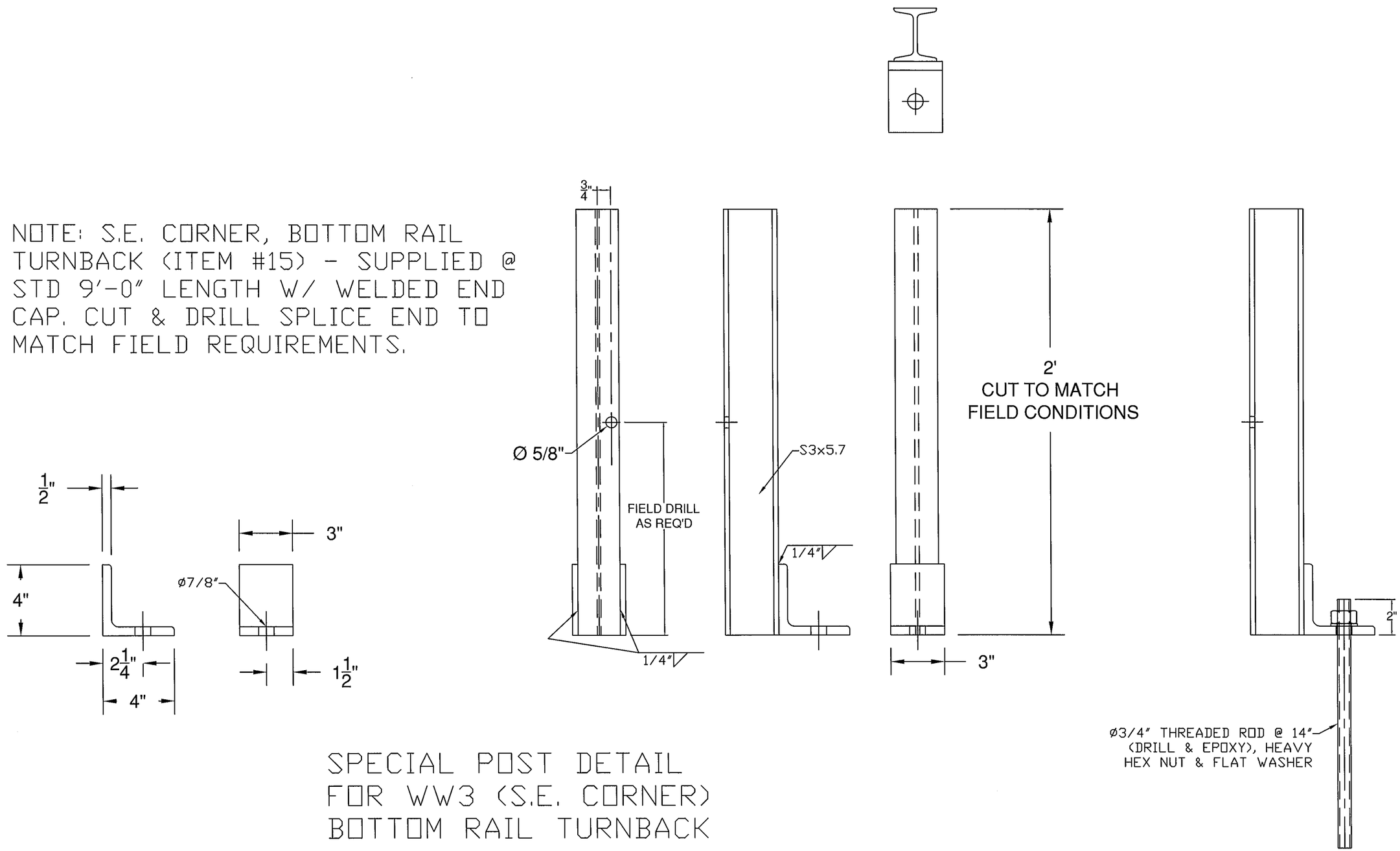

SPECIAL POST DETAIL FOR WW3 (S.E. CORNER) BOTTOM RAIL TURNBACK

ITEM #: 621.72

SHEET 5 OF 5

STRUCTURAL STEEL TO COMPLY W/ ASTM A6

TOLERANCE UNLESS OTHERWISE NOTED:
FRACTIONS = ± 1/16"
ANGLES = ± 1/2°
DIAMETERS = ± 1/32"

GRAS, GLV 2 RAIL BOX BEAM

EM14-192, VT 121 (CL 2, TH 1) RURAL MAJOR COLLECTOR, BRIDGE NO : 11R
PROJECT: ROCKINGHAM BRF 0126(12), TOWN OF ROCKINGHAM, WINDHAM COUNTY, VT

REV	NO.	DATE	DESCRIPTION	BY	REV	NO.	DATE	DESCRIPTION	BY

ELDERLEE, INC.
OAKS CORNERS, NEW YORK 14518
E-Mail: dlong@elderlee.com / epeek@elderlee.com
Tel: 315-789-6670 Fax: 315-789-6615

AISC CERTIFIED FABRICATOR

DRAWN	E.P.	12/24/14
CHECKED	D.L.	.
APPROVED	M.V.	.
SCALE	SCHEMATIC	
DRAWING NO.	FR L - ROCKINGHAM-T	