Revise to be Method B with the appropriate testing requirements.

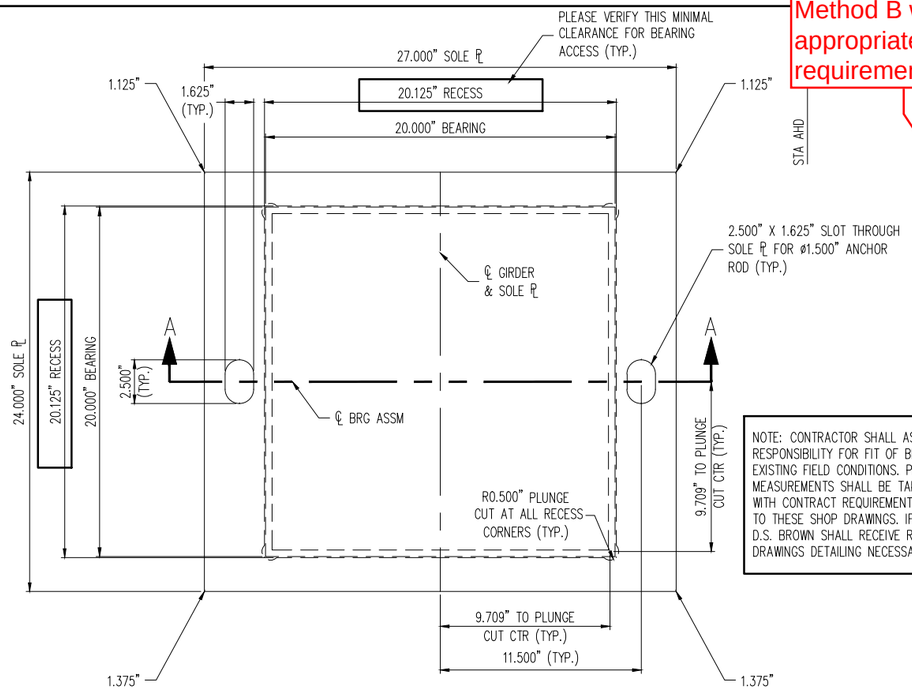

PLAN VIEW

EXP. ELASTOMERIC BEARING
(4) REQ'D @ PIER 1
(4) REQ'D @ PIER 2
(2) SAMPLE BEARINGS W/O EXT. STEEL REQ'D

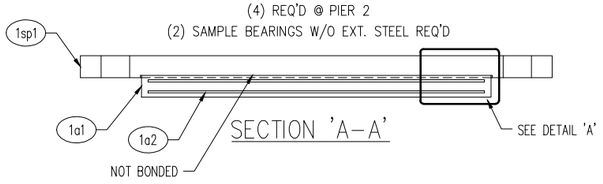

SECTION 'A–A'

NOTE: CONTRACTOR SHALL ASSUME FULL RESPONSIBILITY FOR FIT OF BEARINGS WITH EXISTING FIELD CONDITIONS. PROPER FIELD MEASUREMENTS SHALL BE TAKEN IN ACCORDANCE WITH CONTRACT REQUIREMENTS AND COMPARED TO THESE SHOP DRAWINGS. IF A CONFLICT EXISTS, D.S. BROWN SHALL RECEIVE RED–MARKED SHOP DRAWINGS DETAILING NECESSARY REVISIONS.

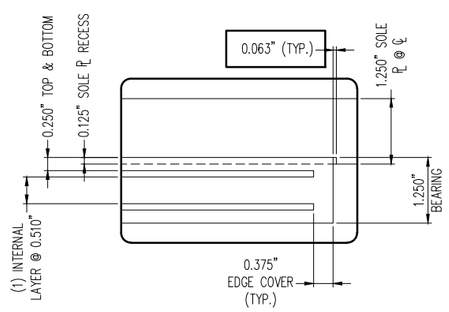

DETAIL 'A'

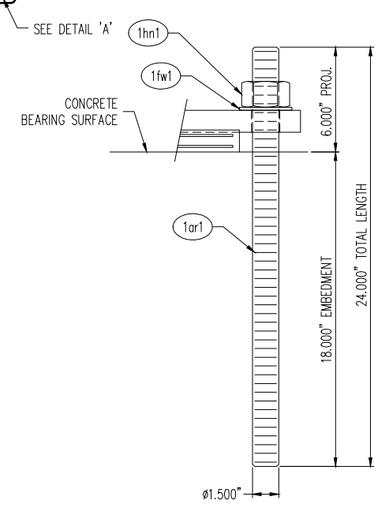

ANCHOR ROD ASSEMBLY

(8) REQ'D @ PIER 1
(8) REQ'D @ PIER 2
(16) REQ'D TOTAL

GENERAL NOTES:

1. MATERIALS SHALL CONFORM TO STATE OF VERMONT, AGENCY OF TRANSPORTATION STANDARD SPECIFICATIONS FOR CONSTRUCTION, DATED 2011 AND THE LATEST REVISIONS, INCLUDING SUPPLEMENTARY SPECIFICATIONS, CONTRACT PLANS, AND THE SPECIAL PROVISIONS. GENERAL SHOP PRACTICES, STRUCTURAL FABRICATION, WELDING AND ASSEMBLY SHALL BE GOVERNED BY ANSI/AASHTO/AWS D1.5 BRIDGE WELDING CODE.

2. THIS SHOP DRAWING WAS PREPARED IN ACCORDANCE WITH THE CONTRACT PLANS AND SPECIFICATIONS. THE D.S. BROWN COMPANY DOES NOT ACCEPT LIABILITY FOR THE DESIGN OF THE PRODUCTS DETAILED IN THIS SHOP DRAWING.

3. THE D.S. BROWN COMPANY TO SUPPLY ONLY THE PARTS SHOWN ON THIS SHOP DRAWING.

4. THE BEARINGS SHALL BE SUBJECT TO RANDOM IN–HOUSE ELASTOMER TESTING AND IN–HOUSE PROOF LOAD TESTING IN ACCORDANCE WITH AASHTO LRFD BRIDGE DESIGN SPECIFICATIONS, SECTION 14 (METHOD 'A') AND AASHTO LRFD CONSTRUCTION SPECIFICATIONS SECTION 18.

5. ALL STEEL SHALL BE PRODUCED IN THE UNITED STATES OF AMERICA.

6. ALL CORNERS AND EDGES OF STEEL PLATES SHALL BE GROUND TO A 1/16" RADIUS FOR GALVANIZING.

7. ALL EXTERNAL STEEL SHALL BE GALVANIZED IN ACCORDANCE WITH AASHTO M111 AND M232 (ASTM 123 & 153) SPECIFICATIONS. IN ACCORDANCE WITH SECTION 726.08 OF THE STANDARD SPECIFICATIONS, REPAIR DAMAGED HOT DIPPED GALVANIZING PER ASTM A780, ANNEX A2. THE PAINT USED IN THE REPAIR SHALL BE ORGANIC–ZINC, CONTAINING 92% MINIMUM ZINC BY WEIGHT IN THE DRY FILM. THE PAINT SHALL BE APPLIED PER MANUFACTURER'S RECOMMENDATIONS TO A THICKNESS EQUIVALENT TO THE SURROUNDING GALVANIZING.

8. GALVANIZATION LIFTING DEVICES MAY BE WELDED TO PARTS IF NECESSARY. WHEN THEIR USE IS COMPLETE, REMOVE AND GRIND FLUSH ALL CONNECTION LOCATIONS. REPAIR AREA PER ASTM A780, ANNEX A2.

9. INTERNAL ALIGNMENT PINS: AFTER FABRICATION, HOLES TO BE FILLED WITH ELASTOMER EQUIVALENT TO THAT USED IN THE MANUFACTURE OF THE PAD.

10. BEARIINGS SHALL BE TESTED IN ACCORDANCE WITH M251, TABLE X1.

11. BEARING MANUFACTURING FACILITY AND REPRESENTATIVE FOR COORDINATING PRODUCTION:
THE D.S. BROWN COMPANY
300 EAST CHERRY STREET
NORTH BALTIMORE, OHIO 45872
CSR – MARCIE THOMPSON – (419) 257–3561

MARKING NOTES:

1. EACH BEARING SHALL BE PERMANENTLY MARKED. THE MARKING SHALL CONSIST OF THE ORDER NUMBER, LOT NUMBER, PAD IDENTIFICATION NUMBER, UP STATION AND ELASTOMER TYPE AND GRADE. WHERE POSSIBLE, THE MARKING SHALL BE ON A FACE WHICH IS VISIBLE AFTER ERECTION OF THE STRUCTURE.

2. MARK THE THICKER EDGE OF THE BEVELED PLATE FOR IDENTIFICATION IN THE FIELD.

CONTRACTOR NOTES:

1. WELDING PROCEDURES SHALL BE ESTABLISHED BY THE CONTRACTOR TO RESTRICT THE TEMPERATURE TO A MAXIMUM OF 200°F (93°C) FOR SURFACES IN CONTACT WITH THE ELASTOMER. TEMPERATURES SHALL BE DETERMINED BY TEMPERATURE INDICATING WAX PENCILS OR OTHER SUITABLE MEANS.

PLEASE VERIFY. PLANS HAVE MULTIPLE , CONFLICTING, SPECIFICATIONS.

MK	QTY	DESCRIPTION	MATERIAL	LENGTH	REMARKS	WT*	REV
1A	10	ELASTOMERIC BEARING	46768.1103.1		8 + 2 SAMPLES	45	
1a1	10	1.250" X 20.000"	NATURAL RUBBER	20.000"	50+/–5 DURO GR.4	20	
1a2	20	11 GA. X 19.250"	A1011 GR 36	19.250"	PLAIN	13	
1B	8	SOLE PLATE	46768.1107.1			253	
1sp1	8	1.375" X 27.000"	M270 GR 50W (A709)	24.000"	M111–HDG (A123)	253	
1C	16	THREADED ROD				12	
1ar1	16	Ø1.500" X 24.000" THREADED ROD	M314 GR 36 (F1554)		M232–HDG (A153)	12	
1D	16	HEX NUT				1	
1hn1	16	Ø1.500" HEX NUT	M291–DH OR M292–2H (A563 OR A194) HEAVY HEX		M232–HDG (A153), DRY LUBE & DYE	1	
1F	16	FLAT WASHER				< 1	
1fw1	16	Ø1.500" FLAT WASHER	M293 (F436)		M232–HDG (A153)	< 1	
		*Approx. Gross Wt. Lbs Per Single Unit			4/8/15 8:38:43 AM		

TOLERANCE TABLE	
DESCRIPTION	TOLERANCE (INCHES U.N.O.)
ELASTOMERIC BEARING DESIGN THICKNESS ≤ 1.250"	–0, +0.1181
ELASTOMERIC BEARING DESIGN THICKNESS > 1.250"	–0, +0.2362
ELASTOMERIC BEARING PLAN DIMENSIONS ≤ 36"	–0, +0.2362
ELASTOMERIC BEARING PLAN DIMENSIONS > 36"	–0, +0.4724
THICKNESS OF INDIVIDUAL LAYERS OF ELASTOMER (LAMINATED BEARINGS ONLY) AT ANY POINT WITHIN THE BEARING	±0.1181
VARIATION FROM A PLANE PARALLEL TO THE THEORETICAL SURFACE (AS DETERMINED BY MEASUREMENTS AT THE EDGE OF THE BEARINGS) (PARALLELISM):	
TOP & BOTTOM	±0.005 RAD
SIDES	±0.2362
POSITION OF EXPOSED CONNECTION MEMBERS	±0.1181
ELASTOMERIC COVER: TOP & BOTTOM	–0, +0.1181
ELASTOMERIC COVER: SIDES	–0, +0.1181
ELASTOMERIC BEARING HOLE OR SLOT SIZE	±0.1181
ELASTOMERIC BEARING HOLE OR SLOT LOCATION	±0.1181
STEEL PLATE THICKNESS	±0.063
STEEL PLATE PLAN DIMENSIONS ≤ 30"	±0.250
STEEL PLATE PLAN DIMENSIONS > 30"	±0.250
STEEL PLATE RECESS	–0, +0.063
STEEL PLATE FLATNESS IN CONTACT WITH BEARING	0.001 X NOM. DIMENSION *
STEEL PLATE FLATNESS: GROUT OR CONCRETE SIDE	0.005 X NOM. DIMENSION *
STEEL PLATE FLATNESS: STEEL GIRDER SIDE	0.002 X NOM. DIMENSION *
STEEL PLATE SURFACE FINISH IN CONTACT WITH BEARING	125 μ" RMS *
BEVEL SLOPE	±0.002 RAD
ANCHOR HOLE OR SLOT SIZE	±1/8
ANCHOR HOLE OR SLOT LOCATION	±1/8
* PRIOR TO GALVANIZATION	

PLEASE PROVIDE FOR M251 TESTING

LOAD DATA	
MAX DL + SDL REACTION (KIPS)	–
MAX LL (W/O I) REACTION (KIPS)	–

Vermont Agency of Transportation

Elastomeric Bearing Assembly Shop Drawing (4-8-15).pdf

RECEIVED

ON: April 8, 2015

and Checked for

CONFORMANCE

BY: TAS DATE: 04/10/15

REV.	DESCRIPTION	DATE	DET.	CKD.

D.S. BROWN
A GIBRALTAR INDUSTRIES COMPANY
THE D.S. BROWN COMPANY
300 E. CHERRY STREET
NORTH BALTIMORE, OHIO 45872
419.257.3561
FAX: 419.257.0332
WWW.DSBROWN.COM

LOCATION — VE SUPER DESIGN
—
PROJECT — BRF 0126 (12)
—
P.O. NO. — –
DESIGNER — CALDERWOOD ENGINEERING, ETC.
CUSTOMER — COLD RIVER BRIDGES, LLC

ITEM	QUANTITY
–	–
–	–
–	–
–	–
–	–
–	–
–	–
–	–
–	–

DESCRIPTION: VERSIFLEX ELASTOMERIC BEARING
WINDHAM COUNTY, VT

SCALE:	DRAWN BY:	CHECKED BY:	DATE:	
N.T.S.	SP	JAK	4/15	–
PROJECT NUMBER	PRODUCT CODE	RELEASE	SHEET	
46768	1104	–	01	