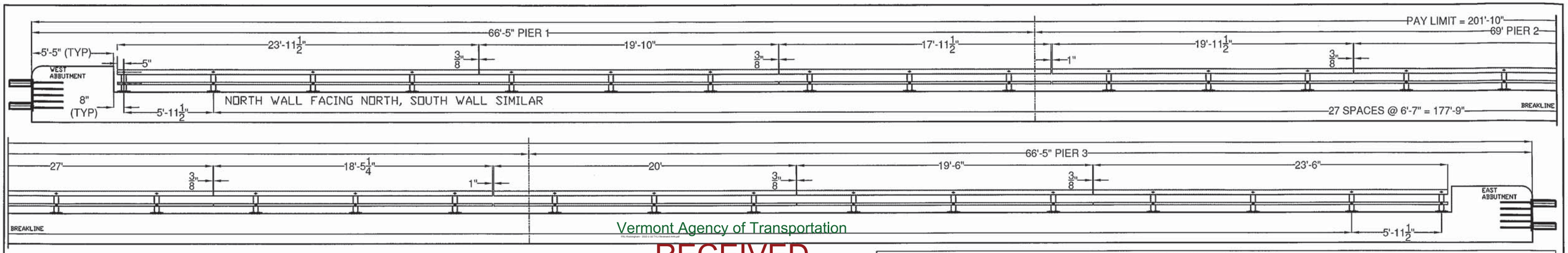

Vermont Agency of Transportation

RECEIVED
ON: December 29, 2014
and Checked for
CONFORMANCE
BY: TAS DATE: 01/20/2015

COATED BLACK - ASTM D7803

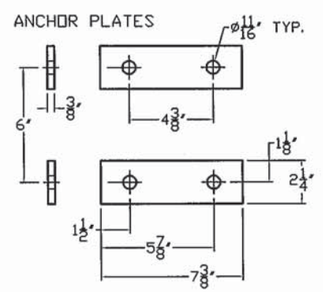

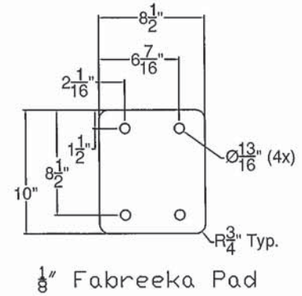

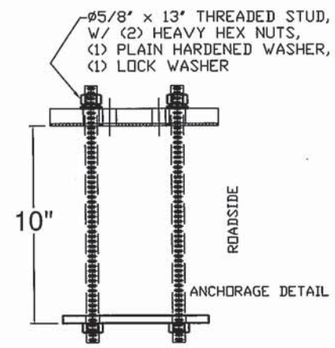

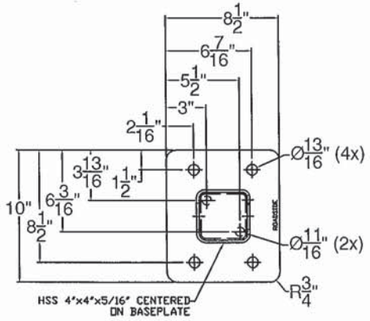

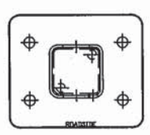

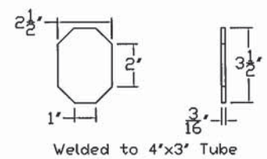

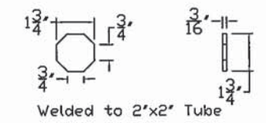

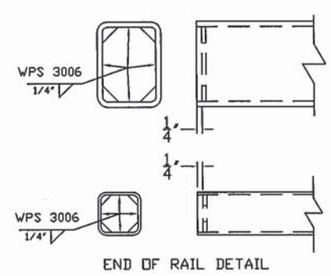

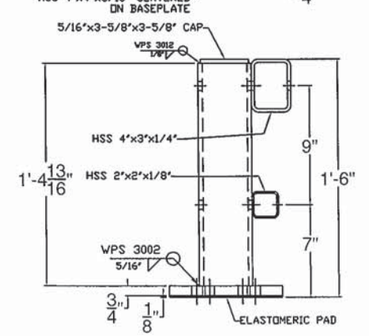

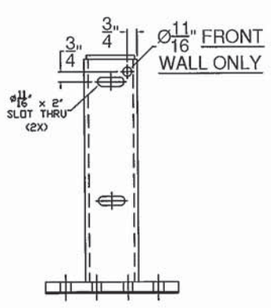

5/8"

NOTES:

1. ALL WORK AND MATERIALS SHALL CONFORM TO SECTION 525.
2. PRIOR TO GALVANIZING THE ASSEMBLED POST, GRIND ALL EDGES TO A MINIMUM RADIUS OF 1/16".
3. ALL POSTS SHALL BE SET NORMAL TO GRADE.
4. SECTIONS OF RAIL TUBE SHALL BE ATTACHED TO A MINIMUM OF TWO BRIDGE POSTS AND PREFERABLY TO AT LEAST 4 POSTS.
5. HOLES IN RAILS FOR TUBE ATTACHMENT, WILL BE SHOP-DRILLED. HOLES SHALL BE COATED WITH AN APPROVED ZINC-RICH PAINT PRIOR TO INSTALLATION.
6. BOLTS SHALL BE TORQUED SNUG TIGHT (APPROXIMATELY 100 FT-LB).
7. RAIL TUBES SHALL BE ATTACHED USING FULL DIAMETER BODY ASTM A449 (TYPE I) ROUND HEAD BOLTS INSERTED THROUGH THE FACE OF THE TUBE.
8. SEE STANDARD DRAWING G-1 FOR DETAILS OF DELINEATORS. A DELINEATOR SHALL BE INSTALLED AT 30 FOOT SPACING OR THE NEAREST POST. WHITE IS TO BE INSTALLED ON THE DRIVER'S RIGHT. FOR ONE WAY BRIDGES, YELLOW IS TO BE INSTALLED ON THE DRIVER'S LEFT. PAYMENT FOR DELINEATORS SHALL BE INCIDENTAL TO OTHER ITEMS.
9. AESTHETIC TREATMENT TYPE SHALL BE APPLIED AS SPECIFIED IN THE CONTRACT PLANS. IF NONE IS SPECIFIED IT SHALL NOT BE USED. AESTHETIC TREATMENT DETAILED ON THIS SHEET MAY ALSO BE APPLIED ON THE FASCIA SIDE OF THE RAIL, IF SPECIFIED IN THE CONTRACT PLANS.
10. BRIDGE RAILING SHALL HAVE A RUBBED FINISH IN ACCORDANCE WITH SECTION 501.
11. THIS RAILING MEETS THE REQUIREMENTS FOR A NCHRP REPORT 350 TL-4 SERVICE LEVEL.
12. HOLES FOR MOUNTING DELINEATORS TO BE FIELD DRILLED. HOLES SHALL BE COATED WITH AN APPROVED ZINC-RICH PAINT PRIOR TO INSTALLATION.
13. ALL STEEL COMPONENTS EXCEPT HARDWARE AND ANCHORAGE CAST IN CONCRETE SHALL BE COATED BLACK IN ACCORDANCE WITH ASTM D7803 FOLLOWING GALVANIZING.

BILL OF MATERIAL

ITEM #	QTY	PART #	DESCRIPTION	ASTM DESIGNATION
1	60	0033.90402	TWO RAIL POST & BASE PLATE ASSEMBLY	A572 Gr. 50, A500 Gr. B
2	2	0033.91331	4" X 3" X 1/4" RAIL @ 23'-11 1/2" W/ END PLATES	A500 Gr. B
3	2	0033.91332	4" X 3" X 1/4" RAIL @ 19'-10"	A500 Gr. B
4	2	0033.91333	4" X 3" X 1/4" RAIL @ 17'-11 1/2"	A500 Gr. B
5	2	0033.91334	4" X 3" X 1/4" RAIL @ 19'-11 1/2"	A500 Gr. B
6	2	0033.91335	4" X 3" X 1/4" RAIL @ 27'-0"	A500 Gr. B
7	2	0033.91336	4" X 3" X 1/4" RAIL @ 18'-5 1/4"	A500 Gr. B
8	2	0033.91337	4" X 3" X 1/4" RAIL @ 20'-0	A500 Gr. B
9	2	0033.91338	4" X 3" X 1/4" RAIL @ 19'-6"	A500 Gr. B
10	2	0033.91339	4" X 3" X 1/4" RAIL @ 23'-6" W/ END PLATES	A500 Gr. B
11	2	0033.91340	2" X 2" X 1/8" RAIL @ 23'-11 1/2" W/ END PLATES	A500 Gr. B
12	2	0033.91341	2" X 2" X 1/8" RAIL @ 19'-10"	A500 Gr. B
13	2	0033.91342	2" X 2" X 1/8" RAIL @ 17'-11 1/2"	A500 Gr. B
14	2	0033.91343	2" X 2" X 1/8" RAIL @ 19'-11 1/2"	A500 Gr. B
15	2	0033.91344	2" X 2" X 1/8" RAIL @ 27'-0"	A500 Gr. B
16	2	0033.91345	2" X 2" X 1/8" RAIL @ 18'-5 1/4"	A500 Gr. B
17	2	0033.91346	2" X 2" X 1/8" RAIL @ 20'-0"	A500 Gr. B
18	2	0033.91347	2" X 2" X 1/8" RAIL @ 19'-6"	A500 Gr. B
19	2	0033.91348	2" X 2" X 1/8" RAIL @ 23'-6" W/ END PLATES	A500 Gr. B
20	12	0033.90405	1-1/2" X 1-1/2" FIX. SPL BAR @ 2' 4"	A572 Gr. 50
21	12	0033.90406	2-1/4" X 3-1/4" FIX. SPL. BAR @ 2' 4"	A572 Gr. 50
22	4	0033.90407	1-1/2" X 1-1/2" EXP. SPL BAR @ 1' 5"	A572 Gr. 50
23	4	0033.90408	2-1/4" X 3-1/4" EXP. SPL. BAR @ 1' 5"	A572 Gr. 50
24	120	0033.00295	3/8" X 2 1/4" X 7 3/8" ANCHOR PLATES	A36
25	242*	0042.05813	Ø 5/8" X 13" ANCHOR STUDS	A449
26	482*	0080.15901	Ø 5/8" HEAVY HEX NUTS	A563
27	240	0080.15911	Ø 5/8" FLAT WASHERS	F436
28	240	0080.15920	Ø 5/8" LOCK WASHERS	ASME D18.2
29	60	0080.05565	Ø 5/8" X 7 1/2" SLOTTED, ROUND HEAD BOLT, NU	
30	60	0080.05585	Ø 5/8" X 8 1/2" SLOTTED, ROUND HEAD BOLT, NU	
31	64	0080.03103	Ø 3/8" X 3" HEX BOLT, NUT, F.W., & L.W.	
32	64	0080.07330	Ø 7/8" X 5 1/2" HEX BOLT, NUT, F.W., & L.W.	
33	60	0033.90068	1/8" ELASTOMERIC PAD	
34	2	0033.90403	APPROACH WALL CONNECTORS	
35	2	0033.90404	TRAILING WALL CONNECTORS	
36	14	-	DELINEATORS (SUPPLIED BY F.R. LaFAYETTE)	

HARDWARE

ITEM #	
29	BOLT BOTTOM RAIL TO POST
30	BOLT TOP RAIL TO POST (IT
31	BOLT BOTTOM SPLICE BARS
32	BOLT TOP SPLICE BARS TO TOP RAIL

T.Y. LIN INTERNATIONAL

THE STAMPED DOCUMENTS ARE HEREBY:

____ APPROVED
_X_ APPROVED AS NOTED
____ REVISE AND RESUBMIT

SEE TRANSMITTAL FOR ADDITIONAL INFORMATION AS APPLICABLE.

THIS REVIEW IS FOR GENERAL CONFORMANCE WITH DESIGN CONCEPT ONLY. ANY DEVIATION FROM THE PLANS OR SPECIFICATIONS NOT CLEARLY NOTED BY THE CONTRACTOR HAS NOT BEEN REVIEWED. REVIEW BY THE ENGINEER SHALL NOT RELIEVE THE CONTRACTOR OF THE CONTRACTUAL RESPONSIBILITY FOR ANY ERRORS OR DEVIATION FROM THE CONTRACT REQUIREMENTS.

RICK HEBERT — REVIEWER
1/16/2015 — DATE

ITEM #: 525.45

STRUCTURAL STEEL TO COMPLY W/ ASTM A6

TOLERANCE UNLESS OTHERWISE NOTED:
FRACTIONS = ± 1/16"
ANGLES = ± 1/2°
DIAMETERS = ± 1/32"

SHEET 1 OF 3

BRIDGE RAIL DETAILS SHEET

VT 121 (CL 2, TH 1) RURAL MAJOR COLLECTOR, BRIDGE 11R
ROCKINGHAM, PROJECT BRF 0126(12), TOWN OF ROCKINGHAM, WINDHAM COUNTY, VT.

REV	NO.	DATE	DESCRIPTION	BY	REV	NO.	DATE	DESCRIPTION	BY

ELDERLEE, INC.
OAKS CORNERS, NEW YORK 14518
E-Mail: dlong@elderlee.com / epeek@elderlee.com
Tel: 315-789-6670 Fax: 315-789-6615

AISC CERTIFIED FABRICATOR

DRAWN	E.P.	12/19/14
CHECKED	D.L.	12/19/14
APPROVED	.	.
SCALE	SCHEMATIC	
DRAWING NO.	FR L - ROCKINGHAM	

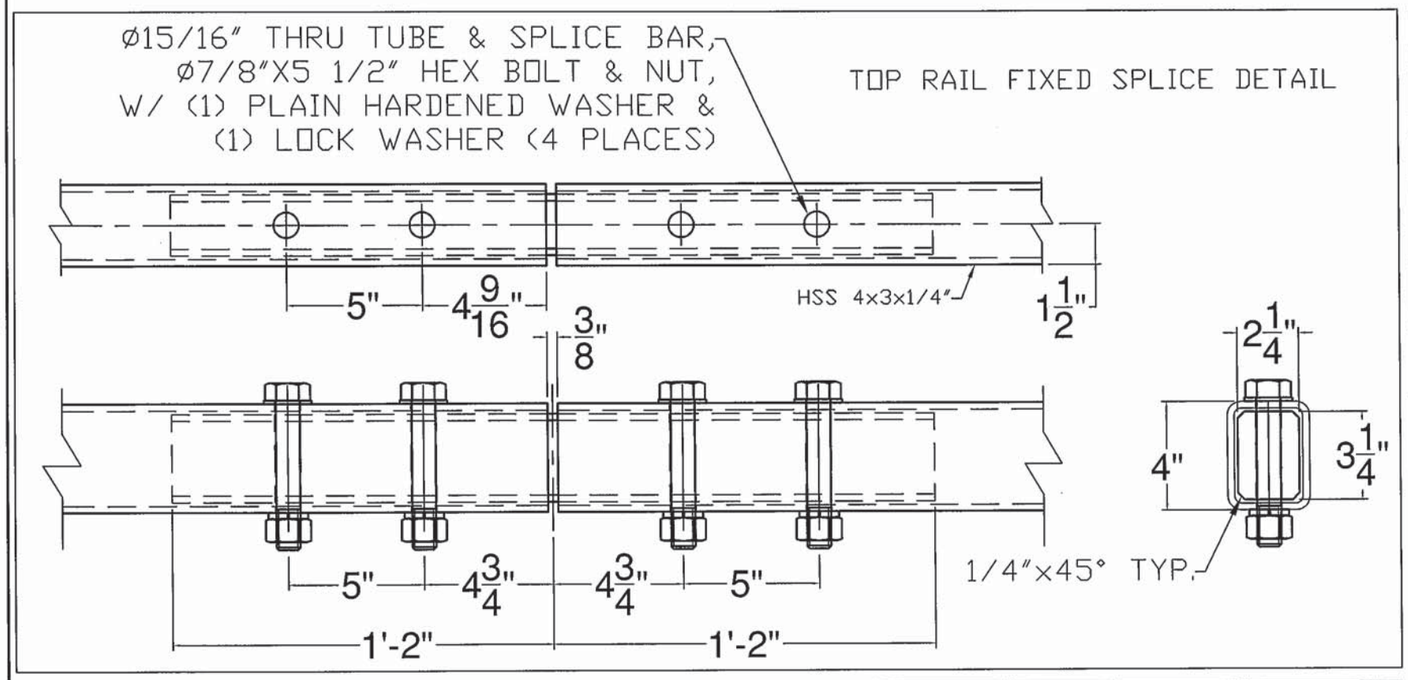

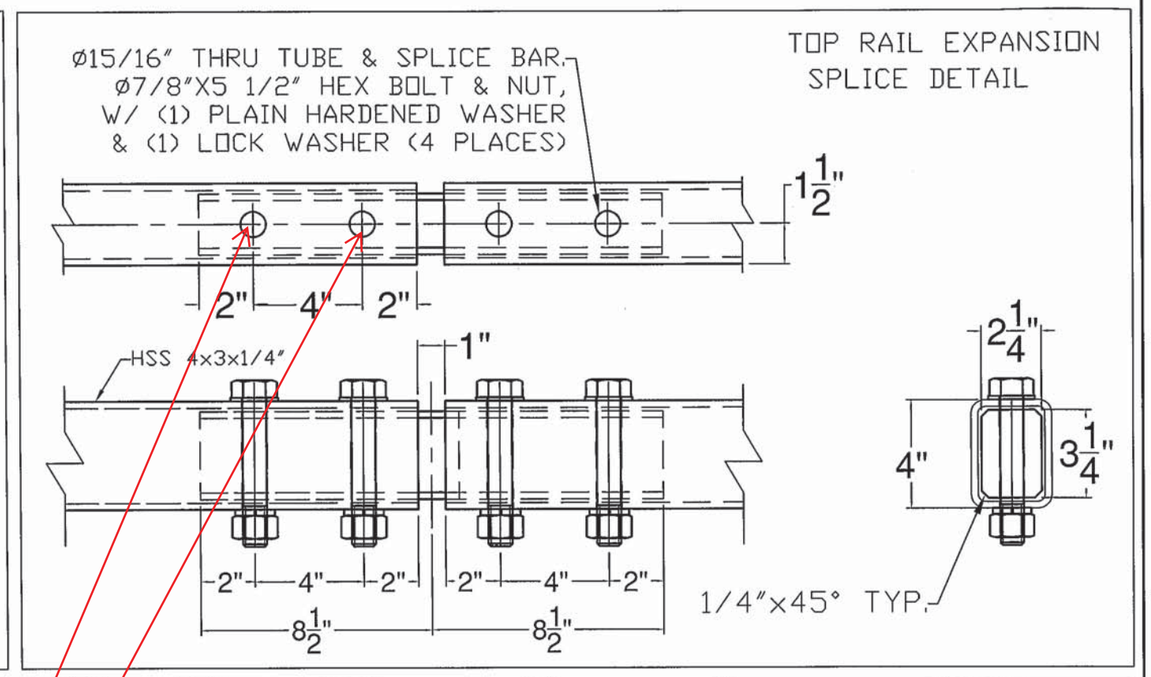

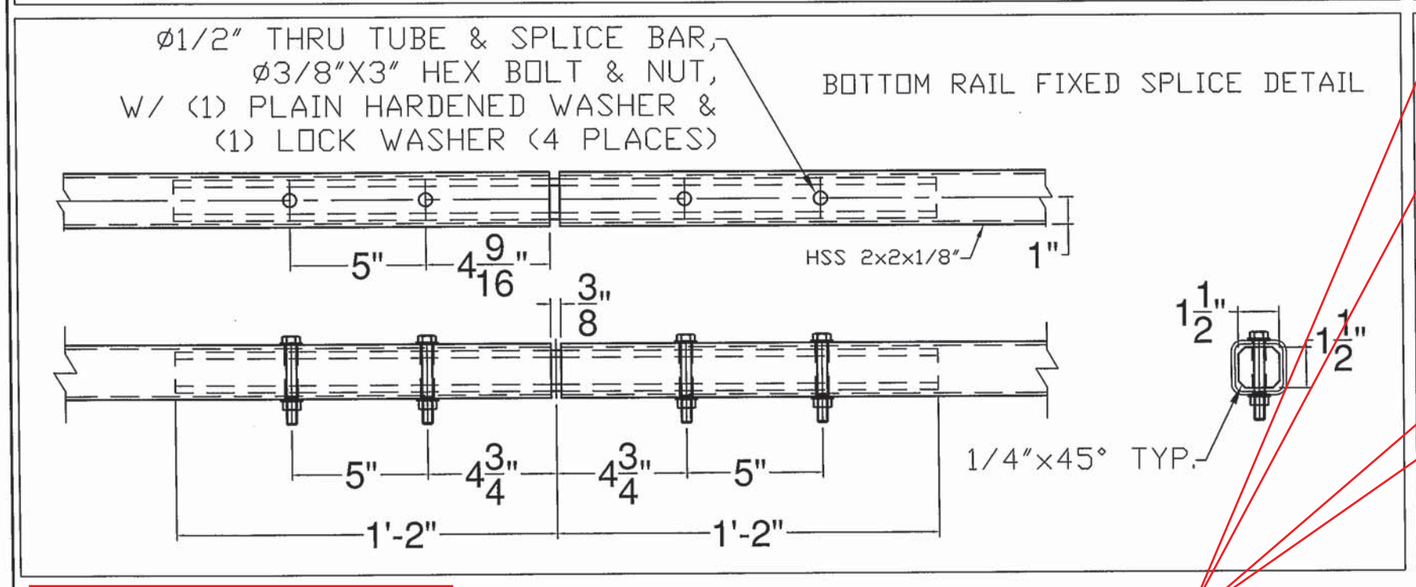

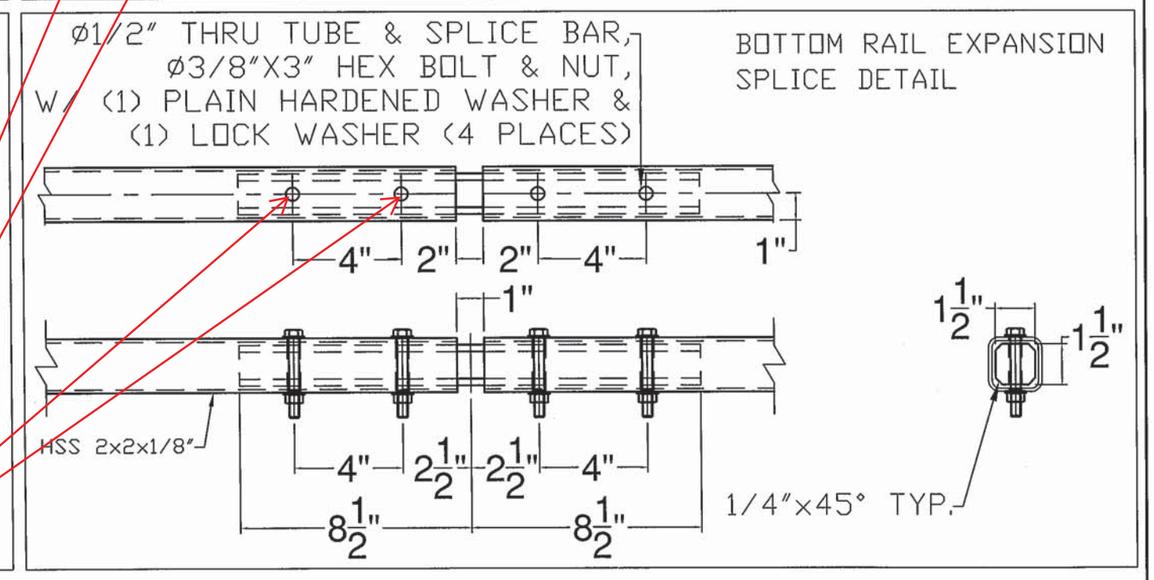

Provide 15/16" x 2" slotted holes in top rail splice bar and 1/2" x 1 1/2" slotted holes in bottom rail splice bars to accommodate movements at expansion rail splices. (Typ)

T.Y. LIN INTERNATIONAL

THE STAMPED DOCUMENTS ARE HEREBY:

____ APPROVED
_X_ APPROVED AS NOTED
____ REVISE AND RESUBMIT

SEE TRANSMITTAL FOR ADDITIONAL INFORMATION AS APPLICABLE.

THIS REVIEW IS FOR GENERAL CONFORMANCE WITH DESIGN CONCEPT ONLY. ANY DEVIATION FROM THE PLANS OR SPECIFICATIONS NOT CLEARLY NOTED BY THE CONTRACTOR HAS NOT BEEN REVIEWED. REVIEW BY THE ENGINEER SHALL NOT RELIEVE THE CONTRACTOR OF THE CONTRACTUAL RESPONSIBILITY FOR ANY ERRORS OR DEVIATION FROM THE CONTRACT REQUIREMENTS.

RICK HEBERT — REVIEWER
1/16/2015 — DATE

Vermont Agency of Transportation

RECEIVED

ON: December 29, 2014

and Checked for

CONFORMANCE

BY: TAS DATE: 01/20/2015

ITEM #: 525.45

SHEET 2 OF 3

STRUCTURAL STEEL TO COMPLY W/ ASTM A6

TOLERANCE UNLESS OTHERWISE NOTED:
FRACTIONS = ± 1/16"
ANGLES = ± 1/2°
DIAMETERS = ± 1/32"

BRIDGE RAIL DETAILS SHEET

VT 121 (CL 2, TH 1) RURAL MAJOR COLLECTOR, BRIDGE 11R
ROCKINGHAM, PROJECT BRF 0126(12), TOWN OF ROCKINGHAM, WINDHAM COUNTY, VT.

REV	NO.	DATE	DESCRIPTION	BY	REV	NO.	DATE	DESCRIPTION	BY

ELDERLEE, INC.
OAKS CORNERS, NEW YORK 14518
E-Mail: dlong@elderlee.com / epeek@elderlee.com
Tel: 315-789-6670 Fax: 315-789-6615

CERTIFIED FABRICATOR

DRAWN	E.P.	12/19/14
CHECKED	D.L.	12/19/14
APPROVED	.	.
SCALE	SCHEMATIC	
DRAWING NO.	FR L - ROCKINGHAM	

BILL OF MATERIALS			
ITEM #	QTY	DESCRIPTION	ASTM #
1	1	DBL TUBE WALL PLATE - 1' X 10' x 25'	ASTM A572 Gr. 50
2	10	RAW, ø5/8' REBAR @ 36'	A615, Gr. 60
3	2	5' X 5' X 5/16' TUBE W/ SLOTS @ 18'	ASTM A500 Gr. B
4	2	SHIM PL 1/2" X 4' X 17' W/ SLOTS	ASTM A36(ASTM A709 Gr. 36)
5	2	SHIM PL 1/2" X 4' X 17' (W/O SLOTS)	ASTM A36(ASTM A709 Gr. 36)

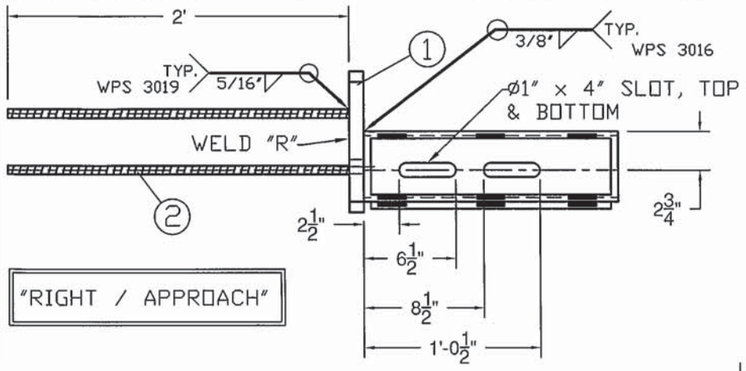

PROTRUSIONS CAUSED BY WELDING OR GALVANIZING ARE NOT PERMITTED ON THE SPLICE TUBES AND FILL PLATES

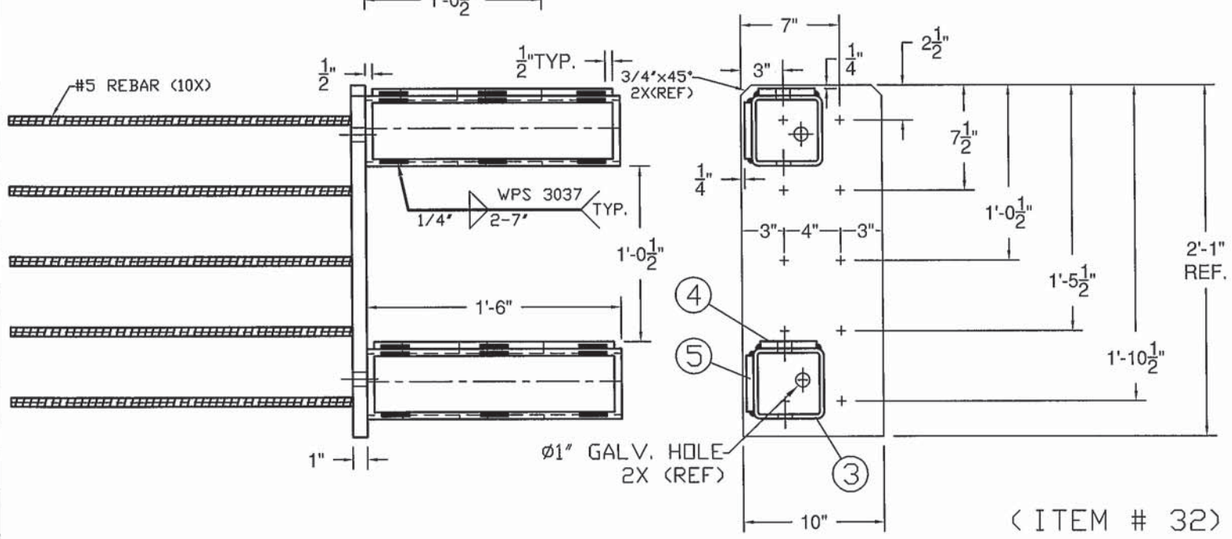

(ITEM # 32)

BILL OF MATERIALS			
ITEM #	QTY	DESCRIPTION	ASTM #
1	1	DBL TUBE WALL PLATE - 1' X 10' x 25'	ASTM A572 Gr. 50
2	10	RAW, ø5/8' REBAR @ 36'	A615, Gr. 60
3	2	5' X 5' X 5/16' TUBE W/ SLOTS @ 18'	ASTM A500 Gr. B
4	2	SHIM PL 1/2" X 4' X 17' W/ SLOTS	ASTM A709 Gr. 36
5	2	SHIM PL 1/2" X 4' X 17' (W/O SLOTS)	ASTM A709 Gr. 36

PROTRUSIONS CAUSED BY WELDING OR GALVANIZING ARE NOT PERMITTED ON THE SPLICE TUBES AND FILL PLATES

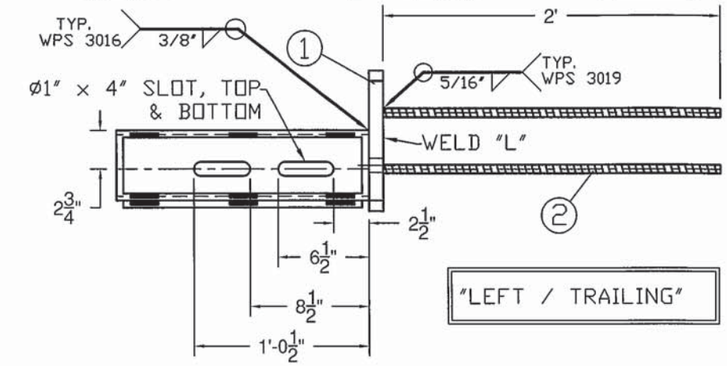

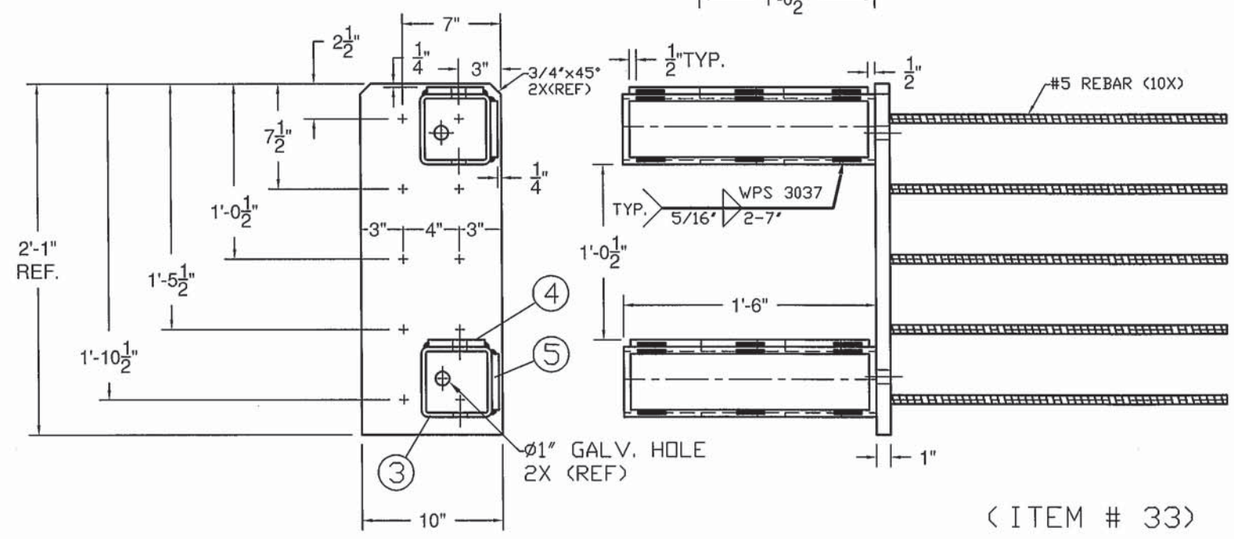

(ITEM # 33)

Vermont Agency of Transportation

RECEIVED

ON: December 29, 2014

and Checked for

CONFORMANCE

BY: TAS DATE: 01/20/2015

T.Y. LIN INTERNATIONAL

THE STAMPED DOCUMENTS ARE HEREBY:

____ APPROVED
_X_ APPROVED AS NOTED
____ REVISE AND RESUBMIT

SEE TRANSMITTAL FOR ADDITIONAL INFORMATION AS APPLICABLE.

THIS REVIEW IS FOR GENERAL CONFORMANCE WITH DESIGN CONCEPT ONLY. ANY DEVIATION FROM THE PLANS OR SPECIFICATIONS NOT CLEARLY NOTED BY THE CONTRACTOR HAS NOT BEEN REVIEWED. REVIEW BY THE ENGINEER SHALL NOT RELIEVE THE CONTRACTOR OF THE CONTRACTUAL RESPONSIBILITY FOR ANY ERRORS OR DEVIATION FROM THE CONTRACT REQUIREMENTS.

RICK HEBERT — REVIEWER
1/16/2015 — DATE

ITEM #: 525.45

SHEET 3 OF 3

STRUCTURAL STEEL TO COMPLY W/ ASTM A6

TOLERANCE UNLESS OTHERWISE NOTED:
FRACTIONS = ± 1/16"
ANGLES = ± 1/2°
DIAMETERS = ± 1/32"

BRIDGE RAIL DETAILS SHEET

VT 121 (CL 2, TH 1) RURAL MAJOR COLLECTOR, BRIDGE 11R
ROCKINGHAM, PROJECT BRF 0126(12), TOWN OF ROCKINGHAM, WINDHAM COUNTY, VT.

REV	NO.	DATE	DESCRIPTION	BY	REV	NO.	DATE	DESCRIPTION	BY

ELDERLEE, INC.
OAKS CORNERS, NEW YORK 14518
E-Mail: dlong@elderlee.com / epeek@elderlee.com
Tel: 315-789-6670 Fax: 315-789-6615

CERTIFIED FABRICATOR

DRAWN	E.P.	12/19/14
CHECKED	D.L.	12/19/14
APPROVED	.	.
SCALE	SCHEMATIC	
DRAWING NO.	FR L - ROCKINGHAM	

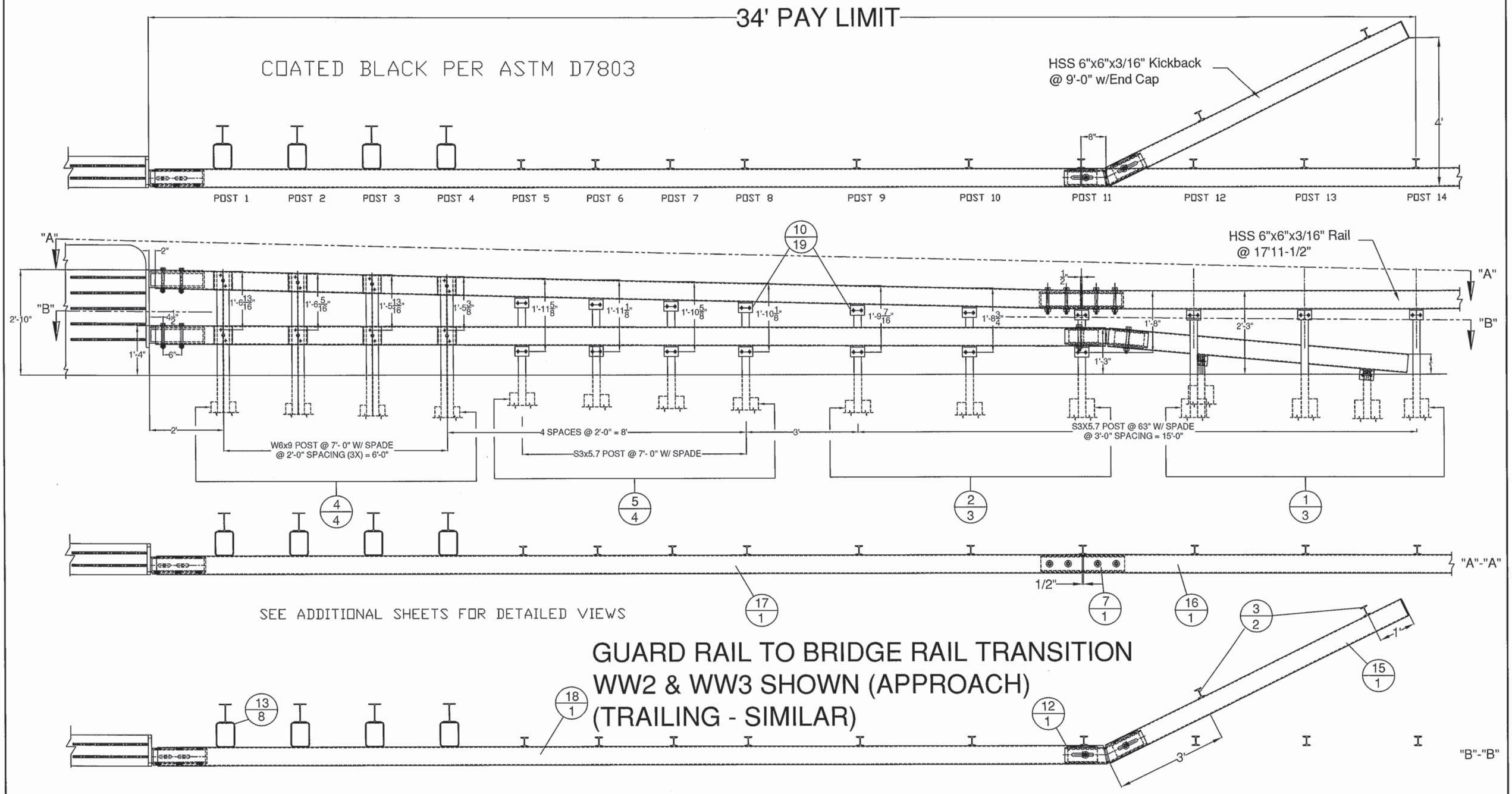

GUARD RAIL TO BRIDGE RAIL TRANSITION
WW2 & WW3 SHOWN (APPROACH)
(TRAILING - SIMILAR)

Vermont Agency of Transportation
RECEIVED
ON: December 29, 2014
and Checked for
CONFORMANCE
BY: TAS DATE: 01/20/2015

ITEM #: 621.72

SHEET 1 OF 5

STRUCTURAL STEEL TO COMPLY W/ ASTM A6

TOLERANCE UNLESS OTHERWISE NOTED:
FRACTIONS = ± 1/16"
ANGLES = ± 1/2°
DIAMETERS = ± 1/32"

GRAS, GLV 2 RAIL BOX BEAM
EM14-192, VT 121 (CL 2, TH 1) RURAL MAJOR COLLECTOR, BRIDGE NO : 11R
PROJECT: ROCKINGHAM BRF 0126(12), TOWN OF ROCKINGHAM, WINDHAM COUNTY, VT

REV	NO.	DATE	DESCRIPTION	BY	REV	NO.	DATE	DESCRIPTION	BY

ELDERLEE, INC.
OAKS CORNERS, NEW YORK 14518
E-Mail: dlong@elderlee.com / epeek@elderlee.com
Tel: 315-789-6670 Fax: 315-789-6615

CERTIFIED FABRICATOR

DRAWN	E.P.	12/24/14
CHECKED	D.L.	.
APPROVED	M.V.	.
SCALE	SCHEMATIC	
DRAWING NO.	FR L - ROCKINGHAM-T	

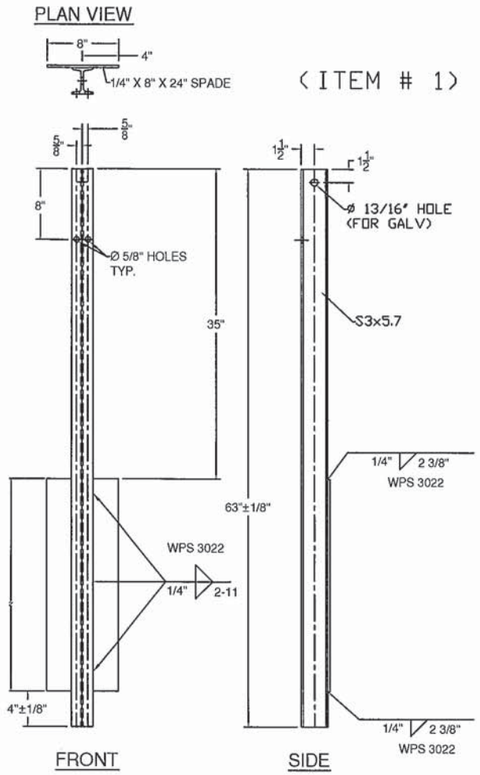

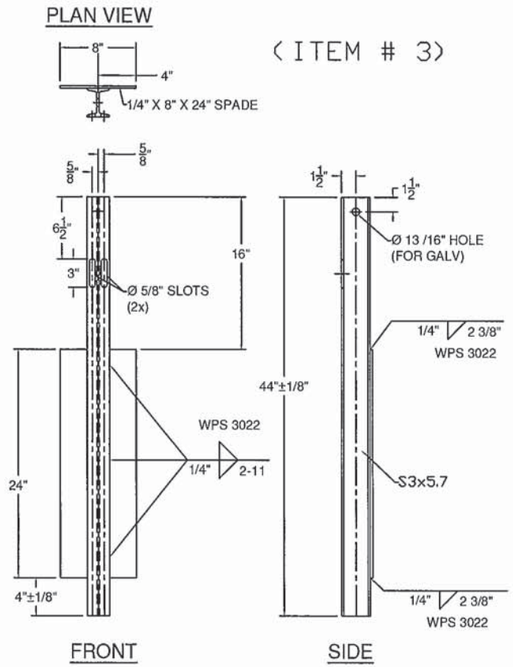

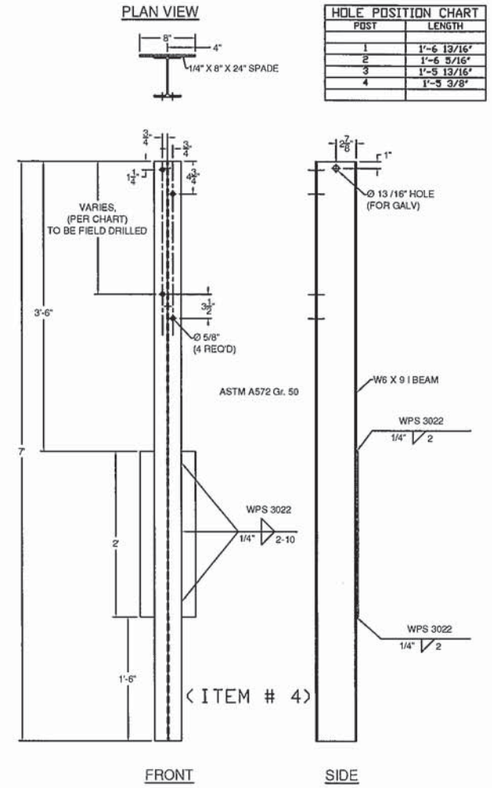

HOLE POSITION CHART	
POST	LENGTH
1	1'-6 13/16"
2	1'-6 5/16"
3	1'-5 13/16"
4	1'-3 3/8"

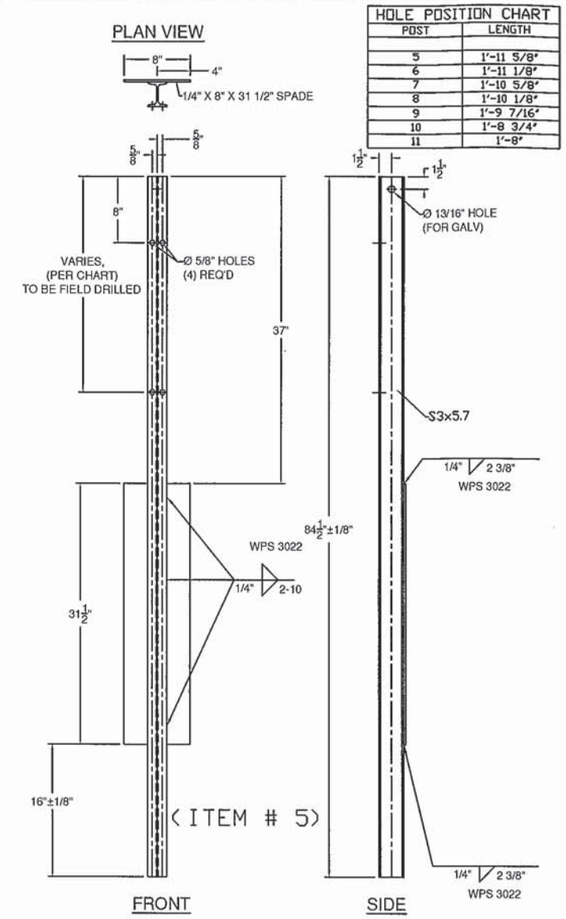

HOLE POSITION CHART	
POST	LENGTH
5	1'-11 5/8"
6	1'-11 1/8"
7	1'-10 5/8"
8	1'-10 1/8"
9	1'-9 7/16"
10	1'-8 3/4"
11	1'-8"

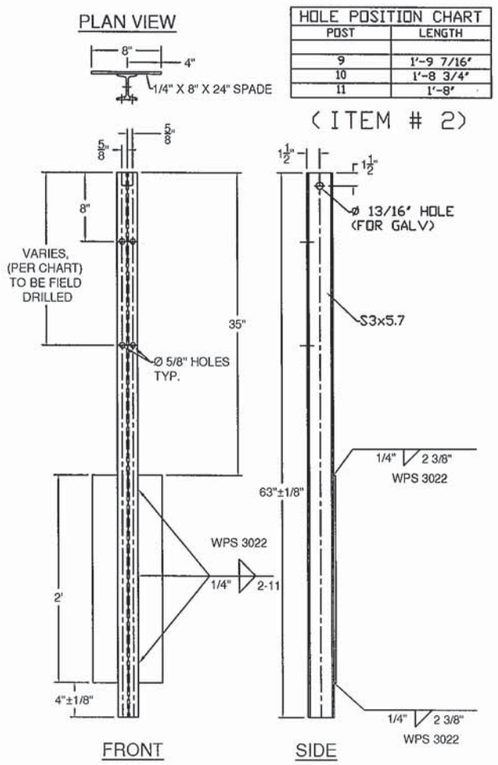

HOLE POSITION CHART	
POST	LENGTH
9	1'-9 7/16"
10	1'-8 3/4"
11	1'-8"

GENERAL NOTES:

1) ALL RAILING IS TO BE FABRICATED AND ERECTED ACCORDING TO SECTION 525 OF THE STANDARD SPECIFICATIONS.
2) BOLTS SHALL BE TORQUED SNUG TIGHT (APPROXIMATELY 100 FT-LB).
3) PROTRUSIONS CAUSED BY WELDING OR GALVANIZING ARE NOT PERMITTED ON THE ADJOINING SURFACES OF THE BOX BEAM RAILS, SPLICE TUBES AND FILL PLATES.
4) BOX BEAM TUBE AND STEEL POST MATERIALS, DIMENSION SIZES AND NOTES SHALL BE THE SAME AS THOSE OF THE BRIDGE RAIL, UNLESS OTHERWISE NOTED.
5) ANY BENDING OF RAIL SHALL BE DONE AT THE FABRICATION PLANT. RADII GREATER THAN 16' TO BE CURVED ON A TUBE BENDING MACHINE, RADII LESS THAN 16' TO BE "PIE CUT" AND WELDED. CURVED RAILING WILL HAVE AN 18" LENGTH ON EACH END STRAIGHT TO ACCOMADATE SPLICES.
6) ALL STEEL COMPONENTS SHALL BE COATED BLACK IN ACCORDANCE WITH ASTM D7803 FOLLOWING GALVANIZING.

BILL OF MATERIALS, EACH CORNER

ITEM #	QTY.	COMPONENT #	DESCRIPTION	MATERIAL (ASTM)
1	3	0013.57021	3' I-POST, PUNCH 8' W/SPD @ 63' LG	ASTM A572 Gr. 50
2	3	0013.57025	3' I-POST W/SPD @ 63', PUNCH 8', & 20' & HOLES @ VARIOUS	ASTM A572 Gr. 50
3	2	0013.57060	3' I-END POST W/SPD @ 3'-8' LG	ASTM A572 Gr. 50
4	4	-	W6X9 POST @ 7' W/SPD & 5/8' HOLES @ VARIOUS	ASTM A572 Gr. 50
5	4	-	3' I-POST, PUNCH 8' & VARIOUS', W/8X32' SPADE @ 7'	ASTM A572 Gr. 50
7	1	0033.00640	HSS 5X5 TUBE SPLICE @ 27' LG W/ 1/4' SHIMS	A500 Gr. B / A572 Gr 50
10	19	0054.00050	REG BB SHELF ANGLES @ 4-1/2'	ASTM A36
12	1	-	HSS 5X5 DBL BEND TUBE SPL @ 27' LG	A500 Gr. B / A572 Gr 50
13	8	0054.00563	6X8' TRANS. TUBE B/□ @ 6' LG	A500 Gr. B
15	1	0054.09000	6X6' BB @ 9'-0' KICKBACK, W/ CAP	A500 Gr. B / A36
16	1	0054.18000	6X6' BB @ 17'-11 1/2', DRILL 3' CC	A500 Gr. B
17	1	-	6X6' BB TOP TRANS @ 24'-9 3/4' LG W/EXP END	A500 Gr. B
18	1	-	6X6' BB BTM TRANS @ 25'-5 1/2' LG W/EXP END	A500 Gr. B
19	18	0080.03355	Ø3/8' X 7 1/2' BOLT, NUT, & 2 FW	A307
20	19	0080.04100	Ø1/2' x 1-1/2' BOLT, NUT, & FW	A307
21	16	0080.04120	Ø1/2' x 1-1/2' BOLT, NUT, 2 FW & LW	A307
23	10	0080.06340	Ø3/4' X 7-1/2' BOLT, NUT, 2 FW	A325, A563, F436
24	8	0080.06370	Ø3/4' X 8' CARR BOLT, NUT, FW & LW	A307
25	1		Ø3/4' THREADED ROD @ 14', NUT & FW (S.E. CORNER TURNBACK)	A449, A563, F436

Vermont Agency of Transportation

RECEIVED

ON: December 29, 2014

and Checked for

CONFORMANCE

BY: TAS DATE: 01/20/2015

HARDWARE NOTES

ITEM #	FUNCTION
19	BOLT RAIL TO SHELF ANGLE (ITEM #10)
20	BOLT SHELF ANGLE (ITEM # 10) TO POST
21	BOLT BLOCK-OUTS (ITEM # 13) TO HEAVY POST (ITEM # 4)
23	SPLICE TUBING (ITEM #'S 7 & 12), & (4) PER PARAPET WALL CONNECTION
24	BOLT RAIL (ITEMS #'S 17, & 18 TO BLOCK-OUTS (ITEM # 13)

ITEM #: 621.72

SHEET 2 OF 5

STRUCTURAL STEEL TO COMPLY W/ ASTM A6

TOLERANCE UNLESS OTHERWISE NOTED:
FRACTIONS = ± 1/16"
ANGLES = ± 1/2°
DIAMETERS = ± 1/32"

GRAS, GLV 2 RAIL BOX BEAM

EM14-192, VT 121 (CL 2, TH 1) RURAL MAJOR COLLECTOR, BRIDGE NO : 11R
PROJECT: ROCKINGHAM BRF 0126(12), TOWN OF ROCKINGHAM, WINDHAM COUNTY, VT

REV	NO.	DATE	DESCRIPTION	BY	REV	NO.	DATE	DESCRIPTION	BY

ELDERLEE, INC.
OAKS CORNERS, NEW YORK 14518
E-Mail: dlong@elderlee.com / epeek@elderlee.com
Tel: 315-789-6670 Fax: 315-789-6615

AISC CERTIFIED FABRICATOR

DRAWN	E.P.	12/24/14
CHECKED	D.L.	.
APPROVED	M.V.	.
SCALE	SCHEMATIC	
DRAWING NO.	FR L - ROCKINGHAM-T	

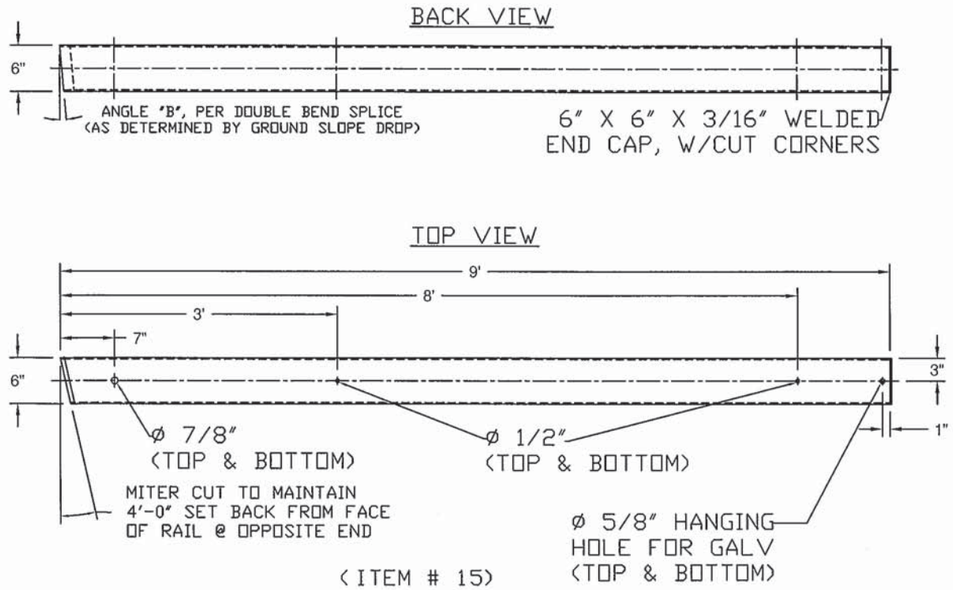

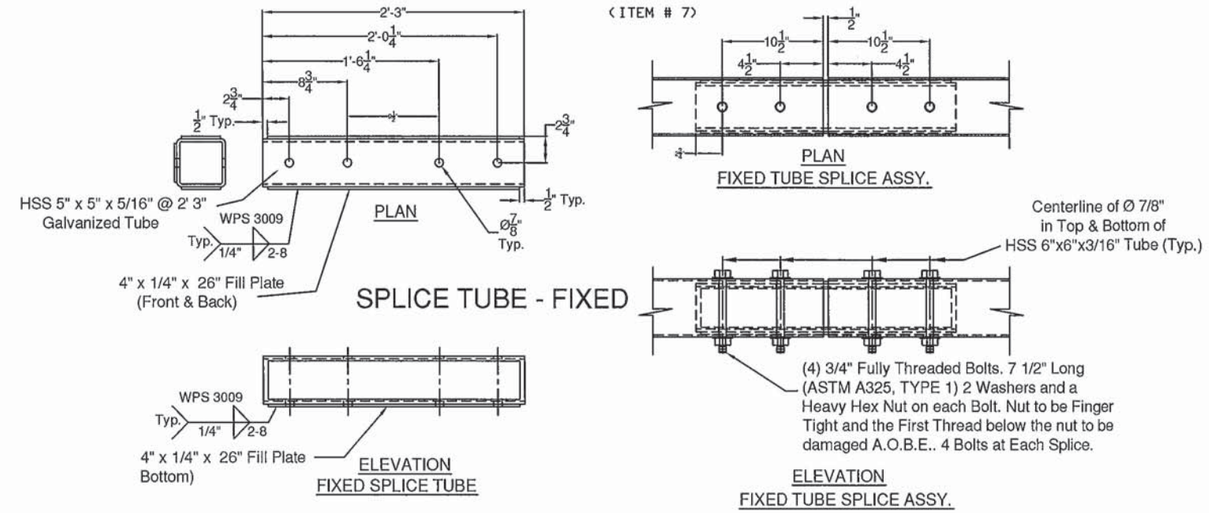

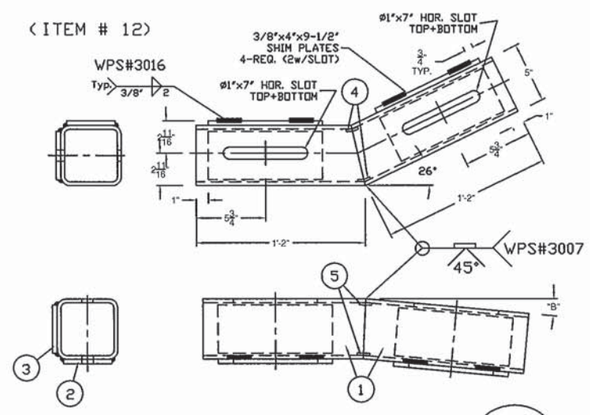

DOUBLE BEND TUBE SPLICE		
ITEM#	QTY.	DESCRIPTION
1	1	9' X 5' X 5/16' TUBE @ 26 3/4'
2	2	3/8' X 4' X 9 1/2' W/ SLOTS-ASTM A709 Gr36
3	2	3/8' X 4' X 3 1/2' W/O SLOTS-ASTM A709 Gr36
4	2	3/16' X 1' X 3 5/8' BACKER PLATE, FORMED
5	2	3/16' X 1' X 4' BACKER PLATE

'B' - TURN DOWN ANGLE SET BY THE 9' MEASURMENT
AT THE END OF THE BOX BEAM.

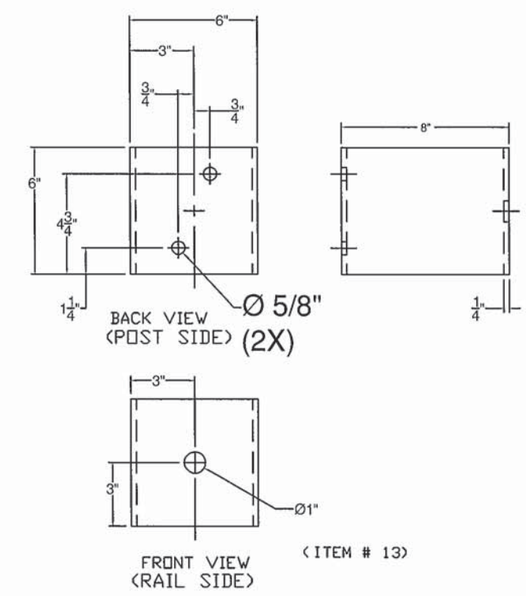

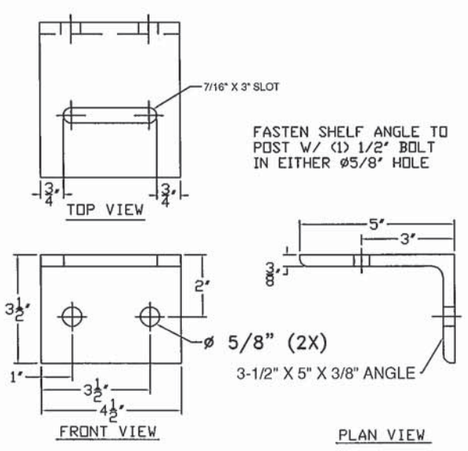

Vermont Agency of Transportation

RECEIVED

ON: December 29, 2014

and Checked for

CONFORMANCE

BY: TAS DATE: 01/20/2015

ITEM #: 621.72

SHEET 3 OF 5

STRUCTURAL STEEL TO COMPLY W/ ASTM A6

TOLERANCE UNLESS OTHERWISE NOTED:
FRACTIONS = ± 1/16"
ANGLES = ± 1/2°
DIAMETERS = ± 1/32"

GRAS, GLV 2 RAIL BOX BEAM

EM14-192, VT 121 (CL 2, TH 1) RURAL MAJOR COLLECTOR, BRIDGE NO : 11R
PROJECT: ROCKINGHAM BRF 0126(12), TOWN OF ROCKINGHAM, WINDHAM COUNTY, VT

REV	NO.	DATE	DESCRIPTION	BY	REV	NO.	DATE	DESCRIPTION	BY

ELDERLEE, INC.
OAKS CORNERS, NEW YORK 14518
E-Mail: dlong@elderlee.com / epeek@elderlee.com
Tel: 315-789-6670 Fax: 315-789-6615

AISC CERTIFIED FABRICATOR

DRAWN	E.P.	12/24/14
CHECKED	D.L.	.
APPROVED	M.V.	.
SCALE	SCHEMATIC	
DRAWING NO.	FR L - ROCKINGHAM-T	

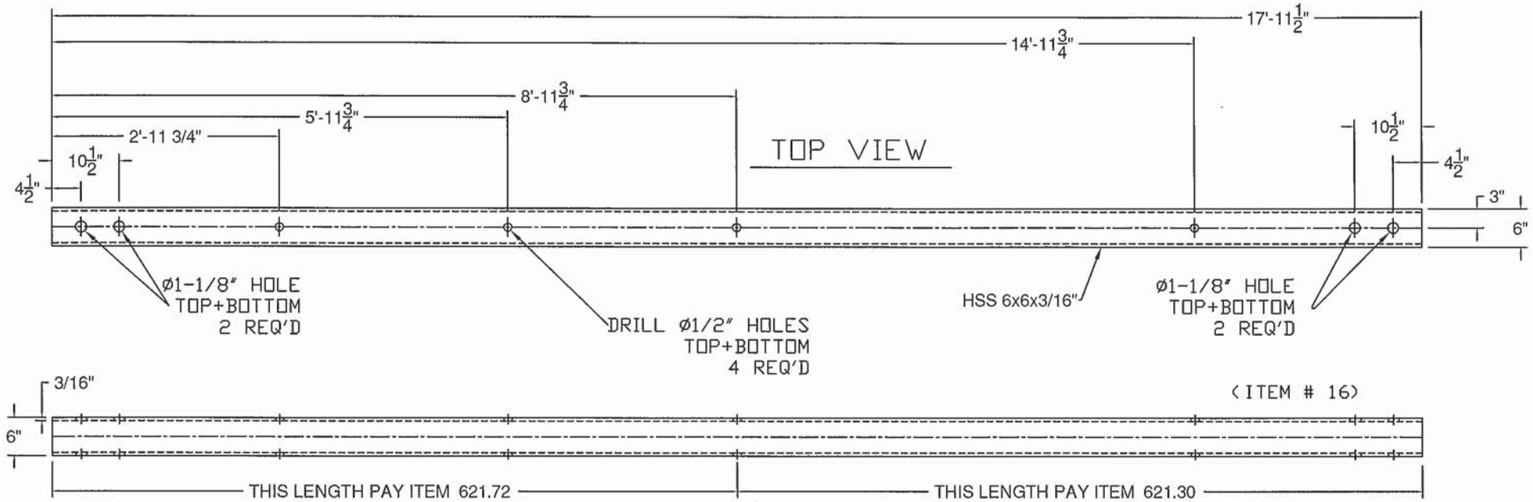

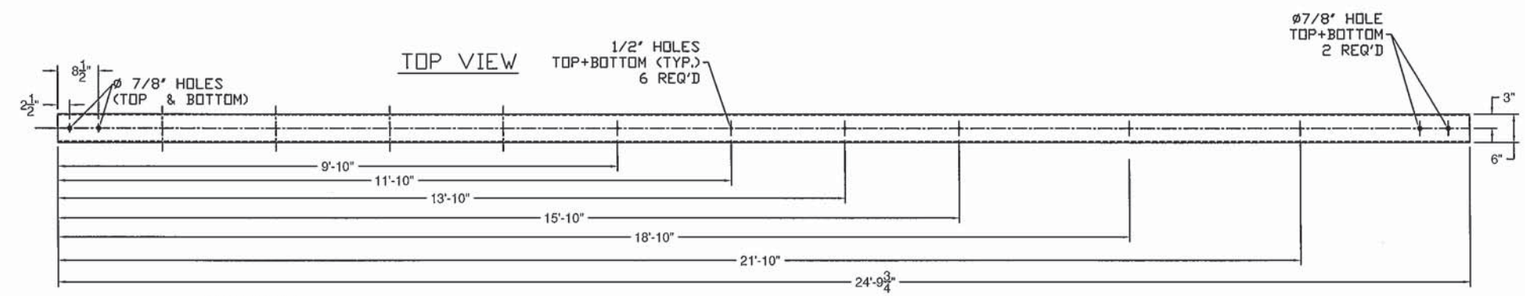

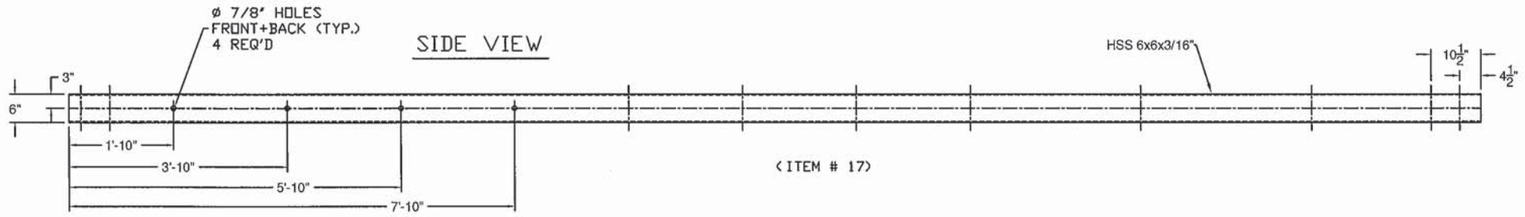

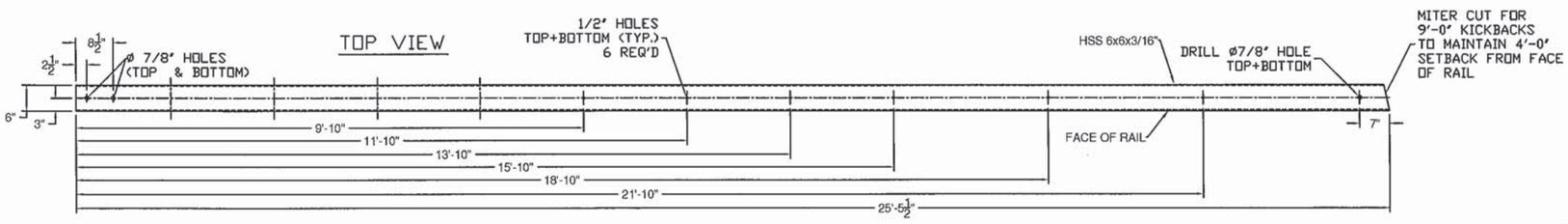

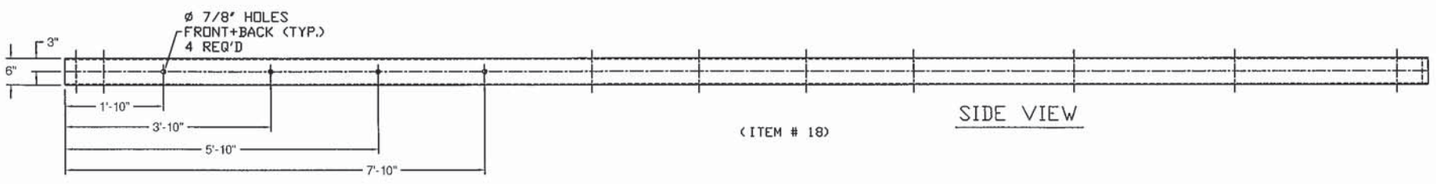

Vermont Agency of Transportation

RECEIVED

ON: December 29, 2014

and Checked for

CONFORMANCE

BY: TAS DATE: 01/20/2015

ITEM #: 621.72

SHEET 4 OF 5

STRUCTURAL STEEL TO COMPLY W/ ASTM A6

TOLERANCE UNLESS OTHERWISE NOTED:
FRACTIONS = ± 1/16"
ANGLES = ± 1/2°
DIAMETERS = ± 1/32"

GRAS, GLV 2 RAIL BOX BEAM

EM14-192, VT 121 (CL 2, TH 1) RURAL MAJOR COLLECTOR, BRIDGE NO : 11R
PROJECT: ROCKINGHAM BRF 0126(12), TOWN OF ROCKINGHAM, WINDHAM COUNTY, VT

REV	NO.	DATE	DESCRIPTION	BY	REV	NO.	DATE	DESCRIPTION	BY

ELDERLEE, INC.
OAKS CORNERS, NEW YORK 14518
E-Mail: dlong@elderlee.com / epeek@elderlee.com
Tel: 315-789-6670 Fax: 315-789-6615

AISC CERTIFIED FABRICATOR

DRAWN	E.P.	12/24/14
CHECKED	D.L.	.
APPROVED	M.V.	.
SCALE	SCHEMATIC	
DRAWING NO.	FR L - ROCKINGHAM-T	

NOTE: S.E. CORNER, BOTTOM RAIL TURNBACK (ITEM #15) - SUPPLIED @ STD 9'-0" LENGTH W/ WELDED END CAP. CUT & DRILL SPLICE END TO MATCH FIELD REQUIREMENTS.

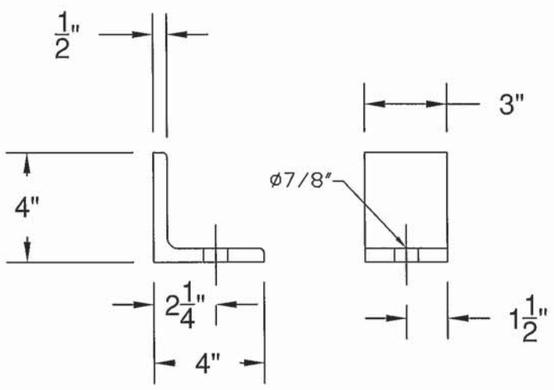

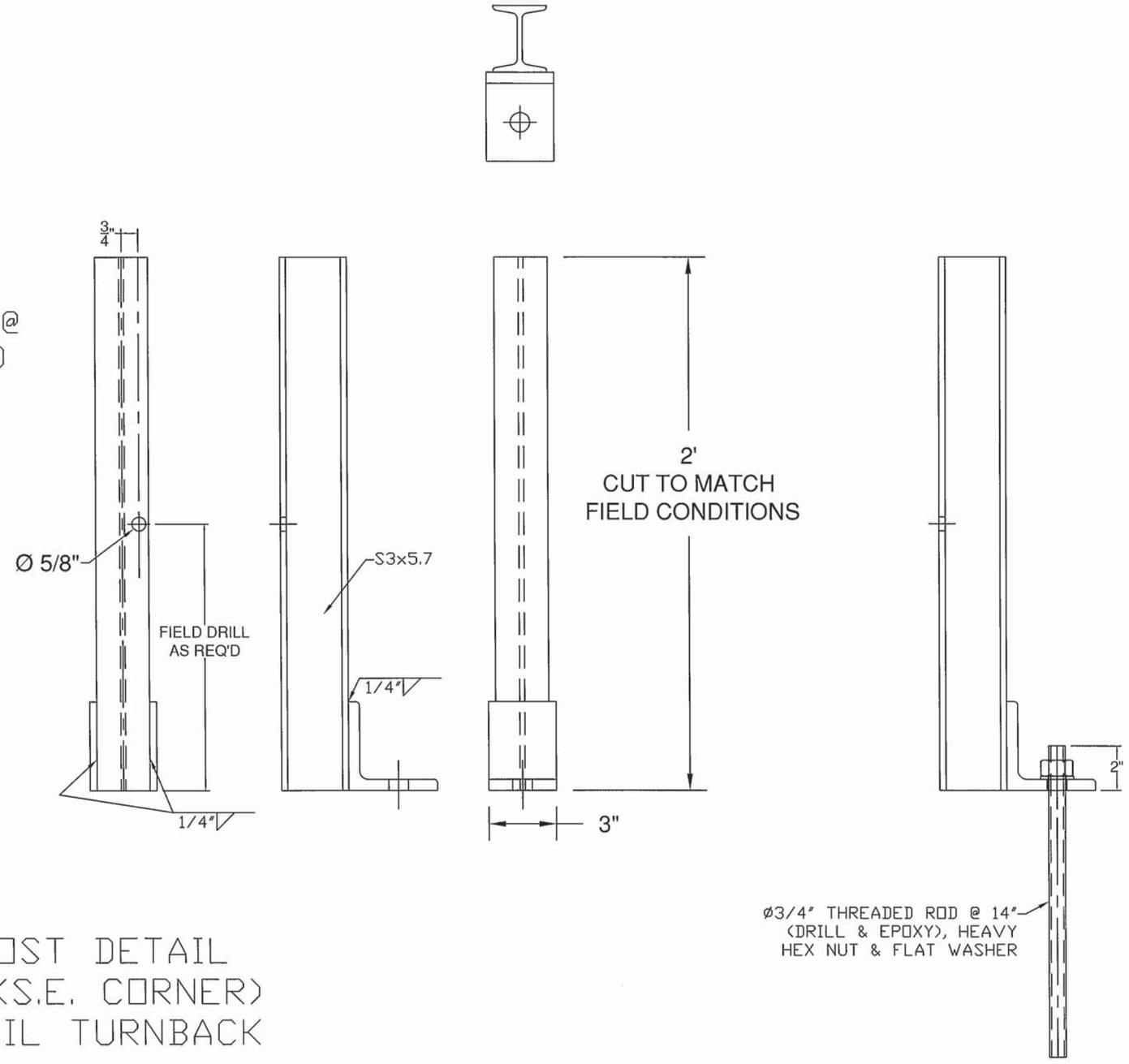

SPECIAL POST DETAIL
FOR WW3 (S.E. CORNER)
BOTTOM RAIL TURNBACK

Vermont Agency of Transportation
RECEIVED
ON: December 29, 2014
and Checked for
CONFORMANCE
BY: TAS DATE: 01/20/2015

ITEM #: 621.72

SHEET 5 OF 5

STRUCTURAL STEEL TO COMPLY W/ ASTM A6

TOLERANCE UNLESS OTHERWISE NOTED:
FRACTIONS = ± 1/16"
ANGLES = ± 1/2°
DIAMETERS = ± 1/32"

GRAS, GLV 2 RAIL BOX BEAM

EM14-192, VT 121 (CL 2, TH 1) RURAL MAJOR COLLECTOR, BRIDGE NO : 11R
PROJECT: ROCKINGHAM BRF 0126(12), TOWN OF ROCKINGHAM, WINDHAM COUNTY, VT

REV	NO.	DATE	DESCRIPTION	BY	REV	NO.	DATE	DESCRIPTION	BY

ELDERLEE, INC.
OAKS CORNERS, NEW YORK 14518
E-Mail: dlong@elderlee.com / epeek@elderlee.com
Tel: 315-789-6670 Fax: 315-789-6615

AISC CERTIFIED FABRICATOR

DRAWN	E.P.	12/24/14
CHECKED	D.L.	.
APPROVED	M.V.	.
SCALE	SCHEMATIC	
DRAWING NO.	FR L - ROCKINGHAM-T	

WELDING PROCEDURE SPECIFICATION

PQR ELDERLEE#3

Material Specification	A500 GR B to A572 GR 50
Welding Process	FCAW-G
Manual or Machine	SEMAUTOMATIC
Position of Welding	FLAT/HORIZONTAL
Filler Metal Specification	A5.29
Filler Metal Classification	E81T1-Ni1C-JH4
Flux	N/A
Shielding Gas	CO 2 Dew Point -40DEG F Flow Rate 50CFH
Single or Multiple Pass	SINGLE
Single or Multiple Arc	SINGLE
Welding Current	DC
Polarity	REVERSE ELECTRODE POSITIVE
Welding Progression	STRINGER
Root Treatment	PER D1.5
Preheat and Interpass Temperature	PER D1.5
Postheat Temperature	NONE
Heat Input	Min _____ Max _____

WELDING PROCEDURE

Pass no.	Electrode size	Welding Current Amperes	Welding Current Volts	Travel speed	Joint detail
1	1/16	310	25	11	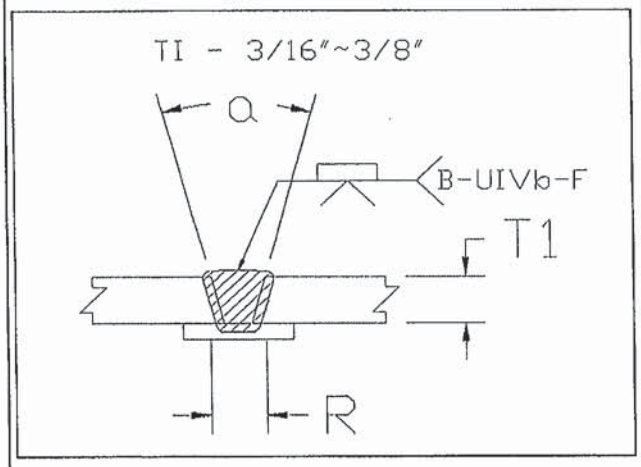
Variable	LIMITS	341 TO 269	27 TO 23	12 TO 10	

This procedure may vary due to fabrication sequence, fit-up, pass size, etc., within the limitation of variables given in Section 5.

Procedure No. 3007

Revision No. _____

Contractor Elderlee, Inc.

Authorized By RANDY SCOTT

Date 7/28/2014

Vermont Agency of Transportation
FRL-Rockingham - 2015-1-16 TYLI Reviewed AAA.pdf
RECEIVED
ON: December 29, 2014
and Checked for
CONFORMANCE
BY: TAS DATE: 01/20/2015

WELDING PROCEDURE SPECIFICATION

PQR ELDERLEE #3

Material Specification	A709 TO A500 GR B
Welding Process	FCAW-G
Manual or Machine	SEMAUTOMATIC
Position of Welding	FLAT/HORIZONTAL
Filler Metal Specification	A5.29
Filler Metal Classification	E81T1-Ni1C-JH4
Flux	N/A
Shielding Gas	CO 2 Dew Point -40DEG F Flow Rate 50CFH
Single or Multiple Pass	SINGLE
Single or Multiple Arc	SINGLE
Welding Current	DC
Polarity	REVERSE ELECTRODE POSITIVE
Welding Progression	STRINGER
Root Treatment	D1.5
Preheat and Interpass Temperature	D1.5
Postheat Temperature	NONE
Heat Input	Min _____ Max _____

WELDING PROCEDURE

Pass no.	Electrode size	Welding Current Amperes	Welding Current Volts	Travel speed	Joint detail
1	1/16	310	25	11	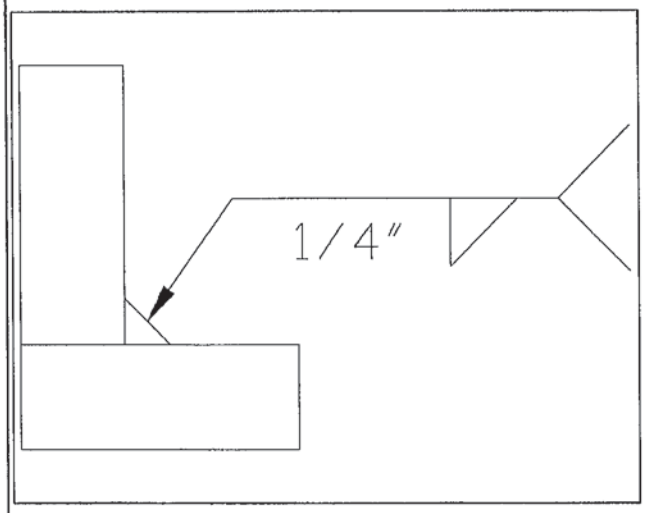
Variable	LIMITS	341 TO 269	27 TO 23	12 TO 10	

This procedure may vary due to fabrication sequence, fit-up, pass size, etc., within the limitation of variables given in Section 5.

Procedure No. 3009

Revision No. _____

Contractor Elderlee, Inc.

Authorized By RANDY SCOTT

Date 3/20/2014

Vermont Agency of Transportation
FRL-Rockingham - 2015-5-16 TYU Reviewed AAN.pdf
RECEIVED
ON: December 29, 2014
and Checked for
CONFORMANCE
BY: TAS DATE: 01/20/2015

WELDING PROCEDURE SPECIFICATION

PQR ELDERLEE #3

Material Specification	A500 TO A572 GR 50
Welding Process	FCAW-G
Manual or Machine	SEMAUTOMATIC
Position of Welding	FLAT/HORIZONTAL
Filler Metal Specification	A5.29
Filler Metal Classification	E81T1-Ni1C-JH4
Flux	N/A
Shielding Gas	CO 2 Dew Point -40DEG F Flow Rate 50CFH
Single or Multiple Pass	SINGLE
Single or Multiple Arc	SINGLE
Welding Current	DC
Polarity	REVERSE
Welding Progression	STRINGER
Root Treatment	PER D1.5
Preheat and Interpass Temperature	PER D1.5
Postheat Temperature	NONE
Heat Input	Min _____ Max _____

WELDING PROCEDURE

Pass no.	Electrode size	Welding Current Amperes	Welding Current Volts	Travel speed	Joint detail
1	1/16	310	25	11	
Variable	LIMITS	341 TO 269	27 TO 23	12 TO 10	

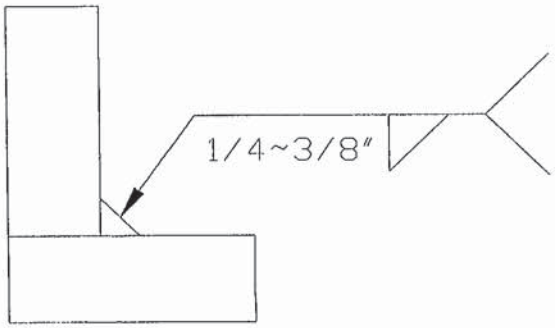

This procedure may vary due to fabrication sequence, fit-up, pass size, etc., within the limitation of variables given in Section 5.

Procedure No. 3016

Revision No. _____

Contractor Elderlee, Inc.

Authorized By RANDY SCOTT

Date 8/4/2014

Vermont Agency of Transportation
FRL-Rockingham - 2015-1-16 TYJ Reviewed AAN.pdf
RECEIVED
ON: December 29, 2014
and Checked for
CONFORMANCE
BY: TAS DATE: 01/20/2015

WELDING PROCEDURE SPECIFICATION

Material Specification	A572 GR 50
Welding Process	GMAW
Manual or Machine	SEMIAUTOMATIC/ROBOTIC
Position of Welding	FLAT/HORIZONTAL
Filler Metal Specification	A5.18
Filler Metal Classification	L-56 LINCOLN
Flux	N/A
Shielding Gas	90% ARGON /10% CO2 Dew Point -40DEG F Flow Rate 45CFH
Single or Multiple Pass	SINGLE
Single or Multiple Arc	SINGLE
Welding Current	DC
Polarity	REVERSE
Welding Progression	STRINGER
Root Treatment	PER D1.5
Preheat and Interpass Temperature	PER D1.5
Postheat Temperature	NONE
Heat Input	Min _____ Max _____

WELDING PROCEDURE

Pass no.	Electrode size	Welding Current		Travel speed	Joint detail
		Amperes	Volts		
	.045	190	22	19	
Variable	LIMITS	171 TO 209	20 TO 24	17 TO 21	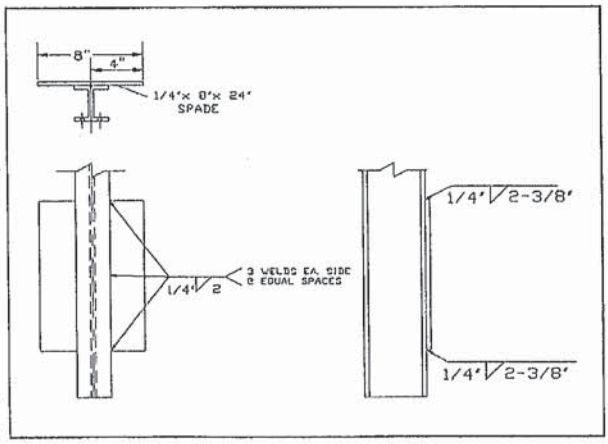

This procedure may vary due to fabrication sequence, fit-up, pass size, etc., within the limitation of variables given in Section 5.

Procedure No. 3022

Revision No. _____

Contractor Elderlee, Inc.

Authorized By RANDY SCOTT

Date 3/20/2014

Vermont Agency of Transportation

RECEIVED

ON: December 29, 2014

and Checked for

CONFORMANCE

BY: TAS DATE: 01/20/2015

WELDING PROCEDURE SPECIFICATION

PQR ELDERLEE #3

Material Specification	A572 TO A572
Welding Process	FCAW-G
Manual or Machine	SEMAUTOMATIC
Position of Welding	FLAT/HORIZONTAL
Filler Metal Specification	A5.29
Filler Metal Classification	E81T1-Ni1C-JH4
Flux	N/A
Shielding Gas	CO 2 Dew Point -40DEG F Flow Rate 50CFH
Single or Multiple Pass	SINGLE
Single or Multiple Arc	SINGLE
Welding Current	DC ELECTRODE POSITIVE
Polarity	REVERSE
Welding Progression	STRINGER
Root Treatment	PER D1.5
Preheat and Interpass Temperature	PER D1.5
Postheat Temperature	NONE
Heat Input	Min _____ Max _____

WELDING PROCEDURE

Pass no.	Electrode size	Welding Current Amperes	Welding Current Volts	Travel speed	Joint detail
1	1/16	310	25	11	
Variable	LIMITS	341 TO 269	27 TO 23	12 TO 10	

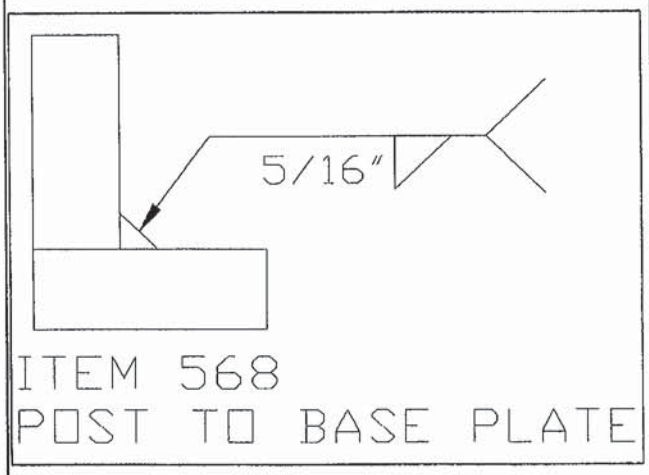

This procedure may vary due to fabrication sequence, fit-up, pass size, etc., within the limitation of variables given in Section 5.

Procedure No. 3002

Revision No. _____

Contractor Elderlee, Inc.

Authorized By RANDY SCOTT

Date 3/20/2014

Vermont Agency of Transportation
RECEIVED
ON: December 29, 2014
and Checked for
CONFORMANCE
BY: TAS DATE: 01/20/2015

WELDING PROCEDURE SPECIFICATION

Material Specification	A36 TO A500
Welding Process	FCAW
Manual or Machine	SEMAUTOMATIC
Position of Welding	FLAT / HORIZONTAL
Filler Metal Specification	A5.20 - 95
Filler Metal Classification	E81T1-Ni1C-JH4
Flux	N/A
Shielding Gas	CO 2 Dew Point -40DEG F Flow Rate 50CFH
Single or Multiple Pass	SINGLE
Single or Multiple Arc	SINGLE
Welding Current	DC
Polarity	REVERSE ELECTRODE POSITIVE
Welding Progression	STRINGER
Root Treatment	PER D1.5
Preheat and Interpass Temperature	PER D1.5
Postheat Temperature	NONE
Heat Input	Min Max

WELDING PROCEDURE

Pass no.	Electrode size	Welding Current Amperes	Welding Current Volts	Travel speed	Joint detail
1	1/16	300	26	14	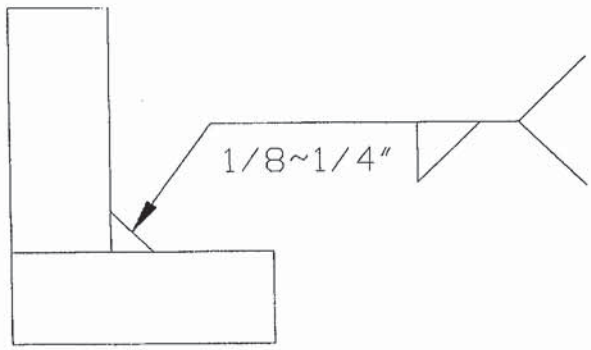
Variable	LIMITS	270 TO 330	24 TO 28	12.6 TO 15.4	

This procedure may vary due to fabrication sequence, fit-up, pass size, etc., within the limitation of variables given in Section 5.

Procedure No. 3006

Revision No.

Contractor Elderlee, Inc.

Authorized By RANDY SCOTT

Date 8/4/2014

Form III-2

Vermont Agency of Transportation
FRL-Rockingham - 2015-1-16 TYLI Reviewed AAN.pdf
RECEIVED
ON: December 29, 2014
and Checked for
CONFORMANCE
BY: TAS DATE: 01/20/2015

WELDING PROCEDURE SPECIFICATION

PQR ELDERLEE #3

Material Specification	ASTM-A500-A53-GRADE B TO A36
Welding Process	FCAW-G
Manual or Machine	SEMAUTOMATIC
Position of Welding	1G
Filler Metal Specification	A5.29
Filler Metal Classification	E81T1-Ni1C-JH4
Flux	N/A
Shielding Gas	CO 2 Dew Point -40DEG F FLOW RATE 50 CFH
Single or Multiple Pass	SINGLE
Single or Multiple Arc	SINGLE
Welding Current	DC
Polarity	REVERSE ELECTRODE POSITIVE
Welding Progression	STRINGER
Root Treatment	PER D1.5
Preheat and Interpass Temperature	PER. D1.5
Postheat Temperature	NONE
Heat Input	Min Max

WELDING PROCEDURE

Pass no.	Electrode size	Welding Current Amperes	Welding Current Volts	Travel speed	Joint detail
1	1/16	310	25	11	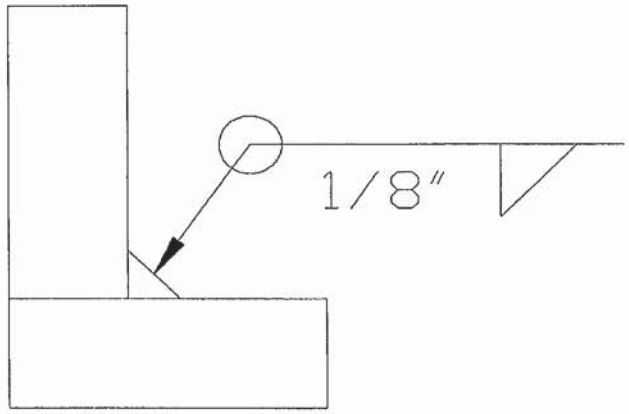
Variable	LIMITS	341 TO 269	27 TO 23	12 TO 10	

This procedure may vary due to fabrication sequence, fit-up, pass size, etc., within the limitation of variables given in Section 5.

Procedure No. 3012

Revision No.

Contractor Elderlee, Inc.

Authorized By RANDY SCOTT

Date 3/20/2014

Vermont Agency of Transportation
FBL-Rockingham - 2015-1-16 TYLI Reviewed AAN.pdf
RECEIVED
ON: December 29, 2014
and Checked for
CONFORMANCE
BY: TAS DATE: 01/20/2015

WELDING PROCEDURE SPECIFICATION

PQR ELDERLEE #3

Material Specification	A500 TO A572 GR 50
Welding Process	FCAW-G
Manual or Machine	SEMAUTOMATIC
Position of Welding	FLAT/HORIZONTAL
Filler Metal Specification	A5.29
Filler Metal Classification	E81T1-Ni1C-JH4
Flux	N/A
Shielding Gas	CO 2 Dew Point -40DEG F Flow Rate 50CFH
Single or Multiple Pass	SINGLE
Single or Multiple Arc	SINGLE
Welding Current	DC
Polarity	REVERSE
Welding Progression	STRINGER
Root Treatment	PER D1.5
Preheat and Interpass Temperature	PER D1.5
Postheat Temperature	NONE
Heat Input	Min _____ Max _____

WELDING PROCEDURE

Pass no.	Electrode size	Welding Current Amperes	Welding Current Volts	Travel speed	Joint detail
1	1/16	310	25	11	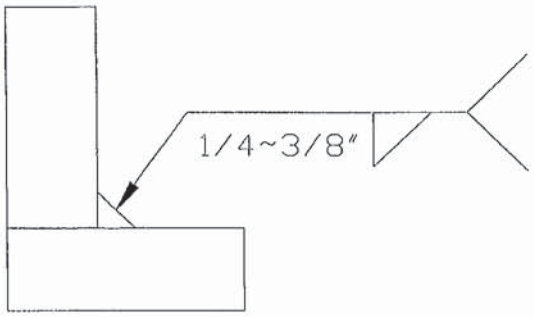
Variable	LIMITS	341 TO 269	27 TO 23	12 TO 10	

This procedure may vary due to fabrication sequence, fit-up, pass size, etc., within the limitation of variables given in Section 5.

Procedure No. 3016

Revision No. _____

Contractor Elderlee, Inc.

Authorized By RANDY SCOTT

Date 8/4/2014

Vermont Agency of Transportation

RECEIVED

ON: December 29, 2014

and Checked for

CONFORMANCE

BY: TAS DATE: 01/20/2015

WELDING PROCEDURE SPECIFICATION

PQR ELDERLEE #3

Material Specification	ASTM A572 GR. 50 TO A325
Welding Process	FCAW-G
Manual or Machine	SEMAUTOMATIC
Position of Welding	FLAT/HORIZONTAL
Filler Metal Specification	A5.29
Filler Metal Classification	E81T1-Ni1C-JH4
Flux	N/A
Shielding Gas	CO 2 Dew Point -40DEG F Flow Rate 50CFH
Single or Multiple Pass	SINGLE
Single or Multiple Arc	SINGLE
Welding Current	DC
Polarity	REVERSE ELECTRODE POSITIVE
Welding Progression	STRINGER
Root Treatment	CLEAN PER D1.5
Preheat and Interpass Temperature	PER D1.5
Postheat Temperature	NONE
Heat Input	Min _____ Max _____

WELDING PROCEDURE

Pass no.	Electrode size	Welding Current Amperes	Welding Current Volts	Travel speed	Joint detail
1	1/16	310	25	11	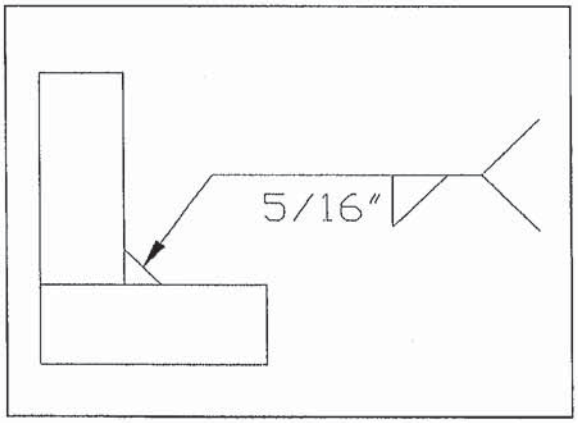
Variable	LIMITS	341 TO 269	27 TO 23	12 TO 10	

This procedure may vary due to fabrication sequence, fit-up, pass size, etc., within the limitation of variables given in Section 5.

Procedure No. 3019

Revision No. _____

Contractor Elderlee, Inc.

Authorized By RANDY SCOTT

Date 7/28/2014

Vermont Agency of Transportation
RECEIVED
ON: December 29, 2014
and Checked for
CONFORMANCE
BY: TAS DATE: 01/20/2015

WELDING PROCEDURE SPECIFICATION

PQR ELDERLEE #3

Material Specification	ASTM A572 GR. 50 CVN TO A500 GR B
Welding Process	FCAW-G
Manual or Machine	SEMAUTOMATIC
Position of Welding	FLAT/HORIZONTAL
Filler Metal Specification	A5.29
Filler Metal Classification	E81T1-Ni1C-JH4
Flux	N/A
Shielding Gas	CO 2 Dew Point -40DEG F Flow Rate 50CFH
Single or Multiple Pass	SINGLE
Single or Multiple Arc	SINGLE
Welding Current	DC
Polarity	REVERSE ELECTRODE POSITIVE
Welding Progression	STRINGER
Root Treatment	PER D1.5
Preheat and Interpass Temperature	PER D1.5
Postheat Temperature	NONE
Heat Input	Min Max

WELDING PROCEDURE

Pass no.	Electrode size	Welding Current Amperes	Welding Current Volts	Travel speed	Joint detail
1	1/16	310	25	11	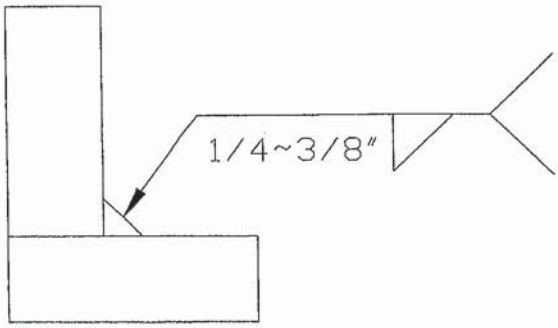
Variable	LIMITS	341 TO 269	27 TO 23	12 TO 10	

This procedure may vary due to fabrication sequence, fit-up, pass size, etc., within the limitation of variables given in Section 5.

Procedure No. 3037

Revision No.

Contractor Elderlee, Inc.

Authorized By RANDY SCOTT

Date 12/1/2014

Vermont Agency of Transportation
FRL-Rockingham - 2015-1-06 TYU Reviewed AAN.pdf
RECEIVED
ON: December 29, 2014
and Checked for
CONFORMANCE
BY: TAS DATE: 01/20/2015