Final Design Calculations for Structural Steel – VE Alternate

In the Town of

Rockingham, Vt.

BRF-0126(12)

Prepared for:

Cold River Bridges

By:

Calderwood Engineering etc

December, 2014

Revised based on internal design review 01/29/15

Cover photo of Cavendish
Courtesy of Cold River Bridges
BRF-0146(13)

Table of Contents – Superstructure Steel Design

Table of Contents i
Project notes: 1

Superstructure geometry, Girder and Deck Properties 2-3
Distribution Factors 4-7

Dead Load Computations 8
Live Loads & Uniform Dead Loads 9-16

Load Combinations Flexural Moment Strength I 17-19
Strength Capacity in Flexure Positive Moment 20-27
Stength Capacity in Flexure Negative Moment 28-30
Check Constructability of Exterior & Interior girders 31-34
Strength III & Strength V combined bending & wind loads & Capacity 35-36
Service II Load Case check for permanent deformation 37-38
Fatigue 39

Vertical Shear computations 40
Bearing stiffeners 41
Horizontal shear computations (shear studs) 42-47

Bolted Field Splice general overview & applicable notes 48
Loads at field splice 48-50
Top & Bottom Flange splice loads & design 51-57
Web Splice Loads & Design 58-62
Fatigue calculations at bolted field splice 63-64

CALDERWOOD ENGINEERING
222 RIVER ROAD
RICHMOND, ME 04357
PH. (207) 737-2007 FAX (207) 737-2008

Project: Rockingham VT Bridge
Contractor: Cold River Bridges

Value Engineering Design: Calderwood Engineering
Design Computations by: Eric T. Calderwood, PE
Design Check Computations by: Gregory MacAlister, EIT

Project Notes:

VTrans Structural Design Manual
4.3.2 Live Load Distribution: use controlling value of lever rule to det. amount of load on exterior beam. For interior and exterior beams, use controlling (larger) distribution factor calculated for one lane loaded, two lanes loaded or 3 or more loaded for flexure. Same for shear locations within span and at sprts. Controlling distribution factor will be larger of these.
For deflection, g shall be = max # lanes loaded / # beams * respective multipresence factor (m).
Calculate fatigue distribution factors similarly but with only one lane loaded.
5.1.1.1.1: Concrete, high performance class A for bridge decks placed on steel
5.1.2.6: Minimum Concrete Cover
5.2.1.1.1: Cast in Place Concrete Minimum deck thickness, paved deck, 8.5"
5.2.5: Minimum Reinforcement, #5 bars at 12" for reinforcing steel
6.3.2 Steel plate thicknesses
-Min: PL girder web -0.5"
PL girder flange - 7/8"
transverse connection plates - 0.5"
gusset plates - 0.5"
-Max:
Bent connection plates- 0.75"
6.3.6 Girder Flange Proportions
- Recommended minimum: 16"

Intermediate Diagraphrams for 24"-48" Bridge Beams:
- for 31"-36" depth plate girder web, use W27x84 Diaphram Member, number of bolts (N) = 7

$L_{pos} := (49\ ft + 3\ in) \cdot 2 + 33\ ft + 6\ in = 132\ ft$ total length of Positive Moment Girder section

$L_{neg} := 34\ ft \cdot 2 = 68\ ft$ total length of Negative Moment Girder section

Flange Transition locations:	49'-3"	
points of contraflexure:	83'-3"	
	116'-9"	(field splice)
	150'-9"	

CALDERWOOD ENGINEERING
222 RIVER ROAD
RICHMOND, ME 04357
PH. (207) 737-2007 FAX (207) 737-2008

Distribution Factors:

Table 4.6.2.2.1-2 L for use in LL Distribution Factor Equations
+M: length of span for which moment is being calculated
-M (near interior sprts of continuous spans): average length of two adjacent spans
V: length of span for which shear is calculated
Rext: length of exterior span
Rint: avg length of two adjacent spans

$K_1 := 1.0$

$\gamma_c := 150\ pcf$

$f'_c := 4\ ksi$

$$E_c := 33000 \cdot K_1 \cdot \left(\left(\frac{\gamma_c}{\frac{kip}{ft^3}} \right)^{1.5} \right) \cdot \sqrt{f'_c \cdot ksi} \qquad E_c = 3834.25\ ksi$$

Beam geometry/ Area/ y/ Iox/ Ioy Positive Moment Region

$b_{bf} := 16.0\ in$

$t_{bf} := 1.0625\ in \quad A_{bf} := b_{bf} \cdot t_{bf} = 0.12\ ft^2 \quad y_{bf} := \frac{t_{bf}}{2} \quad I_{oxbf} := \frac{b_{bf} \cdot t_{bf}^3}{12} \quad I_{oybf} := \frac{t_{bf} \cdot b_{bf}^3}{12}$

$d_w := 35\ in$

$t_w := 0.4375\ in \quad A_w := d_w \cdot t_w = 0.11\ ft^2 \quad y_w := t_{bf} + \frac{d_w}{2} \quad I_{oxw} := \frac{t_w \cdot d_w^3}{12} \quad I_{oyw} := \frac{d_w \cdot t_w^3}{12}$

$b_{tf} := 16.0\ in$

$t_{tf} := 1.0625\ in \quad A_{tf} := b_{tf} \cdot t_{tf} = 0.12\ ft^2 \quad y_{tf} := t_{bf} + d_w + \frac{t_{tf}}{2} \quad I_{oxtf} := \frac{b_{tf} \cdot t_{tf}^3}{12} \quad I_{oytf} := \frac{t_{tf} \cdot b_{tf}^3}{12}$

$d_{beam} := t_{tf} + d_w + t_{bf} = 37.13\ in$

$A_g := b_{tf} \cdot t_{tf} + b_{bf} \cdot t_{bf} + d_w \cdot t_w = 49.31\ in^2$

$$y_{bar} := \frac{\left(A_{bf} \cdot y_{bf} + A_w \cdot y_w + A_{tf} \cdot y_{tf}\right)}{A_g} = 18.56\ in$$

$$I_x := I_{oxbf} + A_{bf} \cdot \left(y_{bf} - y_{bar}\right)^2 + I_{oxw} + A_w \cdot \left(y_w - y_{bar}\right)^2 + I_{oxtf} + A_{tf} \cdot \left(y_{tf} - y_{bar}\right)^2$$

$I_x = 12620.63\ in^4$

$I_y := I_{oybf} + I_{oyw} + I_{oytf}$

$I_y = 725.58\ in^4 \qquad S_{tf} := \frac{I_x}{\left(d_{beam} - y_{bar}\right)} = 679.9\ in^3 \qquad S_{bf} := \frac{I_x}{y_{bar}} = 679.9\ in^3$

$$I_{tbf} := \frac{b_{bf}^3 \cdot t_{bf}}{12} + \frac{d_w}{6} \cdot \frac{t_w^3}{12} = 362.71\ in^4 \qquad A_{tbf} := b_{bf} \cdot t_{bf} + \frac{d_w}{6} \cdot t_w = 19.55\ in^2$$

$$I_{ttf} := \frac{b_{tf}^3 \cdot t_{tf}}{12} + \frac{d_w}{6} \cdot \frac{t_w^3}{12} = 362.71\ in^4 \qquad A_{ttf} := b_{tf} \cdot t_{tf} + \frac{d_w}{6} \cdot t_w = 19.55\ in^2$$

$$r_{tbf} := \sqrt{\frac{I_{tbf}}{A_{tbf}}} = 4.31\ in \qquad r_{ttf} := \sqrt{\frac{I_{ttf}}{A_{ttf}}} = 4.31\ in$$

CALDERWOOD ENGINEERING
222 RIVER ROAD
RICHMOND, ME 04357
PH. (207) 737-2007 FAX (207) 737-2008

Beam geometry/ Area/ y/ Iox/ Ioy Negative Moment Region (flange widths only change)

$b_{bfnm} := 18.375\ in$

$t_{bf} := 1.0625\ in \quad A_{bfnm} := b_{bfnm} \cdot t_{bf} = 0.14\ ft^2 \quad y_{bfnm} := \frac{t_{bf}}{2} \quad I_{oxbfnm} := \frac{b_{bfnm} \cdot t_{bf}^3}{12} \quad I_{oybfnm} := \frac{t_{bf} \cdot b_{bfnm}^3}{12}$

$b_{tfnm} := 18.375\ in$

$t_{tf} := 1.0625\ in \quad A_{tfnm} := b_{tfnm} \cdot t_{tf} = 0.14\ ft^2 \quad y_{tfnm} := t_{bf} + d_w + \frac{t_{tf}}{2} \quad I_{oxtfnm} := \frac{b_{tfnm} \cdot t_{tf}^3}{12} \quad I_{oytfnm} := \frac{t_{tf} \cdot b_{tfnm}^3}{12}$

$A_{gnm} := A_{bfnm} + A_w + A_{tfnm} = 54.36\ in^2$

$$y_{barnm} := \frac{\left(A_{bfnm} \cdot y_{bf} + A_w \cdot y_w + A_{tfnm} \cdot y_{tf}\right)}{A_{gnm}} = 18.56\ in$$

$$I_{xnm} := I_{oxbfnm} + A_{bfnm} \cdot \left(y_{bfnm} - y_{barnm}\right)^2 + I_{oxw} + A_w \cdot \left(y_w - y_{barnm}\right)^2 + I_{oxtfnm} + A_{tfnm} \cdot \left(y_{tfnm} - y_{barnm}\right)^2$$

$I_{xnm} = 14261.98\ in^4$

$I_{ynm} := I_{oybfnm} + I_{oyw} + I_{oytfnm}$

$I_{ynm} = 1098.9\ in^4 \quad S_{tfnm} := \frac{I_{xnm}}{\left(d_{beam} - y_{barnm}\right)} = 768.32\ in^3 \quad S_{bfnm} := \frac{I_{xnm}}{y_{barnm}} = 768.32\ in^3$

$I_{tbfnm} := \frac{b_{bfnm}^3 \cdot t_{bf}}{12} + \frac{d_w}{6} \cdot \frac{t_w^3}{12} = 549.37\ in^4 \quad A_{tbfnm} := b_{bfnm} \cdot t_{bf} + \frac{d_w}{6} \cdot t_w = 22.08\ in^2$

$I_{ttfnm} := \frac{b_{tfnm}^3 \cdot t_{tf}}{12} + \frac{d_w}{6} \cdot \frac{t_w^3}{12} = 549.37\ in^4 \quad A_{ttfnm} := b_{tfnm} \cdot t_{tf} + \frac{d_w}{6} \cdot t_w = 22.08\ in^2$

$r_{tbfnm} := \sqrt{\frac{I_{tbfnm}}{A_{tbfnm}}} = 4.99\ in \quad r_{ttfnm} := \sqrt{\frac{I_{ttfnm}}{A_{ttfnm}}} = 4.99\ in$

$t_{deck} := 9.0\ in \quad OH := 2\ ft + 7\ in = 2.58\ ft$

$skew := 30\ deg \quad OH_{ph} := 3\ ft + 10\ in = 3.83\ ft$ *Temporary overhang due to phase construction (at G2)*

CALDERWOOD ENGINEERING
222 RIVER ROAD
RICHMOND, ME 04357
PH. (207) 737-2007 FAX (207) 737-2008

Moment Interior Beam
(Table 4.6.2.2.2b-1)

where,
S - beam spacing(ft)
L - span length of beam (ft)
Kg - longitudinal stiffness parameter (in^4)
(4.6.2.2.1-1) n - ratio of modulus of elasticicy of beam and deck, A-
ts- depth of concrete slab (in), eg-distance between cg of basic beam and deck (assume deck cg h/2)

$S := 10\ ft + 6\ in = 10.5\ ft$

$L_{APRCH} := 65.5\ ft \quad L_{MAIN} := 69\ ft \qquad L_{negM} := \frac{(L_{APRCH} + L_{MAIN})}{2} = 67.25\ ft$

$E_B := 29000\ ksi$

$E_D := E_c$

$e_g := d_{beam} + \frac{t_{deck}}{2} = 3.47\ ft \qquad n := \frac{E_B}{E_D} \qquad t_s := t_{deck}$

$K_{gpos} := n \cdot (I_x + A_g \cdot e_g^{\ 2}) \qquad K_{gneg} := n \cdot (I_{xnm} + A_{gnm} \cdot e_g^{\ 2})$

$K_{gpos} = 741678.33\ in^4 \qquad K_{gneg} = 820230.05\ in^4$

Moment Interior, Approach span, one lane loaded

$$g1_{MI1L} := 0.06 + \left(\frac{S}{14 \cdot ft}\right)^{0.4} \cdot \left(\frac{S}{L_{APRCH}}\right)^{0.3} \cdot \left(\frac{K_{gpos}}{12.0 \cdot \frac{in}{ft} \cdot L_{APRCH} \cdot t_s^{\ 3}}\right)^{0.1}$$

$g1_{MI1L} = 0.59$

Moment Interior, Approach span,
two or more lanes loaded

$$g1_{MI2L} := 0.075 + \left(\frac{S}{9.5\ ft}\right)^{0.6} \cdot \left(\frac{S}{L_{APRCH}}\right)^{0.2} \cdot \left(\frac{K_{gpos}}{12.0\ \frac{in}{ft} \cdot L_{APRCH} \cdot t_s^{\ 3}}\right)^{0.1}$$

$g1_{MI2L} = 0.83$

Moment Interior, Neg. Moment,
one lane loaded

$$g2_{MI1L} := 0.06 + \left(\frac{S}{14 \cdot ft}\right)^{0.4} \cdot \left(\frac{S}{L_{negM}}\right)^{0.3} \cdot \left(\frac{K_{gneg}}{12.0\ \frac{in}{ft} \cdot L_{negM} \cdot t_s^{\ 3}}\right)^{0.1}$$

$g2_{MI1L} = 0.59$

Moment Interior, Neg. Mom,
two or more lanes loaded

$$g2_{MI2L} := 0.075 + \left(\frac{S}{9.5\ ft}\right)^{0.6} \cdot \left(\frac{S}{L_{negM}}\right)^{0.2} \cdot \left(\frac{K_{gneg}}{12.0\ \frac{in}{ft} \cdot L_{negM} \cdot t_s^{\ 3}}\right)^{0.1}$$

$g2_{MI2L} = 0.83$

CALDERWOOD ENGINEERING
222 RIVER ROAD
RICHMOND, ME 04357
PH. (207) 737-2007 FAX (207) 737-2008

Moment Interior, Main span,
one lane loaded

$$g3_{MI1L} := 0.06 + \left(\frac{S}{14 \cdot ft}\right)^{0.4} \cdot \left(\frac{S}{L_{MAIN}}\right)^{0.3} \cdot \left(\frac{K_{gpos}}{12.0 \frac{in}{ft} \cdot L_{MAIN} \cdot t_s^{\,3}}\right)^{0.1}$$

$$g3_{MI1L} = 0.58$$

Moment Interior, Main span, two or more lanes loaded

$$g3_{MI2L} := 0.075 + \left(\frac{S}{9.5\ ft}\right)^{0.6} \cdot \left(\frac{S}{L_{MAIN}}\right)^{0.2} \cdot \left(\frac{K_{gpos}}{12.0 \frac{in}{ft} \cdot L_{MAIN} \cdot t_s^{\,3}}\right)^{0.1}$$

$$g3_{MI2L} = 0.82$$

$$g_{MIcontrol} := \max\left(g3_{MI2L}, g3_{MI1L}, g2_{MI2L}, g2_{MI1L}, g1_{MI2L}, g1_{MI1L}\right) = 0.83$$

Moment Exterior
(Table 4.6.2.2.2d-1)

one lane loaded, Lever Rule

same for approach spans, main span and
negative moment regions

$$LE1_{MEL1} := \frac{0.5 \cdot (2 \cdot (S + OH - 2.83\ ft) - 6\ ft)}{S} = 0.69$$

Table 3.6.1.1.2-1, Multipresence
factor (m)

$m_{1L} := 1.20$ $\quad$ $m_{2L} := 1.00$

$$g1_{MEL1} := m_{1L} \cdot LE1_{MEL1} = 0.83$$

two or more lanes loaded:

$$d_e := 2\ ft + 7\ in - 10\ in = 1.75\ ft$$

$$e := 0.77 + \frac{d_e}{9.1\ ft}$$

$g1_{MEL2} := m_{2L} \cdot \left(e \cdot g1_{MI2L}\right) = 0.799$ positive moment approach span

$g2_{MEL2} := m_{2L} \cdot \left(e \cdot g2_{MI2L}\right) = 0.801$ negative moment region

$g3_{MEL2} := m_{2L} \cdot \left(e \cdot g3_{MI2L}\right) = 0.79$ positive moment main span

It should be noted that according to the VTrans Structures Manual 2010 the rigid cross-section or pile distribution factor is not required for the design of exterior beams

4.3.2 Live Load Distribution

The LRFD Specifications provides the equations and tables for live load distribution factors. See LRFD Section 4.6.2.2. For typical beam bridges, distribution factors are provided for interior beam flexure (single lane, multiple lanes, and fatigue), Interior beam shear (single lane, multiple lanes, and fatigue). Use controlling value of the lever rule and AASHTO distribution formulas to determine the amount of live load carried by the exterior beam. LRFD C4.6.2.2.2d provides a formula for computation of an additional distribution factor for bridges that have diaphragms or cross-frames. Use of the rigid cross-section or pile-equation distribution factor is not required for design of exterior beams.

For the interior and exterior beams, the designer shall use the controlling (or larger) distribution factor calculated for one lane loaded, two lanes loaded or three or more lanes loaded for flexure. Do the same for shear for locations within the span and at the supports. The controlling distribution factor will be the larger of these.

When checking deflection, the distribution factor shall be the maximum number of lanes loaded divided by the number of beams and multiplied by the respective multiple-presence factor.

The designer shall also calculate the fatigue distribution factors similarly as above except only consider one lane loaded.

$N_b := 4$

Skew Adjustment factor neglected for Moment (as skew adjustment reduces moment this is a conservative approach)

$g_{pm} := \max\left(g1_{MEL2}, g3_{MEL2}, g1_{MEL1}, g3_{MI2L}, g3_{MI1L}, g1_{MI2L}, g1_{MI1L}\right) = 0.83$ Positive moment distribution

$g_{nm} := \max\left(g2_{MEL2}, g1_{MEL1}, g2_{MI1L}, g2_{MI2L}\right) = 0.83$ Negative moment distribution

$g_{posfatm} := \dfrac{\max\left(g1_{MEL1}, g1_{MI1L}, g3_{MI1L}\right)}{m_{1L}} = 0.69$ Positive moment fatigue distribution

$g_{negfatm} := \dfrac{\max\left(g1_{MEL1}, g2_{MI1L}\right)}{m_{1L}} = 0.69$ Negative moment fatigue distribution

Shear Interior Beam
(Table 4.6.2.2.3a-1)

Shear Interior, one lane loaded

$$g1_{VIL1} := 0.36 + \frac{S}{25.0\ ft}$$

$$g1_{VIL1} = 0.78$$

Shear Interior, two or more lanes loaded

$$g1_{VIL2} := 0.2 + \frac{S}{12\ ft} - \left(\frac{S}{35\ ft}\right)^{2.0}$$

$$g1_{VIL2} = 0.99$$

Shear Exterior Beam
(Table 4.6.2.2.3b-1)

one lane loaded, Lever Rule

$$g1_{VEL1} := m_{1L} \cdot LE1_{MEL1} = 0.83$$

two or more lanes loaded

$$d_e := OH - 10\ in = 1.75\ ft$$

$$e := 0.60 + \frac{d_e}{10\ ft} = 0.78$$

$$g1_{VEL2} := m_{2L} \cdot (e \cdot g1_{VIL1}) = 0.6$$

Skew Correction factor for Shear:
LRFD 4.6.2.2.3c-skewed bridges

$$Cor_{skapr} := 1 + 0.20 \cdot \left(\frac{\left(12 \cdot \frac{in}{ft} \cdot L_{APRCH} \cdot t_{deck}^{\ 3}\right)}{K_{gpos}}\right)^{0.3} \cdot \tan(skew) = 1.107$$

$$Cor_{skneg} := 1 + 0.20 \cdot \left(\frac{\left(12 \cdot \frac{in}{ft} \cdot L_{negM} \cdot t_{deck}^{\ 3}\right)}{K_{gneg}}\right)^{0.3} \cdot \tan(skew) = 1.105$$

$$Cor_{skmain} := 1 + 0.20 \cdot \left(\frac{\left(12 \cdot \frac{in}{ft} \cdot L_{MAIN} \cdot t_{deck}^{\ 3}\right)}{K_{gpos}}\right)^{0.3} \cdot \tan(skew) = 1.109$$

$$Cor_{sk} := \max(Cor_{skapr}, Cor_{skmain}, Cor_{skneg}) = 1.11$$

Using highest calculated skew adjustment factor for shear

Controlling Shear Distibution Factor:

$$g_v := Cor_{sk} \cdot \max(g1_{VEL1}, g1_{VEL2}, g1_{VIL2}, g1_{VIL1}) = 1.09$$

$$g_{vfat} := Cor_{sk} \cdot \frac{\max(g1_{VEL1}, g1_{VIL1})}{m_{1L}} = 0.77$$

CALDERWOOD ENGINEERING
222 RIVER ROAD
RICHMOND, ME 04357
PH. (207) 737-2007 FAX (207) 737-2008

Dead Load Computations:

115% of steel weight to account for connection plates, diaphragms, weldments, & 1/16" add'l thickness on plates

$$W_{stl} := \frac{A_g \cdot 490\ pcf \cdot 115\% \cdot L_{pos} + A_{gnm} \cdot 490\ pcf \cdot 115\% \cdot L_{neg}}{L_{pos} + L_{neg}} = 199.68\ plf$$

$$W_{stl} = 0.2\ klf$$

$$W_{extdeck} := \left(\frac{S}{2} + OH\right) \cdot t_{deck} \cdot 150\ pcf = 881.25\ plf$$

$$W_{extdeck} = 0.88\ klf$$

$$W_{intdeck} := S \cdot t_{deck} \cdot 150\ pcf = 1181.25\ plf$$

$$W_{intdeck} = 1.18\ klf$$

$$W_{extpvt} := \left(\frac{S}{2} + OH - 10\ in\right) \cdot 3.25\ in \cdot 145\ pcf = 274.9\ plf$$

$$W_{extpvt} = 0.27\ klf$$

$$W_{intpvt} := S \cdot 3.25\ in \cdot 145\ pcf = 412.34\ plf$$

$$W_{intpvt} = 0.41\ klf$$

60% of railing load applied to exterior girders, steel railing taken at 25plf on top of concrete railing

$$W_{extrail} := 60\% \cdot 2 \cdot \frac{(10\ in \cdot (2\ ft + 3.25\ in) \cdot 150\ pcf + 25\ plf)}{2} = 185.31\ plf$$

$$W_{extrail} = 0.19\ klf$$

$$W_{intrail} := 40\% \cdot 2 \cdot \frac{(10\ in \cdot (2\ ft + 3.25\ in) \cdot 150\ pcf + 25\ plf)}{(N_b - 2)} = 123.54\ plf$$

$$W_{intrail} = 0.12\ klf$$

CALDERWOOD ENGINEERING
222 RIVER ROAD
RICHMOND, ME 04357
PH. (207) 737-2007 FAX (207) 737-2008

HS 20 load unfactored - undistributed without dynamic load allowance

3.6.1.2.2 truck definition

HS20 Truck

Distance	Vmax	Mmin	Mmax		No	Rmin	Rmax	
0.00	52.9	0.0	0.0		1	-5.6	52.9	
6.55	44.4	-37.0	290.7		2	-9.5	69.8	
13.10	36.2	-74.0	523.8		3	-9.4	69.8	
19.65	28.4	-111.0	653.2		4	-5.6	54.4	
26.20	21.3	-148.0	687.4					
32.75	27.8	-185.0	679.1					
39.30	35.6	-222.0	611.8					
45.85	42.7	-259.0	469.8					
52.40	49.2	-296.0	270.2					
58.95	55.1	-333.0	99.5					
65.50	60.1	-424.8	110.5					
72.40	49.7	-371.4	81.9					
79.30	41.8	-318.0	314.8					
86.20	33.7	-264.7	482.6					
93.10	25.6	-211.3	572.6					
100.00	22.2	-160.2	611.5					
106.90	30.3	-214.4	589.1					
113.80	38.4	-268.5	485.8					
120.70	46.1	-322.7	309.7					
127.60	52.8	-376.8	71.0					
134.50	61.3	-431.0	109.0					
141.05	55.4	-328.0	98.1					
147.60	48.7	-291.6	270.6					
154.15	41.4	-255.1	468.4					
160.70	33.5	-218.7	604.4					
167.25	25.1	-182.2	665.7		Vspmax=		41.7	kips
173.80	22.6	-145.8	698.2		Mspmin=		-291.7	k-ft
180.35	30.5	-109.3	652.5		Mspmax=		410.8	k-ft
186.90	38.9	-72.9	509.1		Mmax=		698.2	k-ft
193.45	46.5	-36.4	304.6		Mmin=		-431.0	k-ft
200.00	54.4	0.0	0.0		Vmax=		61.3	kips

$M_{maxhs20} = 698.16$ ft·kip

$M_{minhs20} = -430.97$ ft·kip

$R_{ahs20} = 52.94$ kip

$M_{spmaxhs20} = 410.84$ ft·kip

$V_{sphs20} = 41.69$ kip

$V_{maxhs20} = 61.3$ kip

$M_{2neghs20} = -376.82$ ft·kip

$R_{phs20} = 69.83$ kip

$M_{spminhs20} = -291.67$ ft·kip

CALDERWOOD ENGINEERING
222 RIVER ROAD
RICHMOND, ME 04357
PH. (207) 737-2007 FAX (207) 737-2008

Negative Moment Truck Train load
unfactored - undistributed
without dynamic load allowance
(90% of HS-20 truck train figured)

3.6.1.3 90% of two HS 20 trucks with 14' axle spacing and 50' from the rear axle of the front truck to the front axle of the rear truck.

Neg Moment Truck Train

Distance	Vmax	Mmin	Mmax		No	Rmin	Rmax	
0.00	47.6	0.0	0.0		1	-3.7	47.6	
6.55	39.9	-24.3	261.6		2	-8.6	70.1	
13.10	32.6	-48.6	471.4		3	-8.5	70.0	
19.65	25.6	-73.0	587.9		4	-3.7	49.6	
26.20	19.1	-97.3	618.6					
32.75	26.3	-121.6	611.2					
39.30	33.1	-145.9	550.7					
45.85	39.1	-170.3	422.8					
52.40	44.3	-251.0	243.2					
58.95	49.6	-414.9	89.7					
65.50	54.3	-634.1	99.7					
72.40	47.6	-427.3	97.2					
79.30	42.2	-286.2	261.8					
86.20	36.2	-238.2	371.9					
93.10	29.8	-190.2	429.3					
100.00	23.1	-144.5	457.3					
106.90	27.9	-193.3	450.2					
113.80	33.6	-242.1	392.3					
120.70	39.2	-290.9	280.7					
127.60	44.1	-429.0	110.8					
134.50	56.1	-636.9	98.1					
141.05	51.7	-417.7	88.3					
147.60	46.7	-253.3	249.4					
154.15	41.0	-167.7	426.6					
160.70	34.7	-143.8	547.2					
167.25	27.6	-119.8	607.2		Vsp=		38.8	kips
173.80	21.0	-95.8	640.6		Mminsp=		-263.0	k-ft
180.35	28.2	-71.9	596.1		Mmaxsp=		344.6	k-ft
186.90	35.6	-47.9	466.3		Mmax=		640.6	k-ft
193.45	42.5	-24.0	278.4		Mmin=		-636.9	k-ft
200.00	49.6	0.0	0.0		Vmax=		56.1	kips

$M_{maxnmtt} = 640.58$ ft·kip

$M_{minnmtt} = -636.91$ ft·kip

$R_{anmtt} = 47.65$ kip

$M_{spminnmtt} = -262.99$ ft·kip

$V_{spnmtt} = 38.76$ kip

$V_{maxnmtt} = 56.05$ kip

$M_{2negnmtt} = -429.02$ ft·kip

$R_{pnmtt} = 70.08$ kip

$M_{spmaxnmtt} = 344.62$ ft·kip

CALDERWOOD ENGINEERING
222 RIVER ROAD
RICHMOND, ME 04357
PH. (207) 737-2007 FAX (207) 737-2008

Design Tandem Load, Unfactored, Undistributed, with no dynamic load allowance

LRFD 3.6.1.2.3

Tandem

Distance	Vmax	Mmin	Mmax		No	Rmin	Rmax	
0.00	45.6	0.0	0.0		1	-4.3	45.6	
6.55	39.4	-28.1	258.0		2	-7.2	50.1	
13.10	33.3	-56.2	436.0		3	-7.2	50.0	
19.65	27.4	-84.3	553.9		4	-4.3	41.8	
26.20	21.8	-112.4	617.4					
32.75	22.6	-140.5	613.1					
39.30	28.2	-168.7	549.7					
45.85	33.5	-196.8	438.1					
52.40	38.3	-224.9	291.1					
58.95	42.5	-253.0	123.6					
65.50	47.4	-327.1	83.1					
72.40	43.0	-286.0	125.8					
79.30	38.0	-244.9	290.4					
86.20	32.5	-203.8	425.4					
93.10	26.7	-162.7	515.3					
100.00	20.9	-121.6	550.2					
106.90	23.3	-161.2	526.0					
113.80	29.1	-202.0	444.4					
120.70	34.8	-242.7	312.7					
127.60	40.2	-283.4	143.9					
134.50	48.1	-324.1	83.9					
141.05	44.9	-250.5	110.9					
147.60	40.9	-222.7	269.6					
154.15	36.5	-194.9	415.4					
160.70	31.5	-167.0	532.4					
167.25	26.1	-139.2	606.7		Vsp=		30.1	kips
173.80	20.4	-111.4	626.7		Mminsp=		-221.4	k-ft
180.35	23.9	-83.5	582.6		Mmaxsp=		388.09	k-ft
186.90	29.6	-55.7	466.8		Mmax=		626.7	k-ft
193.45	35.6	-27.8	273.8		Mmin=		-327.1	k-ft
200.00	41.8	0.0	0.0		Vmax=		48.1	kips

$M_{maxtan} = 626.66$ ft·kip

$M_{mintan} = -327.1$ ft·kip

$R_{atan} = 45.63$ kip

$M_{spmintan} = -221.37$ ft·kip

$V_{sptan} = 30.12$ kip

$V_{maxtan} = 48.12$ kip

$M_{2negtan} = -286$ ft·kip

$R_{ptan} = 50.06$ kip

$M_{spmaxtan} = 388.09$ ft·kip

CALDERWOOD ENGINEERING
222 RIVER ROAD
RICHMOND, ME 04357
PH. (207) 737-2007 FAX (207) 737-2008

Fatigue Truck *LRFD 3.6.1.4*
Unfactored, Undistributed, with
no dynamic load allowance

Fatigue Truck

Distance	Vmax	Mmin	Mmax		No	Rmin	Rmax	
0.00	45.9	0.0	0.0		1	-4.4	45.9	
6.55	37.9	-29.0	248.1		2	-7.5	65.0	
13.10	30.3	-57.9	397.5		3	-7.5	64.9	
19.65	23.4	-86.9	459.6		4	-4.5	45.3	
26.20	16.8	-115.9	476.8					
32.75	18.1	-144.8	484.3					
39.30	26.1	-173.8	470.9					
45.85	33.7	-202.8	373.8					
52.40	40.6	-231.7	208.0					
58.95	47.2	-260.7	78.2					
65.50	52.9	-368.0	86.8					
72.40	41.5	-297.2	44.3					
79.30	34.0	-254.5	200.3					
86.20	26.5	-211.8	335.2					
93.10	19.8	-169.1	396.1					
100.00	15.2	-126.4	456.4					
106.90	22.5	-168.4	456.9					
113.80	30.0	-210.9	383.9					
120.70	37.5	-253.5	239.0					
127.60	44.2	-296.0	44.5					
134.50	54.1	-369.8	87.2					
141.05	47.7	-263.1	78.5					
147.60	40.7	-233.9	194.7		Mspmax		321.98	k-ft
154.15	33.1	-204.6	337.8		Mspmin		-230.031	k-ft
160.70	26.1	-175.4	411.8		Mmax=		530.8	k-ft
167.25	18.7	-146.2	481.1		Msimmin=		-116.9	k-ft
173.80	16.3	-116.9	530.8		Mmaxrange		647.7	k-ft
180.35	23.3	-87.7	510.2		Mmin=		-369.8	k-ft
186.90	30.9	-58.5	404.6		Msimmax=		87.2	k-ft
193.45	37.9	-29.2	248.4		Mminrange=		-457.0	k-ft
200.00	45.3	0.0	0.0		Vmax=		54.1	kips

$M_{maxfat} = 530.77$ ft·kip

$M_{minfat} = -369.79$ ft·kip

$M_{maxrange} = 647.7$ ft·kip

$M_{spfatmax} = 321.98$ ft·kip

$V_{maxfat} = 54.11$ kip

$M_{2negfat} = -297.19$ ft·kip

$M_{minrange} = -456.98$ ft·kip

$M_{spfatmin} = -230.03$ ft·kip

CALDERWOOD ENGINEERING
222 RIVER ROAD
RICHMOND, ME 04357
PH. (207) 737-2007 FAX (207) 737-2008

Uniform load Maximixed for Positive Moment approach spans govern by inspection therefor spans 1 & 3 loaded, span 2 not loaded

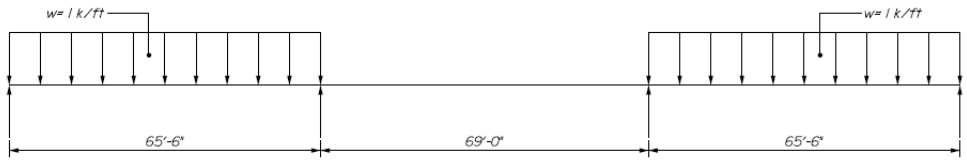

Uniform load positioned for maximum positive moment

Uniform load for Maximum Positive Moment (sp 1 & 3 Loaded)							
Distance	Vmax	Mmin	Mmax	No	Rmin	Rmax	
0.00	29.6	0.0	0.0	1	0.0	29.6	
6.55	23.0	0.0	172.3	2	0.0	35.9	
13.10	16.5	0.0	301.7	3	0.0	35.9	
19.65	9.9	0.0	388.1	4	0.0	29.6	
26.20	3.4	0.0	431.7				
32.75	3.2	0.0	432.4				
39.30	9.7	0.0	390.1				
45.85	16.3	0.0	305.0				
52.40	22.8	0.0	176.9				
58.95	29.4	0.0	6.0				
65.50	35.9	-207.8	0.0				
72.40	0.0	-207.8	0.0				
79.30	0.0	-207.8	0.0				
86.20	0.0	-207.8	0.0				
93.10	0.0	-207.8	0.0				
100.00	0.0	-207.8	0.0				
106.90	0.0	-207.8	0.0				
113.80	0.0	-207.8	0.0				
120.70	0.0	-207.8	0.0				
127.60	0.0	-207.8	0.0				
134.50	35.9	-207.8	0.0				
141.05	29.4	0.0	6.0				
147.60	22.8	0.0	176.9				
154.15	16.3	0.0	305.0				
160.70	9.7	0.0	390.1				
167.25	3.2	0.0	432.4				
173.80	3.4	0.0	431.7	Vsp13=		0.0	kips
180.35	9.9	0.0	388.1	Msp13=		-207.8	k-ft
186.90	16.5	0.0	301.7	Mmax=		432.4	k-ft
193.45	23.0	0.0	172.3	Mmin=		-207.8	k-ft
200.00	29.6	0.0	0.0	Vmax=		35.9	kips

$M_{13max} = 432.36$ ft·kip

$M_{13min} = -207.85$ ft·kip

$R_{a13} = 29.58$ kip

$M_{sp13} = -207.85$ ft·kip

$V_{13max} = 35.92$ kip

$M_{2neg13} := M_{13min} = -207.85$ ft·kip

$R_{p13} = 35.92$ kip

$V_{sp13} = 0$ kip

CALDERWOOD ENGINEERING
222 RIVER ROAD
RICHMOND, ME 04357
PH. (207) 737-2007 FAX (207) 737-2008

Uniform load Maximized for Negative Moment, spans 1 & 2 loaded, span 3 unloaded

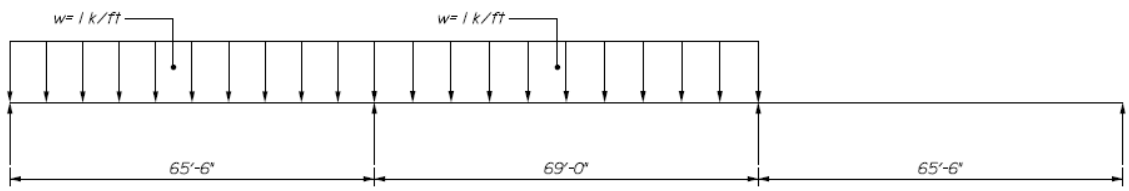

Uniform load positioned for maximum negative moment

Uniform load for Maximum Negative Moment (sp 1 & 2 Loaded)							
Distance	Vmax	Mmin	Mmax		No	Rmin	Rmax
0.00	24.8	0.0	0.0		1	0.0	24.8
6.55	18.2	0.0	140.8		2	0.0	80.3
13.10	11.7	0.0	238.7		3	0.0	32.0
19.65	5.1	0.0	293.7		4	-2.6	0.0
26.20	1.4	0.0	305.8				
32.75	8.0	0.0	275.0				
39.30	14.5	0.0	201.3				
45.85	21.1	0.0	84.7				
52.40	27.6	-74.8	0.0				
58.95	34.2	-277.2	0.0				
65.50	40.7	-522.5	0.0				
72.40	32.7	-273.2	0.0				
79.30	25.8	-71.4	0.0				
86.20	18.9	0.0	82.7				
93.10	12.0	0.0	189.3				
100.00	5.1	0.0	248.2				
106.90	1.8	0.0	259.5				
113.80	8.7	0.0	223.3				
120.70	15.6	0.0	139.4				
127.60	22.5	0.0	7.8				
134.50	2.6	-171.3	0.0				
141.05	2.6	-154.1	0.0				
147.60	2.6	-137.0	0.0				
154.15	2.6	-119.9	0.0				
160.70	2.6	-102.8	0.0				
167.25	2.6	-85.6	0.0		Vsp12=	21.8	kips
173.80	2.6	-68.5	0.0		Mspmin12	-30.5	k-ft
180.35	2.6	-51.4	0.0		Mspmax12=	187.4	k-ft
186.90	2.6	-34.3	0.0		Mmax=	305.8	k-ft
193.45	2.6	-17.1	0.0		Mmin=	-522.5	k-ft
200.00	2.6	0.0	0.0		Vmax=	40.7	kips

$M_{12max} = 305.82$ ft·kip

$M_{12min} = -522.54$ ft·kip

$R_{a12} = 24.77$ kip

$M_{spmax12} = 187.38$ ft·kip

$V_{12max} = 40.73$ kip

$M_{2neg12} = -277.22$ ft·kip

$R_{p12} = 80.32$ kip

$M_{spmin12} = -30.53$ ft·kip

$V_{sp12} = 21.84$ kip

CALDERWOOD ENGINEERING
222 RIVER ROAD
RICHMOND, ME 04357
PH. (207) 737-2007 FAX (207) 737-2008

Uniform load all spans loaded

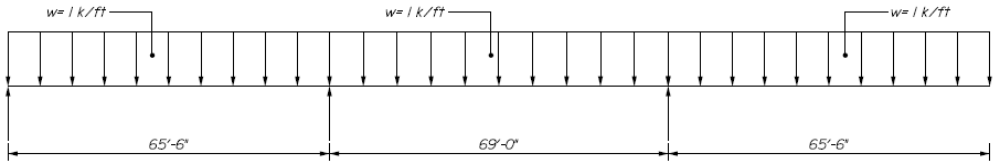

Uniform load positioned for maximum negative moment

Uniform load (spans 1,2 & 3 Loaded)								
Distance	Vmax	Mmin	Mmax		No	Rmin	Rmax	
0.00	25.9	0.0	0.0		1	0.0	25.9	
6.55	19.3	0.0	148.0		2	0.0	74.1	
13.10	12.8	0.0	253.1		3	0.0	74.1	
19.65	6.2	0.0	315.2		4	0.0	25.9	
26.20	0.3	0.0	334.5					
32.75	6.9	0.0	310.9					
39.30	13.4	0.0	244.3					
45.85	20.0	0.0	134.9					
52.40	26.5	-17.4	0.0					
58.95	33.1	-212.7	0.0					
65.50	39.6	-450.8	0.0					
72.40	27.6	-236.6	0.0					
79.30	20.7	-69.9	0.0					
86.20	13.8	0.0	49.1					
93.10	6.9	0.0	120.5					
100.00	0.0	0.0	144.3					
106.90	6.9	0.0	120.5					
113.80	13.8	0.0	49.1					
120.70	20.7	-69.9	0.0					
127.60	27.6	-236.6	0.0					
134.50	39.6	-450.8	0.0					
141.05	33.1	-212.7	0.0					
147.60	26.5	-17.4	0.0					
154.15	20.0	0.0	134.9					
160.70	13.4	0.0	244.3					
167.25	6.9	0.0	310.9					
173.80	0.3	0.0	334.5		Vsp123=		16.8	kips
180.35	6.2	0.0	315.2		Msp123=		-1.8	k-ft
186.90	12.8	0.0	253.1		Mmax=		334.5	k-ft
193.45	19.3	0.0	148.0		Mmin=		-450.8	k-ft
200.00	25.9	0.0	0.0		Vmax=		39.6	kips

$M_{123max} = 334.5$ ft·kip

$M_{123min} = -450.83$ ft·kip

$R_{a123} = 25.87$ kip

$M_{sp123} = -1.81$ ft·kip

$V_{123max} = 39.63$ kip

$M_{2neg123} = -236.58$ ft·kip

$R_{p123} = 74.13$ kip

$V_{sp123} = 16.75$ kip

CALDERWOOD ENGINEERING
222 RIVER ROAD
RICHMOND, ME 04357
PH. (207) 737-2007 FAX (207) 737-2008

Uniform load Span #1 only loaded (max fluid load positive moment)

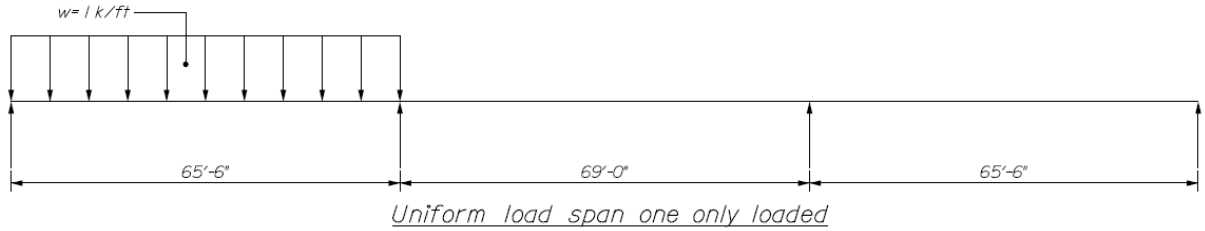

Uniform load (span 1 only Loaded)								
Distance	Vmax	Mmin	Mmax		No	Rmin	Rmax	
0.00	28.5	0.0	0.0		1	0.0	28.5	
6.55	21.9	0.0	165.1		2	0.0	42.1	
13.10	15.4	0.0	287.3		3	-6.2	0.0	
19.65	8.8	0.0	366.6		4	0.0	1.1	
26.20	2.3	0.0	403.0					
32.75	4.3	0.0	396.5					
39.30	10.8	0.0	347.1					
45.85	17.4	0.0	254.8					
52.40	23.9	0.0	119.6					
58.95	30.5	-58.5	0.0					
65.50	37.0	-279.6	0.0					
72.40	5.1	-244.4	0.0					
79.30	5.1	-209.3	0.0					
86.20	5.1	-174.2	0.0					
93.10	5.1	-139.1	0.0					
100.00	5.1	-103.9	0.0					
106.90	5.1	-68.8	0.0					
113.80	5.1	-33.7	0.0					
120.70	5.1	0.0	1.5					
127.60	5.1	0.0	36.6					
134.50	1.1	0.0	71.7					
141.05	1.1	0.0	64.5					
147.60	1.1	0.0	57.4					
154.15	1.1	0.0	50.2					
160.70	1.1	0.0	43.0					
167.25	1.1	0.0	35.9					
173.80	1.1	0.0	28.7		Vsp=		5.1	kips
180.35	1.1	0.0	21.5		Msp1=		-189.2	k-ft
186.90	1.1	0.0	14.3		Mmax=		403.0	k-ft
193.45	1.1	0.0	7.2		Mmin=		-279.6	k-ft
200.00	1.1	0.0	0.0		Vmax=		37.0	kips

$M_{1max} = 403.01$ ft·kip

$M_{1min} = -279.56$ ft·kip

$R_{a1} = 28.48$ kip

$M_{sp1} = -189.19$ ft·kip

$V_{1max} = 37.02$ kip

$M_{2neg1} = 0$ ft·kip

$R_{p1} = 42.11$ kip

$V_{sp1} = 5.09$ kip

CALDERWOOD ENGINEERING
222 RIVER ROAD
RICHMOND, ME 04357
PH. (207) 737-2007 FAX (207) 737-2008

Flexural Design: Calculation of Maximum Moments

Strenth I:

$\gamma_{ll} := 1.75$ $\quad IM := 33\%$ $\quad \gamma_{dc} := 1.25$ $\quad \gamma_{dw} := 1.5$

Positive Moments

$$M1_{LL\&I} := \gamma_{ll} \cdot g_{pm} \cdot \left((100\% + IM) \cdot \max\left(M_{maxhs20}, M_{maxtan}\right) + \left(\frac{0.64 \cdot klf}{1\ klf}\right) \cdot \max\left(M_{13max}, M_{123max}\right) \right)$$

$$M1_{LL\&I} = 1751.86\ ft{\cdot}kip$$

$$M1_{fluidext} := \gamma_{dc} \cdot \frac{W_{extdeck}}{1\ klf} \cdot M_{123max} = 368.47\ ft{\cdot}kip$$

$$M1_{fluidint} := \gamma_{dc} \cdot \frac{W_{intdeck}}{1\ klf} \cdot M_{123max} = 493.91\ ft{\cdot}kip$$

$$M1_{beam} := \gamma_{dc} \cdot \frac{W_{stl}}{1\ klf} \cdot M_{123max} = 83.49\ ft{\cdot}kip$$

$$M1_{railext} := \gamma_{dc} \cdot \frac{W_{extrail}}{1\ klf} \cdot M_{123max} = 77.48\ ft{\cdot}kip$$

$$M1_{railint} := \gamma_{dc} \cdot \frac{W_{intrail}}{1\ klf} \cdot M_{123max} = 51.66\ ft{\cdot}kip$$

$$M1_{pvtext} := \gamma_{dw} \cdot \frac{W_{extpvt}}{1\ klf} \cdot M_{123max} = 137.93\ ft{\cdot}kip$$

$$M1_{pvtint} := \gamma_{dw} \cdot \frac{W_{intpvt}}{1\ klf} \cdot M_{123max} = 206.89\ ft{\cdot}kip$$

$$M1_{str1ext} := M1_{LL\&I} + M1_{beam} + M1_{fluidext} + M1_{railext} + M1_{pvtext} = 2419.23\ ft{\cdot}kip$$

$$M1_{str1int} := M1_{LL\&I} + M1_{beam} + M1_{fluidint} + M1_{railint} + M1_{pvtint} = 2587.81\ ft{\cdot}kip$$

Negative Moments:

$$M2_{LL\&I} := \gamma_{ll} \cdot g_{nm} \cdot \left((100\% + IM) \cdot min\left(M_{minhs20}, M_{minnmtt}\right) + \frac{0.64 \cdot klf}{1\ klf} \cdot min\left(M_{123min}, M_{12min}\right) \right)$$

$$M2_{LL\&I} = -1720.7\ ft \cdot kip$$

$$M2_{fluidext} := \gamma_{dc} \cdot \frac{W_{extdeck}}{1\ klf} \cdot M_{123min} = -496.62\ ft \cdot kip$$

$$M2_{fluidint} := \gamma_{dc} \cdot \frac{W_{intdeck}}{1\ klf} \cdot M_{123min} = -665.68\ ft \cdot kip$$

$$M2_{beam} := \gamma_{dc} \cdot \frac{W_{stl}}{1\ klf} \cdot M_{123min} = -112.53\ ft \cdot kip$$

$$M2_{railext} := \gamma_{dc} \cdot \frac{W_{extrail}}{1\ klf} \cdot M_{123min} = -104.43\ ft \cdot kip$$

$$M2_{railint} := \gamma_{dc} \cdot \frac{W_{intrail}}{1\ klf} \cdot M_{123min} = -69.62\ ft \cdot kip$$

$$M2_{pvtext} := \gamma_{dw} \cdot \frac{W_{extpvt}}{1\ klf} \cdot M_{123min} = -185.9\ ft \cdot kip$$

$$M2_{pvtint} := \gamma_{dw} \cdot \frac{W_{intpvt}}{1\ klf} \cdot M_{123min} = -278.84\ ft \cdot kip$$

$$M2_{str1ext} := M2_{LL\&I} + M2_{beam} + M2_{fluidext} + M2_{railext} + M2_{pvtext} = -2620.17\ ft \cdot kip$$

$$M2_{str1int} := M2_{LL\&I} + M2_{beam} + M2_{fluidint} + M2_{railint} + M2_{pvtint} = -2847.37\ ft \cdot kip$$

Negative Moments @ 0.1xL from pier:

$$M3_{LL\&I} := \gamma_{ll} \cdot g_{nm} \cdot \left((100\% + IM) \cdot min\left(M_{2neghs20}, M_{2negnmtt}\right) + \frac{0.64 \cdot klf}{1\ klf} \cdot min\left(M_{2neg123}, M_{2neg12}\right) \right)$$

$$M3_{LL\&I} = -1089.38\ ft \cdot kip$$

$$M3_{fluidext} := \gamma_{dc} \cdot \frac{W_{extdeck}}{1\ klf} \cdot M_{2neg123} = -260.61\ ft \cdot kip$$

$$M3_{fluidint} := \gamma_{dc} \cdot \frac{W_{intdeck}}{1\ klf} \cdot M_{2neg123} = -349.33\ ft \cdot kip$$

$$M3_{beam} := \gamma_{dc} \cdot \frac{W_{stl}}{1\ klf} \cdot M_{2neg123} = -59.05\ ft \cdot kip$$

$$M3_{railext} := \gamma_{dc} \cdot \frac{W_{extrail}}{1\ klf} \cdot M_{2neg123} = -54.8\ ft \cdot kip$$

$$M3_{railint} := \gamma_{dc} \cdot \frac{W_{intrail}}{1\ klf} \cdot M_{2neg123} = -36.53\ ft \cdot kip$$

$$M3_{pvtext} := \gamma_{dw} \cdot \frac{W_{extpvt}}{1\ klf} \cdot M_{2neg123} = -97.55\ ft \cdot kip$$

$$M3_{pvtint} := \gamma_{dw} \cdot \frac{W_{intpvt}}{1\ klf} \cdot M_{2neg123} = -146.33\ ft \cdot kip$$

$$M3_{str1ext} := M3_{LL\&I} + M3_{beam} + M3_{fluidext} + M3_{railext} + M3_{pvtext} = -1561.4\ ft \cdot kip$$

$$M3_{str1int} := M3_{LL\&I} + M3_{beam} + M3_{fluidint} + M3_{railint} + M3_{pvtint} = -1680.63\ ft \cdot kip$$

Capacity of Positive Moment Regions - Strength Capacity

Exterior Girders - Composite properties:

$$A_{deckexLT} := \left(\frac{S}{2} + OH\right) \cdot t_{deck} \cdot \frac{E_D}{3 \cdot E_B} = 0.26\ ft^2$$

$$A_{deckexST} := \left(\frac{S}{2} + OH\right) \cdot t_{deck} \cdot \frac{E_D}{E_B} = 0.78\ ft^2$$

$$y_{exlt} := \frac{\left(A_{deckexLT} \cdot \left(\frac{t_{deck}}{2} + d_{beam}\right) + A_g \cdot y_{bar}\right)}{\left(A_g + A_{deckexLT}\right)} = 28.49\ in$$

$$y_{exst} := \frac{\left(A_{deckexST} \cdot \left(\frac{t_{deck}}{2} + d_{beam}\right) + A_g \cdot y_{bar}\right)}{\left(A_g + A_{deckexST}\right)} = 34.57\ in$$

$$d_{tot} := t_{deck} + t_{tf} + d_w + t_{bf} = 46.13\ in$$

$$I_{extLT} := t_{deck}^{\ 3} \cdot \left(\frac{S}{2} + OH\right) \cdot \frac{E_D}{3 \cdot E_B} + A_{deckexLT} \cdot \left(d_{tot} - \frac{t_{deck}}{2} - y_{exlt}\right)^2 + I_x + A_g \cdot \left(y_{exlt} - y_{bar}\right)^2$$

$$I_{extLT} = 26933.39\ in^4$$

$$S_{extfLT} := \frac{I_{extLT}}{\left(d_{beam} - y_{exlt}\right)} = 3119.87\ in^3 \qquad S_{exbfLT} := \frac{I_{extLT}}{y_{exlt}} = 945.29\ in^3$$

$$I_{extST} := t_{deck}^{\ 3} \cdot \left(\frac{S}{2} + OH\right) \cdot \frac{E_D}{E_B} + A_{deckexST} \cdot \left(d_{tot} - \frac{t_{deck}}{2} - y_{exst}\right)^2 + I_x + A_g \cdot \left(y_{exst} - y_{bar}\right)^2$$

$$I_{extST} = 39884.01\ in^4$$

$$S_{extfST} := \frac{I_{extST}}{\left(d_{beam} - y_{exst}\right)} = 15601.21\ in^3 \qquad S_{exbfST} := \frac{I_{extST}}{y_{exst}} = 1153.77\ in^3$$

CALDERWOOD ENGINEERING
222 RIVER ROAD
RICHMOND, ME 04357
PH. (207) 737-2007 FAX (207) 737-2008

Interior Girders - Composite properties:

$$A_{deckinLT} := S \cdot t_{deck} \cdot \frac{E_D}{3 \cdot E_B} = 0.35\ ft^2$$

$$A_{deckinST} := S \cdot t_{deck} \cdot \frac{E_D}{E_B} = 1.04\ ft^2$$

$$y_{inlt} := \frac{\left(A_{deckinLT} \cdot \left(\frac{t_{deck}}{2} + d_{beam}\right) + A_g \cdot y_{bar}\right)}{\left(A_g + A_{deckinLT}\right)} = 30.17\ in$$

$$y_{inst} := \frac{\left(A_{deckinST} \cdot \left(\frac{t_{deck}}{2} + d_{beam}\right) + A_g \cdot y_{bar}\right)}{\left(A_g + A_{deckinST}\right)} = 35.92\ in$$

$$d_{tot} = 46.13\ in$$

$$I_{intLT} := t_{deck}^{\ 3} \cdot S \cdot \frac{E_D}{3 \cdot E_B} + A_{deckinLT} \cdot \left(d_{tot} - \frac{t_{deck}}{2} - y_{inlt}\right)^2 + I_x + A_g \cdot \left(y_{inlt} - y_{bar}\right)^2$$

$$I_{intLT} = 29870.78\ in^4$$

$$S_{intfLT} := \frac{I_{intLT}}{\left(d_{beam} - y_{inlt}\right)} = 4295.47\ in^3 \qquad S_{inbfLT} := \frac{I_{intLT}}{y_{inlt}} = 990.05\ in^3$$

$$I_{intST} := t_{deck}^{\ 3} \cdot S \cdot \frac{E_D}{E_B} + A_{deckinST} \cdot \left(d_{tot} - \frac{t_{deck}}{2} - y_{inst}\right)^2 + I_x + A_g \cdot \left(y_{inst} - y_{bar}\right)^2$$

$$I_{intST} = 44502.03\ in^4$$

$$S_{intfST} := \frac{I_{intST}}{\left(d_{beam} - y_{inst}\right)} = 36842.66\ in^3 \qquad S_{inbfST} := \frac{I_{intST}}{y_{inst}} = 1239.02\ in^3$$

CALDERWOOD ENGINEERING
222 RIVER ROAD
RICHMOND, ME 04357
PH. (207) 737-2007 FAX (207) 737-2008

Calculation of yield moment at
Strength I condition Exterior Girder:

Appendix D6.2.2 Composite Sections in Positive Flexure

$F_y := 50$ ksi

$M_{D1ext} := M1_{fluidext} + M1_{beam} = 451.96$ ft·kip

$M_{D2ext} := M1_{pvtext} + M1_{railext} = 215.41$ ft·kip

$$M_{ADexttf} := S_{extfST} \cdot \left(F_y - \frac{M_{D1ext}}{S_{tf}} - \frac{M_{D2ext}}{S_{extfLT}}\right) = 53556.93 \text{ ft·kip}$$

$$M_{ADextbf} := S_{exbfST} \cdot \left(F_y - \frac{M_{D1ext}}{S_{bf}} - \frac{M_{D2ext}}{S_{exbfLT}}\right) = 3777.47 \text{ ft·kip}$$

$M_{ADext} := min\left(M_{ADexttf}, M_{ADextbf}\right) = 3777.47$ ft·kip

$M_{yext} := M_{ADext} + M_{D1ext} + M_{D2ext} = 4444.85$ ft·kip

Check Plastic Moment:

Appendix D6.1-1 Composite Sections in Positive Flexure

$$P_{Se} := 0.85 \cdot f'_c \cdot \left(\frac{S}{2} + OH\right) \cdot t_{deck} = 2876.4 \text{ kip}$$

$$P_C := F_y \cdot A_{tf} = 850 \text{ kip}$$

per Appendix Pc stands for Compression flange

$$P_W := F_y \cdot A_w = 765.63 \text{ kip}$$

$$P_T := F_y \cdot A_{bf} = 850 \text{ kip}$$

per Appendix Pt stands for Tension flange

$$\text{Case} := \begin{cases} 1 & \text{if } \langle P_T + P_W \rangle > \langle P_C + P_{Se} \rangle \\ 2 & \text{else if } \langle P_T + P_W + P_C \rangle > \langle P_{Se} \rangle \\ 3 & \text{else} \end{cases} = 3$$

The Plastic Neutral Axis is in the concrete deck this is not unexpected, the reinforcing steel is neglected as part of the section for the sake of simplicity and conservatism.

$$Y_{pexbar} := t_{deck} \cdot \frac{\langle P_C + P_W + P_T \rangle}{P_{Se}} = 7.71 \text{ in}$$

$$d_{tfe} := t_{deck} - Y_{pexbar} + \frac{t_{tf}}{2} = 1.82 \text{ in}$$

$$d_{we} := d_{tfe} + \frac{t_{tf}}{2} + \frac{d_w}{2} = 19.85 \text{ in}$$

$$d_{bfe} := d_{we} + \frac{d_w}{2} + \frac{t_{bf}}{2} = 37.88 \text{ in}$$

$$M_{pex} := Y_{pexbar}^{\ 2} \cdot \frac{P_{Se}}{2 \cdot t_{deck}} + \langle P_C \cdot d_{tfe} + P_W \cdot d_{we} + P_T \cdot d_{bfe} \rangle = 4870.67 \text{ ft·kip}$$

CALDERWOOD ENGINEERING
222 RIVER ROAD
RICHMOND, ME 04357
PH. (207) 737-2007 FAX (207) 737-2008

Nominal Flexural resistance per LRFD 6.10.7.1.2

$D_{pex} := Y_{pexbar} = 7.71$ in

$D_{tot} := t_{deck} + d_{beam} = 46.13$ in

$\frac{D_{pex}}{D_{tot}} = 0.17$

Dp/Dtot > 0.1 therefor full plastic moment cannot be reached

$M_{nex} := M_{pex} \cdot \left(1.07 - 0.7 \cdot \frac{D_{pex}}{D_{tot}}\right) = 4641.36$ ft·kip

$\varphi_f := 1.00$

Resistance Factor from LRFD 6.5.4.2

$M_{rex} := \varphi_f \cdot min\left(M_{nex}, 1.3 \cdot M_{yext}\right) = 4641.36$ ft·kip

Nominal moment capacity must be less than 1.3x the yield moment per 6.10.7.1.2-3

$M1_{str1ext} = 2419.23$ ft·kip

if $M_{rex} > M1_{str1ext}$
  "Exterior Girder Strength I flexure okay"
else
  "Exterior Girder Strength I flexure no good"

= "Exterior Girder Strength I flexure okay"

CALDERWOOD ENGINEERING
222 RIVER ROAD
RICHMOND, ME 04357
PH. (207) 737-2007 FAX (207) 737-2008

Calculation of yield moment at
Strength I condition Interior Girder:

Appendix D6.2.2 Composite Sections in Positive Flexure

$F_y := 50$ ksi

$M_{D1int} := M1_{fluidint} + M1_{beam} = 577.4$ ft·kip

$M_{D2int} := M1_{pvtint} + M1_{railint} = 258.55$ ft·kip

$$M_{ADinttf} := S_{intfST} \cdot \left(F_y - \frac{M_{D1int}}{S_{tf}} - \frac{M_{D2int}}{S_{intfLT}}\right) = 120005.09 \text{ ft·kip}$$

$$M_{ADintbf} := S_{inbfST} \cdot \left(F_y - \frac{M_{D1int}}{S_{bf}} - \frac{M_{D2int}}{S_{inbfLT}}\right) = 3786.79 \text{ ft·kip}$$

$M_{ADint} := min\left(M_{ADinttf}, M_{ADintbf}\right) = 3786.79$ ft·kip

$M_{yint} := M_{ADint} + M_{D1int} + M_{D2int} = 4622.74$ ft·kip

CALDERWOOD ENGINEERING
222 RIVER ROAD
RICHMOND, ME 04357
PH. (207) 737-2007 FAX (207) 737-2008

Check Plastic Moment:

Appendix D6.1-1 Composite Sections in Positive Flexure

$P_{Si} := 0.85 \cdot f'_c \cdot S \cdot t_{deck} = 3855.6$ kip

$P_C := F_y \cdot A_{tf} = 850$ kip

per Appendix Pc stands for Compression flange

$P_W := F_y \cdot A_w = 765.63$ kip

$P_T := F_y \cdot A_{bf} = 850$ kip

per Appendix Pt stands for Tension flange

$$Case := \begin{cases} 1 & \text{if } \langle P_T + P_W \rangle > \langle P_C + P_{Si} \rangle \\ 2 & \text{else if } \langle P_T + P_W + P_C \rangle > \langle P_{Si} \rangle \\ 3 & \text{else} \end{cases} = 3$$

The Plastic Neutral Axis is in the concrete deck this is not unexpected, the reinforcing steel is neglected as part of the section for the sake of simplicity and conservatism.

$$Y_{pinbar} := t_{deck} \cdot \frac{\langle P_C + P_W + P_T \rangle}{P_{Si}} = 5.76 \text{ in}$$

$$d_{tfi} := t_{deck} - Y_{pinbar} + \frac{t_{tf}}{2} = 3.78 \text{ in}$$

$$d_{wi} := d_{tfi} + \frac{t_{tf}}{2} + \frac{d_w}{2} = 21.81 \text{ in}$$

$$d_{bfi} := d_{wi} + \frac{d_w}{2} + \frac{t_{bf}}{2} = 39.84 \text{ in}$$

$$M_{pin} := Y_{pinbar}^{\ 2} \cdot \frac{P_{Si}}{2 \cdot t_{deck}} + \langle P_C \cdot d_{tfi} + P_W \cdot d_{wi} + P_T \cdot d_{bfi} \rangle = 5071.95 \text{ ft·kip}$$

CALDERWOOD ENGINEERING
222 RIVER ROAD
RICHMOND, ME 04357
PH. (207) 737-2007 FAX (207) 737-2008

Nominal Flexural resistance per LRFD 6.10.7.1.2

$D_{pin} := Y_{pinbar} = 5.76$ in

$D_{tot} := t_{deck} + d_{beam} = 46.13$ in

$\frac{D_{pin}}{D_{tot}} = 0.12$

Dp/Dtot > 0.1 therefor full plastic moment cannot be reached

$M_{nin} := M_{pin} \cdot \left(1.07 - 0.7 \cdot \frac{D_{pin}}{D_{tot}}\right) = 4983.98$ ft·kip

$\varphi_f := 1.00$

Resistance Factor from LRFD 6.5.4.2

$M_{rin} := \varphi_f \cdot min\left(M_{nin}, 1.3 \cdot M_{yint}\right) = 4983.98$ ft·kip

Nominal moment capacity must be less than 1.3x the yield moment per 6.10.7.1.2-3

$M1_{str1int} = 2587.81$ ft·kip

if $M_{rin} > M1_{str1int}$ = "Interior Girder Strength I flexure okay"
  "Interior Girder Strength I flexure okay"
else
  "Interior Girder Strength I flexure no good"

CALDERWOOD ENGINEERING
222 RIVER ROAD
RICHMOND, ME 04357
PH. (207) 737-2007 FAX (207) 737-2008

Check Negative Moment Capacity
of exterior girders:

Check Local Buckling per 6.10.8.2.2

$\lambda_f := \frac{b_{bfnm}}{2 \cdot t_{bf}} = 8.65$ *flange slenderness ratio*

$D_c := y_{bar} = 18.56$ in $\lambda_{rw} := 5.7 \cdot \sqrt{\left(\frac{E_B}{F_y}\right)} = 137.27$

$$R_b := \begin{cases} \text{if } \frac{2 \cdot D_c}{t_w} < \lambda_{rw} \\ \quad 1 \\ \text{else} \\ \quad \text{“load shedding factor must be calculated”} \end{cases} = 1$$

$R_h := 1$ *Section is not Hybrid, all plates are grade 50, therefor 6.10.1.10*

$F_{nclb} := R_b \cdot R_h \cdot F_y = 50$ ksi *Because the flange slenderness ratio is less than the compact flange slenderness ratio of 9.2 per C6.10.8.2.2-1*

Check Lateral torsional buckling resistance:
Cb taken as 1.0

$L_p := 1 \cdot r_{tbfnm} \cdot \sqrt{\frac{E_B}{F_y}} = 10.01$ ft

$L_r := \pi \cdot r_{tbfnm} \cdot \sqrt{\frac{E_B}{F_y}} = 31.45$ ft

$F_{yc} := F_y = 50$ ksi

$F_{yr} := 0.7 \cdot F_{yc} = 35$ ksi

CALDERWOOD ENGINEERING
222 RIVER ROAD
RICHMOND, ME 04357
PH. (207) 737-2007 FAX (207) 737-2008

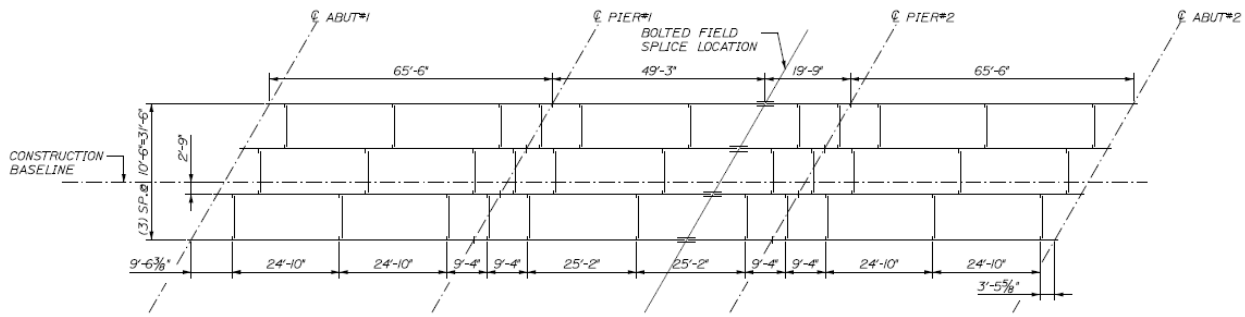

ROCKINGHAM FRAMING PLAN

$L_{bpier} := 9\ ft + 4\ in = 9.33\ ft$ *at pier locations*

$$F1_{ltb} := \begin{cases} R_b \cdot R_h \cdot F_{yc} & \text{if } L_{bpier} < L_p \\ \left(1 - \left(1 - \frac{F_{yr}}{R_h \cdot F_{yc}}\right) \cdot \left(\frac{L_{bpier} - L_p}{L_r - L_p}\right)\right) \cdot R_b \cdot R_h \cdot F_{yc} & \text{else if } L_{bpier} < L_r \\ \frac{\left(R_b \cdot \pi^2 \cdot E_B\right)}{\left(\frac{L_{bpier}}{r_{tbf}}\right)^2} & \text{else} \end{cases} = 50\ ksi$$

$F1_{nc} := min\left(F1_{ltb}, F_{nclb}\right)$ $\qquad F1_{nt} := R_h \cdot F_y = 50\ ksi$

$F1_{rc} := \varphi_f \cdot F1_{nc} = 50\ ksi$ $\qquad F1_{rt} := \varphi_f \cdot F1_{nt} = 50\ ksi$

$$f_{bextstr1} := \frac{M2_{str1ext}}{S_{bfnm}} = -40.92\ ksi$$

$$f_{bintstr1} := \frac{M2_{str1int}}{S_{bfnm}} = -44.47\ ksi$$

$$f_{textstr1} := \frac{M2_{str1ext}}{S_{tfnm}} = -40.92\ ksi$$

$$f_{tintstr1} := \frac{M2_{str1int}}{S_{tfnm}} = -44.47\ ksi$$

$L_{2bpier} := 25\ ft + 2\ in = 25.17\ ft$ *adjacent to next Cross frame at pier locations*

$$F2_{ltb} := \begin{cases} R_b \cdot R_h \cdot F_{yc} & \text{if } L_{2bpier} < L_p \\ \left(1 - \left(1 - \frac{F_{yr}}{R_h \cdot F_{yc}}\right) \cdot \left(\frac{L_{2bpier} - L_p}{L_r - L_p}\right)\right) \cdot R_b \cdot R_h \cdot F_{yc} & \text{else if } L_{2bpier} < L_r \\ \frac{\left(R_b \cdot \pi^2 \cdot E_B\right)}{\left(\frac{L_{2bpier}}{r_{tbf}}\right)^2} & \text{else} \end{cases} = 39.4\ ksi$$

$F2_{nc} := min\left(F2_{ltb}, F_{nclb}\right)$

$F2_{rc} := \varphi_f \cdot F2_{nc} = 39.4\ ksi$

$f_{bextstr1} := \frac{M3_{str1ext}}{S_{bfnm}} = -24.39\ ksi$

$f_{bintstr1} := \frac{M3_{str1int}}{S_{bfnm}} = -26.25\ ksi$

CALDERWOOD ENGINEERING
222 RIVER ROAD
RICHMOND, ME 04357
PH. (207) 737-2007 FAX (207) 737-2008

Check Constructability:

Positive Moment Region Governs by inspection as the negative moment region is designed non-composite, therefor by definition it is capable of carrying the fluid loads during deck construction. Overhang moment is carried between Cross frames by a couple resisted by lateral flange bending between cross frames

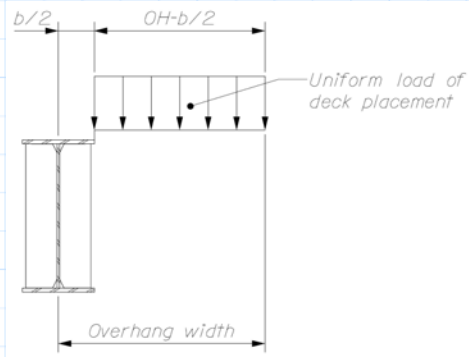

$L1_{max} := 25\ ft + 2\ in = 25.17\ ft$

$w_{concoh} := t_{deck} \cdot \gamma_c = 0.11\ ksf$

$w_{constll} := 50\ psf = 0.05\ ksf$

$\gamma_{llcon1} := 1.75$ *Construction live load during deck placement*

$w1_{oh} := \gamma_{dc} \cdot w_{concoh} + \gamma_{llcon1} \cdot w_{constll} = 0.23\ ksf$

$$M_{oh} := w1_{oh} \cdot \left(OH_{ph} - \frac{b_{tf}}{2}\right) \cdot \left(\frac{\left(OH_{ph} - \frac{b_{tf}}{2}\right)}{2} + \frac{b_{tf}}{2}\right) = 1.63\ \frac{ft \cdot kip}{ft}$$

$$D_{cpl} := d_w + \frac{t_{tf}}{2} + \frac{t_{bf}}{2} = 36.06\ in$$

$$\omega_{lat} := \frac{M_{oh}}{D_{cpl}} = 0.54\ \frac{kip}{ft}$$

$$M_{lat} := \frac{\omega_{lat} \cdot L1_{max}^2}{8} = 42.82\ ft \cdot kip$$

$$S_{ytf} := \frac{b_{tf}^2 \cdot t_{tf}}{6} = 45.33\ in^3 \qquad f_{ltf} := \frac{M_{lat}}{S_{ytf}} = 11.33\ ksi$$

$$S_{ybf} := \frac{b_{bf}^2 \cdot t_{bf}}{6} = 45.33\ in^3 \qquad f_{lbf} := \frac{M_{lat}}{S_{ybf}} = 11.33\ ksi$$

$$W_{phasedeck} := \left(\frac{S}{2} + OH_{ph}\right) \cdot t_{deck} \cdot \gamma_c = 1021.88\ plf$$

$$W_{constll} := \left(\frac{S}{2} + OH_{ph}\right) \cdot w_{constll} = 454.17\ plf$$

$$W1_{str1phase} := \gamma_{dc} \cdot W_{phasedeck} + \gamma_{llcon1} \cdot W_{constll} = 2.07\ klf$$

$$M1_{phase} := \frac{W1_{str1phase}}{1\ klf} \cdot M_{1max} = 835.09\ ft \cdot kip$$

$$f1_{butf} := \frac{f_{ltf}}{3} + \frac{M1_{phase}}{S_{tf}} = 18.52\ ksi$$

$$f1_{bubf} := \frac{f_{lbf}}{3} + \frac{M1_{phase}}{S_{bf}} = 18.52\ ksi$$

Check overhang during deck placement for Strength IV condition:

$w_{concoh} := t_{deck} \cdot \gamma_c = 0.11\ ksf$

$w_{constll} := 50\ psf = 0.05\ ksf$

$\gamma_{llcon4} := 1.5$

Construction live load during deck placement for strength IV use 1.5 as some live load will be present during the placement

$\gamma_{dc4} := 1.5$

$w4_{oh} := \gamma_{dc4} \cdot w_{concoh} + \gamma_{llcon4} \cdot w_{constll} = 0.24\ ksf$

$$M_{oh4} := w4_{oh} \cdot \left(OH_{ph} - \frac{b_{tf}}{2}\right) \cdot \left(\frac{\left(OH_{ph} - \frac{b_{tf}}{2}\right)}{2} + \frac{b_{tf}}{2}\right) = 1.74\ \frac{ft \cdot kip}{ft}$$

$$D_{cpl} := d_w + \frac{t_{tf}}{2} + \frac{t_{bf}}{2} = 36.06\ in$$

$$\omega_{4lat} := \frac{M_{oh4}}{D_{cpl}} = 0.58\ \frac{kip}{ft}$$

$$M_{4lat} := \frac{\omega_{4lat} \cdot L1_{max}^{2}}{8} = 45.75\ ft \cdot kip$$

$$f_{4ltf} := \frac{M_{4lat}}{S_{ytf}} = 12.11\ ksi \qquad f_{4lbf} := \frac{M_{4lat}}{S_{ybf}} = 12.11\ ksi$$

$$W4_{str4phase} := \gamma_{dc4} \cdot W_{phasedeck} + \gamma_{llcon4} \cdot W_{constll} = 2.21\ klf$$

$$M4_{phase} := \frac{W4_{str4phase}}{1\ klf} \cdot M_{1max} = 892.28\ ft \cdot kip$$

$$f4_{butf} := \frac{f_{ltf}}{3} + \frac{M4_{phase}}{S_{tf}} = 19.53\ ksi$$

$$f4_{bubf} := \frac{f_{lbf}}{3} + \frac{M4_{phase}}{S_{bf}} = 19.53\ ksi$$

CALDERWOOD ENGINEERING
222 RIVER ROAD
RICHMOND, ME 04357
PH. (207) 737-2007 FAX (207) 737-2008

For Interior Girders Constructability stresses
(Str I & Str IV cases):

$$M1_{str1int} := \frac{\gamma_{dc} \cdot S \cdot t_{deck} \cdot \gamma_c + \gamma_{llcon1} \cdot S \cdot w_{constll}}{1\ klf} \cdot M_{1max} = 965.33\ ft{\cdot}kip$$

$$M4_{str4int} := \frac{\left(\gamma_{dc4} \cdot S \cdot t_{deck} \cdot \gamma_c + \gamma_{llcon4} \cdot S \cdot w_{constll}\right)}{1\ klf} \cdot M_{1max} = 1031.45\ ft{\cdot}kip$$

$$f1_{tfint} := \frac{M1_{str1int}}{S_{tf}} = 17.04\ ksi \qquad f4_{tfint} := \frac{M4_{str4int}}{S_{tf}} = 18.2\ ksi$$

$$f1_{bfint} := \frac{M1_{str1int}}{S_{bf}} = 17.04\ ksi \qquad f4_{bfint} := \frac{M4_{str4int}}{S_{bf}} = 18.2\ ksi$$

$$f_{butf} := \max\left(f4_{butf}, f1_{butf}, f1_{tfint}, f4_{tfint}\right) = 19.53\ ksi$$

Controlling top flange stress during deck construction

$$f_{bubf} := \max\left(f4_{bubf}, f1_{bubf}, f1_{bfint}, f4_{bfint}\right) = 19.53\ ksi$$

Controlling bottom flange stress during deck construction

Check Constructability for Phase Const Overhang

Check Local Buckling per 6.10.8.2.2

$$\lambda_{tf} := \frac{b_{tf}}{2 \cdot t_{tf}} = 7.53$$

flange slenderness ratio bottom flange

$$D_c := y_{bar} = 18.56 \text{ in} \qquad \lambda_{rw} := 5.7 \cdot \sqrt{\left(\frac{E_B}{F_y}\right)} = 137.27$$

$$R_b = 1 \qquad R_h = 1$$

$$F_{nctflb} := R_b \cdot R_h \cdot F_y = 50 \text{ ksi}$$

Because the flange slenderness ratio is less than the compact flange slenderness ratio of 9.2 per C6.10.8.2.2-1

Check Lateral torsional buckling resistance:
Cb taken as 1.0

$$L_p := 1 \cdot r_{ttf} \cdot \sqrt{\frac{E_B}{F_y}} = 8.64 \text{ ft} \qquad F_{yc} := F_y = 50 \text{ ksi}$$

$$L_r := \pi \cdot r_{ttf} \cdot \sqrt{\frac{E_B}{F_y}} = 27.16 \text{ ft} \qquad F_{yr} := 0.7 \cdot F_{yc} = 35 \text{ ksi}$$

$$F_{ltbtf} := \begin{cases} R_b \cdot R_h \cdot F_{yc} & \text{if } L1_{max} < L_p \\ \left(1 - \left(1 - \frac{F_{yr}}{R_h \cdot F_{yc}}\right) \cdot \left(\frac{L1_{max} - L_p}{L_r - L_p}\right)\right) \cdot R_b \cdot R_h \cdot F_{yc} & \text{else if } L1_{max} < L_r \\ \frac{\left(R_b \cdot \pi^2 \cdot E_B\right)}{\left(\frac{L1_{max}}{r_{ttf}}\right)^2} & \text{else} \end{cases} = 36.61 \text{ ksi}$$

$$F_{nctf} := min\left(F_{ltbtf}, F_{nctflb}\right) = 36.61 \text{ ksi}$$

$$F_{rctf} := \varphi_f \cdot F_{nctf} = 36.61 \text{ ksi}$$

Resistance of Top flange is greater than Top flange stresses due to maximum overhang and deck placement sequence including 50psf live load due to formwork and construction equipment. Bottom flange is okay by inspection. Capacity will be equal or greater, stresses will be equal or lesser therefor no further investigation is necessary.

CALDERWOOD ENGINEERING
222 RIVER ROAD
RICHMOND, ME 04357
PH. (207) 737-2007 FAX (207) 737-2008

Check Strength III - Wind Loads

$P_{wind} := 0.050$ ksf *table 3.8.1.2.1-1*

$\gamma_{ll3} := 0.0$ $\gamma_{w3} := 1.40$ $\gamma_{dc} = 1.25$ $\gamma_{dw} = 1.5$

Consider the wind on the bottom 1/2 of the web and on the bottom flange to be carried by the bottom flange of the exterior girders between diaphragms in lateral flange bending. Wind on the top 1/2 of the web, railing, and top flange is carried by the deck acting as a diaphragm.

$$\omega_{windbtm} := P_{wind} \cdot \left(\frac{d_w}{2} + t_{bf}\right) = 77.34 \text{ plf}$$

$$M_{ulatbf} := \omega_{windbtm} \cdot \frac{L1_{max}^{2}}{8} = 6.12 \text{ ft·kip}$$

$$f_{l3} := \gamma_{w3} \cdot \frac{M_{ulatbf}}{S_{ybf}} = 2.27 \text{ ksi}$$

In cases of negative moment the bottom flange is in compression - in cases of positive moment the bottom flange is in tension

$$M4_{LL\&I} := \gamma_{ll3} \cdot g_{pm} \cdot \left\{(100\% + IM) \cdot \max\left(M_{maxhs20}, M_{maxtan}\right) + \frac{0.64 \text{ klf}}{1 \text{ klf}} \cdot \max\left(M_{13max}, M_{123max}\right)\right\}$$

$M4_{LL\&I} = 0$ ft·kip *Maximum positive & Negative moments for LL+I for Strength III are the same, zero*

$$f_{u3postf} := \frac{M4_{LL\&I}}{S_{extfST}} + \frac{\left(M1_{railext} + M1_{pvtext}\right)}{S_{extfLT}} + \frac{M1_{fluidext} + M1_{beam}}{S_{tf}} = 8.81 \text{ ksi}$$

$$f_{u3posbf} := \frac{M4_{LL\&I}}{S_{exbfST}} + \frac{\left(M1_{railext} + M1_{pvtext}\right)}{S_{exbfLT}} + \frac{M1_{fluidext} + M1_{beam}}{S_{bf}} + \frac{f_{l3}}{3} = 11.47 \text{ ksi}$$

$F_{rc} := 50$ ksi

$F_{rt} := \varphi_f \cdot R_h \cdot F_y = 50$ ksi

top & Bottom flanges okay in positive flexure for strength III per LRFD 6.10.8.2.1
Top flange is in compression, but in the finished construction for the strength limit state the Moment capacity is > the yield moment therefor setting the Resistance to the yield strength in the composite section is conservative.

$$M_{uneg3x} := M4_{LL\&I} + M2_{fluidext} + M2_{beam} + M2_{railext} + M2_{pvtext} = -899.47 \text{ ft·kip}$$

$$f_{ubf3neg} := \frac{M_{uneg3x}}{S_{bfnm}} + \frac{-f_{l3}}{3} = -14.8 \text{ ksi} \qquad f_{utf3neg} := \frac{M_{uneg3x}}{S_{tfnm}} = -14.05 \text{ ksi}$$

$F1_{rc} = 50$ ksi

$F2_{rc} = 39.4$ ksi

$F_{rt} = 50$ ksi

Top & Bottom flanges okay in negative flexure both at pier and adjacent to pier for strength III per LRFD 6.10.8.2.1 calculated resistance from negative moment calculations located previously

CALDERWOOD ENGINEERING
222 RIVER ROAD
RICHMOND, ME 04357
PH. (207) 737-2007 FAX (207) 737-2008

Check Strength V - condition:

$\gamma_{ll5} := 1.35 \qquad \gamma_{w5} := 0.40$

$$M5_{LL\&I} := \gamma_{ll5} \cdot g_{pm} \cdot \left((100\% + IM) \cdot \max\left(M_{maxhs20}, M_{maxtan}\right) + \frac{0.64\ klf}{1\ klf} \cdot \max\left(M_{13max}, M_{123max}\right) \right)$$

$M5_{LL\&I} = 1351.43\ ft{\cdot}kip$

$$M6_{LL\&I} := \gamma_{ll5} \cdot g_{nm} \cdot \left((100\% + IM) \cdot min\left(M_{minhs20}, M_{minnmtt}\right) + \frac{0.64 \cdot klf}{1\ klf} \cdot min\left(M_{123min}, M_{12min}\right) \right)$$

$M6_{LL\&I} = -1327.4\ ft{\cdot}kip$

$$f_{l5} := \gamma_{w5} \cdot \frac{M_{ulatbf}}{S_{ybf}} = 0.65\ ksi$$

$$f_{u5postf} := \frac{M5_{LL\&I}}{S_{extfST}} + \frac{\left(M1_{railext} + M1_{pvtext}\right)}{S_{extfLT}} + \frac{M1_{fluidext} + M1_{beam}}{S_{tf}} = 9.85\ ksi$$

$$f_{u5posbf} := \frac{M5_{LL\&I}}{S_{exbfST}} + \frac{\left(M1_{railext} + M1_{pvtext}\right)}{S_{exbfLT}} + \frac{M1_{fluidext} + M1_{beam}}{S_{bf}} + \frac{f_{l5}}{3} = 24.98\ ksi$$

$F_{rctf} = 36.61\ ksi$

$F_{rt} := \varphi_f \cdot R_h \cdot F_y = 50\ ksi$

top & Bottom flanges okay in positive flexure for strength V per LRFD 6.10.8.1.2

$$M_{uneg5x} := M6_{LL\&I} + M2_{fluidext} + M2_{beam} + M2_{railext} + M2_{pvtext} = -2226.87\ ft{\cdot}kip$$

$$f_{ubf5neg} := \frac{M_{uneg5x}}{S_{bfnm}} + \frac{-f_{l5}}{3} = -35\ ksi$$

$$f_{utf5neg} := \frac{M_{uneg5x}}{S_{tfnm}} = -34.78\ ksi$$

$F1_{rc} = 50\ ksi$

$F2_{rc} = 39.4\ ksi$

$F_{rt} = 50\ ksi$

Top & Bottom flange okay in Negative flexure both at pier and adjacent to pier for strength V per LRFD 6.10.8.1.1 calculated resistance from negative moment calculations located previously

Check Service II load case for
Exterior girders Positive moments

$\gamma_{llsvc2} := 1.3$

$MsvcII_{LLMax} := \gamma_{llsvc2} \cdot g_{pm} \cdot \left((100\% + IM) \cdot \max(M_{maxhs20}, M_{maxtan}) + \frac{0.64\ klf}{1\ klf} \cdot \max(M_{13max}, M_{123max}) \right)$

$MsvcII_{LLMax} = 1301.38\ ft{\cdot}kip$

$MP_{svcIIncdcx} := \frac{W_{extdeck} + W_{stl}}{1\ klf} \cdot M_{123max} = 361.57\ ft{\cdot}kip$

$MP_{svcIIsidcx} := \frac{W_{extrail}}{1\ klf} \cdot M_{123max} = 61.99\ ft{\cdot}kip$

$MP_{svcIIdwx} := \frac{W_{extpvt}}{1\ klf} \cdot M_{123max} = 91.95\ ft{\cdot}kip$

$f_{svcIIposbfx} := \frac{MP_{svcIIncdcx}}{S_{bf}} + \frac{MP_{svcIIsidcx} + MP_{svcIIdwx}}{S_{exbfLT}} + \frac{MsvcII_{LLMax}}{S_{exbfST}} = 21.87\ ksi$

$f_{svcIIpostfx} := \frac{MP_{svcIIncdcx}}{S_{tf}} + \frac{MP_{svcIIsidcx} + MP_{svcIIdwx}}{S_{extfLT}} + \frac{MsvcII_{LLMax}}{S_{extfST}} = 7.97\ ksi$

$MsvcII_{LLMin} := \gamma_{llsvc2} \cdot g_{nm} \cdot \left((100\% + IM) \cdot \min(M_{minhs20}, M_{mintan}) + \frac{0.64\ klf}{1\ klf} \cdot min(M_{12max}, M_{123max}) \right)$

$MsvcII_{LLMin} = -408.37\ ft{\cdot}kip$

$MN_{svcIItotx} := \frac{W_{extdeck} + W_{stl} + W_{extrail} + W_{extpvt}}{1\ klf} \cdot M_{123min} + MsvcII_{LLMin} = -1103.16\ ft{\cdot}kip$

$f_{svcIInegbfx} := \frac{MN_{svcIItotx}}{S_{bf}} = -19.47\ ksi$ $\qquad f_{svcIInegtfx} := \frac{-MN_{svcIItotx}}{S_{tf}} = 19.47\ ksi$

$F_{svcIIpos} := 0.95 \cdot F_y = 47.5\ ksi$

Per LRFD 6.4.2.2 for both top flanges and bottom flanges where deck is composite with steel

$F_{svcIIneg} := 0.80 \cdot F_y = 40\ ksi$

Per LRFD 6.4.2.2 for both top flanges and bottom flanges where deck is not composite with steel (negative moment region)

Check Service II load case for
Interior girders Positive moments

$\gamma_{llsvc2} := 1.3$

$MsvcII_{LLMax} := \gamma_{llsvc2} \cdot g_{pm} \cdot \left((100\% + IM) \cdot \max(M_{maxhs20}, M_{maxtan}) + \frac{0.64\ klf}{1\ klf} \cdot \max(M_{13max}, M_{123max}) \right)$

$MsvcII_{LLMax} = 1301.38\ ft{\cdot}kip$

$MP_{svcIIncdci} := \frac{W_{intdeck} + W_{stl}}{1\ klf} \cdot M_{123max} = 461.92\ ft{\cdot}kip$

$MP_{svcIIsidci} := \frac{W_{intrail}}{1\ klf} \cdot M_{123max} = 41.32\ ft{\cdot}kip$

$MP_{svcIIdwi} := \frac{W_{intpvt}}{1\ klf} \cdot M_{123max} = 137.93\ ft{\cdot}kip$

$f_{svcIIposbfi} := \frac{MP_{svcIIncdci}}{S_{bf}} + \frac{MP_{svcIIsidci} + MP_{svcIIdwi}}{S_{inbfLT}} + \frac{MsvcII_{LLMax}}{S_{inbfST}} = 22.93\ ksi$

$f_{svcIIpostfi} := \frac{MP_{svcIIncdci}}{S_{tf}} + \frac{MP_{svcIIsidci} + MP_{svcIIdwi}}{S_{extfLT}} + \frac{MsvcII_{LLMax}}{S_{intfST}} = 9.27\ ksi$

$MsvcII_{LLMin} := \gamma_{llsvc2} \cdot g_{nm} \cdot \left((100\% + IM) \cdot min(M_{minhs20}, M_{mintan}) + \frac{0.64\ klf}{1\ klf} \cdot min(M_{12max}, M_{123max}) \right)$

$MsvcII_{LLMin} = -408.37\ ft{\cdot}kip$

$MN_{svcIItoti} := \frac{W_{intdeck} + W_{stl} + W_{intrail} + W_{intpvt}}{1\ klf} \cdot M_{123min} + MsvcII_{LLMin} = -1272.53\ ft{\cdot}kip$

$f_{svcIInegbfi} := \frac{MN_{svcIItoti}}{S_{bf}} = -22.46\ ksi$

$f_{svcIInegtfi} := \frac{-MN_{svcIItoti}}{S_{tf}} = 22.46\ ksi$

$F_{svcIIpos} := 0.95 \cdot F_y = 47.5\ ksi$

Per LRFD 6.4.2.2 for both top flanges and bottom flanges where deck is composite with steel

$F_{svcIIneg} := 0.80 \cdot F_y = 40\ ksi$

Per LRFD 6.4.2.2 for both top flanges and bottom flanges where deck is not composite with steel (negative moment region)

Stresses in Exterior Girders are way below the limit therefor permanent deformations are not anticipated in the permanent structure

CALDERWOOD ENGINEERING
222 RIVER ROAD
RICHMOND, ME 04357
PH. (207) 737-2007 FAX (207) 737-2008

Check Fatigue Load Case:

Base Metal for Uncoated Weathering steel, and complete Joint Penetration fully NDT ground welded butt splices (as per flange splices) also for bolted connections with high strength bolts designed as slip critical connections with pretensioned bolts in holes that are drilled full sized or subpunched and reamed full size: Category B

Base metal at the toe of transverse stiffener to flange welds: Category C'

$IM_{fat} := 15\%$

$g_{posfatm} = 0.69$

$g_{negfatm} = 0.69$

$A_B := 120\ 10^8\ ksi^3 = 12000000000\ ksi^3$ $\quad \Delta_{thB} := 16\ ksi$ *Table 6.6.1.2.3-1 (AASHTO LRFD)*

$A_{C'} := 44 \cdot 10^8\ ksi^3 = 4400000000\ ksi^3$ $\quad \Delta_{thC'} := 12\ ksi$ *Table 6.6.1.2.3-1 (AASHTO LRFD)*

$M_{maxrange} = 647.7\ ft{\cdot}kip$ $\quad \gamma_{fatI} := 1.5$

$M_{minrange} = -456.98\ ft{\cdot}kip$ $\quad \Delta F_B := \Delta_{thB} = 16\ ksi$ $\quad \Delta F_{C'} := \Delta_{thC'} = 12\ ksi$

6.6.1.2.5 for Infinite Life check
Fatigue I, Base metal and welded flange splices are okay as the total factored fatigue range of stress is less than the threshold for infinite life.

$$f_{Binbfmax} := \gamma_{fatI} \cdot \frac{(100\% + IM_{fat})\ M_{maxrange}}{S_{inbfST}} \cdot g_{posfatm} = 7.48\ ksi$$

Interior btm Flange Max Positive moment

$$f_{Bintfmax} := \gamma_{fatI} \cdot \frac{(100\% + IM_{fat}) \cdot M_{maxrange}}{S_{exbfST}} \cdot g_{posfatm} = 8.03\ ksi$$

Exterior btm Flange Max Positive moment

$$f_{Btfmax} := \gamma_{fatI} \cdot \frac{(100\% + IM_{fat}) \cdot M_{minrange}}{S_{tfnm}} \cdot g_{negfatm} = -8.5\ ksi$$

Interior or Exterior top Flange Max Negative moment

Stresses at the toe of the fillet welds will be less than those at the extreme fiber of the girder as they are calculated here and therefor the stress range will be less than that calculated here, and the calculated stresses are less than the fatigue threshold for category C' details therefor there is no reason to continue to investigate fatigue at the connection plate welds it is okay by inspection.

Shear computations: (vertical shear)

Nominal resistance of Unstiffened webs per 6.10.9.2

$D := d_w = 35\ \text{in}$ $\qquad F_{yw} := F_y = 50\ \text{ksi}$

$V_p := 0.58 \cdot t_w \cdot D \cdot F_{yw} = 444.06\ \text{kip}$

$k := 5$ *for unstiffened panels per 6.10.9.2*

$$\frac{D}{t_w} = 80$$

$$1.12 \cdot \sqrt{\frac{E_B \cdot k}{F_{yw}}} = 60.31$$

$$1.40 \cdot \sqrt{\frac{E_B \cdot k}{F_{yw}}} = 75.39$$

Because D/tw > 75.39:

$$C := \frac{1.57}{\left(\frac{D}{t_w}\right)^2} \cdot \left(\frac{E_B \cdot k}{F_{yw}}\right) = 0.71$$

$V_n := C \cdot V_p = 315.91\ \text{kip}$

$\varphi_v := 1.0$ *Per 6.5.4.2 for Shear*

$V_r := \varphi_v \cdot V_n = 315.91\ \text{kip}$

$\gamma_{ll} = 1.75 \qquad \gamma_{dc} = 1.25 \qquad \gamma_{dw} = 1.5$

$$V_{ull} := g_v \cdot \gamma_{ll} \cdot \left((100\% + IM) \cdot \max\left(V_{maxhs20}, V_{maxnmtt}, V_{maxtan}\right) + \frac{0.64 \cdot \text{klf}}{1\ \text{klf}} \cdot V_{12max}\right) = 205.61\ \text{kip}$$

$$V_{uext} := V_{ull} + \frac{\gamma_{dc} \cdot \left(W_{stl} + W_{extdeck} + W_{extrail}\right) \cdot V_{123max}}{1\ \text{klf}} + \frac{\gamma_{dw} \cdot W_{extpvt} \cdot V_{123max}}{1\ \text{klf}} = 284.68\ \text{kip}$$

$$V_{uint} := V_{ull} + \frac{\gamma_{dc} \cdot \left(W_{stl} + W_{intdeck} + W_{intrail}\right) \cdot V_{123max}}{1\ \text{klf}} + \frac{\gamma_{dw} \cdot W_{intpvt} \cdot V_{123max}}{1\ \text{klf}} = 304.65\ \text{kip}$$

Shear Resistance is > factored shear therefor vertical shear is okay

CALDERWOOD ENGINEERING
222 RIVER ROAD
RICHMOND, ME 04357
PH. (207) 737-2007 FAX (207) 737-2008

Bearing Stiffeners: $IM = 33\%$

Use the same material as for the flanges of the girder for bearing stiffeners

$\gamma_{ll} = 1.75$ $\gamma_{dc} = 1.25$ $\gamma_{dw} = 1.5$

$$R_{upll} := g_v \cdot \gamma_{ll} \cdot \left((100\% + IM) \cdot \max\left(R_{phs20}, R_{pnmtt}, R_{ptan}\right) + \frac{0.64 \cdot klf}{1\ klf} \cdot R_{p12} \right) = 276.34\ kip$$

$$R_{uall} := g_v \cdot \gamma_{ll} \cdot \left((100\% + IM) \cdot \max\left(R_{ahs20}, R_{anmtt}, R_{atan}\right) + \frac{0.64 \cdot klf}{1\ klf} \cdot R_{a123} \right) = 166.19\ kip$$

$$R_{upex} := R_{upll} + \frac{\gamma_{dc} \cdot \left(W_{stl} + W_{extdeck} + W_{extrail}\right) + \gamma_{dw} \cdot W_{extpvt}}{1\ klf} \cdot R_{p12} = 436.59\ kip$$

$$R_{uaex} := R_{uall} + \frac{\gamma_{dc} \cdot \left(W_{stl} + W_{extdeck} + W_{extrail}\right) + \gamma_{dw} \cdot W_{extpvt}}{1\ klf} \cdot R_{a123} = 217.8\ kip$$

$$R_{upin} := R_{upll} + \frac{\gamma_{dc} \cdot \left(W_{stl} + W_{intdeck} + W_{intrail}\right) + \gamma_{dw} \cdot W_{intpvt}}{1\ klf} \cdot R_{p12} = 477.07\ kip$$

$$R_{uain} := R_{uall} + \frac{\gamma_{dc} \cdot \left(W_{stl} + W_{intdeck} + W_{intrail}\right) + \gamma_{dw} \cdot W_{intpvt}}{1\ klf} \cdot R_{a123} = 230.83\ kip$$

$t_{bsp} := t_{tf} = 1.06\ in$

$b_{tpmax} := 0.48 \cdot t_{bsp} \cdot \sqrt{\frac{E_B}{F_y}} = 12.28\ in$ $b_{tp} := 7\ in$

$A_{tp} := b_{tp} \cdot 2 \cdot t_{bsp} + 9 \cdot 2 \cdot t_w^{\ 2} = 18.32\ in^2$

$$I_{tp} := \frac{\left(b_{tp} \cdot 2 + t_w\right)^3 \cdot t_{bsp}}{12} + \frac{t_w^{\ 3} \cdot \left(2 \cdot 9 \cdot t_w - t_{bsp}\right)}{12} = 266.5\ in^4$$

$r_{tp} := \sqrt{\frac{I_{tp}}{A_{tp}}} = 3.81\ in$ $L_{effp} := 0.75 \cdot D = 26.25\ in$ *per 6.10.11.2.4 a & b*

$\varphi_c := 0.90$ *per 6.5.4.2*

$P_o := A_{tp} \cdot F_{yw} = 916.02\ kip$

$$P_e := \frac{\pi^2 \cdot E_B}{\left(\frac{L_{effp}}{r_{tp}}\right)^2} \cdot A_{tp} = 110698.13\ kip$$

$\frac{P_e}{P_o} = 120.85$ $P_n := 0.658^{\left(\frac{P_o}{P_e}\right)} \cdot P_o = 912.85\ kip$

$P_r := \varphi_c \cdot P_n = 821.56\ kip$ *7" wide bearing stiffeners is adequate for pier and abutment locations*

CALDERWOOD ENGINEERING
222 RIVER ROAD
RICHMOND, ME 04357
PH. (207) 737-2007 FAX (207) 737-2008

Check Horizontal Shear in Positive
Moment regions (shear flow)

Radial Fatigue Range due to skew:

$F_{rc} := 40\ kip$ Estimated lateral forces from diaphragm due to differential deflections being induced in adjacent beam line from skew effects

$w_{int} := 48\ in$ Effective Length of Deck except at end supports

$w_{end} := 24\ in$ Effective Length of Deck at end supports

$$F_{fat2int} := \frac{F_{rc}}{w_{int}} = 0.83\ \frac{kip}{in}$$

$$F_{fat2end} := \frac{F_{rc}}{w_{end}} = 1.67\ \frac{kip}{in}$$

$$Q_{ext} := A_{deckexST} \cdot \left(d_{tot} - \frac{t_{deck}}{2} - y_{exst}\right) = 789.3\ in^3$$

$$Q_{int} := A_{deckinST} \cdot \left(d_{tot} - \frac{t_{deck}}{2} - y_{inst}\right) = 855.8\ in^3$$

1st moment of transformed short term area of concrete deck about the neutral axis of the section

$$\frac{Q_{ext}}{I_{extST}} = \left(1.979 \cdot 10^{-2}\right)\ in^{-1}$$

$n := 3$ Studs per location

$$\frac{Q_{int}}{I_{intST}} = \left(1.9231 \cdot 10^{-2}\right)\ in^{-1}$$

Cycles per truck passage will be 1.0 per section 6.6.1.2.5-2 because the spans are >40.0 feet and we are only designing for "other than" at interior supports

$d_s := \frac{7}{8}\ in = 0.88\ in$ $D_{ir}D_{ist} := 55\%$

$ADTT_{14} := 280$ $ADTT_{89} := 1100$

ADTT at 75 years estimated at 1.85% annual increase over 75 years

$$ADTT_{sl} := \frac{ADTT_{14} + ADTT_{89}}{2} \cdot D_{ir}D_{ist} = 379.5$$

$N := 365 \cdot 75 \cdot 1 \cdot ADTT_{sl} = 10388812.5$ *AASHTO 6.6.1.2.5*

$\alpha_{fat} := (34.5 - 4.28 \cdot \log(N)) \cdot ksi = 4.47\ ksi$ *AASHTO 6.10.10.2-3*

$Z_r := \alpha_{fat} \cdot d_s^{\ 2} = 3.42\ kip$ *AASHTO 6.10.10.2-2*

$n \cdot Z_r = 10.26\ kip$

CALDERWOOD ENGINEERING
222 RIVER ROAD
RICHMOND, ME 04357
PH. (207) 737-2007 FAX (207) 737-2008

$I_{intST} = 44502.03\ in^4$ $\qquad F_{fat2int} = 0.83\ \frac{kip}{in}$

$IM_{fat} := 15\%$

$I_{extST} = 39884.01\ in^4$ $\qquad F_{fat2end} = 1.67\ \frac{kip}{in}$

Q_{int}=	855.8	in^3					I_{intST}	44502	in^4
Q_{ext}=	789.3	in^3					I_{extST}	39884	in^4
Q_{int}/I_{intST}=	0.0192	in^{-1}		IM	15%				
Q_{ext}/I_{extST}=	0.0198	in^{-1}	Fatigue Distribution Factor=					0.77	
Z,xn=	10.26	k/triple stud							
		Factored							
		Distributed	F_{fat}	V_{fatint}	V_{fatext}	V_{srint}	V_{srext}		
Location	Truck	w/ Im. Vf	k/in	k/in	k/in	k/in	k/in	p_{int}	p_{ext}
0.00	45.90	30.48	1.67	0.59	0.60	1.77	1.78	5.80	5.78
6.55	37.90	25.17	0.83	0.48	0.50	0.96	0.97	10.68	10.60
13.10	30.30	20.12	0.83	0.39	0.40	0.92	0.92	11.20	11.15
19.65	23.40	15.54	0.83	0.30	0.31	0.88	0.89	11.63	11.59
26.20	16.80	11.16	0.83	0.21	0.22	0.86	0.86	11.97	11.95
32.75	18.10	12.02	0.83	0.23	0.24	0.86	0.86	11.91	11.88
39.30	26.10	17.33	0.83	0.33	0.34	0.89	0.90	11.47	11.42
45.85	33.70	22.38	0.83	0.43	0.44	0.93	0.94	10.97	10.91
52.40	40.60	26.96	0.83	0.52	0.53	0.98	0.99	n/a	n/a
79.30	34.00	22.58	0.83	0.43	0.45	0.94	0.94	n/a	n/a
86.20	26.50	17.60	0.83	0.34	0.35	0.90	0.90	11.45	11.40
93.10	19.80	13.15	0.83	0.25	0.26	0.87	0.87	11.82	11.80
100.00	15.20	10.09	0.83	0.19	0.20	0.85	0.85	12.04	12.02
106.90	22.50	14.94	0.83	0.29	0.30	0.88	0.88	11.68	11.64
113.80	30.00	19.92	0.83	0.38	0.39	0.91	0.92	11.22	11.17
120.70	37.50	24.90	0.83	0.48	0.49	0.96	0.97	n/a	n/a
147.60	40.70	27.03	0.83	0.52	0.53	0.98	0.99	n/a	n/a
154.15	33.10	21.98	0.83	0.42	0.44	0.93	0.94	11.02	10.95
160.70	26.10	17.33	0.83	0.33	0.34	0.89	0.90	11.47	11.42
167.25	18.70	12.42	0.83	0.24	0.25	0.86	0.87	11.88	11.85
173.80	16.30	10.83	0.83	0.21	0.21	0.86	0.86	11.99	11.97
180.35	23.30	15.47	0.83	0.30	0.31	0.88	0.88	11.64	11.60
186.90	30.90	20.52	0.83	0.39	0.41	0.92	0.92	11.16	11.10
193.45	37.90	25.17	0.83	0.48	0.50	0.96	0.97	10.68	10.60
200.00	45.30	30.08	1.67	0.58	0.60	1.77	1.77	5.81	5.79
	pitch =	n/a	at negative moment regions over piers						
			stud spacing there will be double studs						
			at 24" spacing						

CALDERWOOD ENGINEERING
222 RIVER ROAD
RICHMOND, ME 04357
PH. (207) 737-2007 FAX (207) 737-2008

Nominal Shear Force (shear studs strength condition)

$P_{1pi} := 0.85 \cdot f'_c \cdot S \cdot t_{deck} = 3855.6\ kip$ *LRFD 6.10.10.4.2-2*

$P_{1pe} := 0.85 \cdot f'_c \cdot \left(\frac{S}{2} + OH\right) \cdot t_{deck} = 2876.4\ kip$ *LRFD 6.10.10.4.2-2*

$A_{sc} := \pi \cdot \left(\frac{d_s}{2}\right)^2 = 0.6\ in^2$

$P_{2p} := F_y \cdot A_g = 2465.63\ kip$ *LRFD 6.10.10.4.2-3*

$F_{uss} := 60\ ksi$ *LRFD 6.4.4*

$P_p := min\left(\max\left(P_{1pi}, P_{1pe}\right), P_{2p}\right) = 2465.63\ kip$

$F_p := \frac{F_{rc}}{w_{int}} \cdot 52\ ft = 520\ kip$ *Estimated due to skew effects*

$P := \sqrt{P_p^{\ 2} + F_p^{\ 2}} = 2519.86\ kip$ *LRFD 6.10.10.4.2-1*

$Q_{n1} := 0.5 \cdot A_{sc} \cdot \sqrt{f'_c \cdot E_c} = 37.23\ kip$ *LRFD 6.10.10.4.3-1*

$Q_{n2} := A_{sc} \cdot F_{uss} = 36.08\ kip$ *LRFD 6.10.10.4.3-1*

$Q_n := min\left(Q_{n1}, Q_{n2}\right) = 36.08\ kip$ *LRFD 6.10.10.4.3-1*

$\varphi_{sc} := 0.85$ *LRFD 6.5.4.2 for shear connectors*

$Q_r := \varphi_{sc} \cdot Q_n = 30.67\ kip$ *LRFD 6.10.10.4.1-1*

Number of Shear Connectors required between points of contraflexure & Maximum moment or between end reactions and points of maximum moment:

$\#SS_{rqd} := \frac{P}{Q_r} = 82.17$

$\frac{\#SS_{rqd}}{3} = 27.39$ *use a minimum of 28 sets of 3 studs between points of contraflexure and maximum moment*

Although steel is designed non composite for negative flexure - check stress in deck in order to determine required As in neg moment region, and then be able to check Shear stud requirements between points of contraflexure w/in negative moment regions for non-composite designs (per 6.10.10.3)

$I_{xnm} = 14261.98\ in^4$ $\quad A_{deckinST} = 149.93\ in^2$ $\quad y_{barnm} = 18.56\ in$

$A_{gnm} = 54.36\ in^2$ $\quad A_{deckexST} = 111.85\ in^2$ $\quad d_{tot} = 46.13\ in$

$$y_{barnegex} := \frac{A_{gnm} \cdot y_{barnm} + A_{deckexST} \cdot \left(d_{beam} + \frac{t_{deck}}{2}\right)}{A_{deckexST} + A_{gnm}} = 34.08\ in$$

$$y_{barnegin} := \frac{A_{gnm} \cdot y_{barnm} + A_{deckinST} \cdot \left(d_{beam} + \frac{t_{deck}}{2}\right)}{A_{deckinST} + A_{gnm}} = 35.49\ in$$

$$I_{compnmex} := t_{deck}^3 \cdot \left(\frac{S}{2} + OH\right) \cdot \frac{E_D}{E_B} + A_{deckexST} \cdot \left(d_{tot} - \frac{t_{deck}}{2} - y_{barnegex}\right)^2 + I_{xnm} + A_{gnm} \cdot \left(y_{barnegex} - y_{barnm}\right)^2$$

$I_{compnmex} = 42779.07\ in^4$

$$S_{decknmex} := \frac{\left(\frac{E_B}{E_D}\right) \cdot \left(I_{compnmex}\right)}{d_{tot} - y_{barnegex}} = 26867.85\ in^3$$

$$I_{compnmin} := t_{deck}^3 \cdot S \cdot \frac{E_D}{E_B} + A_{deckinST} \cdot \left(d_{tot} - \frac{t_{deck}}{2} - y_{barnegin}\right)^2 + I_{xnm} + A_{gnm} \cdot \left(y_{barnegin} - y_{barnm}\right)^2$$

$I_{compnmin} = 47625.86\ in^4$

$$S_{decknmin} := \frac{\left(\frac{E_B}{E_D}\right) \cdot \left(I_{compnmin}\right)}{d_{tot} - y_{barnegin}} = 33865.39\ in^3$$

$$MN_{svcIItotxdeck} := \frac{W_{extrail} + W_{extpvt}}{1\ klf} \cdot M_{123min} + MsvcII_{LLMin} = -615.84\ ft{\cdot}kip$$

$$MN_{svcIItotideck} := \frac{W_{intrail} + W_{intpvt}}{1\ klf} \cdot M_{123min} + MsvcII_{LLMin} = -649.96\ ft{\cdot}kip$$

$$f_{svc2deckex} := \frac{-MN_{svcIItotxdeck}}{S_{decknmex}} = 275.05\ psi$$

$$f_{svc2deckin} := \frac{-MN_{svcIItotideck}}{S_{decknmin}} = 230.31\ psi$$

Per section 6.10.1.7 if maximum tensile stress in concrete deck due to service II loading condition is >phi x fr then the area of reinforcing steel in the deck must be a minimum of 1% of the deck area in negative moment regions.

$\varphi := 0.90$ $\quad f_r := 0.24 \cdot \sqrt{f'_c \cdot ksi} = 0.48\ ksi$

$\varphi \cdot f_r = 432\ psi$

Stress in deck is not expected to exceed phi x the modulus of rupture therefor the 1% of deck area in reinforcing steel is not required in the negative moment region

CALDERWOOD ENGINEERING
222 RIVER ROAD
RICHMOND, ME 04357
PH. (207) 737-2007 FAX (207) 737-2008

Within negative moment region provide a minimum longitudinal steel area of #5 bars at 8" centers on the bottom mat, and #5 bars at 12" centers longitudinal steel at the top of the deck.

$$A_{rebar} := \frac{0.31\ in^2 \cdot 12 \cdot \frac{in}{ft}}{12\ in} + \frac{0.31\ in^2 \cdot 12 \cdot \frac{in}{ft}}{8\ in} = 0.775\ \frac{in^2}{ft} \qquad y_{barnm} = 18.56\ in$$

$$TopClr := 2.5\ in \qquad BtmClr := 1.5\ in$$

$$y_{rebar} := \left(d_{beam} + 1.5\ in + \frac{5}{16}\ in \cdot 1.5\right) \cdot \frac{0.465}{0.775} + \left(d_{beam} + 9\ in - 2.5\ in - \frac{5}{16}\ in \cdot 1.5\right) \cdot \frac{0.31}{0.775} = 40.72\ in$$

$$A_{rebarx} := A_{rebar} \cdot \left(\frac{S}{2} + OH\right) = 6.07\ in^2$$

$$y_{barx} := \frac{A_{rebarx} \cdot y_{rebar} + A_{gnm} \cdot y_{barnm}}{A_{rebarx} + A_{gnm}} = 20.79\ in$$

$$A_{rebari} := A_{rebar} \cdot (S) = 8.14\ in^2$$

$$y_{bari} := \frac{A_{rebari} \cdot y_{rebar} + A_{gnm} \cdot y_{barnm}}{A_{rebari} + A_{gnm}} = 21.45\ in$$

$$I_{nmex} := I_{xnm} + A_{rebarx} \cdot \left(y_{barx} - y_{rebar}\right)^2 + A_{gnm} \cdot \left(y_{barx} - y_{barnm}\right)^2 = 16942.76\ in^4$$

$$S_{nmex} := \frac{I_{nmex}}{\left(d_{beam} + t_{deck} - y_{barx}\right)} = 668.7\ in^3$$

$$I_{nmin} := I_{xnm} + A_{rebari} \cdot \left(y_{bari} - y_{rebar}\right)^2 + A_{gnm} \cdot \left(y_{bari} - y_{barnm}\right)^2 = 17736.54\ in^4$$

$$S_{nmin} := \frac{I_{nmin}}{\left(d_{beam} + t_{deck} - y_{bari}\right)} = 718.73\ in^3$$

$$f_{srx} := \gamma_{fatl} \cdot \frac{-1 \cdot \left(100\% + IM_{fat}\right) \cdot M_{minrange}}{S_{nmex}} \cdot g_{negfatm} = 9.77\ ksi$$

$$f_{sri} := \gamma_{fatl} \cdot \frac{-1 \cdot \left(100\% + IM_{fat}\right) \cdot M_{minrange}}{S_{nmin}} \cdot g_{negfatm} = 9.09\ ksi$$

$$n_{acx} := \frac{\left(A_{rebarx} \cdot f_{srx}\right)}{Z_r} = 17.34$$

Number of additional studs required between points of contraflexure over piers for exterior girders per 6.10.10.3 install in 2.61 ft. provide 7 sets of 3 at 6"

$$n_{aci} := \frac{\left(A_{rebari} \cdot f_{sri}\right)}{Z_r} = 21.62$$

Number of additional studs required between points of contraflexure over piers for interior girders per 6.10.10.3 install in 3.5 ft of the contraflexure. provide 8 sets of 3 at 6"

CALDERWOOD ENGINEERING
222 RIVER ROAD
RICHMOND, ME 04357
PH. (207) 737-2007 FAX (207) 737-2008

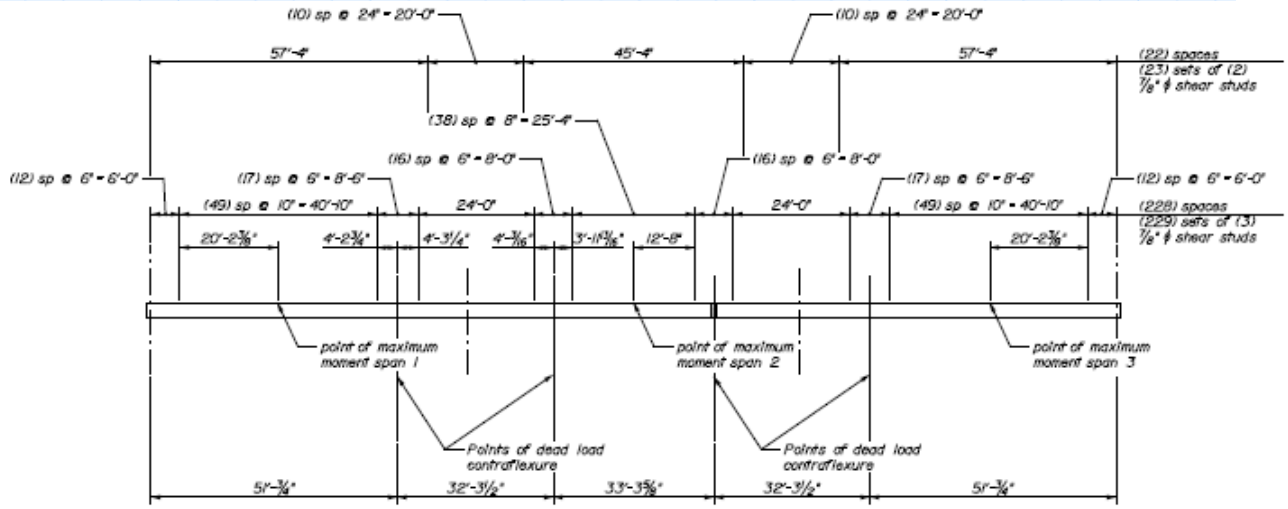

37 sets of (3) studs from ℄ brg to Max moment span 1 (>28 therefor okay)
33 sets of (3) studs from point of maximum moment span 1 to 1st point of contraflexure (>28 therefor okay)
28 sets of (3) studs from 2nd point of contraflexure to point of maximum moment at span 2 (=28 therefor okay)
sets of (3) studs spaced at 6" within 4'± of each point of contraflexure provides sufficient "additional connectors" for anchorage of reinforcing steel over negative moment region

SHEAR STUD LAYOUT

From Inches	to Inches	# Spaces	Stud Spcing	# studs/loc
0	72	12	6	3
72	312	24	10	3
312	562	25	10	3
562	664	17	6	3
664	952	12	24	2
952	1048	16	6	3
1048	1200	19	8	3
1200	1352	19	8	3
1352	1448	16	6	3
1448	1736	12	24	2
1736	1838	17	6	3
1838	2088	25	10	3
2088	2328	24	10	3
2328	2400	12	6	3

Bolted Field Splice:

6.4.4.4 Moment Capacity

6.4.4.4.1 Web Splice

The web design moment shall be the combination of the following:

- The total design moment multiplied by the net moment of inertia of the web divided by the net moment of inertia of the entire section;
- The moment due to eccentricity of the shear force introduced by the splice connection

In addition to this, the designer must also:

- Investigate bolt load with the bolt in double shear.
- Investigate loads in splice plates based on gross and net section of the plates using appropriate capacities.

6.4.4.4.2 Flange Splice

Design flange splices for that portion of the design moment not resisted by the web.

- Investigate bolt load with the bolt in double shear.
- Investigate applied loads in splice plates, based on net section of the plate using appropriate capacities.
- Consider filler plates for bolt shear checks.

6.4.4.5 Shear Capacity

6.4.4.5.1 Plate Girder

Base the design shear force on the combination of the following:

- The average of the shear force capacity of the web plates on either side of the splice
- Actual shear force at the splice

The result should be greater than or equal to 75% of the shear force capacity of the section.

Check Live Load Maximum and
Minimum at splice locations:
(unfactored undistributed)

$$M_{spllpostruck} := (100\% + IM) \cdot \max\left(M_{spmaxtan}, M_{spmaxnmtt}, M_{spmaxhs20}\right) = 546.42\ \text{ft}\cdot\text{kip}$$

$$M_{spllposlane} := \frac{0.640\ \text{klf}}{1\ \text{klf}} \cdot \max\left(M_{sp1}, M_{spmax12}, M_{sp13}, M_{sp123}\right) = 119.93\ \text{ft}\cdot\text{kip}$$

$$M_{spllnegtruck} := (100\% + IM) \cdot \min\left(M_{spmintan}, M_{spminnmtt}, M_{spminhs20}\right) = -387.92\ \text{ft}\cdot\text{kip}$$

$$M_{spllneglane} := \frac{0.640\ \text{klf}}{1\ \text{klf}} \cdot min\left(M_{sp1}, M_{spmin12}, M_{sp13}, M_{sp123}\right) = -133.02\ \text{ft}\cdot\text{kip}$$

$$M_{spdcext} := \frac{W_{stl} + W_{extdeck} + W_{extrail}}{1\ klf} \cdot M_{sp123} = -2.29\ ft{\cdot}kip$$

$$M_{spdwext} := \frac{W_{extpvt}}{1\ klf} \cdot M_{sp123} = -0.5\ ft{\cdot}kip$$

$$M_{spdcint} := \frac{W_{stl} + W_{intdeck} + W_{intrail}}{1\ klf} \cdot M_{sp123} = -2.72\ ft{\cdot}kip$$

$$M_{spdwint} := \frac{W_{intpvt}}{1\ klf} \cdot M_{sp123} = -0.75\ ft{\cdot}kip$$

Service Moment & Shear at Svc II
at the splice locations:

$$\gamma_{llsvc2} := 1.3 \qquad \gamma_{dcsvc2} := 1 \qquad \gamma_{dwsvc2} := 1$$

$$M_{spllpos} := g_{pm} \cdot \langle M_{spllpostruck} + M_{spllposlane} \rangle = 553.45\ ft{\cdot}kip$$

$$M_{spllneg} := g_{nm} \cdot \langle M_{spllnegtruck} + M_{spllneglane} \rangle = -433.53\ ft{\cdot}kip$$

$$M_{spsvcIIpos} := \gamma_{llsvc2} \cdot M_{spllpos} + \gamma_{dcsvc2} \cdot \max\left(\left(M_{spdcext} + \frac{\gamma_{dwsvc2}}{\gamma_{dcsvc2}} \cdot M_{spdwext}\right), \left(M_{spdcint} + \frac{\gamma_{dwsvc2}}{\gamma_{dcsvc2}} \cdot M_{spdwint}\right)\right)$$

$$M_{spsvcIIpos} = 716.69\ ft{\cdot}kip$$

$$M_{spsvcIIneg} := \gamma_{llsvc2} \cdot M_{spllneg} + \gamma_{dcsvc2} \cdot min\left(\left(M_{spdcext} + \frac{\gamma_{dwsvc2}}{\gamma_{dcsvc2}} \cdot M_{spdwext}\right), \left(M_{spdcint} + \frac{\gamma_{dwsvc2}}{\gamma_{dcsvc2}} \cdot M_{spdwint}\right)\right)$$

$$M_{spsvcIIneg} = -567.06\ ft{\cdot}kip$$

$$M_{svc2sp} := \max\left(\left|M_{spsvcIIpos}\right|, \left|M_{spsvcIIneg}\right|\right) = 716.69\ ft{\cdot}kip$$

$$V_{spllsvc2} := \gamma_{llsvc2} \cdot g_v \cdot \left((100\% + IM) \cdot \max\left(V_{sptan}, V_{spnmtt}, V_{sphs20}\right) + \frac{0.64 \cdot klf}{1\ klf} \cdot \max\left(V_{sp1}, V_{sp12}, V_{sp13}, V_{sp123}\right)\right)$$

$$V_{spllsvc2} = 98.55\ kip$$

$$V_{spdcint} := \frac{\langle W_{stl} + W_{intdeck} + W_{intrail} \rangle}{1\ klf} \cdot V_{sp123} \qquad V_{spdwint} := \frac{W_{intpvt}}{1\ klf} \cdot V_{sp123}$$

$$V_{spdcext} := \frac{\langle W_{stl} + W_{extdeck} + W_{extrail} \rangle}{1\ klf} \cdot V_{sp123} \qquad V_{spdwext} := \frac{W_{extpvt}}{1\ klf} \cdot V_{sp123}$$

$$V_S := V_{spllsvc2} + \max\left(\left\langle \gamma_{dcsvc2} \cdot V_{spdcint} + \gamma_{dwsvc2} \cdot V_{spdwint} \right\rangle, \left\langle \gamma_{dcsvc2} \cdot V_{spdcext} + \gamma_{dwsvc2} \cdot V_{spdwext} \right\rangle\right) = 130.66\ kip$$

CALDERWOOD ENGINEERING
222 RIVER ROAD
RICHMOND, ME 04357
PH. (207) 737-2007 FAX (207) 737-2008

Strength I moments & Shear
at the splice location:

$\gamma_{ll} = 1.75$ $\gamma_{dc} = 1.25$ $\gamma_{dw} = 1.5$ $\gamma_{dcmin} := 0.90$ $\gamma_{dwmin} := 0.65$

$$M_{spstr1pos} := \gamma_{ll} \cdot M_{spllpos} + \gamma_{dcmin} \cdot \max\left(\left(M_{spdcext} + \frac{\gamma_{dwmin}}{\gamma_{dcmin}} \cdot M_{spdwext}\right), \left(M_{spdcint} + \frac{\gamma_{dwmin}}{\gamma_{dcmin}} \cdot M_{spdwint}\right)\right)$$

$M_{spstr1pos} = 966.15$ ft·kip

$$M_{spstr1neg} := \gamma_{ll} \cdot M_{spllneg} + \gamma_{dc} \cdot min\left(\left(M_{spdcext} + \frac{\gamma_{dw}}{\gamma_{dc}} \cdot M_{spdwext}\right), \left(M_{spdcint} + \frac{\gamma_{dw}}{\gamma_{dc}} \cdot M_{spdwint}\right)\right)$$

$M_{spstr1neg} = -763.2$ ft·kip

$$V_{spllstr1} := \gamma_{ll} \cdot g_v \cdot \left((100\% + IM) \cdot \max\langle V_{sptan}, V_{spnmtt}, V_{sphs20}\rangle + \frac{0.64 \cdot klf}{1\ klf} \cdot \max\langle V_{sp1}, V_{sp12}, V_{sp13}, V_{sp123}\rangle\right)$$

$V_{spllstr1} = 132.66$ kip

$$V_{spstr1} := V_{spllstr1} + \max\left(\langle \gamma_{dc} \cdot V_{spdcint} + \gamma_{dw} \cdot V_{spdwint}\rangle, \langle \gamma_{dc} \cdot V_{spdcext} + \gamma_{dw} \cdot V_{spdwext}\rangle\right) = 174.52 \text{ kip}$$

$V_r = 315.91$ kip $75\% \cdot V_r = 236.93$ kip Ultimate shear Capacity & half thereof

$$V_{UW} := \frac{\langle V_r + V_{spstr1}\rangle}{2} = 245.22 \text{ kip}$$

6.13.6.1.4b-2 because Ultimate shear at the splice location is greater than 75% of the girder ultimate shear strength

$d := \frac{7}{8}$ in *diameter of A325 bolts*

CALDERWOOD ENGINEERING
222 RIVER ROAD
RICHMOND, ME 04357
PH. (207) 737-2007 FAX (207) 737-2008

Check Flange "Stresses" at strength I condition at the midthickness of the flanges, at the smaller section being spliced

$$y_{intfLL} := d_{beam} - y_{inst} - \frac{t_{tf}}{2} = 0.68 \text{ in} \qquad y_{inbfLL} := y_{inst} - \frac{t_{tf}}{2} = 35.39 \text{ in}$$

$$y_{extfLL} := d_{beam} - y_{exst} - \frac{t_{tf}}{2} = 2.03 \text{ in} \qquad y_{exbfLL} := y_{exst} - \frac{t_{tf}}{2} = 34.04 \text{ in}$$

$$y_{intfDL} := d_{beam} - y_{inlt} - \frac{t_{tf}}{2} = 6.42 \text{ in} \qquad y_{inbfDL} := y_{inlt} - \frac{t_{tf}}{2} = 29.64 \text{ in}$$

$$y_{extfDL} := d_{beam} - y_{exlt} - \frac{t_{tf}}{2} = 8.1 \text{ in} \qquad y_{exbfDL} := y_{exlt} - \frac{t_{tf}}{2} = 27.96 \text{ in}$$

$$y_{tfneg} := d_{beam} - y_{bar} - \frac{t_{tf}}{2} = 18.03 \text{ in} \qquad y_{bfneg} := y_{bar} - \frac{t_{tf}}{2} = 18.03 \text{ in}$$

$$f_{tfposin} := \frac{-1 \cdot \gamma_{ll} \cdot M_{spllpos} \cdot y_{intfLL}}{I_{intST}} + \frac{-1 \cdot \gamma_{dcmin} \cdot M_{spdcint} \cdot y_{intfDL}}{I_{intLT}} + \frac{-1 \cdot \gamma_{dwmin} \cdot M_{spdwint} \cdot y_{intfDL}}{I_{intLT}} = -0.17 \text{ ksi}$$

$$f_{bfposin} := \frac{\gamma_{ll} \cdot M_{spllpos} \cdot y_{inbfLL}}{I_{intST}} + \frac{\gamma_{dcmin} \cdot M_{spdcint} \cdot y_{inbfDL}}{I_{intLT}} + \frac{\gamma_{dwmin} \cdot M_{spdwint} \cdot y_{inbfDL}}{I_{intLT}} = 9.21 \text{ ksi}$$

$$f_{tfposex} := \frac{-1 \cdot \gamma_{ll} \cdot M_{spllpos} \cdot y_{extfLL}}{I_{extST}} + \frac{-1 \cdot \gamma_{dcmin} \cdot M_{spdcext} \cdot y_{extfDL}}{I_{extLT}} + \frac{-1 \cdot \gamma_{dwmin} \cdot M_{spdwext} \cdot y_{extfDL}}{I_{extLT}} = -0.58 \text{ ksi}$$

$$f_{bfposex} := \frac{\gamma_{ll} \cdot M_{spllpos} \cdot y_{inbfLL}}{I_{extST}} + \frac{\gamma_{dcmin} \cdot M_{spdcint} \cdot y_{inbfDL}}{I_{extLT}} + \frac{\gamma_{dwmin} \cdot M_{spdwint} \cdot y_{inbfDL}}{I_{extLT}} = 10.27 \text{ ksi}$$

$$f_{tfnegin} := \frac{-1 \cdot \langle \gamma_{ll} \cdot M_{spllneg} + \gamma_{dc} \cdot M_{spdcint} + \gamma_{dw} \cdot M_{spdwint} \rangle \cdot y_{tfneg}}{I_x} = 13.08 \text{ ksi}$$

$$f_{bfnegin} := \frac{\langle \gamma_{ll} \cdot M_{spllneg} + \gamma_{dc} \cdot M_{spdcint} + \gamma_{dw} \cdot M_{spdwint} \rangle \cdot y_{bfneg}}{I_x} = -13.08 \text{ ksi}$$

$$f_{tfnegex} := \frac{-1 \cdot \langle \gamma_{ll} \cdot M_{spllneg} + \gamma_{dc} \cdot M_{spdcext} + \gamma_{dw} \cdot M_{spdwext} \rangle \cdot y_{tfneg}}{I_x} = 13.07 \text{ ksi}$$

$$f_{bfnegex} := \frac{\langle \gamma_{ll} \cdot M_{spllneg} + \gamma_{dc} \cdot M_{spdcext} + \gamma_{dw} \cdot M_{spdwext} \rangle \cdot y_{bfneg}}{I_x} = -13.07 \text{ ksi}$$

By inspection the bottom flange is the controlling flange for positive moment and the top flange for negative moments

75% of yield strength of flanges will govern each flange by inspection

$F_{bfcomp} := F2_{rc} = 39.4\ ksi$ $\qquad f_{cfcomp} := |f_{bfnegin}| = 13.08\ ksi$

$F_{bftens} := \varphi_f \cdot F_y = 50\ ksi$ $\qquad f_{cftens} := |f_{tfnegin}| = 13.08\ ksi$

$f_{cf} := f_{cftens} = 13.08\ ksi$ $\qquad f_{ncf} := |f_{cfcomp}| = 13.08\ ksi$

$\alpha_{tf} := 1.0$ $\qquad \alpha_{cf} := \frac{F_{bfcomp}}{F_y} = 0.79$

$$F_{cf} := \max\left(\frac{\left(\left(\left(\frac{f_{cf}}{R_h}\right) + \alpha_{tf} \cdot \varphi_f \cdot F_y\right)\right)}{2}, 0.75 \cdot \alpha_{tf} \cdot \varphi_f \cdot F_y\right) = 37.5\ ksi \qquad (\textit{Tension})$$

$R_{cf} := \frac{F_{cf}}{f_{cf}} = 2.87$

$F_{ncf} := R_{cf} \cdot \frac{f_{ncf}}{R_h} = 37.5\ ksi$

$F_u := 70\ ksi$ *for AASHTO M270 Grade 50W per AASHTO LRFD Table 6.4.1-1*

$\varphi_{holes} := 1\ in$ $\qquad Rows := 4$ *Number of rows of bolts in flange splices*

$A_{gcf} := t_{tf} \cdot b_{tf} = 17\ in^2$ $\qquad A_{ncf} := t_{tf} \cdot (b_{tf} - Rows \cdot \varphi_{holes}) = 12.75\ in^2$ $\qquad \varphi_u := 0.8$

$A_{etcf} := \left(\frac{\varphi_u \cdot F_u}{\varphi_f \cdot F_y}\right) \cdot A_{ncf} = 14.28\ in^2$ $\qquad A_{eccf} := A_{gcf} = 17\ in^2$

$P_{tens} := A_{etcf} \cdot F_{cf} = 535.5\ kip$

Top & Bottom flanges will be designed for the same loads, flange splices will be identical to each other for fabrication efficiency, flange thicknesses do not require fill plates on either side of the splice

$P_{comp} := A_{gcf} \cdot F_{cf} = 637.5\ kip$

$t_{spo} := \frac{1}{2}\ in$ $\qquad b_{spo} := 16\ in$

$t_{spi} := \frac{1}{2}\ in$ $\qquad b_{spi} := 7.00\ in$

$A_{osp} := t_{spo} \cdot b_{spo} = 8\ in^2$ $\qquad A_{isp} := t_{spi} \cdot b_{spi} \cdot 2 = 7\ in^2$

$P_{tensosp} := P_{tens} \cdot \frac{A_{osp}}{A_{osp} + A_{isp}} = 285.6\ kip$ $\qquad P_{tensisp} := P_{tens} \cdot \frac{A_{isp}}{A_{osp} + A_{isp}} = 249.9\ kip$

$P_{composp} := P_{comp} \cdot \frac{A_{osp}}{A_{osp} + A_{isp}} = 340\ kip$ $\qquad P_{compisp} := P_{comp} \cdot \frac{A_{isp}}{A_{osp} + A_{isp}} = 297.5\ kip$

CALDERWOOD ENGINEERING
222 RIVER ROAD
RICHMOND, ME 04357
PH. (207) 737-2007 FAX (207) 737-2008

Splice plates in Tension:

$\varphi_y := 0.95$

$\varphi_y \cdot F_y \cdot A_{osp} = 380\ kip$ — *Yielding on the gross section for the outside splice plate > P tension for outside splice plate*

$\varphi_u \cdot F_u \cdot (A_{osp} - t_{spo} \cdot \varphi_{holes} \cdot Rows) = 336\ kip$ — *Fracture on the net section for the outside splice plate > P tension for outside Splice plate*

$\varphi_y \cdot F_y \cdot A_{isp} = 332.5\ kip$ — *Yielding on the gross section for the inside splice plate > P tension for inside splice plates*

$\varphi_u \cdot F_u \cdot (A_{isp} - t_{spi} \cdot \varphi_{holes} \cdot Rows) = 280\ kip$ — *Fracture on the net section for the outside splice plate > P tension for inside Splice plates*

Splice plates in Compression:

$\varphi_c := 0.90$ — *per 6.5.4.2 for steel in compression*

$\varphi_c \cdot F_y \cdot A_{osp} = 360\ kip$ — *Compression Resistance on Gross Area of Outside Splice plate > P Compression on outside splice plates therefor okay*

$\varphi_c \cdot F_y \cdot A_{isp} = 315\ kip$ — *Compression Resistance on Gross Area of inside Splice plate > P Compression on inside splice plates therefor okay*

Check # of Bolts required for Shear resistance:

$\varphi_s := 0.80$ — *6.5.4.2 for ASTM A325 bolts*

$A_b := 0.60\ in^2$ $\quad N_s := 1$ — *Figured in single shear as outside splice plate has a higher load in it than the inside splice plate and therefore will govern the number of bolts needed for both slip & strength*

$F_{ub} := 120\ ksi$

$R_n := 0.48 \cdot A_b \cdot F_{ub} \cdot N_s = 34.56\ kip$ — *nominal shear of a single7/8" bolt in single shear*

$R_r := \varphi_s \cdot R_n = 27.65\ kip$ — *Resistance of a single 7/8" bolt in single shear*

$N_{bf} := \dfrac{\max(P_{composp}, P_{tensosp})}{R_r} = 12.3$ — *Use four rows of four bolts for a total of 16 bolts in each flange splice*

$N_{bf} := 16$

$R_{rtot} := R_r \cdot N_{bf} = 442.37\ kip$

CALDERWOOD ENGINEERING
222 RIVER ROAD
RICHMOND, ME 04357
PH. (207) 737-2007 FAX (207) 737-2008

Check Block Shear:

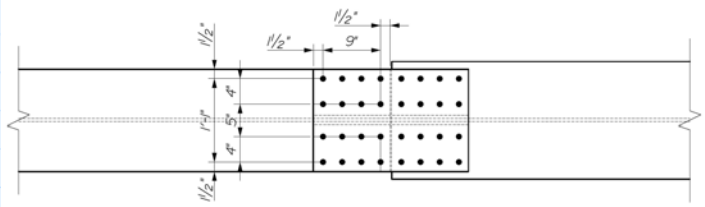

Block Shear outside splice plate

$$A_{vn1} := 2 \cdot \left(3\ \text{in} \cdot 3 + 1.5\ \text{in} - \varphi_{holes} \cdot \left(2 + \frac{1}{2} \cdot 2\right)\right) \cdot t_{spo} = 7.5\ \text{in}^2$$

$$A_{tn1} := 2 \cdot \left(1.5\ \text{in} - \varphi_{holes} \cdot 1.5 + 4\ \text{in}\right) \cdot t_{spo} = 4\ \text{in}^2$$

$$A_{vg1} := 2 \cdot \left(3\ \text{in} \cdot 3 + 1.5\ \text{in}\right) \cdot t_{spo} = 10.5\ \text{in}^2$$

$R_p := 1.0$ *For holes drilled full size or sub-punched and reamed* $\varphi_{bs} := 0.80$ $U_{bs} := 1.0$

$$R_{rsp1} := \varphi_{bs} \cdot R_p \cdot \left(0.58 \cdot F_u \cdot A_{vn1} + U_{bs} \cdot F_u \cdot A_{tn1}\right) = 467.6\ \text{kip}$$

$$R_{rsp2} := \varphi_{bs} \cdot R_p \cdot \left(0.58 \cdot F_y \cdot A_{vg1} + U_{bs} \cdot F_u \cdot A_{tn1}\right) = 467.6\ \text{kip}$$

$R_{rsp} := min\left(R_{rsp1}, R_{rsp2}\right) = 467.6\ \text{kip}$ *For Outside Splice Plates block shear*

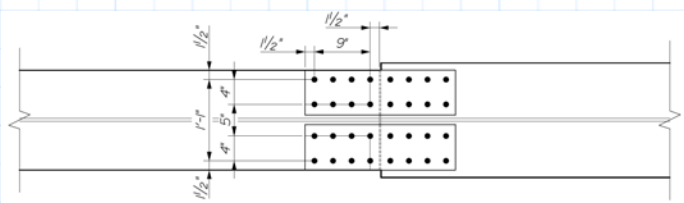

Block Shear inside splice plate

For Inside Splice Plates block shear the Net Area in Shear, Gross area in shear, and net area in tension are all the same as for the outside splice plates, the resulting Resisting force is therefore also the same.

$R_{rsp} = 467.6\ \text{kip}$

CALDERWOOD ENGINEERING
222 RIVER ROAD
RICHMOND, ME 04357
PH. (207) 737-2007 FAX (207) 737-2008

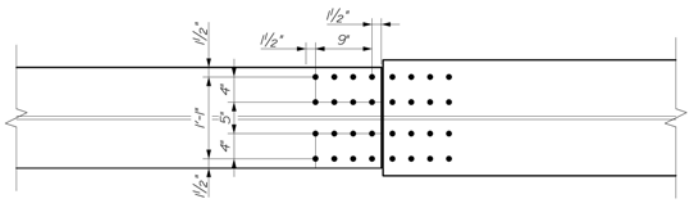

Block Shear flanges

$$A_{vn2} := 2 \cdot \left(3\ \text{in} \cdot 3 + 1.5\ \text{in} - \varphi_{holes} \cdot \left(2 + \frac{1}{2} \cdot 2\right)\right) \cdot t_{tf} = 15.94\ \text{in}^2$$

$$A_{tn2} := 2 \cdot \left(1.5\ \text{in} - \varphi_{holes} \cdot 1.5 + 4\ \text{in}\right) \cdot t_{tf} = 8.5\ \text{in}^2$$

$$A_{vg2} := 2 \cdot \left(3\ \text{in} \cdot 3 + 1.5\ \text{in}\right) \cdot t_{tf} = 22.31\ \text{in}^2$$

$$R_{rf1} := \varphi_{bs} \cdot R_p \cdot \left(0.58 \cdot F_u \cdot A_{vn2} + U_{bs} \cdot F_u \cdot A_{tn2}\right) = 993.65\ \text{kip}$$

$$R_{rf2} := \varphi_{bs} \cdot R_p \cdot \left(0.58 \cdot F_y \cdot A_{vg2} + U_{bs} \cdot F_u \cdot A_{tn2}\right) = 993.65\ \text{kip}$$

$$R_{rf} := \max\left(R_{rf1}, R_{rf2}\right) = 993.65\ \text{kip}$$

For Flange Plates block shear capacity greater than Ptens & Pcomp therefor okay

Check Slip at Service II loading (outer splice plate to flange surface governs)

$$f_{tfposinsvc2} := \frac{-1 \cdot \gamma_{llsvc2} \cdot M_{spllpos} \cdot y_{intfLL}}{I_{intST}} + \frac{-1 \cdot \gamma_{dcsvc2} \cdot M_{spdcint} \cdot y_{intfDL}}{I_{intLT}} + \frac{-1 \cdot \gamma_{dwsvc2} \cdot M_{spdwint} \cdot y_{intfDL}}{I_{intLT}} = -0.12 \text{ ksi}$$

$$f_{bfposinsvc2} := \frac{\gamma_{llsvc2} \cdot M_{spllpos} \cdot y_{inbfLL}}{I_{intST}} + \frac{\gamma_{dcsvc2} \cdot M_{spdcint} \cdot y_{inbfDL}}{I_{intLT}} + \frac{\gamma_{dwsvc2} \cdot M_{spdwint} \cdot y_{inbfDL}}{I_{intLT}} = 6.82 \text{ ksi}$$

$$f_{tfposexsvc2} := \frac{-1 \cdot \gamma_{llsvc2} \cdot M_{spllpos} \cdot y_{extfLL}}{I_{extST}} + \frac{-1 \cdot \gamma_{dcsvc2} \cdot M_{spdcext} \cdot y_{extfDL}}{I_{extLT}} + \frac{-1 \cdot \gamma_{dwsvc2} \cdot M_{spdwext} \cdot y_{extfDL}}{I_{extLT}} = -0.43 \text{ ksi}$$

$$f_{bfposexsvc2} := \frac{\gamma_{llsvc2} \cdot M_{spllpos} \cdot y_{inbfLL}}{I_{extST}} + \frac{\gamma_{dcsvc2} \cdot M_{spdcint} \cdot y_{inbfDL}}{I_{extLT}} + \frac{\gamma_{dwsvc2} \cdot M_{spdwint} \cdot y_{inbfDL}}{I_{extLT}} = 7.61 \text{ ksi}$$

$$f_{tfneginsvc2} := \frac{-1 \cdot \left(\gamma_{llsvc2} \cdot M_{spllneg} + \gamma_{dcsvc2} \cdot M_{spdcint} + \gamma_{dwsvc2} \cdot M_{spdwint}\right) \cdot y_{tfneg}}{I_x} = 9.72 \text{ ksi}$$

$$f_{bfneginsvc2} := \frac{\left(\gamma_{llsvc2} \cdot M_{spllneg} + \gamma_{dcsvc2} \cdot M_{spdcint} + \gamma_{dwsvc2} \cdot M_{spdwint}\right) \cdot y_{bfneg}}{I_x} = -9.72 \text{ ksi}$$

$$f_{tfnegexsvc2} := \frac{-1 \cdot \left(\gamma_{llsvc2} \cdot M_{spllneg} + \gamma_{dcsvc2} \cdot M_{spdcext} + \gamma_{dwsvc2} \cdot M_{spdwext}\right) \cdot y_{tfneg}}{I_x} = 9.71 \text{ ksi}$$

$$f_{bfnegexsvc2} := \frac{\left(\gamma_{llsvc2} \cdot M_{spllneg} + \gamma_{dcsvc2} \cdot M_{spdcext} + \gamma_{dwsvc2} \cdot M_{spdwext}\right) \cdot y_{bfneg}}{I_x} = -9.71 \text{ ksi}$$

Negative moment stresses govern
flange & splice capacity

$P_{svc2} := \left|f_{bfneginsvc2} \cdot b_{bf} \cdot t_{bf}\right| = 165.27 \text{ kip}$ *Service Load total force compression in bottom flange. Tension in top flange will be the same by inspection.*

$P_{svc2spo} := P_{svc2} \cdot \frac{A_{osp}}{A_{osp} + A_{isp}} = 88.15 \text{ kip}$ *Design Slip force between outside splice plate & Flange top or bottom.*

$K_h := 1.0$ *Bolts are standard sized*

$K_s := 0.50$ *Class B Slip Condition*

$N_s = 1$ *1 Plane between outside splice plate & flange*

$P_t := 39 \text{ kip}$ *For A325 Bolts*

$R_{nslip} := K_h \cdot K_s \cdot N_s \cdot P_t = 19.5 \text{ kip}$ *per bolt*

$R_{rslip_flanges} := R_{nslip} \cdot N_{bf} = 312 \text{ kip}$ *> Svc 2 slip demand between outter splice plate and flange, resistance at inner splice plate is the same, but demand is less, inner splice plate is okay for svc 2 slip by inspection*

CALDERWOOD ENGINEERING
222 RIVER ROAD
RICHMOND, ME 04357
PH. (207) 737-2007 FAX (207) 737-2008

Check Bearing capacity at bolt holes

$L_c := 1.5\ in - \frac{\varphi_{holes}}{2} = 1\ in$ $\varphi_{bb} := 0.80$

$R_{nbrg1} := 1.2 \cdot L_c \cdot t_{spo} \cdot F_u = 42\ kip$

per end bolts in outter splice plate which governs over the inner splice plates and the flange

$R_{nbrg2} := 2.4 \cdot d \cdot t_{spo} \cdot F_u = 73.5\ kip$

per interior bolts in outter splice plate which governs over the inner splice plates and the flange

$R_{rbrg} := \varphi_{bb} \cdot min\left(R_{nbrg1}, R_{nbrg2}\right) = 33.6\ kip$

$P_{brgmax} := \frac{P_{composp}}{N_{bf}} = 21.25\ kip$

Maximum Bearing on splice plate end bolts less than factored resistance per end bolt therefor okay

$n := 11$ #of bolts in a vertical row

$m := 2$ # of vertical rows of bolts

$s := 3\ in$ Vertical Pitch

$g := 3\ in$ Horizontal Pitch

$t_{spw} := 0.5\ in$

$D_{spw} := (n-1)\cdot s + 2\cdot(1.75\ in)$

$D_{spw} = 33.5\ in$

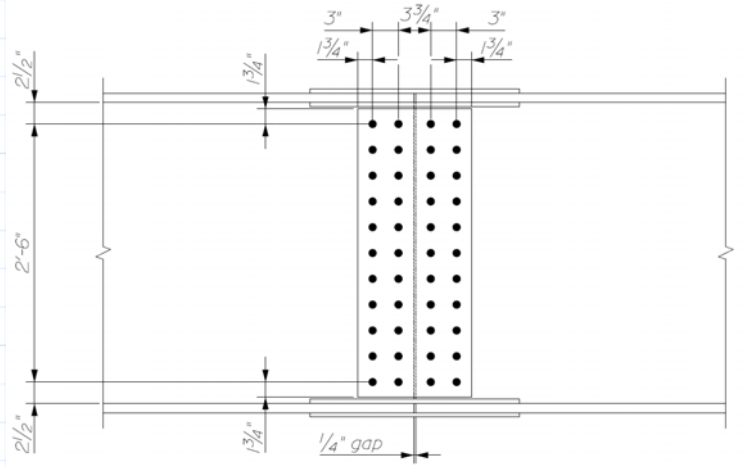

$$e := \frac{(m-1)}{2}\cdot g + \frac{3.75}{2}\cdot in = 3.375\ in$$

Includes 1/4" gap between web between girders at splice

$$I_p := n\cdot\frac{m}{12}\cdot\left(s^2\cdot\left(n^2-1\right)+g^2\cdot\left(m^2-1\right)\right) = 2029.5\ \frac{in^4}{in^2}$$ *C6.13.6.1.4b-3*

$$M_{UV} := V_{UW}\cdot e = 68.97\ ft\cdot kip$$

From Previous Calculations for Negative Flexure:

$F_{cfneg} := F_{cf} = 37.5\ ksi$ $D = 35\ in$ $R_h = 1$

$F_{ncfneg} := -F_{ncf} = -37.5\ ksi$ $t_w = 0.44\ in$

$$M_{uwneg} := \frac{t_w\cdot D^2}{12}\cdot\left(R_h\cdot F_{cfneg} - F_{ncfneg}\right) = 279.1341\ ft\cdot kip$$

$$H_{uwneg} := \frac{t_w\cdot D}{2}\cdot\left(R_h\cdot F_{cfneg} + F_{ncfneg}\right) = 0\ kip$$

Horizontal load in web = zero as top & bottom flange stresses are the same at negative moment condition (ie sum of flange stresses = 0)

From Previous Calculations for Positive Flexure:

$F_{cfpos} := 0.75\cdot F_y = 37.5\ ksi$

$$R_{cfpos} := \frac{F_{cfpos}}{f_{bfposex}} = 3.65$$

$R_{cfpos}\cdot f_{tfposex} = -2.12\ ksi$

$$M_{uwpos} := \frac{t_w\cdot D^2}{12}\cdot\left(R_h\cdot F_{cfpos} - R_{cfpos}\cdot f_{tfposex}\right) = 147.47\ ft\cdot kip$$

$$H_{uwpos} := \frac{t_w\cdot D}{2}\cdot\left(R_h\cdot F_{cfpos} + R_{cfpos}\cdot f_{tfposex}\right) = 270.86\ kip$$

CALDERWOOD ENGINEERING
222 RIVER ROAD
RICHMOND, ME 04357
PH. (207) 737-2007 FAX (207) 737-2008

$N_{bw} := m \cdot n = 22$

$x := e + g = 6.38$ in $\qquad y := (n-1) \cdot \frac{s}{2} = 15$ in

$M_{tot1} := M_{uwneg} + M_{UV} = 348.1$ ft·kip

$P_{s1} := \frac{V_{UW}}{N_{bw}} = 11.15$ kip $\qquad P_{h1} := \frac{H_{uwneg}}{N_{bw}} = 0$ kip

$P_{mv1} := \frac{M_{tot1} \cdot x}{I_p} = 13.12$ kip

$P_{mh1} := \frac{M_{tot1} \cdot y}{I_p} = 30.87$ kip

$P_{max1} := \sqrt{(P_{mv1} + P_{s1})^2 + (P_{mh1} + P_{h1})^2} = 39.27$ kip

$M_{tot2} := M_{uwpos} + M_{UV} = 216.43$ ft·kip

$P_{s2} := P_{s1} = 11.15$ kip $\qquad P_{h2} := \frac{H_{uwpos}}{N_{bw}} = 12.31$ kip

$P_{mv2} := \frac{M_{tot2} \cdot x}{I_p} = 8.16$ kip $\qquad P_{mh2} := \frac{M_{tot2} \cdot y}{I_p} = 19.2$ kip

$P_{max2} := \sqrt{(P_{mv2} + P_{s2})^2 + (P_{mh2} + P_{h2})^2} = 36.95$ kip

CALDERWOOD ENGINEERING
222 RIVER ROAD
RICHMOND, ME 04357
PH. (207) 737-2007 FAX (207) 737-2008

Check Bearing capacity at bolt holes from bolt to web material

$L_{cw} := 1.75\ in - \frac{\varphi_{holes}}{2} = 1.25\ in$ $\varphi_{bb} := 0.80$

$R_{nbrg3} := 1.2 \cdot L_{cw} \cdot t_{spo} \cdot F_u = 52.5\ kip$ *per extreme bolt location in web to end of web plate*

$R_{nbrg4} := 2.4 \cdot d \cdot t_w \cdot F_u = 64.31\ kip$ *per interior bolt locations in web*

$R_{rbrg} := \varphi_{bb} \cdot min\langle R_{nbrg3}, R_{nbrg4}\rangle = 42\ kip$ *Maximum Bearing on web thickness at extreme bolt locations*

Maximum bearing at web locations is less than the factored bearing resistance on the web thickness therefore bolts are okay in bearing because all remaining bolts will have less load on them than the extreme bolt locations.

CALDERWOOD ENGINEERING
222 RIVER ROAD
RICHMOND, ME 04357
PH. (207) 737-2007 FAX (207) 737-2008

Check slip resistance at extreme bolt location (Service II) flange stresses at mid thickness of flanges from previous computations exterior girder controls for positive moment & interior for negative moment:

$f_{tfposinsvc2} = -0.12$ ksi $\quad f_{tfposexsvc2} = -0.43$ ksi $\quad f_{tfnegexsvc2} = 9.71$ ksi $\quad f_{tfneginsvc2} = 9.72$ ksi

$f_{bfposinsvc2} = 6.82$ ksi $\quad f_{bfposexsvc2} = 7.61$ ksi $\quad f_{bfnegexsvc2} = -9.71$ ksi $\quad f_{bfneginsvc2} = -9.72$ ksi

$$M_{s1} := \frac{t_w \cdot D^2}{12} \cdot \left|\left(f_{bfposexsvc2} - f_{tfposexsvc2}\right)\right| = 29.93 \text{ ft·kip} \qquad H_{s1} := \frac{t_w \cdot D}{2} \cdot \left(f_{bfposexsvc2} + f_{tfposexsvc2}\right) = 55.02 \text{ kip}$$

$$M_{s2} := \frac{t_w \cdot D^2}{12} \cdot \left|\left(f_{bfneginsvc2} - f_{tfneginsvc2}\right)\right| = 72.37 \text{ ft·kip} \qquad H_{s2} := \frac{t_w \cdot D}{2} \cdot \left(f_{bfneginsvc2} + f_{tfneginsvc2}\right) = 0 \text{ kip}$$

$V_S = 130.66$ kip

$$M_{sv} := V_S \cdot e = 36.75 \text{ ft·kip}$$

$$M_{svc1} := M_{s1} + M_{sv} = 66.68 \text{ ft·kip} \qquad M_{svc2} := M_{s2} + M_{sv} = 109.11 \text{ ft·kip}$$

$$P_{sv1} := \frac{M_{svc1} \cdot x}{I_p} = 2.51 \text{ kip} \qquad P_s := \frac{V_S}{N_{bw}} = 5.94 \text{ kip}$$

$$P_{sh1} := \frac{M_{svc1} \cdot y}{I_p} = 5.91 \text{ kip} \qquad P_{h1} := \frac{H_{s1}}{N_{bw}} = 2.5 \text{ kip}$$

$$P_{1svc2} := \sqrt{\left(P_{sv1} + P_s\right)^2 + \left(P_{sh1} + P_{h1}\right)^2} = 11.93 \text{ kip}$$

$$P_{sv2} := \frac{M_{svc2} \cdot x}{I_p} = 4.11 \text{ kip} \qquad P_s := \frac{V_S}{N_{bw}} = 5.94 \text{ kip}$$

$$P_{sh2} := \frac{M_{svc2} \cdot y}{I_p} = 9.68 \text{ kip} \qquad P_{h2} := \frac{H_{s2}}{N_{bw}} = 0 \text{ kip}$$

$$P_{2svc2} := \sqrt{\left(P_{sv2} + P_s\right)^2 + \left(P_{sh2} + P_{h2}\right)^2} = 13.95 \text{ kip}$$

$K_h = 1$ *Bolts are standard sized*

$K_s = 0.5$ *Class B Slip Condition*

$N_{s2} := 2$ *2 Plane between web & web plates*

$P_t = 39$ kip *For A325 Bolts*

$R_{nslipweb} := K_h \cdot K_s \cdot N_{s2} \cdot P_t = 39$ kip *per bolt >> Maximum Svc II slip load therefor web splice is okay for slip resistance at Svc II load case*

Check Flexural Yielding of Gross Section of web splice plates at strength limit state:

$M_{tot1} = 348.1\ ft{\cdot}kip$ $\qquad$ $M_{tot2} = 216.43\ ft{\cdot}kip$

$$S_{pl} := \frac{2 \cdot t_{spw} \cdot D_{spw}^{2}}{6} = 187.04\ in^{3}$$

$$A_{plg} := 2 \cdot t_{spw} \cdot D_{spw} = 33.5\ in^{2}$$

$$f_{flex1} := \frac{M_{tot1}}{S_{pl}} + \frac{H_{uwneg}}{A_{plg}} = 22.33\ ksi$$

$$f_{flex2} := \frac{M_{tot2}}{S_{pl}} + \frac{H_{uwpos}}{A_{plg}} = 21.97\ ksi$$

$\varphi_f \cdot F_y = 50\ ksi$ $\qquad$ *>> flexural stress at strength I for both maximum positive & negative moments expected at splice plates therefor okay*

Check Shear yielding of the gross section of the splice plates:

$V_{UW} = 245.22\ kip$ $\qquad$ $\frac{V_{UW}}{A_{plg}} = 7.32\ ksi$

$0.58 \cdot \varphi_v \cdot F_y = 29\ ksi$ $\qquad$ *>> Shear stress at web splice plates*

CALDERWOOD ENGINEERING
222 RIVER ROAD
RICHMOND, ME 04357
PH. (207) 737-2007 FAX (207) 737-2008

Fatigue stresses at the bolted field splice: Stress at Net section

$\gamma_{fatI} := 1.5$

$\Delta F_B := \Delta_{thB} = 16\ ksi$

Calculation of section modulus through Net section of Splice plates only without regard for concrete deck Actual stresses are expected to be less than those calculated here - Fatigue Cat B for Slip Critical Bolted Joints

$$I_{osp} := \frac{t_{spo}^3 \cdot (b_{spo} - \varphi_{holes} \cdot Rows)}{12} = 0.13\ in^4 \qquad I_{isp} := 2 \cdot \frac{t_{spi}^3 \cdot (b_{spi} - \varphi_{holes} \cdot Rows)}{12} = 0.06\ in^4$$

$$I_{wspg} := 2 \cdot \frac{t_{spw} \cdot (D_{spw})^3}{12} = 3132.95\ in^4$$

$$I_{deduct} := \frac{-2 \cdot n \cdot t_{spw} \cdot \varphi_{holes}^3}{12} - 2 \cdot t_{spw} \cdot \varphi_{holes} \cdot 2 \cdot (3^2\ in^2 + 6^2\ in^2 + 9^2\ in^2 + 12^2\ in^2 + 15^2\ in^2) = -990.92\ in^4$$

$$I_{wspn} := I_{wspg} + I_{deduct} = 2142.03\ in^4$$

$$I_{ospnet} := 2 \cdot \left(I_{osp} + (b_{spo} - Rows \cdot \varphi_{holes}) \cdot t_{spo} \cdot \left(\frac{d_{beam}}{2} + \frac{t_{spo}}{2} \right)^2 \right) = 4247.17\ in^4$$

$$I_{ispnet} := 2 \cdot \left(I_{isp} + (2 \cdot b_{spi} - Rows \cdot \varphi_{holes}) \cdot t_{spi} \cdot \left(\frac{d_{beam}}{2} - t_{tf} - t_{bf} - \frac{t_{spi}}{2} \right)^2 \right) = 2620.48\ in^4$$

$$I_{spnet} := I_{wspn} + I_{ospnet} + I_{ispnet} = 9009.68\ in^4$$

$$S_{spnet} := \frac{I_{spnet}}{\left(\frac{d_{beam} + t_{spo}}{2} \right)} = 478.92\ in^3$$

$$f_{fatmax} := \gamma_{fatI} \cdot \frac{(100\% + IM_{fat})\ M_{spfatmax}}{S_{spnet}} \cdot g_{posfatm} = 9.61\ ksi$$

$$f_{fatmin} := \gamma_{fatI} \cdot \frac{(100\% + IM_{fat}) \cdot M_{spfatmin}}{S_{spnet}} \cdot g_{negfatm} = -6.87\ ksi$$

Stresses are less than the fatigue stress threshold for detail category B and therefor infinite life is expected

CALDERWOOD ENGINEERING
222 RIVER ROAD
RICHMOND, ME 04357
PH. (207) 737-2007 FAX (207) 737-2008

Calculation of section modulus through Net section of Girder only without regard for concrete deck Actual stresses are expected to be less than those calculated here - Fatigue Cat B for Slip Critical Bolted Joints

$$I_{nf} := \frac{(b_{tf} - Rows \cdot \varphi_{holes}) \cdot t_{tf}^{3}}{12} = 1.2\ in^{4}$$

Calculated for Top flange (btm flange the same)

$$I_{oxw} = 1563.15\ in^{4}$$

$$I_{webdeduct} := \frac{-n \cdot t_w \cdot \varphi_{holes}^{3}}{12} - t_w \cdot \varphi_{holes} \cdot 2 \cdot \left(3^2\ in^2 + 6^2\ in^2 + 9^2\ in^2 + 12^2\ in^2 + 15^2\ in^2\right) = -433.53\ in^{4}$$

$$I_{webnet} := I_{oxw} + I_{webdeduct} = 1129.63\ in^{4}$$

$$A_{netflange} := (b_{tf} - \varphi_{holes}) \cdot t_{tf} = 15.94\ in^{2}$$

$$I_{netgirder} := I_{webnet} + 2 \cdot I_{nf} + 2 \cdot \left(A_{netflange} \cdot \left(\frac{d_{beam}}{2} - \frac{t_{tf}}{2}\right)^{2}\right) = 11495.41\ in^{4}$$

$$S_{netgirder} := \frac{I_{netgirder}}{\left(\frac{d_{beam}}{2}\right)} = 619.28\ in^{3}$$

$$f_{gfatmax} := \gamma_{fatI} \cdot \frac{(100\% + IM_{fat})\ M_{spfatmax}}{S_{netgirder}} \cdot g_{posfatm} = 7.43\ ksi$$

$$f_{gfatmin} := \gamma_{fatI} \cdot \frac{(100\% + IM_{fat}) \cdot M_{spfatmin}}{S_{netgirder}} \cdot g_{negfatm} = -5.31\ ksi$$

Stresses are less than the fatigue stress threshold for detail category B and therefor infinite life is expected