Job: ROCKINGHAM BRF 0126(12)

JOINT WELDING
PROCEDURE SPECIFICATION

MATERIAL SPEC	ASTM A572 GR 50
WELDING PROCESS	SMAW
MANUAL OR MACHINE	MAUAL
POSITION OF WELDING	HORIZONTAL OR VERTICAL
FILLER METAL SPEC	AWS A5.1
FILLER METAL CLASSIFICATION	E7018
FLUX	N/A
SHIELDING GAS	N/A
SINGLE OR MULTIPLE PASS	MULTIPLE IF REQUIRED
SINGLE OR MULTIPLE ARC	SINGLE
WELDING CURRENT	DC
POLARITY	REVERSE
WELDING PROCEDURE	N/A
ROOT TREATMENT	POINTS ARE PRE-BEVELED TO PROFILE
PREHEAT AND INTERPASS TEMPERATURE	PER AWS D1.1
POST HEAT TREATMENT	NONE

WELDING PROCEDURE

PASS #	ELECTRODE SIZE	WELDING CURRENT AMPS	WELDING CURRENT VOLT	TRAVEL SPEED	JOINT DETAIL
1	1/8"	120-150	12-24	1 FT/MIN	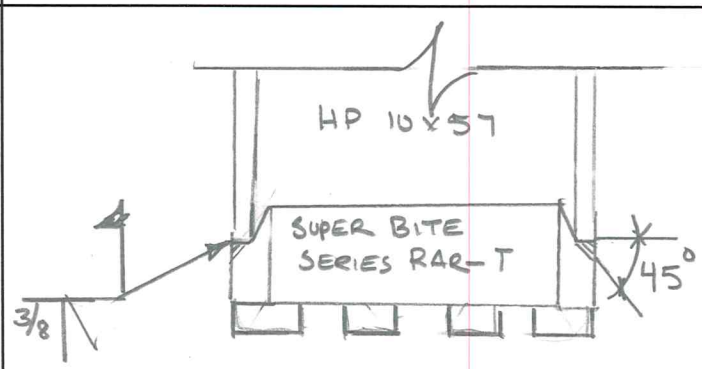
2+	5/32"	140-180	12-24	1FT/MIN	

This procedure may varry due to fabrication sequence,fit-up,pass size, ect. Within the limitations of variables given in section 5

REV Ø
PROCEDURE - PILE POINT
CONTRACTOR: COLD RIVER BRIDGES, LLC

DATE: 10/31/2014

SUPER BITE POINT – Series PAR-T

Dimensions

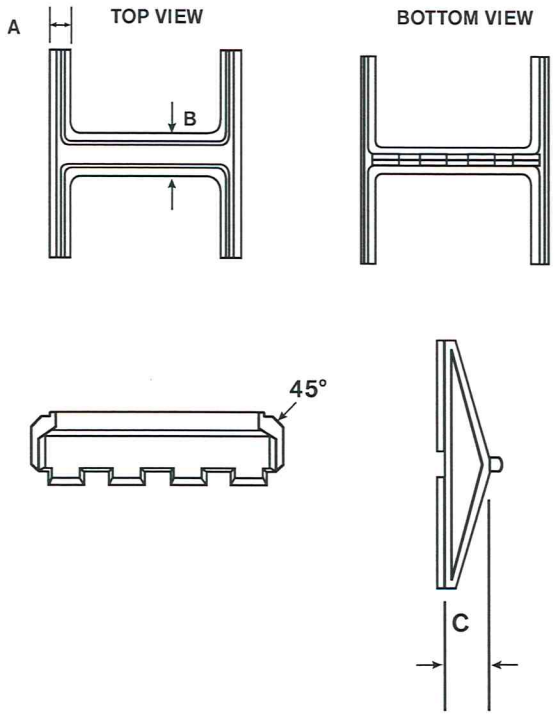

ASTM A148 90/60 - Heat Treated

	10"	12"	14"
A	1"	1-1/4"	1-1/4"
B	1-1/4"	1-7/16"	1-3/4"
C	2-9/16"	2-5/8"	2-15/16
WT	14	23	30

NORMAL FOUNDRY TOLERANCES APPLY

Installation Instructions

Super Bite Point Series PAR-T

1. Fit point onto the end of the square cut pile end.
2. Weld point to the pile in either flat or vertical position using E7018 electrodes.
3. Weld across full width of flange following chart below for minimum size weld.

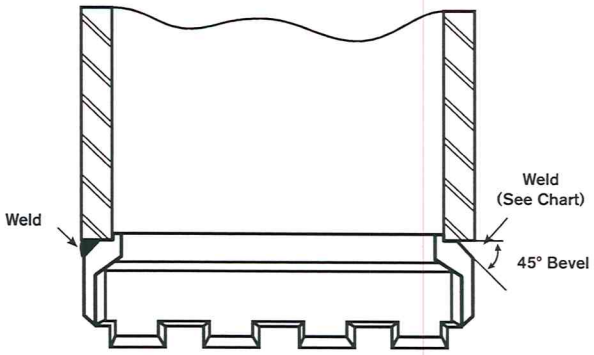

Pile Size	Flange Thickness	Min. Size Groove Weld
HP 14 x 117	.805	7/16
x 102	.705	3/8
x 89	.615	3/8
x 73	.505	5/16
HP 12 x 84	.685	3/8
x 74	.610	3/8
x 63	.515	5/16
x 53	.435	5/16
HP 10 x 57	.565	5/16
x 42	.420	5/16

ASSOCIATED PILE & FITTING

PO Box 5933 Parsippany, NJ 07054-5933
Tel: 973-773-8400
Fax: 973-428-5146
email: apf@associatedpile.com
www.associatedpile.com
Call Toll Free: 800-526-9047

(12/11)