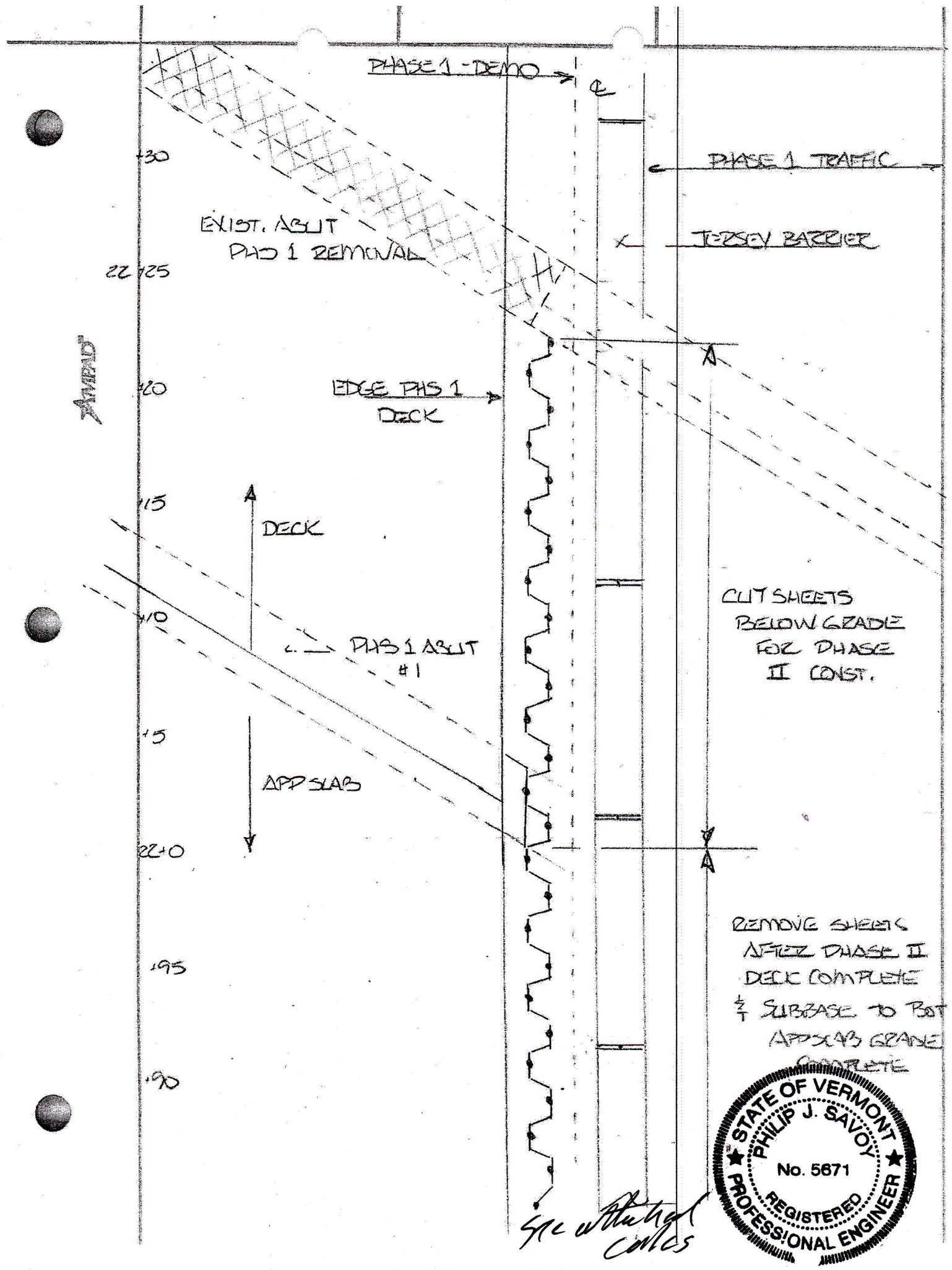
PHASE 1 - DEMO
℄
PHASE 1 TRAFFIC
JERSEY BARRIER
EXIST. ABUT
PHS 1 REMOVAL
EDGE PHS 1
DECK
DECK
PHS 1 ABUT
#1
APP SLAB
CUT SHEETS
BELOW GRADE
FOR PHASE
II CONST.
REMOVE SHEETS
AFTER PHASE II
DECK COMPLETE
& SUBBASE TO BOT
APP SLAB GRADE
COMPLETE
+30
22+25
+20
+15
+10
+5
22+0
+95
+90
A
A
See attached
calcs
STATE OF VERMONT
PHILIP J. SAVOY
No. 5671
REGISTERED
PROFESSIONAL ENGINEER

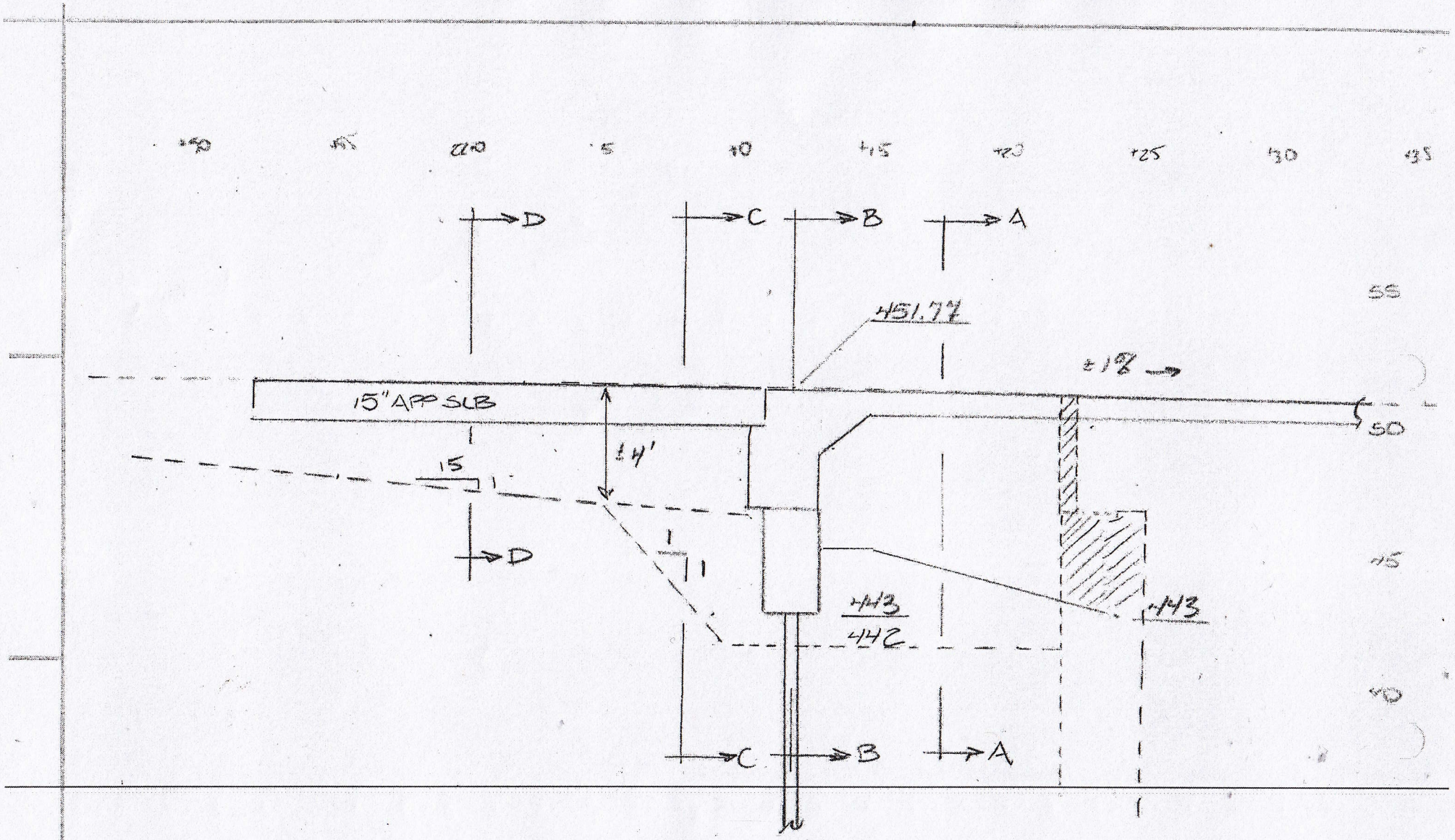

ABUT #1 (WEST) PROFILE

1" = 10'

PROFESSIONAL ENGINEER ★ STATE OF VERMONT ★ PHILIP J. SAVOY REGISTERED No. 5871

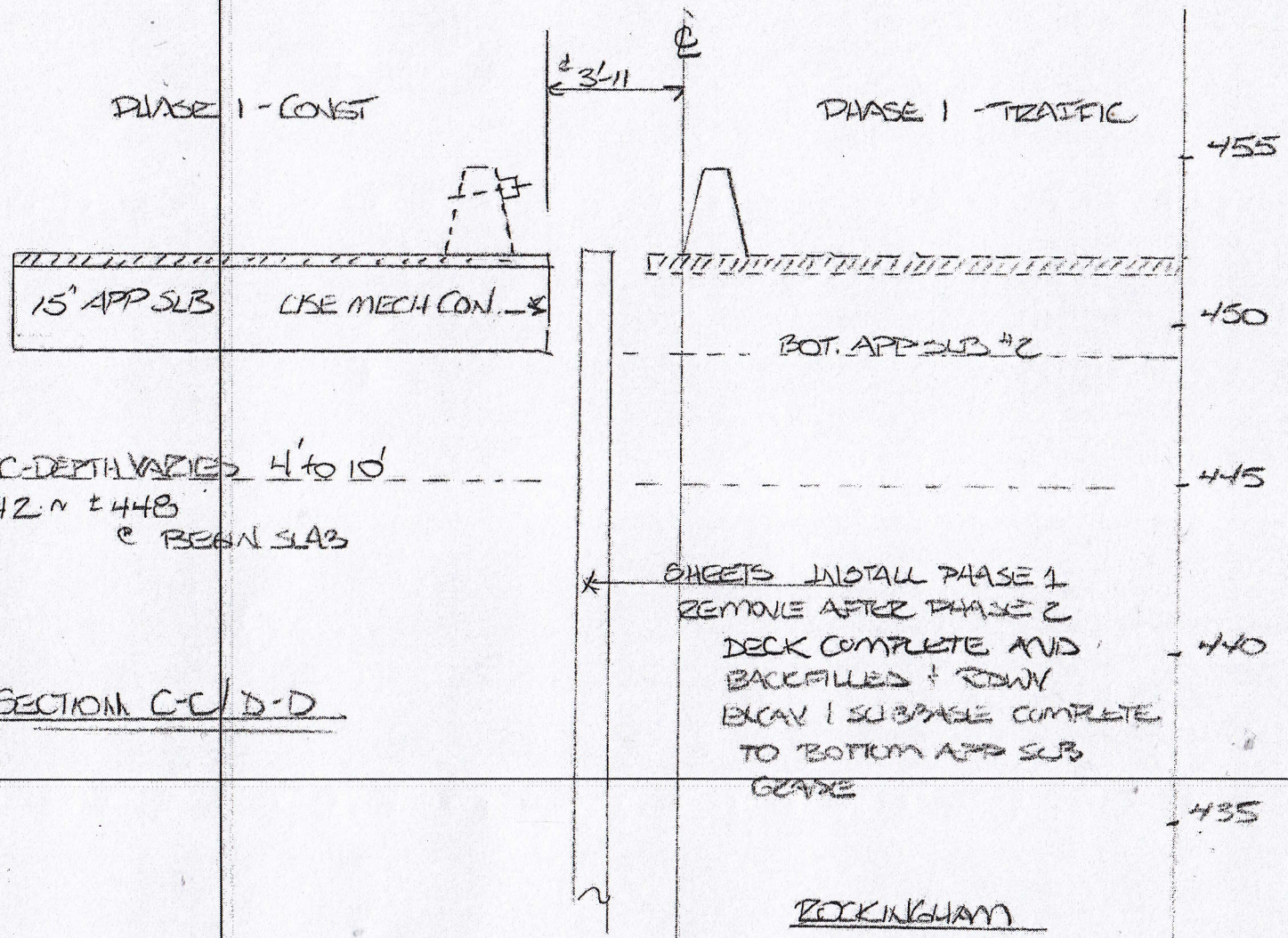

STATE OF VERMONT
PHILIP J. SAVOY
No. 5871
REGISTERED PROFESSIONAL ENGINEER

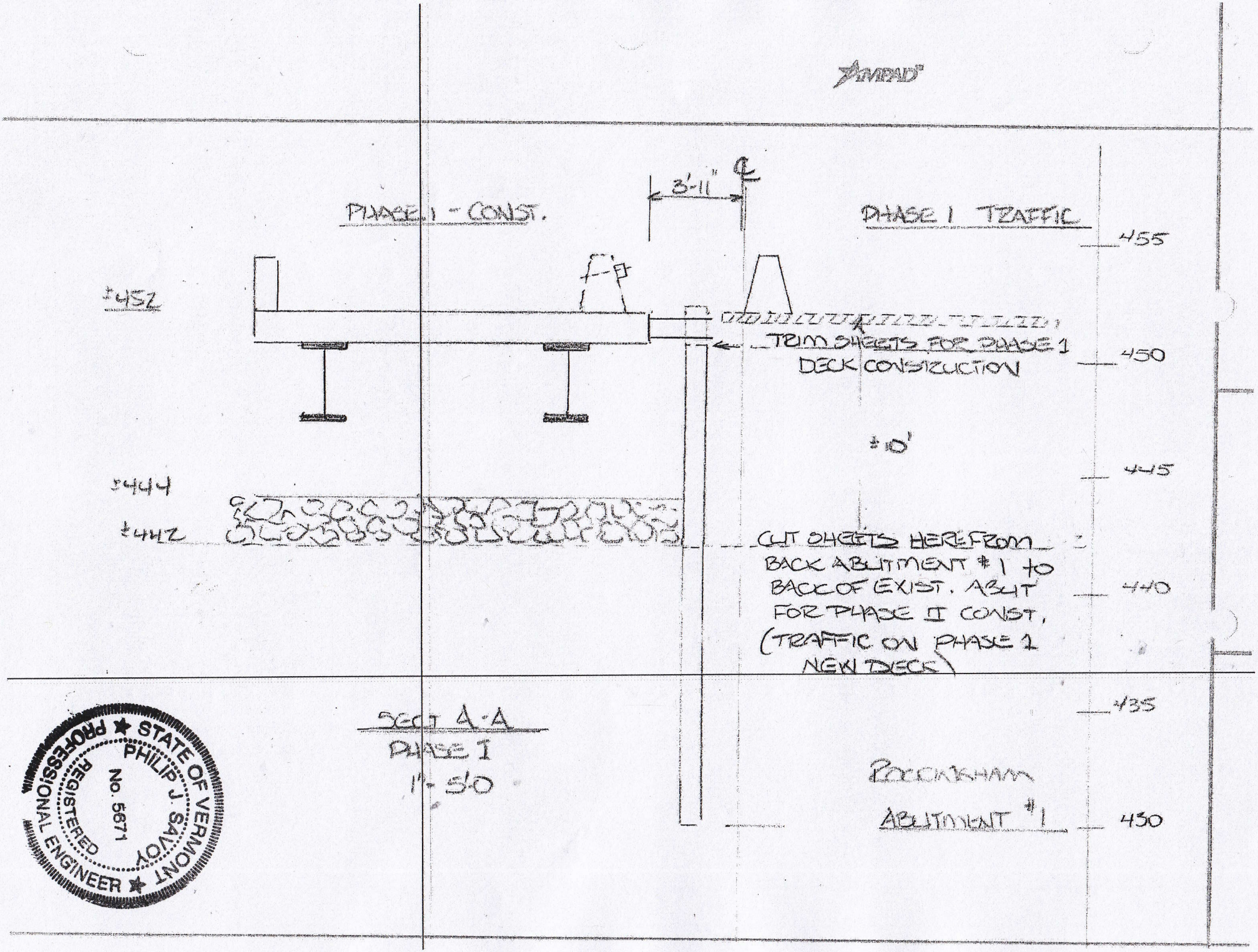
AMPAD
PHASE I - CONST.
3'-11"
℄
PHASE I TRAFFIC
455
±452
TRIM SHEETS FOR PHASE 1
DECK CONSTRUCTION
450
±10'
445
±444
±442
CUT SHEETS HEREFROM
BACK ABUTMENT #1 to
BACK OF EXIST. ABUT
FOR PHASE II CONST.
(TRAFFIC ON PHASE 1
NEW DECK)
440
435
SECT A-A
PHASE I
1"-5'0
ROCKINGHAM
ABUTMENT #1
430
STATE OF VERMONT
PHILIP J. SAVOY
No. 5671
REGISTERED
PROFESSIONAL ENGINEER

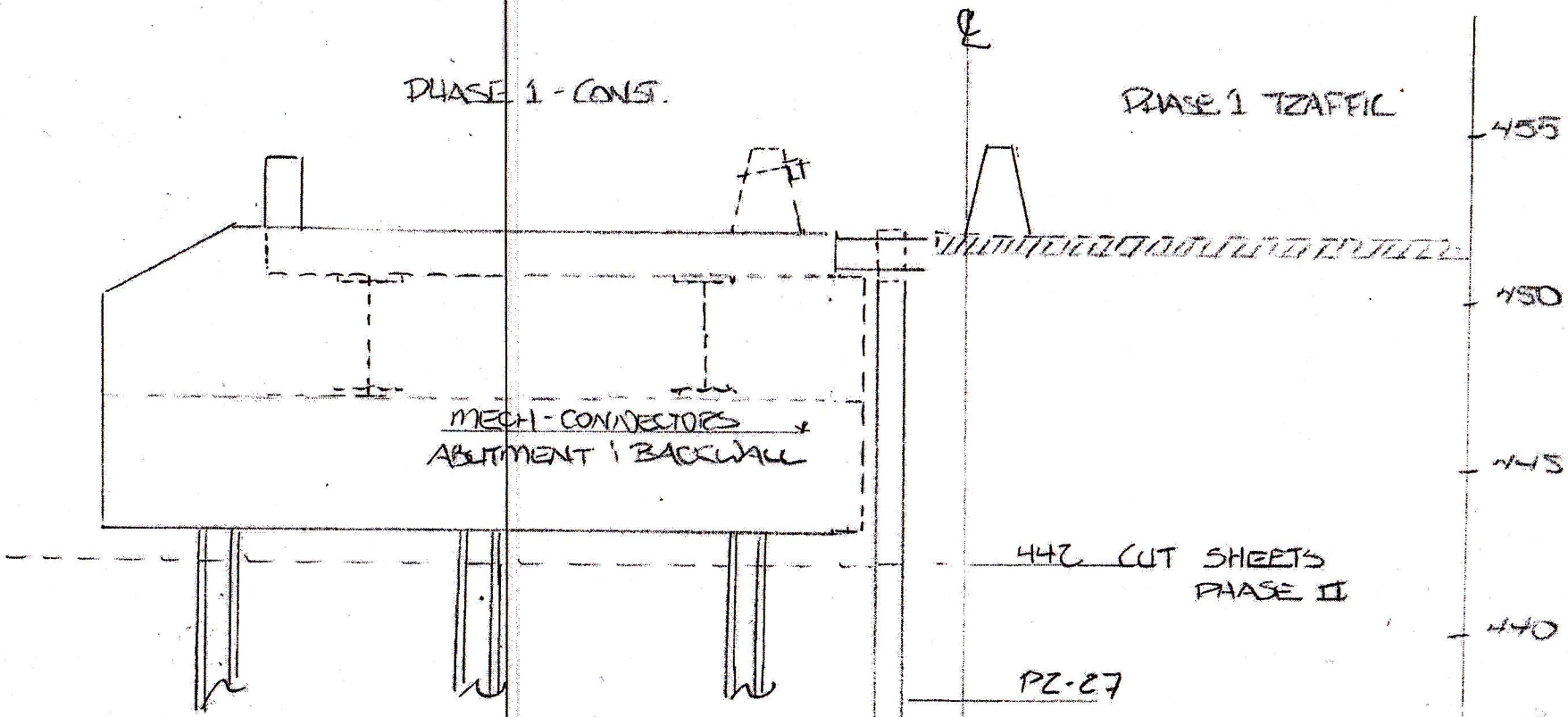

SECT. B-B

PHASE 1

1" = 5'-0"

ROCKINGHAM

ABUTMENT #1

STATE OF VERMONT
PHILIP J. SAVOY
No. 5671
REGISTERED
PROFESSIONAL ENGINEER