Nov. 2014

CALDERWOOD ENGINEERING
222 RIVER ROAD
RICHMOND, ME 04357
PH. (207) 737-2007 FAX (207) 737-2008

Phase I - Demo. & Bracing

STATE OF VERMONT
ERIC T. CALDERWOOD
NO. 8700
Structural
LICENSED
PROFESSIONAL ENGINEER

CALDERWOOD ENGINEERING, ETC.

STRUCTURAL ENGINEERING • DETAILING SERVICES

222 RIVER RD, RICHMOND, ME 04357 PH/FX (207)737-2007/(207) 737-2008

PREPARED FOR:

COLD RIVER BRIDGES, LLC

106-BR-14
ROCKINGHAM, VT BRF 0126(12)

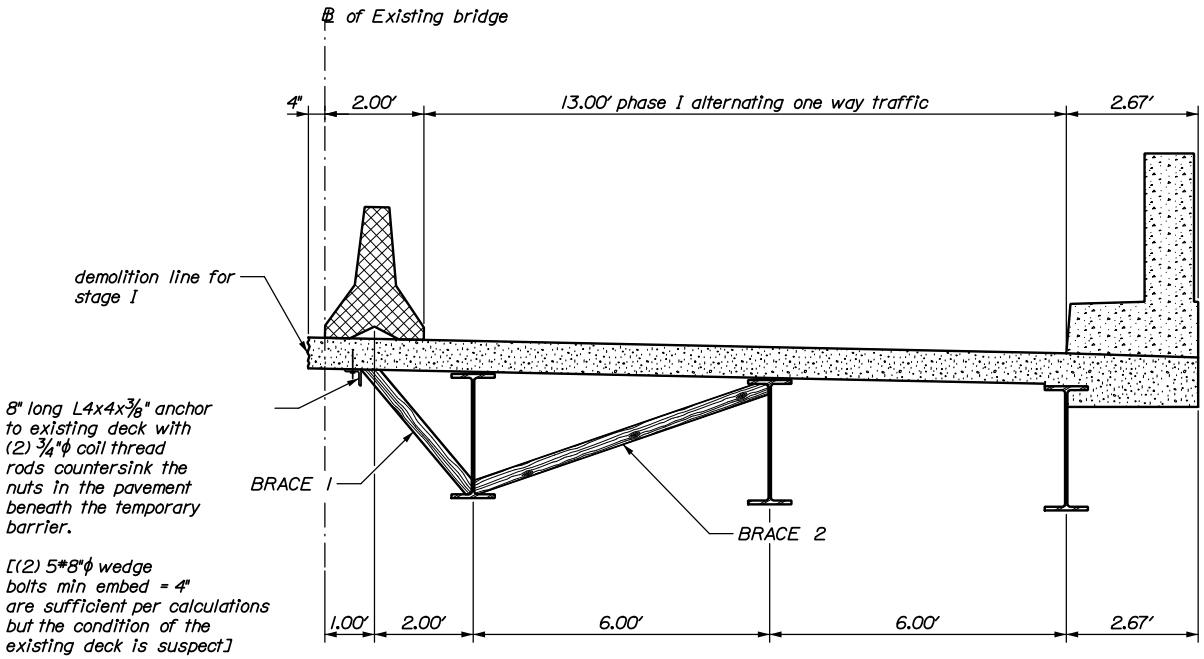

EXISTING SECTION WITH TEMP BARRIER SHOWN

Brace 1 = 4x4 nominal or actual size SPF South #2 or Better space at every existing diaphragm location & approximately midway between existing diaphragms (approx 10' spacing)

Brace 2 = 4x4 actual size or larger SPF South #2 or better - align Brace 2 with each brace 1, except brace 2 may be omitted at diaphragm locations

General Notes

1. All Timber shall be Spruce-Pine-Fir South #2 or better UNO.

2. Report any discrepancy between these plans and actual observed field conditions to the demolition plan engineer of record immediately.

3. Do not proceed with any dependent work until any such reported discrepancy is addressed to the satisfaction of the demolition plan engineer of record.

CALDERWOOD ENGINEERING
222 RIVER ROAD
RICHMOND, ME 04357
PH. (207) 737-2007 FAX (207) 737-2008

Calculations performed for temporary bracing of barrier on existing deck for Rockingham Vermont. Calculations performed for Cold River Bridges, llc of Walpole NH

Applicable Code = AASHTO LRFD Bridge Design Specifications (2012 edition)

Inputs & Givens:

Railing Test Level: data from table A13.2-1

$TL := 3$

$F_t := 54\ kip$ $\qquad L_t := 4.0\ ft$

$F_v := 4.5\ kip$ $\qquad L_v := 4.5\ ft$

$H_e := 24.0\ in$

Overhang Width from centerline of girder to center of barrier =

$OH := 2\ ft$

$b_f := 10.4\ in$ $\qquad t_f := 0.61\ in$

S is spacing of existing diaphragms, (maximum spacing) $\qquad S := 19.5\ ft$

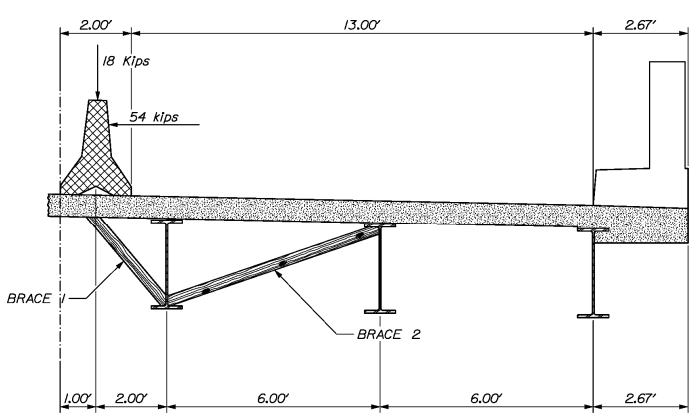

EXISTING SECTION WITH TEMP BARRIER SHOWN

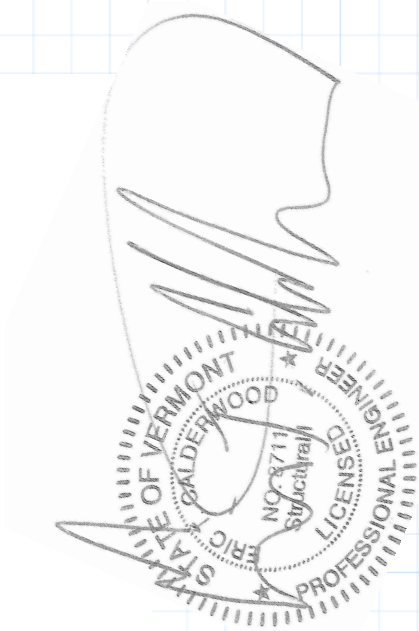

CALDERWOOD ENGINEERING
222 RIVER ROAD
RICHMOND, ME 04357
PH. (207) 737-2007 FAX (207) 737-2008

weight of Barrier section (20' barrier) W=	$W := 7.8\ kip$
Overturning moment in Barrier section Mot	$M_{ot} := F_t \cdot H_e = 1296\ in \cdot kip$
Restraining moment due to W	$M_{rw} := W \cdot 12\ in = 93.6\ in \cdot kip$
Restraining moment due to Fv	$M_{rfv} := F_v \cdot 12\ in = 54\ in \cdot kip$
Concrete Strength - assumed	$f'c := 3000\ psi = 3\ ksi$
deck thickness t_d	$t_d := 7.5\ in$
Resisting width of deck (say brw=Lt+2xHe+2xt_d)	$b_{rw} := L_t + 2 \cdot H_e + 2 \cdot t_d = 111\ in$
skew angle in degrees of reinforcement from considered moment	$Skew := 30\ °$
Effective Area of Steel in Deck due to S1 & S2 bars Top Mat perp to girder lines	$A_{st} := 0.31\ in^2 \cdot \frac{b_{rw}}{5.5\ in} \cdot \cos(Skew)$ $A_{st} = 5.418\ in^2$
yield strength of reinforcing steel (intermediate grade circa 1953	$f_y := 40\ ksi$
AASHTO LRFD Bridge Design Specifications 5.7.2.2	$\beta_1 := 0.85$
Rectangular behavior with fs = fy (assuming tension controlled failure)	$f_s := f_y = 40\ ksi$

CALDERWOOD ENGINEERING
222 RIVER ROAD
RICHMOND, ME 04357
PH. (207) 737-2007 FAX (207) 737-2008

NA at Ultimate failure c, per AASHTO LRFD 5.7.3.1.2-4 assuming Rectangular behavior and tension controlled failure

$$c := \frac{A_{st} \cdot f_s}{(0.85 \cdot f'c \cdot \beta_1 \cdot b_{rw})} = 0.901\ in$$

by definition of a AASHTO LRFD 5.7.3.2.2

$$a := \beta_1 \cdot c = 0.766\ in$$

clear cover to top bars

$$c_t := 1.125\ in$$

diameter of Reinforcing bars

$$d_b := \frac{5}{8}\ in$$

d_s = depth to centroid of tension steel from the compressive face by definition

$$d_s := t_d - c_t - \frac{d_b}{2} = 6.063\ in$$

Nominal Moment Capacity of deck at ultimate flexural capacity AASHTO LRFD 5.7.3.2.2-1

$$M_n := A_{st} \cdot f_s \cdot \left(d_s - \frac{a}{2}\right) = 1230.934\ in \cdot kip$$

Resistance Factor for Extreme event limit state

$$\phi_{EE} := 1.0$$

$$M_r := M_n \cdot \phi_{EE} = 1230.934\ in \cdot kip$$

Additional load on deck due to weight of barrier & Self Weight of deck (per Barrier)

$$M_{dead} := W \cdot OH + 150\ pcf \cdot (7.5\ in) \cdot \frac{(OH + 16\ in)^2}{2} \cdot 20\ ft$$

$$M_{dead} = 312.2\ in \cdot kip$$

$$M_{total} := M_{dead} + M_{ot} + M_{rfv} = 1662.2\ in \cdot kip$$

Moment to be resisted by Brace 1 per barrier

$$M_{b1} := M_{total} - M_r = 431.266\ in \cdot kip$$

CALDERWOOD ENGINEERING
222 RIVER ROAD
RICHMOND, ME 04357
PH. (207) 737-2007 FAX (207) 737-2008

Vertical load to be resisted at Brace 1 per barrier

$$V_{b120f} := \frac{M_{b1}}{OH} = 17.969\ kip$$

Number of Braces per Barrier

$$N_b := 2$$

Vertical load per brace

$$V_{b1} := \frac{V_{b120f}}{N_b} = 8.985\ kip$$

Angle of Brace from vertical

$$\alpha := 40\ °$$

Axial Compression per brace

$$P_{b1} := \frac{V_{b1}}{\cos(\alpha)} = 11.729\ kip$$

Unbraced Length

$$l_{b1} := 3.25\ ft = 39\ in$$

$$A_{b1} := 12.25\ in^2$$

$$f_{cII} := \frac{P_{b1}}{A_{b1}} = 957.445\ psi$$

Using SPF #2 (south) or better although we typically use the NDS for Wood Construction these values are taken from AASHTO LRFD Chapter 8 for consistancy

$$F_{co} := 1.000\ ksi$$

$$E_o := 1100\ ksi$$

$$C_{kf} := \frac{2.5}{\phi_{EE}} = 2.5$$

$$C_{mFpo} := 0.73$$

$$C_{FFpo} := 1.15$$

$$C_\lambda := 1.0$$

$$F_c := F_{co} \cdot C_{kf} \cdot C_{mFpo} \cdot C_{FFpo} \cdot C_\lambda = 2.099\ ksi$$

CALDERWOOD ENGINEERING
222 RIVER ROAD
RICHMOND, ME 04357
PH. (207) 737-2007 FAX (207) 737-2008

Adjust for Unbraced length

$K_{cE} := 0.52$

$$F_{cE} := \frac{\left(K_{cE} \cdot E_o \cdot (3.5\ in)^2\right)}{l_{b1}^{\ 2}} = 4.607\ ksi$$

$$B_{b1} := \frac{F_{cE}}{F_c} = 2.195$$

$c := 0.8$

$$C_p := \frac{(1 + B_{b1})}{2 \cdot c} - \sqrt{\left(\left(\frac{(1 + B_{b1})}{2 \cdot c}\right)^2 - \frac{B_{b1}}{c}\right)} = 0.882$$

$$P_n := F_c \cdot C_p \cdot A_{b1} = 22.667\ kip$$

$$P_r := \phi_{EE} \cdot P_n = 22.667\ kip$$

Capacity is greater than load therefor okay

$$P_{b1} = 11.729\ kip$$

Horizontal Component

$$V_{hz} := \frac{V_{b1}}{\sin(\alpha)} = 13.978\ kip$$

Horizontal component resisted by brace B2 or by diaphragm at the bottom flange and by bolted angle at the bottom of the deck

$\alpha_2 := 70\ °$

$$P_{b2} := \frac{V_{hz}}{\sin(\alpha_2)} = 14.875\ kip$$

Use Actual Dimension Lumber for Brace B2

$l_{b2} := 76\ in$

$A_{b2} := 16\ in^2$

$$f_{cII} := \frac{P_{b1}}{A_{b2}} = 733.044\ psi$$

CALDERWOOD ENGINEERING
222 RIVER ROAD
RICHMOND, ME 04357
PH. (207) 737-2007 FAX (207) 737-2008

$F_{co} := 1.000\ ksi$

$E_o := 1100\ ksi$

$C_{kf} := \frac{2.5}{\phi_{EE}} = 2.5$

$C_{mFpo} := 0.73$

$C_{FFpo} := 1.15$

$C_\lambda := 1.0$

$F_c := F_{co} \cdot C_{kf} \cdot C_{mFpo} \cdot C_{FFpo} \cdot C_\lambda = 2.099\ ksi$

Adjust for Unbraced length

$K_{cE} := 0.52$

$F_{cE2} := \frac{\left(K_{cE} \cdot E_o \cdot (4.0\ in)^2\right)}{l_{b2}^{\ 2}} = 1.584\ ksi$

$B_{b2} := \frac{F_{cE2}}{F_c} = 0.755$

$c := 0.8$

$C_p := \frac{(1 + B_{b2})}{2 \cdot c} - \sqrt{\left(\left(\frac{(1 + B_{b2})}{2 \cdot c}\right)^2 - \frac{B_{b2}}{c}\right)} = 0.588$

$P_n := F_c \cdot C_p \cdot A_{b2} = 19.73\ kip$

$P_r := \phi_{EE} \cdot P_n = 19.73\ kip$

Capacity is greater than load therefor okay

$P_{b2} = 14.875\ kip$

CALDERWOOD ENGINEERING
222 RIVER ROAD
RICHMOND, ME 04357
PH. (207) 737-2007 FAX (207) 737-2008

Check Bolt in shear at edge of deck use 35 degree failure plane for side blowout of deck concrete per ACI 318 Appendix D

$A_{vc} := 7.5\ in \cdot (2) \cdot 1.5 \cdot (12\ in) = 270\ in^2$

$h_a := t_d = 7.5\ in$

embedment of Wedge bolts $h_{ef} := 4\ in$

$\psi_{edn} := 1$

$\psi_c := 1$

$c_{a1} := 12\ in$

$A_{Vco} := 4.5 \cdot c_{a1}^{\ 2} = 648\ in^2$

$\psi_{edV} := \psi_{edn} = 1$

$\psi_{cV} := 1.2$

$\psi_{hV} := \sqrt[2]{\frac{1.5 \cdot c_{a1}}{h_a}} = 1.549$

$d_a := 0.625\ in$

$l_e := 2 \cdot d_a = 1.25\ in$

$\lambda := 1.0$

$sqrtf'c := 54.772\ \frac{lbf}{in^2}$

$V_b := \left(7 \cdot \left(\frac{l_e}{d_a}\right)^{0.2} \cdot \sqrt{d_a}\right) \cdot \lambda \cdot sqrtf'c \cdot c_{a1}^{\ 1.5} = 14473.532\ lbf$

$V_{cb} := \frac{A_{vc}}{A_{Vco}} \cdot \psi_{edV} \cdot \psi_{cV} \cdot \psi_{hV} \cdot V_b = 11211.149\ lbf$

Use (2) 5/8" wedge bolts