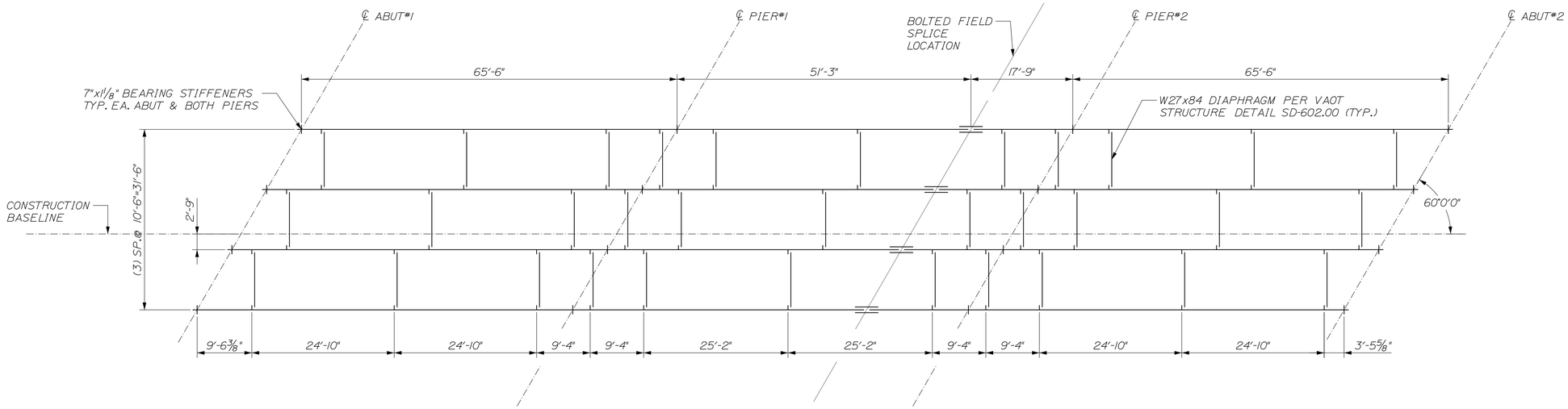

ROCKINGHAM FRAMING PLAN
3/32" = 1'-0"

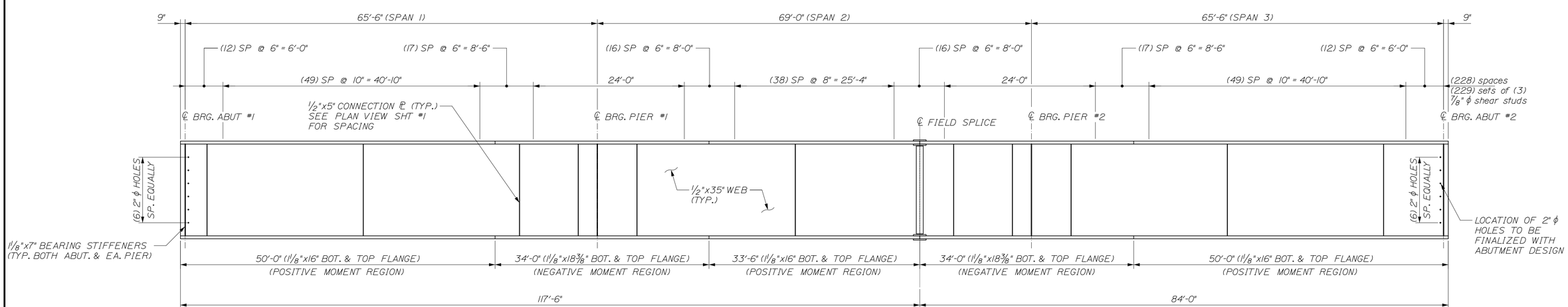

GIRDER ELEVATION
5V:1H

PRELIMINARY NOT FOR CONSTRUCTION

CALDERWOOD ENGINEERING, ETC.
STRUCTURAL ENGINEERING • DETAILING SERVICES
222 RIVER RD, RICHMOND, ME 04357 PH/FX (207)737-2007/(207) 737-2008

PREPARED FOR:
COLD RIVER BRIDGES, LLC

CEE 106-BR-14

P.E. NUMBER

DATE:

	BY	DATE
	ETC	2014
DESIGN-DETAILED		
CHECKED-REVIEWED		
REVISIONS 1		
REVISIONS 2		
REVISIONS 3		
REVISIONS 4		
FIELD CHANGES		

PRELIM VE SUPER. DESIGN
ROCKINGHAM VT. BRF 0126 (12)

PRELIMINARY SUPERSTRUCTURE DETAILS

SHEET NUMBER

1

CALDERWOOD ENGINEERING
222 RIVER ROAD
RICHMOND, ME 04357
PH. (207) 737-2007 FAX (207) 737-2008

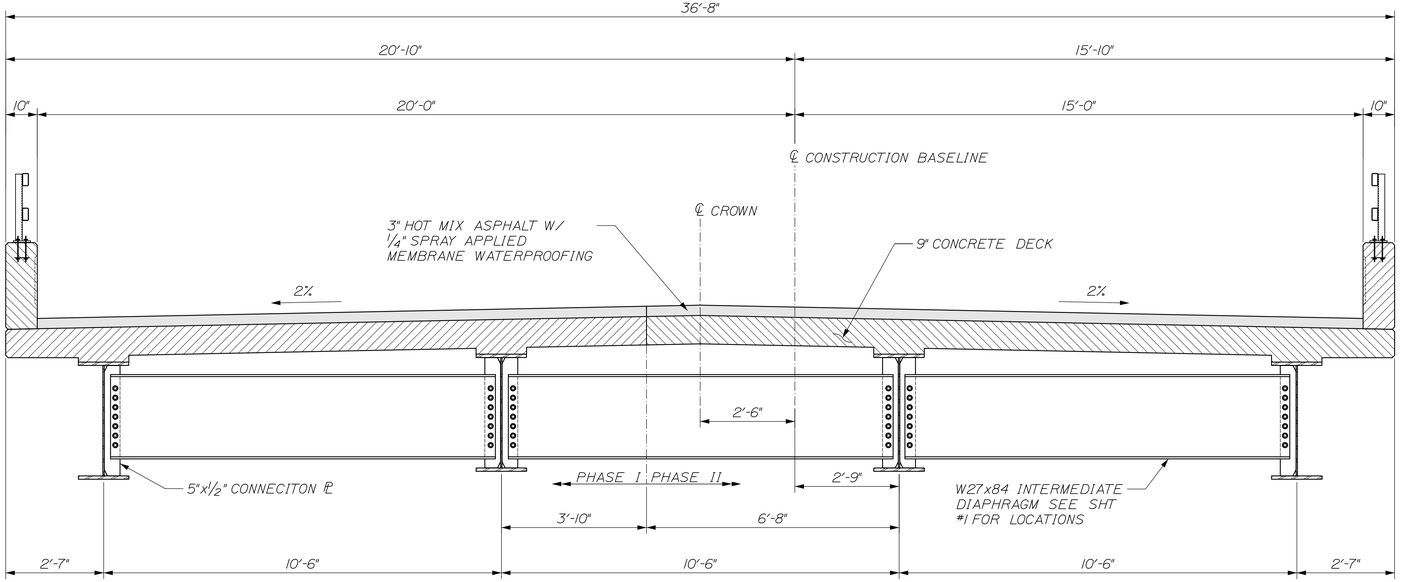

TYPICAL SECTION
1/2" = 1'-0"

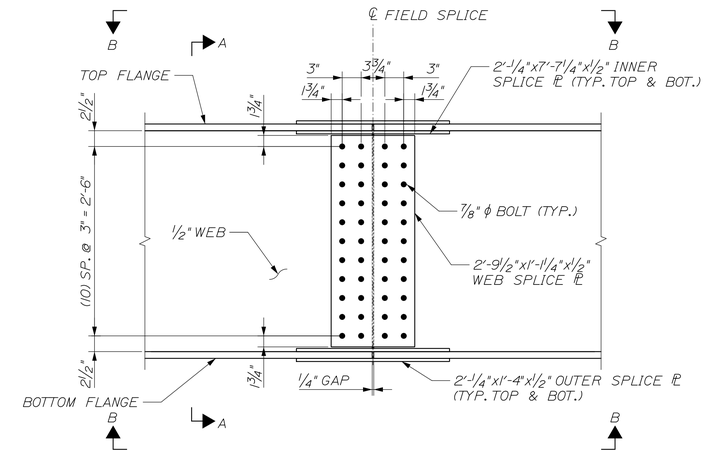

BOLTED FIELD SPLICE ELEVATION
1" = 1'-0"

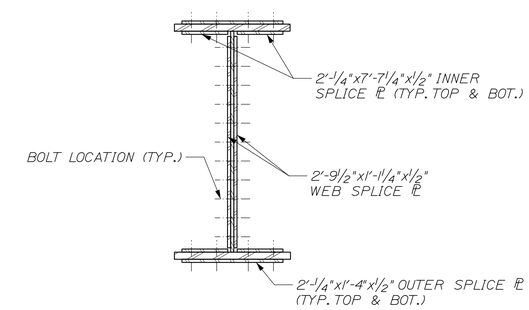

SECTION A-A
1" = 1'-0"

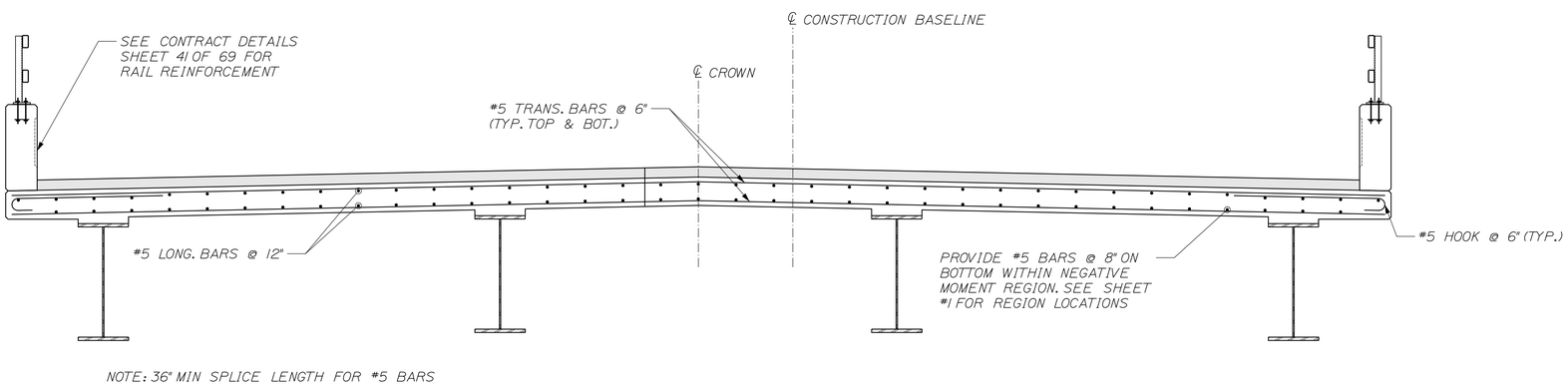

NOTE: 36" MIN SPLICE LENGTH FOR #5 BARS

TYPICAL REINFORCEMENT SECTION
1/2" = 1'-0"

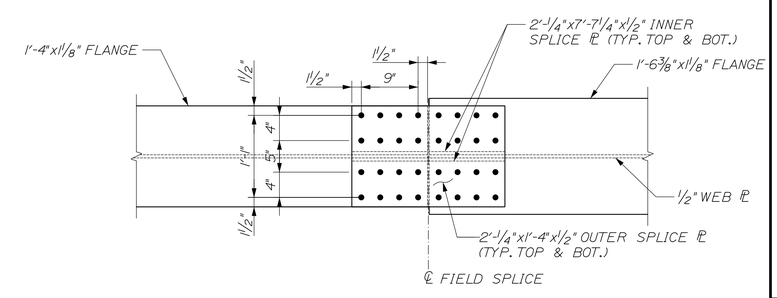

SECTION B-B
1" = 1'-0"

PRELIMINARY NOT FOR CONSTRUCTION

CALDERWOOD ENGINEERING, ETC.
STRUCTURAL ENGINEERING • DETAILING SERVICES
222 RIVER RD, RICHMOND, ME 04357 PH/FX (207) 737-2007/(207) 737-2008

PREPARED FOR:
COLD RIVER BRIDGES, LLC

CEE 106-BR-14

P.E. NUMBER

DATE:

	BY	DATE
DESIGN-DETAILED	ETC	2014
CHECKED-REVIEWED		
REVISIONS 1		
REVISIONS 2		
REVISIONS 3		
REVISIONS 4		
FIELD CHANGES		

PRELIM VE SUPER. DESIGN
ROCKINGHAM VT. BRF 0126 (12)

PRELIMINARY SUPERSTRUCTURE DETAILS

SHEET NUMBER
2

CALDERWOOD ENGINEERING
222 RIVER ROAD
N. RICHMOND, ME 04357
PH. (207) 737-2007 FAX (207) 737-2008