Final Design Calculations for
Bearings, Bottom of Slab Elevations, deflections & Camber
VE Alternate

In the Town of

Rockingham, Vt.

BRF-0126(12)

Prepared for:

Cold River Bridges

By:

Calderwood Engineering etc

January, 2015

STATE OF VERMONT
ERIC T. CALDERWOOD
NO. 8711
Structural
LICENSED
PROFESSIONAL ENGINEER

Cover photo of Cavendish
Courtesy of Cold River Bridges
BRF-0146(13)

Table of Contents – Bearings, Deflections, Camber, BOS Elevations

Table of Contents i
Project notes: 1

Reactions from Superstructure 2-6
Rotational Demand at Piers 7

Plain Elastomeric Pad Design 7-8
Sole plate design 9
Anchor Rod Design Str. III 10

Temp Bearing Leveling Plate at Abutments 11
Temp Bearing Rods at Abutments 12

Summary of Camber & Bottom of Slab elevations & Brg & Ped Elevations 13-14

Seismic load on Anchor rods at pier bearings 15

Risa Deflection results 16-28

CALDERWOOD ENGINEERING
222 RIVER ROAD
RICHMOND, ME 04357
PH. (207) 737-2007 FAX (207) 737-2008

Project: Rockingham VT Bridge
Contractor: Cold River Bridges

Value Engineering Design: Calderwood Engineering
Design Computations by: Eric T. Calderwood, PE
Design Check Computations by: Gregory MacAlister, EIT

Project Notes:

VTrans Structural Design Manual

Bearings Design - Deflections - Pedestal elevations - bottom of slab elevations

Use Procedure A for Elastomeric Bearing design

$\gamma_{cn} := 150\ \text{pcf}$
$\gamma_{pvt} := 145\ \text{pcf}$

$T_{min} := -20\ °F$ $\qquad$ $T_{max} := 105\ °F$

$T_{avg} := \frac{T_{max} + T_{min}}{2} = 42.5\ °F$

say deck placement may take place between temperatures of 20 degrees and 70 degrees

$Tc_{min} := 20\ °F$ $\qquad$ $Tc_{max} := 70\ °F$ $\qquad$ $\varepsilon_{stl} := 0.0000065\ \frac{in}{in \cdot \Delta °F}$

$T_{rangemax} := \max\left(\left\langle Tc_{max} - T_{min}\right\rangle, \left\langle T_{max} - Tc_{min}\right\rangle\right) = 90\ \Delta °F$

$G_{min} := 0.130\ \text{ksi}$ *minimum shear modulus for shore A durometer Hardeness 60 neoprene pad*

$G_{max} := 0.200\ \text{ksi}$ *maximum shear modulus for shore A durometer Hardeness 60 neoprene pad*

Use Shore A durometer hardness 60 neoprene pads

CALDERWOOD ENGINEERING
222 RIVER ROAD
RICHMOND, ME 04357
PH. (207) 737-2007 FAX (207) 737-2008

Reactions: from superstructure - Reference steel design computations, uniform load of 1 klf and associated reactions at and pier & abutment

Uniform load (spans 1,2 & 3 Loaded)

Distance	Vmax	Mmin	Mmax		No	Rmin	Rmax
0.00	25.9	0.0	0.0		1	0.0	25.9
6.55	19.3	0.0	148.0		2	0.0	74.1
13.10	12.8	0.0	253.1		3	0.0	74.1
19.65	6.2	0.0	315.2		4	0.0	25.9
26.20	0.3	0.0	334.5				
32.75	6.9	0.0	310.9				
39.30	13.4	0.0	244.3				
45.85	20.0	0.0	134.9				
52.40	26.5	-17.4	0.0				
58.95	33.1	-212.7	0.0				
65.50	39.6	-450.8	0.0				
72.40	27.6	-236.6	0.0				
79.30	20.7	-69.9	0.0				
86.20	13.8	0.0	49.1				
93.10	6.9	0.0	120.5				
100.00	0.0	0.0	144.3				
106.90	6.9	0.0	120.5				
113.80	13.8	0.0	49.1				
120.70	20.7	-69.9	0.0				
127.60	27.6	-236.6	0.0				
134.50	39.6	-450.8	0.0				
141.05	33.1	-212.7	0.0				
147.60	26.5	-17.4	0.0				
154.15	20.0	0.0	134.9				
160.70	13.4	0.0	244.3				
167.25	6.9	0.0	310.9				
173.80	0.3	0.0	334.5				
180.35	6.2	0.0	315.2				
186.90	12.8	0.0	253.1				
193.45	19.3	0.0	148.0				
200.00	25.9	0.0	0.0				

$$R_{a1klf} = 25.8671 \frac{kip}{klf}$$

$$R_{p1klf} = 74.1329 \frac{kip}{klf}$$

CALDERWOOD ENGINEERING
222 RIVER ROAD
RICHMOND, ME 04357
PH. (207) 737-2007 FAX (207) 737-2008

Dead Load Computations:

$S := 10.5\ ft \qquad OH := 2\ ft + 7\ in = 2.5833\ ft \qquad t_{deck} := 9\ in \qquad N_b := 4$

$W_{stl} := 199.68\ plf = 0.1997\ klf$

$W_{stl} = 0.1997\ klf$

$W_{extdeck} := \left(\frac{S}{2} + OH\right) \cdot t_{deck} \cdot \gamma_{cn} = 881.25\ plf$

$W_{extdeck} = 0.8813\ klf$

$W_{intdeck} := S \cdot t_{deck} \cdot \gamma_{cn} = 1181.25\ plf$

$W_{intdeck} = 1.1813\ klf$

$W_{extpvt} := \left(\frac{S}{2} + OH - 10\ in\right) \cdot 3.25\ in \cdot \gamma_{pvt} = 274.8958\ plf$

$W_{extpvt} = 0.2749\ klf$

$W_{intpvt} := S \cdot 3.25\ in \cdot \gamma_{pvt} = 412.3438\ plf$

$W_{intpvt} = 0.4123\ klf$

60% of railing load applied to exterior girders, steel railing taken at 25plf on top of concrete railing

$W_{extrail} := 60\% \cdot (10\ in \cdot (2\ ft + 3.25\ in) \cdot \gamma_{cn} + 25\ plf) = 185.3125\ plf$

$W_{extrail} = 0.1853\ klf$

$W_{intrail} := 40\% \cdot 2 \cdot \frac{(10\ in \cdot (2\ ft + 3.25\ in) \cdot \gamma_{cn} + 25\ plf)}{(N_b - 2)} = 123.5417\ plf$

$W_{intrail} = 0.1235\ klf$

CALDERWOOD ENGINEERING
222 RIVER ROAD
RICHMOND, ME 04357
PH. (207) 737-2007 FAX (207) 737-2008

$R_{pexDCS} := R_{p1klf} \cdot \langle W_{stl} + W_{extdeck} + W_{extrail} \rangle = 93.8702$ kip *Pier Reaction due to DC from Superstructure Exterior*

$R_{pinDCS} := R_{p1klf} \cdot \langle W_{stl} + W_{intdeck} + W_{intrail} \rangle = 111.5308$ kip *Pier Reaction due to DC from Superstructure Interior*

$R_{pexDWS} := R_{p1klf} \cdot W_{extpvt} = 20.3788$ kip *Pier Reaction due to DW from Superstructure Exterior*

$R_{pinDWS} := R_{p1klf} \cdot W_{intpvt} = 30.5682$ kip *Pier Reaction due to DW from Superstructure Interior*

$R_{aexDCS} := R_{a1klf} \cdot \langle 1.5 \cdot W_{stl} + 1.5 \cdot W_{extdeck} \rangle = 41.9408$ kip *Total Str IV Reaction at abut due to fluid load and self weight Exterior*

$R_{ainDCS} := R_{a1klf} \cdot \langle 1.5 \cdot W_{stl} + 1.5 \cdot W_{intdeck} \rangle = 53.581$ kip *Total Str IV Reaction at abut due to fluid load and self weight Interior*

CALDERWOOD ENGINEERING
222 RIVER ROAD
RICHMOND, ME 04357
PH. (207) 737-2007 FAX (207) 737-2008

$R_{LanePier} := 0.64\ klf \cdot R_{p1klf} = 47.445\ kip$ *Pier Reaction due to Lane Load Unfactored Undistributed*

HS20 Truck

Distance	Vmax	Mmin	Mmax	No	Rmin	Rmax
0.00	52.9	0.0	0.0	1	-5.6	52.9
6.55	44.4	-37.0	290.7	2	-9.5	69.8
13.10	36.2	-74.0	523.8	3	-9.4	69.8
19.65	28.4	-111.0	653.2	4	-5.6	54.4
26.20	21.3	-148.0	687.4			
32.75	27.8	-185.0	679.1			
39.30	35.6	-222.0	611.8			
45.85	42.7	-259.0	469.8			
52.40	49.2	-296.0	270.2			
58.95	55.1	-333.0	99.5			
65.50	60.1	-424.8	110.5			
72.40	49.7	-371.4	81.9			
79.30	41.8	-318.0	314.8			
86.20	33.7	-264.7	482.6			
93.10	25.6	-211.3	572.6			
100.00	22.2	-160.2	611.5			
106.90	30.3	-214.4	589.1			
113.80	38.4	-268.5	485.8			
120.70	46.1	-322.7	309.7			
127.60	52.8	-376.8	71.0			
134.50	61.3	-431.0	109.0			
141.05	55.4	-328.0	98.1			
147.60	48.7	-291.6	270.6			
154.15	41.4	-255.1	468.4			
160.70	33.5	-218.7	604.4			
167.25	25.1	-182.2	665.7			
173.80	22.6	-145.8	698.2			
180.35	30.5	-109.3	652.5			
186.90	38.9	-72.9	509.1			
193.45	46.5	-36.4	304.6			
200.00	54.4	0.0	0.0			

$R_{phs20} = 69.831\ kip$

CALDERWOOD ENGINEERING
222 RIVER ROAD
RICHMOND, ME 04357
PH. (207) 737-2007 FAX (207) 737-2008

Neg Moment Truck Train

Distance	Vmax	Mmin	Mmax		No	Rmin	Rmax	
0.00	47.6	0.0	0.0		1	-3.7	47.6	
6.55	39.9	-24.3	261.6		2	-8.6	70.1	
13.10	32.6	-48.6	471.4		3	-8.5	70.0	
19.65	25.6	-73.0	587.9		4	-3.7	49.6	
26.20	19.1	-97.3	618.6					
32.75	26.3	-121.6	611.2					
39.30	33.1	-145.9	550.7					
45.85	39.1	-170.3	422.8					
52.40	44.3	-251.0	243.2					
58.95	49.6	-414.9	89.7					
65.50	54.3	-634.1	99.7					
72.40	47.6	-427.3	97.2					
79.30	42.2	-286.2	261.8					
86.20	36.2	-238.2	371.9					
93.10	29.8	-190.2	429.3					
100.00	23.1	-144.5	457.3					
106.90	27.9	-193.3	450.2					
113.80	33.6	-242.1	392.3					
120.70	39.2	-290.9	280.7					
127.60	44.1	-429.0	110.8					
134.50	56.1	-636.9	98.1					
141.05	51.7	-417.7	88.3					
147.60	46.7	-253.3	249.4					
154.15	41.0	-167.7	426.6					
160.70	34.7	-143.8	547.2					
167.25	27.6	-119.8	607.2		Vsp=		38.8	kips
173.80	21.0	-95.8	640.6		Mminsp=		-263.0	k-ft
180.35	28.2	-71.9	596.1		Mmaxsp=		344.6	k-ft
186.90	35.6	-47.9	466.3		Mmax=		640.6	k-ft
193.45	42.5	-24.0	278.4		Mmin=		-636.9	k-ft
200.00	49.6	0.0	0.0		Vmax=		56.1	kips

$$R_{pnmtt} = 70.0848 \text{ kip}$$

CALDERWOOD ENGINEERING
222 RIVER ROAD
RICHMOND, ME 04357
PH. (207) 737-2007 FAX (207) 737-2008

Rotational demand at pier bearings: *From RISA model*

$R_{maxint} := 0.0007891$ rad

$R_{minint} := -0.0007955$ rad

$R_{maxext} := 0.0008282$ rad

$R_{minext} := -0.0008287$ rad

$P_{rintsvcI} := 1.09 \cdot \left(1.33 \cdot \max\left(R_{pnmtt}, R_{phs20}\right) + R_{LanePier}\right) + R_{pinDCS} + R_{pinDWS} = 295.4161$ kip

$P_{rextsvcI} := 1.09 \cdot \left(1.33 \cdot \max\left(R_{pnmtt}, R_{phs20}\right) + R_{LanePier}\right) + R_{pexDCS} + R_{pexDWS} = 267.5661$ kip

$$\Delta_{pierbrg} := \frac{69\ \text{ft} \cdot \varepsilon_{stl} \cdot T_{rangemax}}{2} = 0.2422\ \text{in}$$

$C_{rot} := 0.0005$ rad *To account for tolerances in fabrication and construction*

$R_{max} := C_{rot} + \max\left(\left|R_{minext}\right|, \left|R_{maxext}\right|, \left|R_{minint}\right|, \left|R_{maxint}\right|\right) = 0.0013287$ rad *Max Anticipated rotation*

$L := 18$ in $W := 22$ in $h_{ri} := 0.625$ in *min thickness > 2x Max expansion per AASHTO 14.7.6.3.4*

$$S_{brg} := \frac{L \cdot W}{2 \cdot h_{ri} \cdot (L + W)} = 7.92$$

$$\sigma_{smax} := \frac{\max\left(P_{rintsvcI}, P_{rextsvcI}\right)}{L \cdot W} = 0.746\ \text{ksi}$$

$$\sigma_{smin} := \frac{min\left(P_{rintsvcI}, P_{rextsvcI}\right)}{L \cdot W} = 0.6757\ \text{ksi}$$

CALDERWOOD ENGINEERING
222 RIVER ROAD
RICHMOND, ME 04357
PH. (207) 737-2007 FAX (207) 737-2008

Check Maximum Compression:

$$\sigma_{all} := min\left(1.00 \cdot G_{min} \cdot S_{brg}, 0.80\ ksi\right)$$

AASHTO 14.7.6.3.2

$$\sigma_{all} = 0.8\ ksi$$

Check Compressive Deflection: 14.7.6.3.3

$$\varepsilon_s := 3.5\%$$

$$\varepsilon_s \cdot h_{ri} = 0.0219\ in$$

Anticipated actual average compressive deflection of bearing pads (PEP)

$$0.09\ h_{ri} = 0.0563\ in$$

AASHTO 14.7.6.3.3 maximum allowable average compressive deflection

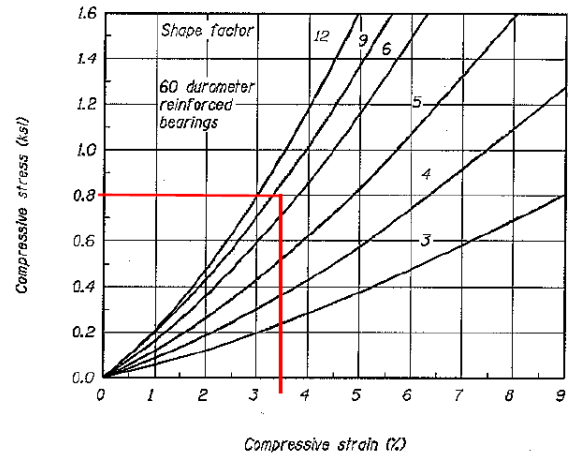

From AASHTO Figure C14.7.6.3.3-1

Check Rotation: 14.7.6.3.5

Provisions for "lift off" have been eliminated from the specifications, and therefor will not be checked, also as noted in the commentary of C14.7.6.1 "Design for rotation in Method A is implicit in the geometric and stress limits given."

$$R_{comp} := \frac{L \cdot \tan\left(R_{max}\right)}{2 \cdot h_{ri}} = 1.9133\%$$

$$\varepsilon_{tot} := \varepsilon_s + R_{comp} = 0.0541$$

still << 0.09 therefor okay

Check Stability: 14.7.6.3.6

$$h_{max} := min\left(\frac{L}{3}, \frac{W}{3}\right) = 6\ in$$

6in >> 0.625in therefor okay

$$h_{ri} = 0.625\ in$$

CALDERWOOD ENGINEERING
222 RIVER ROAD
RICHMOND, ME 04357
PH. (207) 737-2007 FAX (207) 737-2008

Use Machined sole plates milled to the finished profile grade. Sole Plate must be designed to distribute bearing stress to pad which is wider than the flanges. Maximum stress allowed at strength I in the sole plate will be the plastic moment of the plate as it is weak axis and clearly compact.

$\sigma_{smax} = 0.746$ ksi

This is at service stress levels, check at strength levels

$F_y := 50$ ksi

$\varphi_f := 1.0$

AASHTO 6.5.4.2

$$P_{rintstrI} := 1.75 \cdot 1.09 \cdot \left(1.33 \cdot \max\left(R_{pnmtt}, R_{phs20}\right) + R_{LanePier}\right) + 1.25 \cdot R_{pinDCS} + 1.50 \cdot R_{pinDWS} = 453.5707 \text{ kip}$$

$$P_{rextstrI} := 1.75 \cdot 1.09 \cdot \left(1.33 \cdot \max\left(R_{pnmtt}, R_{phs20}\right) + R_{LanePier}\right) + 1.25 \cdot R_{pexDCS} + 1.50 \cdot R_{pexDWS} = 416.2109 \text{ kip}$$

$$\sigma_{strmax} := \frac{\max\left(P_{rintstrI}, P_{rextstrI}\right)}{L \cdot W} = 1.1454 \text{ ksi}$$

$b_f := 18.375$ in

$$C_{max} := \frac{W - b_f}{2} = 1.8125 \text{ in}$$

$$M_{solepl} := \sigma_{strmax} \cdot L \cdot \frac{C_{max}^{\ 2}}{2} = 33.8648 \text{ in}\cdot\text{kip}$$

$$Z_{req'd} := \frac{M_{solepl}}{\varphi_f \cdot F_y} = 0.6773 \text{ in}^3$$

$$t_{min} := \sqrt{\frac{Z_{req'd} \cdot 4}{L}} = 0.388 \text{ in}$$

Use a maximum thickness sole plate = 1.125" slope by 1% to match finished grade (use additional material from drops from flange plates for sole plate fabrication) Include 1/8" recess in sole plate - even with recess and 1% taper of plates, minimum thickness >> 0.388 in therefor sole plate is okay.

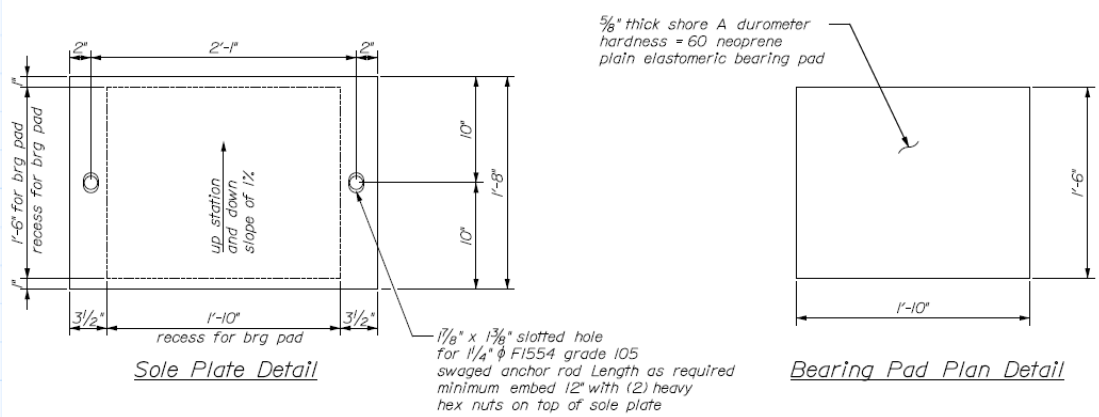

Sole Plate Detail

Bearing Pad Plan Detail

Pier Bearings

CALDERWOOD ENGINEERING
222 RIVER ROAD
RICHMOND, ME 04357
PH. (207) 737-2007 FAX (207) 737-2008

Size anchor bolts for wind load: wind is taken at strength III limit state

$$Wnd := 1.4 \cdot \frac{\frac{69\ ft + 65.5\ ft}{2} \cdot (1.125\ in \cdot 2 + 35\ in + 2\ in + 9\ in + 3.25\ in + 24\ in + 4\ in + 2\ in) \cdot 50\ psf}{4 \cdot 2}$$

$Wnd = 3.9965\ kip$ *per anchor bolt*

Use ASTM F1554 grade 105 anchor rods $F_{yAR} := 105\ ksi$ $F_{uAR} := 125\ ksi$

$t_{max} := 1.125\ in$

$$M_{uar} := \left(\frac{t_{max}}{2} + h_{ri}\right) \cdot Wnd = 4.7458\ in \cdot kip$$

$$Z_{areq'd} := \frac{M_{uar}}{\varphi_f \cdot F_{yAR}} = 0.0452\ in^3$$

$d_{req'd} := \sqrt[3]{Z_{areq'd} \cdot 6} = 0.6473\ in$ *Use 1.25 in diameter anchor bolts*

$d_{prov} := 1.25\ in$

embed anchor bolts for a maximum bearing on the concrete per AASHTO 5.7.5 - distribute bearing pressure from zero ksi at the bottom of the embedment and maximum at the top of the embedment in a triangular distribution.

$f'_c := 4\ ksi$

$m := 1.0$ *it is conserfative to take m=1.0 even though pedestals are much bigger than the anchor rods* $\varphi_{brg} := 0.70$

$P_{max} := \varphi_{brg} \cdot 0.85 \cdot f'_c = 2.38\ ksi$

$$L_{req'd} := \frac{Wnd}{d_{prov} \cdot \frac{P_{max}}{2}} = 2.6867\ in$$

Provide 12" embedment minimum >> 3.35in side bearing on concrete is a non concern, vertical bearing on concrete under bearing is okay by inspection as it is governed by the PEP requirements

CALDERWOOD ENGINEERING
222 RIVER ROAD
RICHMOND, ME 04357
PH. (207) 737-2007 FAX (207) 737-2008

Check temporary bearings at abutments

$W_{tb} := 20\ in$ $\qquad$ $C_{maxtb} := \frac{W_{tb} - 16\ in}{2} = 2\ in$

$$M_{pl} := \frac{\max\langle R_{aexDCS}, R_{ainDCS}\rangle}{2} \cdot C_{maxtb} + \frac{\max\langle R_{aexDCS}, R_{ainDCS}\rangle}{2 \cdot 2} \cdot \frac{16\ in}{2} = 160.7431\ in \cdot kip$$

$Z_{pltbreq'd} := \frac{M_{pl}}{\varphi_f \cdot F_y} = 3.2149\ in^3$ $\qquad$ $P_{width} := 12\ in$

$t_{plreq'd} := \sqrt{\frac{Z_{pltbreq'd} \cdot 4}{P_{width}}} = 1.0352\ in$

while there is slightly more moment on the temporary bearing due to the width of the phase construction, none of the moment here is assumed to be carried through the girder flange, all is carried by the leveling plate which is clearly a very conservative approach, and we would expect that any construction live load during the deck placement, or the increased fluid load due to the wider phase construction would be more than accomodated by the additional section provided by the girder flange itself which is to be welded to the leveling plate

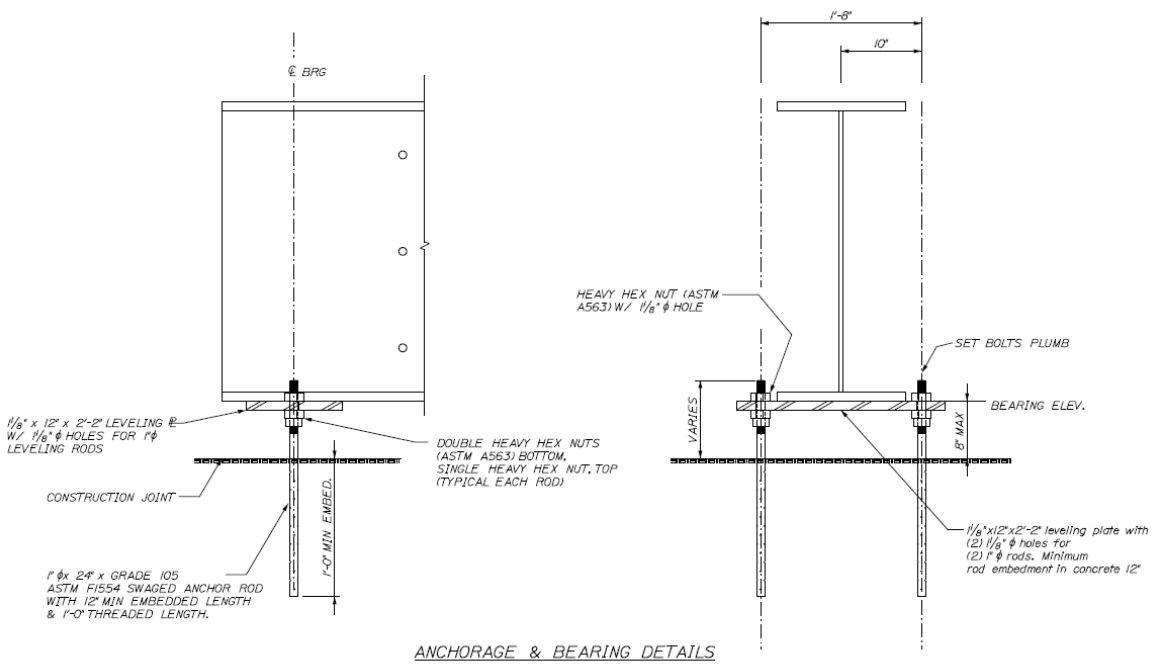

ANCHORAGE & BEARING DETAILS

CALDERWOOD ENGINEERING
222 RIVER ROAD
RICHMOND, ME 04357
PH. (207) 737-2007 FAX (207) 737-2008

$AR := 1\ in$ *Use 1 in diameter F1554 grade 105 anchor rods through leveling plate check capacity of anchor rods:*

$r := \frac{AR}{4} = 0.25\ in$

$L := 8\ in$ *Maximum Projection of Anchor rods from abutment construction joint*

$k := 1.2$ *Taken to be fixed in the concrete and fixed "free to translate but not rotate at the steel leveling plate*

$\frac{k \cdot L}{r} = 38.4$ $\varphi_c := 0.9$ $A_{ar} := \pi \cdot \left(\frac{AR}{2}\right)^2 = 0.7854\ in^2$

$P_e := \frac{\pi^2 \cdot 29000\ ksi}{\left(\frac{k \cdot L}{r}\right)^2} \cdot A_{ar} = 152.4492\ kip$ *AASHTO 6.9.4.1.2-1*

$P_o := A_{ar} \cdot F_{yAR} = 82.4668\ kip$ *AASHTO 6.9.4.1.1*

$\frac{P_e}{P_o} = 1.8486$ *AASHTO 6.9.4.1 Pe/Po >> 0.44 therefore*

$P_n := 0.658^{\left(\frac{P_o}{P_e}\right)} \cdot P_o = 65.7581\ kip$ *AASHTO 6.9.4.1.1-1*

$P_r := \varphi_c \cdot P_n = 59.1823\ kip$ *AASHTO 6.9.2.1-1*

$P_u := \frac{\max\left(R_{aexDCS}, R_{ainDCS}\right)}{2} = 26.7905\ kip$ *Maximum load anticipated on a single anchor rod during the deck placement < Pr therefore okay*

Use 1" diameter F1554 threadrods embedded a minimum of 12" in abutments for temporary bearings

CALDERWOOD ENGINEERING
222 RIVER ROAD
RICHMOND, ME 04357
PH. (207) 737-2007 FAX (207) 737-2008

SPAN 1

	Abut1	0.1	0.2	0.3	0.4	0.5	0.6	0.7	0.8	0.9	Pier1
Steel Dead Load	0.00	0.04	0.07	0.10	0.11	0.11	0.09	0.07	0.04	0.02	0.00
Fluid Exterior	0.00	0.18	0.33	0.44	0.49	0.49	0.43	0.32	0.20	0.08	0.00
SIDL Ext	0.00	0.04	0.07	0.09	0.10	0.10	0.09	0.07	0.05	0.02	0.00
Residual Camber	0.00	0.38	0.63	0.88	1.00	0.94	0.88	0.63	0.38	0.19	0.00
Total Camber Ext	0.00	0.63	1.09	1.50	1.70	1.63	1.48	1.09	0.67	0.31	0.00

	Abut1	0.1	0.2	0.3	0.4	0.5	0.6	0.7	0.8	0.9	Pier1
Steel Dead Load	0.00	0.04	0.07	0.10	0.11	0.11	0.09	0.07	0.04	0.02	0.00
Fluid Interior	0.00	0.24	0.44	0.59	0.66	0.65	0.57	0.44	0.27	0.11	0.00
SIDL Int	0.00	0.04	0.07	0.09	0.11	0.11	0.10	0.08	0.05	0.02	0.00
Residual Camber	0.00	0.38	0.63	0.88	1.00	0.94	0.88	0.63	0.38	0.19	0.00
Total Camber Int	0.00	0.69	1.21	1.65	1.87	1.80	1.64	1.21	0.74	0.34	0.00

Bottom Of Slab Elevations

	Abut1	0.1	0.2	0.3	0.4	0.5	0.6	0.7	0.8	0.9	Pier1
G1	450.27	450.22	450.17	450.11	450.05	449.99	449.92	449.84	449.76	449.68	449.61
G2	450.54	450.49	450.45	450.40	450.34	450.27	450.20	450.12	450.04	449.96	449.88
G3	450.70	450.65	450.61	450.56	450.50	450.43	450.36	450.28	450.20	450.12	450.04
G4	450.55	450.50	450.45	450.39	450.33	450.27	450.20	450.12	450.04	449.97	449.89

SPAN 2

	Pier1	0.1	0.2	0.3	0.4	0.5	0.6	0.7	0.8	0.9	Pier2
Steel Dead Load	0.00	0.00	0.00	0.01	0.02	0.02	0.02	0.01	0.00	0.00	0.00
Fluid Exterior	0.00	-0.02	0.01	0.05	0.08	0.09	0.08	0.05	0.01	-0.02	0.00
SIDL Ext	0.00	0.01	0.03	0.04	0.05	0.06	0.05	0.04	0.03	0.01	0.00
Residual Camber	0.00	0.00	0.13	0.50	0.88	1.00	0.88	0.50	0.13	0.00	0.00
Total Camber Ext	0.00	-0.02	0.16	0.60	1.03	1.17	1.03	0.60	0.16	-0.02	0.00

	Pier1	0.1	0.2	0.3	0.4	0.5	0.6	0.7	0.8	0.9	Pier2
Steel Dead Load	0.00	0.00	0.00	0.01	0.02	0.02	0.02	0.01	0.00	0.00	0.00
Fluid Interior	0.00	-0.03	0.01	0.06	0.11	0.12	0.11	0.06	0.01	-0.03	0.00
SIDL Int	0.00	0.01	0.03	0.05	0.06	0.06	0.06	0.05	0.03	0.01	0.00
Residual Camber	0.00	0.00	0.13	0.50	0.88	1.00	0.88	0.50	0.13	0.00	0.00
Total Camber Int	0.00	-0.02	0.16	0.62	1.06	1.21	1.06	0.62	0.16	-0.02	0.00

Bottom Of Slab Elevations

	Pier1	0.1	0.2	0.3	0.4	0.5	0.6	0.7	0.8	0.9	Pier2
G1	449.61	449.54	449.47	449.41	449.35	449.28	449.21	449.13	449.06	448.99	448.92
G2	449.88	449.81	449.75	449.68	449.62	449.55	449.48	449.41	449.33	449.26	449.19
G3	450.04	449.97	449.91	449.84	449.78	449.71	449.64	449.57	449.49	449.42	449.35
G4	449.89	449.82	449.76	449.69	449.63	449.56	449.49	449.42	449.34	449.27	449.20

CALDERWOOD ENGINEERING
222 RIVER ROAD
RICHMOND, ME 04357
PH. (207) 737-2007 FAX (207) 737-2008

SPAN 3

	Pier2	0.1	0.2	0.3	0.4	0.5	0.6	0.7	0.8	0.9	Abut2
Steel Dead Load	0.00	0.02	0.04	0.07	0.09	0.11	0.11	0.10	0.07	0.04	0.00
Fluid Exterior	0.00	0.08	0.20	0.32	0.43	0.49	0.49	0.44	0.33	0.18	0.00
SIDL Ext	0.00	0.02	0.05	0.07	0.09	0.10	0.10	0.09	0.07	0.04	0.00
Residual Camber	0.00	0.38	0.63	0.88	1.00	0.94	0.88	0.63	0.38	0.19	0.00
Total Camber Ext	0.00	0.50	0.92	1.34	1.61	1.63	1.57	1.25	0.84	0.44	0.00

	Pier2	0.1	0.2	0.3	0.4	0.5	0.6	0.7	0.8	0.9	Abut2
Steel Dead Load	0.00	0.02	0.04	0.07	0.09	0.11	0.11	0.10	0.07	0.04	0.00
Fluid Interior	0.00	0.11	0.27	0.44	0.57	0.65	0.66	0.59	0.44	0.24	0.00
SIDL Int	0.00	0.02	0.05	0.08	0.10	0.11	0.11	0.09	0.07	0.04	0.00
Residual Camber	0.00	0.38	0.63	0.88	1.00	0.94	0.88	0.63	0.38	0.19	0.00
Total Camber Int	0.00	0.52	0.99	1.46	1.76	1.80	1.75	1.40	0.96	0.50	0.00

Bottom Of Slab Elevations

	Pier2	0.1	0.2	0.3	0.4	0.5	0.6	0.7	0.8	0.9	Abut2
G1	448.92	448.86	448.81	448.76	448.70	448.64	448.58	448.51	448.43	448.35	448.27
G2	449.19	449.14	449.09	449.04	448.98	448.93	448.86	448.79	448.71	448.62	448.54
G3	449.35	449.30	449.25	449.20	449.15	449.09	449.02	448.95	448.87	448.79	448.70
G4	449.20	449.15	449.09	449.04	448.98	448.92	448.86	448.79	448.71	448.63	448.55

Profile grade -1% Profile is along baseline - Crown is at Baseline

Skew 30 deg Ahead on Left

Station

Finished Grade at Abutment #1 CL Brg. Station 22+13.13 451.76 ft

Offset to Girder G1 from BL = 18.25 ft Left

Spacing of Girders 10.5 ft

(Elevations are in Feet)

Station of girder lines at abutment #1 CL	Offset		Abut #1 CL Brg	Finished Grade	Pier#1 CL Brg	Finished Grade	Pier#2 CL Brg	Finished Grade	Abut #2 CL Brg	Finished Grade
	18.25	G1	22+23.67	451.29	22+89.17	450.63	23+58.17	449.94	24+23.67	449.29
	7.75	G2	22+17.60	451.56	22+83.10	450.90	23+52.10	450.21	24+17.60	449.56
	-2.75	G3	22+11.54	451.72	22+77.04	451.06	23+46.04	450.37	24+11.54	449.72
	-13.25	G4	22+05.48	451.57	22+70.98	450.91	23+39.98	450.22	24+05.48	449.57

Pavement thickness	3.25	in			
Deck thickness	9	in	Sole Plate thickness ave	0.90	inches
Theoretical Blocking	2	in	Brg Pad Thickness	0.625	inches
girder depth	37.25	in			
			Total Brg Height	1.53	inches
Total Super. Depth	4.291666667	ft			

Top of Leveling Plate Elevations - top of Sole Plate Elevations (Elevations are in Feet)

	A1 Lvl Pl elev	P1 Sole Plat elev	Ped Elev	P2 Sole Plat elev	Ped Elev	A2 Lvl Pl elev
G1	446.99	446.34	446.21	445.65	445.65	444.99
G2	447.27	446.61	446.61	445.92	445.92	445.27
G3	447.43	446.77	446.77	446.08	446.08	445.43
G4	447.28	446.62	446.62	445.93	445.93	445.28
min CJ elev A1	446.76					444.76 min CJ elev A2

CALDERWOOD ENGINEERING
222 RIVER ROAD
RICHMOND, ME 04357
PH. (207) 737-2007 FAX (207) 737-2008

$S_s := 15\%$
$S_1 := 4.4\%$
$PGA := 7.0\%$

Site Class C- material over 50 blow counts overlying rock

$F_{pga} := 1.2$ *For Site Class C with a PGA < 10% from AASHTO Table 3.10.3.2-1*

$A_s := F_{pga} \cdot PGA = 0.084$ *We are in Seismic Zone 1 As > 0.05 therefor use 25% vertical reaction for Hz loads*

$\gamma_{eq} := 0.50$

$P_{rinteel} := \gamma_{eq} \cdot \left(1.33 \cdot \max\left(R_{pnmtt}, R_{phs20}\right) + R_{LanePier}\right) + R_{pinDCS} + R_{pinDWS} = 212.428\ kip$

$P_{rexteel} := \gamma_{eq} \cdot \left(1.33 \cdot \max\left(R_{pnmtt}, R_{phs20}\right) + R_{LanePier}\right) + R_{pexDCS} + R_{pexDWS} = 184.578\ kip$

$$H_{load} := \frac{25\% \cdot \max\left(P_{rinteel}, P_{rexteel}\right)}{2} = 26.5535\ kip$$

$$V_{ar} := \frac{H_{load}}{\pi \cdot \left(\frac{d_{prov}}{2}\right)^2} = 21.6377\ ksi$$

$$R_{nee1} := 0.38 \cdot \pi \cdot \left(\frac{d_{prov}}{2}\right)^2 \cdot F_{uAR} = 58.2913\ kip$$ *Rn threads included in shear plane*

$R_{Ree1} := R_{nee1} \cdot 1.0 = 58.2913\ kip$ *Rr=Rn for EEI phi - 1.0*

$$M_{uee1} := H_{load} \cdot \left(h_{ri} + \frac{t_{max}}{2}\right) = 31.5323\ in \cdot kip$$

$$M_{pAR} := \frac{d_{prov}^3}{6} \cdot F_{yAR} = 34.1797\ in \cdot kip$$

$M_{rAR} := M_{pAR} = 34.1797\ in \cdot kip$ *Mr>Mu therefor okay*

Joint Deflections (By Item)

	LC	Joint Label	X [in]	Y [in]	Z [in]	X Rotation [rad]	Y Rotation [rad]	Z Rotation [rad]
1	1	N1	0	0	0	0	0	-5.075e-4
2	1	N2	0	-.039	0	0	0	-4.692e-4
3	1	N3	0	-.072	0	0	0	-3.686e-4
4	1	N4	0	-.096	0	0	0	-2.27e-4
5	1	N5	0	-.108	0	0	0	-6.573e-5
6	1	N6	0	-.106	0	0	0	9.384e-5
7	1	N7	0	-.093	0	0	0	2.304e-4
8	1	N8	0	-.071	0	0	0	3.226e-4
9	1	N9	0	-.057	0	0	0	3.459e-4
10	1	N10	0	-.044	0	0	0	3.487e-4
11	1	N11	0	-.018	0	0	0	2.941e-4
12	1	N12	0	0	0	0	0	1.407e-4
13	1	N13	0	.004	0	0	0	-2.617e-5
14	1	N14	0	-.002	0	0	0	-1.012e-4
15	1	N15	0	-.007	0	0	0	-1.121e-4
16	1	N16	0	-.011	0	0	0	-1.081e-4
17	1	N17	0	-.019	0	0	0	-6.653e-5
18	1	N18	0	-.022	0	0	0	0
19	1	N19	0	-.019	0	0	0	6.653e-5
20	1	N20	0	-.011	0	0	0	1.081e-4
21	1	N21	0	-.007	0	0	0	1.121e-4
22	1	N22	0	-.002	0	0	0	1.012e-4
23	1	N23	0	.004	0	0	0	2.617e-5
24	1	N24	0	0	0	0	0	-1.407e-4
25	1	N25	0	-.018	0	0	0	-2.941e-4
26	1	N26	0	-.044	0	0	0	-3.487e-4
27	1	N27	0	-.057	0	0	0	-3.459e-4
28	1	N28	0	-.071	0	0	0	-3.226e-4
29	1	N29	0	-.093	0	0	0	-2.304e-4
30	1	N30	0	-.106	0	0	0	-9.384e-5
31	1	N31	0	-.108	0	0	0	6.573e-5
32	1	N32	0	-.096	0	0	0	2.27e-4
33	1	N33	0	-.072	0	0	0	3.686e-4
34	1	N34	0	-.039	0	0	0	4.692e-4
35	1	N35	0	0	0	0	0	5.075e-4

Joint Deflections (By Item)

	LC	Joint Label	X [in]	Y [in]	Z [in]	X Rotation [rad]	Y Rotation [rad]	Z Rotation [rad]
1	2	N1	0	0	0	0	0	-2.311e-3
2	2	N2	0	-.178	0	0	0	-2.137e-3
3	2	N3	0	-.33	0	0	0	-1.678e-3
4	2	N4	0	-.438	0	0	0	-1.033e-3
5	2	N5	0	-.49	0	0	0	-2.988e-4
6	2	N6	0	-.485	0	0	0	4.276e-4
7	2	N7	0	-.425	0	0	0	1.049e-3
8	2	N8	0	-.324	0	0	0	1.467e-3
9	2	N9	0	-.261	0	0	0	1.573e-3
10	2	N10	0	-.201	0	0	0	1.585e-3
11	2	N11	0	-.083	0	0	0	1.338e-3
12	2	N12	0	0	0	0	0	6.547e-4
13	2	N13	0	.019	0	0	0	-9.136e-5
14	2	N14	0	-.006	0	0	0	-4.349e-4
15	2	N15	0	-.029	0	0	0	-4.891e-4
16	2	N16	0	-.046	0	0	0	-4.748e-4
17	2	N17	0	-.079	0	0	0	-2.943e-4
18	2	N18	0	-.092	0	0	0	0
19	2	N19	0	-.079	0	0	0	2.943e-4
20	2	N20	0	-.046	0	0	0	4.748e-4
21	2	N21	0	-.029	0	0	0	4.891e-4
22	2	N22	0	-.006	0	0	0	4.349e-4
23	2	N23	0	.019	0	0	0	9.136e-5
24	2	N24	0	0	0	0	0	-6.547e-4
25	2	N25	0	-.083	0	0	0	-1.338e-3
26	2	N26	0	-.201	0	0	0	-1.585e-3
27	2	N27	0	-.261	0	0	0	-1.573e-3
28	2	N28	0	-.324	0	0	0	-1.467e-3
29	2	N29	0	-.425	0	0	0	-1.049e-3
30	2	N30	0	-.485	0	0	0	-4.276e-4
31	2	N31	0	-.49	0	0	0	2.988e-4
32	2	N32	0	-.438	0	0	0	1.033e-3
33	2	N33	0	-.33	0	0	0	1.678e-3
34	2	N34	0	-.178	0	0	0	2.137e-3
35	2	N35	0	0	0	0	0	2.311e-3

Joint Deflections (By Item)

	LC	Joint Label	X [in]	Y [in]	Z [in]	X Rotation [rad]	Y Rotation [rad]	Z Rotation [rad]
1	1	N1	0	0	0	0	0	-4.519e-4
2	1	N2	0	-.035	0	0	0	-4.209e-4
3	1	N3	0	-.065	0	0	0	-3.387e-4
4	1	N4	0	-.087	0	0	0	-2.214e-4
5	1	N5	0	-.099	0	0	0	-8.504e-5
6	1	N6	0	-.101	0	0	0	5.424e-5
7	1	N7	0	-.091	0	0	0	1.803e-4
8	1	N8	0	-.073	0	0	0	2.772e-4
9	1	N9	0	-.061	0	0	0	3.106e-4
10	1	N10	0	-.048	0	0	0	3.61e-4
11	1	N11	0	-.019	0	0	0	3.33e-4
12	1	N12	0	0	0	0	0	8.793e-5
13	1	N13	0	-.006	0	0	0	-1.775e-4
14	1	N14	0	-.025	0	0	0	-2.323e-4
15	1	N15	0	-.035	0	0	0	-1.893e-4
16	1	N16	0	-.041	0	0	0	-1.678e-4
17	1	N17	0	-.052	0	0	0	-9.332e-5
18	1	N18	0	-.056	0	0	0	0
19	1	N19	0	-.052	0	0	0	9.332e-5
20	1	N20	0	-.041	0	0	0	1.678e-4
21	1	N21	0	-.035	0	0	0	1.893e-4
22	1	N22	0	-.025	0	0	0	2.323e-4
23	1	N23	0	-.006	0	0	0	1.775e-4
24	1	N24	0	0	0	0	0	-8.793e-5
25	1	N25	0	-.019	0	0	0	-3.33e-4
26	1	N26	0	-.048	0	0	0	-3.61e-4
27	1	N27	0	-.061	0	0	0	-3.106e-4
28	1	N28	0	-.073	0	0	0	-2.772e-4
29	1	N29	0	-.091	0	0	0	-1.803e-4
30	1	N30	0	-.101	0	0	0	-5.424e-5
31	1	N31	0	-.099	0	0	0	8.504e-5
32	1	N32	0	-.087	0	0	0	2.214e-4
33	1	N33	0	-.065	0	0	0	3.387e-4
34	1	N34	0	-.035	0	0	0	4.209e-4
35	1	N35	0	0	0	0	0	4.519e-4

Joint Deflections (By Item)

	LC	Joint Label	X [in]	Y [in]	Z [in]	X Rotation [rad]	Y Rotation [rad]	Z Rotation [rad]
1	3	N1	0	0	0	0	0	-3.099e-3
2	3	N2	0	-.238	0	0	0	-2.865e-3
3	3	N3	0	-.442	0	0	0	-2.25e-3
4	3	N4	0	-.587	0	0	0	-1.385e-3
5	3	N5	0	-.658	0	0	0	-4.007e-4
6	3	N6	0	-.65	0	0	0	5.733e-4
7	3	N7	0	-.57	0	0	0	1.406e-3
8	3	N8	0	-.435	0	0	0	1.968e-3
9	3	N9	0	-.351	0	0	0	2.109e-3
10	3	N10	0	-.27	0	0	0	2.125e-3
11	3	N11	0	-.111	0	0	0	1.795e-3
12	3	N12	0	0	0	0	0	8.779e-4
13	3	N13	0	.026	0	0	0	-1.225e-4
14	3	N14	0	-.008	0	0	0	-5.831e-4
15	3	N15	0	-.038	0	0	0	-6.559e-4
16	3	N16	0	-.062	0	0	0	-6.366e-4
17	3	N17	0	-.107	0	0	0	-3.946e-4
18	3	N18	0	-.124	0	0	0	0
19	3	N19	0	-.107	0	0	0	3.946e-4
20	3	N20	0	-.062	0	0	0	6.366e-4
21	3	N21	0	-.038	0	0	0	6.559e-4
22	3	N22	0	-.008	0	0	0	5.831e-4
23	3	N23	0	.026	0	0	0	1.225e-4
24	3	N24	0	0	0	0	0	-8.779e-4
25	3	N25	0	-.111	0	0	0	-1.795e-3
26	3	N26	0	-.27	0	0	0	-2.125e-3
27	3	N27	0	-.351	0	0	0	-2.109e-3
28	3	N28	0	-.435	0	0	0	-1.968e-3
29	3	N29	0	-.57	0	0	0	-1.406e-3
30	3	N30	0	-.65	0	0	0	-5.733e-4
31	3	N31	0	-.658	0	0	0	4.007e-4
32	3	N32	0	-.587	0	0	0	1.385e-3
33	3	N33	0	-.442	0	0	0	2.25e-3
34	3	N34	0	-.238	0	0	0	2.865e-3
35	3	N35	0	0	0	0	0	3.099e-3

Joint Deflections (By Item)

	LC	Joint Label	X [in]	Y [in]	Z [in]	X Rotation [rad]	Y Rotation [rad]	Z Rotation [rad]
1	1	N1	0	0	0	0	0	-4.789e-4
2	1	N2	0	-.037	0	0	0	-4.464e-4
3	1	N3	0	-.069	0	0	0	-3.601e-4
4	1	N4	0	-.093	0	0	0	-2.368e-4
5	1	N5	0	-.106	0	0	0	-9.339e-5
6	1	N6	0	-.107	0	0	0	5.344e-5
7	1	N7	0	-.098	0	0	0	1.868e-4
8	1	N8	0	-.079	0	0	0	2.9e-4
9	1	N9	0	-.066	0	0	0	3.261e-4
10	1	N10	0	-.052	0	0	0	3.887e-4
11	1	N11	0	-.02	0	0	0	3.647e-4
12	1	N12	0	0	0	0	0	8.911e-5
13	1	N13	0	-.008	0	0	0	-2.091e-4
14	1	N14	0	-.029	0	0	0	-2.622e-4
15	1	N15	0	-.041	0	0	0	-2.059e-4
16	1	N16	0	-.048	0	0	0	-1.82e-4
17	1	N17	0	-.059	0	0	0	-1.008e-4
18	1	N18	0	-.064	0	0	0	0
19	1	N19	0	-.059	0	0	0	1.008e-4
20	1	N20	0	-.048	0	0	0	1.82e-4
21	1	N21	0	-.041	0	0	0	2.059e-4
22	1	N22	0	-.029	0	0	0	2.622e-4
23	1	N23	0	-.008	0	0	0	2.091e-4
24	1	N24	0	0	0	0	0	-8.911e-5
25	1	N25	0	-.02	0	0	0	-3.647e-4
26	1	N26	0	-.052	0	0	0	-3.887e-4
27	1	N27	0	-.066	0	0	0	-3.261e-4
28	1	N28	0	-.079	0	0	0	-2.9e-4
29	1	N29	0	-.098	0	0	0	-1.868e-4
30	1	N30	0	-.107	0	0	0	-5.344e-5
31	1	N31	0	-.106	0	0	0	9.339e-5
32	1	N32	0	-.093	0	0	0	2.368e-4
33	1	N33	0	-.069	0	0	0	3.601e-4
34	1	N34	0	-.037	0	0	0	4.464e-4
35	1	N35	0	0	0	0	0	4.789e-4

Envelope Joint Displacements

	Joint		X [in]	LC	Y [in]	LC	Z [in]	LC	X Rotatio...	LC	Y Rotatio...	LC	Z Rotatio...	LC
1	N1	max	0	1	0	1	0	1	0	1	0	1	2.597e-4	1
2		min	0	1	0	1	0	1	0	1	0	1	-9.822e-4	1
3	N2	max	0	1	.02	1	0	1	0	1	0	1	2.536e-4	1
4		min	0	1	-.076	1	0	1	0	1	0	1	-9.329e-4	1
5	N3	max	0	1	.04	1	0	1	0	1	0	1	2.352e-4	1
6		min	0	1	-.144	1	0	1	0	1	0	1	-7.913e-4	1
7	N4	max	0	1	.057	1	0	1	0	1	0	1	2.047e-4	1
8		min	0	1	-.198	1	0	1	0	1	0	1	-5.785e-4	1
9	N5	max	0	1	.071	1	0	1	0	1	0	1	1.619e-4	1
10		min	0	1	-.231	1	0	1	0	1	0	1	-3.333e-4	1
11	N6	max	0	1	.082	1	0	1	0	1	0	1	1.248e-4	1
12		min	0	1	-.241	1	0	1	0	1	0	1	-1.174e-4	1
13	N7	max	0	1	.088	1	0	1	0	1	0	1	3.511e-4	1
14		min	0	1	-.229	1	0	1	0	1	0	1	-7.8e-6	1
15	N8	max	0	1	.088	1	0	1	0	1	0	1	5.617e-4	1
16		min	0	1	-.197	1	0	1	0	1	0	1	-3.981e-5	1
17	N9	max	0	1	.086	1	0	1	0	1	0	1	6.463e-4	1
18		min	0	1	-.175	1	0	1	0	1	0	1	-8.587e-5	1
19	N10	max	0	1	.08	1	0	1	0	1	0	1	8.165e-4	1
20		min	0	1	-.148	1	0	1	0	1	0	1	-2.134e-4	1
21	N11	max	0	1	.052	1	0	1	0	1	0	1	9.866e-4	1
22		min	0	1	-.075	1	0	1	0	1	0	1	-5.04e-4	1
23	N12	max	0	1	0	1	0	1	0	1	0	1	8.282e-4	1
24		min	0	1	0	1	0	1	0	1	0	1	-8.287e-4	1
25	N13	max	0	1	.054	1	0	1	0	1	0	1	4.908e-4	1
26		min	0	1	-.079	1	0	1	0	1	0	1	-9.956e-4	1
27	N14	max	0	1	.082	1	0	1	0	1	0	1	2.187e-4	1
28		min	0	1	-.156	1	0	1	0	1	0	1	-8.161e-4	1
29	N15	max	0	1	.088	1	0	1	0	1	0	1	2.03e-4	1
30		min	0	1	-.188	1	0	1	0	1	0	1	-6.094e-4	1
31	N16	max	0	1	.089	1	0	1	0	1	0	1	1.956e-4	1
32		min	0	1	-.206	1	0	1	0	1	0	1	-5.418e-4	1
33	N17	max	0	1	.087	1	0	1	0	1	0	1	1.671e-4	1
34		min	0	1	-.237	1	0	1	0	1	0	1	-3.5e-4	1
35	N18	max	0	1	.079	1	0	1	0	1	0	1	1.562e-4	1
36		min	0	1	-.247	1	0	1	0	1	0	1	-1.562e-4	1
37	N19	max	0	1	.087	1	0	1	0	1	0	1	3.5e-4	1
38		min	0	1	-.237	1	0	1	0	1	0	1	-1.671e-4	1
39	N20	max	0	1	.089	1	0	1	0	1	0	1	5.418e-4	1
40		min	0	1	-.206	1	0	1	0	1	0	1	-1.956e-4	1
41	N21	max	0	1	.088	1	0	1	0	1	0	1	6.094e-4	1
42		min	0	1	-.188	1	0	1	0	1	0	1	-2.03e-4	1
43	N22	max	0	1	.082	1	0	1	0	1	0	1	8.161e-4	1
44		min	0	1	-.156	1	0	1	0	1	0	1	-2.187e-4	1
45	N23	max	0	1	.054	1	0	1	0	1	0	1	9.956e-4	1
46		min	0	1	-.079	1	0	1	0	1	0	1	-4.908e-4	1
47	N24	max	0	1	0	1	0	1	0	1	0	1	8.287e-4	1
48		min	0	1	0	1	0	1	0	1	0	1	-8.282e-4	1
49	N25	max	0	1	.052	1	0	1	0	1	0	1	5.04e-4	1
50		min	0	1	-.075	1	0	1	0	1	0	1	-9.866e-4	1
51	N26	max	0	1	.08	1	0	1	0	1	0	1	2.134e-4	1
52		min	0	1	-.148	1	0	1	0	1	0	1	-8.165e-4	1
53	N27	max	0	1	.086	1	0	1	0	1	0	1	8.587e-5	1
54		min	0	1	-.175	1	0	1	0	1	0	1	-6.463e-4	1
55	N28	max	0	1	.088	1	0	1	0	1	0	1	3.981e-5	1
56		min	0	1	-.197	1	0	1	0	1	0	1	-5.617e-4	1

Envelope Joint Displacements (Continued)

	Joint		X [in]	LC	Y [in]	LC	Z [in]	LC	X Rotatio...	LC	Y Rotatio...	LC	Z Rotatio...	LC
57	N29	max	0	1	.088	1	0	1	0	1	0	1	7.8e-6	1
58		min	0	1	-.229	1	0	1	0	1	0	1	-3.511e-4	1
59	N30	max	0	1	.082	1	0	1	0	1	0	1	1.174e-4	1
60		min	0	1	-.241	1	0	1	0	1	0	1	-1.248e-4	1
61	N31	max	0	1	.071	1	0	1	0	1	0	1	3.333e-4	1
62		min	0	1	-.231	1	0	1	0	1	0	1	-1.619e-4	1
63	N32	max	0	1	.057	1	0	1	0	1	0	1	5.785e-4	1
64		min	0	1	-.198	1	0	1	0	1	0	1	-2.047e-4	1
65	N33	max	0	1	.04	1	0	1	0	1	0	1	7.913e-4	1
66		min	0	1	-.144	1	0	1	0	1	0	1	-2.352e-4	1
67	N34	max	0	1	.02	1	0	1	0	1	0	1	9.329e-4	1
68		min	0	1	-.076	1	0	1	0	1	0	1	-2.536e-4	1
69	N35	max	0	1	0	1	0	1	0	1	0	1	9.822e-4	1
70		min	0	1	0	1	0	1	0	1	0	1	-2.597e-4	1

Envelope Joint Displacements

	Joint		X [in]	LC	Y [in]	LC	Z [in]	LC	X Rotatio...	LC	Y Rotatio...	LC	Z Rotatio...	LC
1	N1	max	0	2	0	2	0	2	0	2	0	2	-2.266e-4	2
2		min	0	2	0	2	0	2	0	2	0	2	-5.094e-4	2
3	N2	max	0	2	-.017	2	0	2	0	2	0	2	-2.086e-4	2
4		min	0	2	-.039	2	0	2	0	2	0	2	-4.789e-4	2
5	N3	max	0	2	-.032	2	0	2	0	2	0	2	-1.611e-4	2
6		min	0	2	-.074	2	0	2	0	2	0	2	-3.957e-4	2
7	N4	max	0	2	-.042	2	0	2	0	2	0	2	-9.42e-5	2
8		min	0	2	-.1	2	0	2	0	2	0	2	-2.744e-4	2
9	N5	max	0	2	-.047	2	0	2	0	2	0	2	-1.795e-5	2
10		min	0	2	-.116	2	0	2	0	2	0	2	-1.338e-4	2
11	N6	max	0	2	-.045	2	0	2	0	2	0	2	5.868e-5	2
12		min	0	2	-.119	2	0	2	0	2	0	2	2.853e-6	2
13	N7	max	0	2	-.038	2	0	2	0	2	0	2	1.889e-4	2
14		min	0	2	-.111	2	0	2	0	2	0	2	1.095e-4	2
15	N8	max	0	2	-.026	2	0	2	0	2	0	2	2.981e-4	2
16		min	0	2	-.093	2	0	2	0	2	0	2	1.667e-4	2
17	N9	max	0	2	-.019	2	0	2	0	2	0	2	3.388e-4	2
18		min	0	2	-.08	2	0	2	0	2	0	2	1.781e-4	2
19	N10	max	0	2	-.012	2	0	2	0	2	0	2	4.2e-4	2
20		min	0	2	-.066	2	0	2	0	2	0	2	1.842e-4	2
21	N11	max	0	2	0	2	0	2	0	2	0	2	4.517e-4	2
22		min	0	2	-.03	2	0	2	0	2	0	2	9.857e-5	2
23	N12	max	0	2	0	2	0	2	0	2	0	2	2.505e-4	2
24		min	0	2	0	2	0	2	0	2	0	2	-1.457e-4	2
25	N13	max	0	2	.008	2	0	2	0	2	0	2	-9.296e-6	2
26		min	0	2	-.024	2	0	2	0	2	0	2	-3.636e-4	2
27	N14	max	0	2	.002	2	0	2	0	2	0	2	-1.062e-4	2
28		min	0	2	-.055	2	0	2	0	2	0	2	-3.476e-4	2
29	N15	max	0	2	-.004	2	0	2	0	2	0	2	-7.652e-5	2
30		min	0	2	-.069	2	0	2	0	2	0	2	-2.615e-4	2
31	N16	max	0	2	-.008	2	0	2	0	2	0	2	-6.393e-5	2
32		min	0	2	-.077	2	0	2	0	2	0	2	-2.321e-4	2
33	N17	max	0	2	-.015	2	0	2	0	2	0	2	-2.169e-5	2
34		min	0	2	-.091	2	0	2	0	2	0	2	-1.408e-4	2
35	N18	max	0	2	-.02	2	0	2	0	2	0	2	3.714e-5	2
36		min	0	2	-.096	2	0	2	0	2	0	2	-3.714e-5	2
37	N19	max	0	2	-.015	2	0	2	0	2	0	2	1.408e-4	2
38		min	0	2	-.091	2	0	2	0	2	0	2	2.169e-5	2
39	N20	max	0	2	-.008	2	0	2	0	2	0	2	2.321e-4	2
40		min	0	2	-.077	2	0	2	0	2	0	2	6.393e-5	2
41	N21	max	0	2	-.004	2	0	2	0	2	0	2	2.615e-4	2
42		min	0	2	-.069	2	0	2	0	2	0	2	7.652e-5	2
43	N22	max	0	2	.002	2	0	2	0	2	0	2	3.476e-4	2
44		min	0	2	-.055	2	0	2	0	2	0	2	1.062e-4	2
45	N23	max	0	2	.008	2	0	2	0	2	0	2	3.636e-4	2
46		min	0	2	-.024	2	0	2	0	2	0	2	9.296e-6	2
47	N24	max	0	2	0	2	0	2	0	2	0	2	1.457e-4	2
48		min	0	2	0	2	0	2	0	2	0	2	-2.505e-4	2
49	N25	max	0	2	0	2	0	2	0	2	0	2	-9.857e-5	2
50		min	0	2	-.03	2	0	2	0	2	0	2	-4.517e-4	2
51	N26	max	0	2	-.012	2	0	2	0	2	0	2	-1.842e-4	2
52		min	0	2	-.066	2	0	2	0	2	0	2	-4.2e-4	2
53	N27	max	0	2	-.019	2	0	2	0	2	0	2	-1.781e-4	2
54		min	0	2	-.08	2	0	2	0	2	0	2	-3.388e-4	2
55	N28	max	0	2	-.026	2	0	2	0	2	0	2	-1.667e-4	2
56		min	0	2	-.093	2	0	2	0	2	0	2	-2.981e-4	2

Envelope Joint Displacements (Continued)

	Joint		X [in]	LC	Y [in]	LC	Z [in]	LC	X Rotatio...	LC	Y Rotatio...	LC	Z Rotatio...	LC
57	N29	max	0	2	-.038	2	0	2	0	2	0	2	-1.095e-4	2
58		min	0	2	-.111	2	0	2	0	2	0	2	-1.889e-4	2
59	N30	max	0	2	-.045	2	0	2	0	2	0	2	-2.853e-6	2
60		min	0	2	-.119	2	0	2	0	2	0	2	-5.868e-5	2
61	N31	max	0	2	-.047	2	0	2	0	2	0	2	1.338e-4	2
62		min	0	2	-.116	2	0	2	0	2	0	2	1.795e-5	2
63	N32	max	0	2	-.042	2	0	2	0	2	0	2	2.744e-4	2
64		min	0	2	-.1	2	0	2	0	2	0	2	9.42e-5	2
65	N33	max	0	2	-.032	2	0	2	0	2	0	2	3.957e-4	2
66		min	0	2	-.074	2	0	2	0	2	0	2	1.611e-4	2
67	N34	max	0	2	-.017	2	0	2	0	2	0	2	4.789e-4	2
68		min	0	2	-.039	2	0	2	0	2	0	2	2.086e-4	2
69	N35	max	0	2	0	2	0	2	0	2	0	2	5.094e-4	2
70		min	0	2	0	2	0	2	0	2	0	2	2.266e-4	2

Envelope Joint Displacements

	Joint		X [in]	LC	Y [in]	LC	Z [in]	LC	X Rotatio...	LC	Y Rotatio...	LC	Z Rotatio...	LC
1	N1	max	0	1	0	1	0	1	0	1	0	1	2.373e-4	1
2		min	0	1	0	1	0	1	0	1	0	1	-8.937e-4	1
3	N2	max	0	1	.019	1	0	1	0	1	0	1	2.319e-4	1
4		min	0	1	-.069	1	0	1	0	1	0	1	-8.493e-4	1
5	N3	max	0	1	.036	1	0	1	0	1	0	1	2.158e-4	1
6		min	0	1	-.132	1	0	1	0	1	0	1	-7.227e-4	1
7	N4	max	0	1	.052	1	0	1	0	1	0	1	1.889e-4	1
8		min	0	1	-.181	1	0	1	0	1	0	1	-5.318e-4	1
9	N5	max	0	1	.066	1	0	1	0	1	0	1	1.513e-4	1
10		min	0	1	-.211	1	0	1	0	1	0	1	-3.122e-4	1
11	N6	max	0	1	.076	1	0	1	0	1	0	1	1.071e-4	1
12		min	0	1	-.221	1	0	1	0	1	0	1	-1.162e-4	1
13	N7	max	0	1	.082	1	0	1	0	1	0	1	3.094e-4	1
14		min	0	1	-.211	1	0	1	0	1	0	1	-8.291e-6	1
15	N8	max	0	1	.082	1	0	1	0	1	0	1	4.995e-4	1
16		min	0	1	-.184	1	0	1	0	1	0	1	-2.61e-5	1
17	N9	max	0	1	.08	1	0	1	0	1	0	1	5.765e-4	1
18		min	0	1	-.164	1	0	1	0	1	0	1	-6.661e-5	1
19	N10	max	0	1	.076	1	0	1	0	1	0	1	7.515e-4	1
20		min	0	1	-.14	1	0	1	0	1	0	1	-1.918e-4	1
21	N11	max	0	1	.05	1	0	1	0	1	0	1	9.358e-4	1
22		min	0	1	-.071	1	0	1	0	1	0	1	-4.769e-4	1
23	N12	max	0	1	0	1	0	1	0	1	0	1	7.891e-4	1
24		min	0	1	0	1	0	1	0	1	0	1	-7.955e-4	1
25	N13	max	0	1	.051	1	0	1	0	1	0	1	4.624e-4	1
26		min	0	1	-.076	1	0	1	0	1	0	1	-9.547e-4	1
27	N14	max	0	1	.078	1	0	1	0	1	0	1	2.017e-4	1
28		min	0	1	-.149	1	0	1	0	1	0	1	-7.642e-4	1
29	N15	max	0	1	.082	1	0	1	0	1	0	1	1.858e-4	1
30		min	0	1	-.179	1	0	1	0	1	0	1	-5.541e-4	1
31	N16	max	0	1	.083	1	0	1	0	1	0	1	1.791e-4	1
32		min	0	1	-.195	1	0	1	0	1	0	1	-4.936e-4	1
33	N17	max	0	1	.08	1	0	1	0	1	0	1	1.541e-4	1
34		min	0	1	-.222	1	0	1	0	1	0	1	-3.222e-4	1
35	N18	max	0	1	.073	1	0	1	0	1	0	1	1.486e-4	1
36		min	0	1	-.231	1	0	1	0	1	0	1	-1.486e-4	1
37	N19	max	0	1	.08	1	0	1	0	1	0	1	3.222e-4	1
38		min	0	1	-.222	1	0	1	0	1	0	1	-1.541e-4	1
39	N20	max	0	1	.083	1	0	1	0	1	0	1	4.936e-4	1
40		min	0	1	-.195	1	0	1	0	1	0	1	-1.791e-4	1
41	N21	max	0	1	.082	1	0	1	0	1	0	1	5.541e-4	1
42		min	0	1	-.179	1	0	1	0	1	0	1	-1.858e-4	1
43	N22	max	0	1	.078	1	0	1	0	1	0	1	7.642e-4	1
44		min	0	1	-.149	1	0	1	0	1	0	1	-2.017e-4	1
45	N23	max	0	1	.051	1	0	1	0	1	0	1	9.547e-4	1
46		min	0	1	-.076	1	0	1	0	1	0	1	-4.624e-4	1
47	N24	max	0	1	0	1	0	1	0	1	0	1	7.955e-4	1
48		min	0	1	0	1	0	1	0	1	0	1	-7.891e-4	1
49	N25	max	0	1	.05	1	0	1	0	1	0	1	4.769e-4	1
50		min	0	1	-.071	1	0	1	0	1	0	1	-9.358e-4	1
51	N26	max	0	1	.076	1	0	1	0	1	0	1	1.918e-4	1
52		min	0	1	-.14	1	0	1	0	1	0	1	-7.515e-4	1
53	N27	max	0	1	.08	1	0	1	0	1	0	1	6.661e-5	1
54		min	0	1	-.164	1	0	1	0	1	0	1	-5.765e-4	1
55	N28	max	0	1	.082	1	0	1	0	1	0	1	2.61e-5	1
56		min	0	1	-.184	1	0	1	0	1	0	1	-4.995e-4	1

Envelope Joint Displacements (Continued)

	Joint		X [in]	LC	Y [in]	LC	Z [in]	LC	X Rotatio...	LC	Y Rotatio...	LC	Z Rotatio...	LC
57	N29	max	0	1	.082	1	0	1	0	1	0	1	8.291e-6	1
58		min	0	1	-.211	1	0	1	0	1	0	1	-3.094e-4	1
59	N30	max	0	1	.076	1	0	1	0	1	0	1	1.162e-4	1
60		min	0	1	-.221	1	0	1	0	1	0	1	-1.071e-4	1
61	N31	max	0	1	.066	1	0	1	0	1	0	1	3.122e-4	1
62		min	0	1	-.211	1	0	1	0	1	0	1	-1.513e-4	1
63	N32	max	0	1	.052	1	0	1	0	1	0	1	5.318e-4	1
64		min	0	1	-.181	1	0	1	0	1	0	1	-1.889e-4	1
65	N33	max	0	1	.036	1	0	1	0	1	0	1	7.227e-4	1
66		min	0	1	-.132	1	0	1	0	1	0	1	-2.158e-4	1
67	N34	max	0	1	.019	1	0	1	0	1	0	1	8.493e-4	1
68		min	0	1	-.069	1	0	1	0	1	0	1	-2.319e-4	1
69	N35	max	0	1	0	1	0	1	0	1	0	1	8.937e-4	1
70		min	0	1	0	1	0	1	0	1	0	1	-2.373e-4	1

Envelope Joint Displacements

	Joint		X [in]	LC	Y [in]	LC	Z [in]	LC	X Rotatio...	LC	Y Rotatio...	LC	Z Rotatio...	LC
1	N1	max	0	2	0	2	0	2	0	2	0	2	-2.493e-4	2
2		min	0	2	0	2	0	2	0	2	0	2	-5.598e-4	2
3	N2	max	0	2	-.019	2	0	2	0	2	0	2	-2.293e-4	2
4		min	0	2	-.043	2	0	2	0	2	0	2	-5.259e-4	2
5	N3	max	0	2	-.035	2	0	2	0	2	0	2	-1.767e-4	2
6		min	0	2	-.081	2	0	2	0	2	0	2	-4.334e-4	2
7	N4	max	0	2	-.046	2	0	2	0	2	0	2	-1.028e-4	2
8		min	0	2	-.11	2	0	2	0	2	0	2	-2.986e-4	2
9	N5	max	0	2	-.051	2	0	2	0	2	0	2	-1.866e-5	2
10		min	0	2	-.127	2	0	2	0	2	0	2	-1.425e-4	2
11	N6	max	0	2	-.049	2	0	2	0	2	0	2	6.892e-5	2
12		min	0	2	-.13	2	0	2	0	2	0	2	8.375e-6	2
13	N7	max	0	2	-.041	2	0	2	0	2	0	2	2.132e-4	2
14		min	0	2	-.121	2	0	2	0	2	0	2	1.235e-4	2
15	N8	max	0	2	-.029	2	0	2	0	2	0	2	3.331e-4	2
16		min	0	2	-.1	2	0	2	0	2	0	2	1.828e-4	2
17	N9	max	0	2	-.021	2	0	2	0	2	0	2	3.775e-4	2
18		min	0	2	-.086	2	0	2	0	2	0	2	1.945e-4	2
19	N10	max	0	2	-.013	2	0	2	0	2	0	2	4.552e-4	2
20		min	0	2	-.07	2	0	2	0	2	0	2	1.977e-4	2
21	N11	max	0	2	0	2	0	2	0	2	0	2	4.782e-4	2
22		min	0	2	-.032	2	0	2	0	2	0	2	1.055e-4	2
23	N12	max	0	2	0	2	0	2	0	2	0	2	2.682e-4	2
24		min	0	2	0	2	0	2	0	2	0	2	-1.46e-4	2
25	N13	max	0	2	.009	2	0	2	0	2	0	2	-7.151e-7	2
26		min	0	2	-.024	2	0	2	0	2	0	2	-3.723e-4	2
27	N14	max	0	2	.003	2	0	2	0	2	0	2	-1.069e-4	2
28		min	0	2	-.056	2	0	2	0	2	0	2	-3.656e-4	2
29	N15	max	0	2	-.002	2	0	2	0	2	0	2	-8.085e-5	2
30		min	0	2	-.071	2	0	2	0	2	0	2	-2.84e-4	2
31	N16	max	0	2	-.007	2	0	2	0	2	0	2	-6.78e-5	2
32		min	0	2	-.08	2	0	2	0	2	0	2	-2.521e-4	2
33	N17	max	0	2	-.015	2	0	2	0	2	0	2	-2.311e-5	2
34		min	0	2	-.096	2	0	2	0	2	0	2	-1.524e-4	2
35	N18	max	0	2	-.019	2	0	2	0	2	0	2	3.905e-5	2
36		min	0	2	-.101	2	0	2	0	2	0	2	-3.905e-5	2
37	N19	max	0	2	-.015	2	0	2	0	2	0	2	1.524e-4	2
38		min	0	2	-.096	2	0	2	0	2	0	2	2.311e-5	2
39	N20	max	0	2	-.007	2	0	2	0	2	0	2	2.521e-4	2
40		min	0	2	-.08	2	0	2	0	2	0	2	6.78e-5	2
41	N21	max	0	2	-.002	2	0	2	0	2	0	2	2.84e-4	2
42		min	0	2	-.071	2	0	2	0	2	0	2	8.085e-5	2
43	N22	max	0	2	.003	2	0	2	0	2	0	2	3.656e-4	2
44		min	0	2	-.056	2	0	2	0	2	0	2	1.069e-4	2
45	N23	max	0	2	.009	2	0	2	0	2	0	2	3.723e-4	2
46		min	0	2	-.024	2	0	2	0	2	0	2	7.151e-7	2
47	N24	max	0	2	0	2	0	2	0	2	0	2	1.46e-4	2
48		min	0	2	0	2	0	2	0	2	0	2	-2.682e-4	2
49	N25	max	0	2	0	2	0	2	0	2	0	2	-1.055e-4	2
50		min	0	2	-.032	2	0	2	0	2	0	2	-4.782e-4	2
51	N26	max	0	2	-.013	2	0	2	0	2	0	2	-1.977e-4	2
52		min	0	2	-.07	2	0	2	0	2	0	2	-4.552e-4	2
53	N27	max	0	2	-.021	2	0	2	0	2	0	2	-1.945e-4	2
54		min	0	2	-.086	2	0	2	0	2	0	2	-3.775e-4	2
55	N28	max	0	2	-.029	2	0	2	0	2	0	2	-1.828e-4	2
56		min	0	2	-.1	2	0	2	0	2	0	2	-3.331e-4	2

Envelope Joint Displacements (Continued)

	Joint		X [in]	LC	Y [in]	LC	Z [in]	LC	X Rotatio...	LC	Y Rotatio...	LC	Z Rotatio...	LC
57	N29	max	0	2	-.041	2	0	2	0	2	0	2	-1.235e-4	2
58		min	0	2	-.121	2	0	2	0	2	0	2	-2.132e-4	2
59	N30	max	0	2	-.049	2	0	2	0	2	0	2	-8.375e-6	2
60		min	0	2	-.13	2	0	2	0	2	0	2	-6.892e-5	2
61	N31	max	0	2	-.051	2	0	2	0	2	0	2	1.425e-4	2
62		min	0	2	-.127	2	0	2	0	2	0	2	1.866e-5	2
63	N32	max	0	2	-.046	2	0	2	0	2	0	2	2.986e-4	2
64		min	0	2	-.11	2	0	2	0	2	0	2	1.028e-4	2
65	N33	max	0	2	-.035	2	0	2	0	2	0	2	4.334e-4	2
66		min	0	2	-.081	2	0	2	0	2	0	2	1.767e-4	2
67	N34	max	0	2	-.019	2	0	2	0	2	0	2	5.259e-4	2
68		min	0	2	-.043	2	0	2	0	2	0	2	2.293e-4	2
69	N35	max	0	2	0	2	0	2	0	2	0	2	5.598e-4	2
70		min	0	2	0	2	0	2	0	2	0	2	2.493e-4	2