PLYMOUTH ER BRS 0149 (5)
CONTRACTOR FABRICATED PRE-CAST

SHEET1:ABUTMENT #1 PLAN
SHEET2:ABUTMENT #2 PLAN
SHEET3:WING WALL FORMING PLAN
SHEET4:CLOSURE POUR FORMING PLAN
SHEET5:APPROACH SLAB PLAN
SHEET6:APPROACH SLAB FORMING PLAN
SHEET7:APPROACH SLAB INSTALLATION /GROUTING PLAN
SHEET8:GENERAL NOTES
SHEET9:QUALITY CONTROL PLAN & PROCEDURES
SHEET10:NPCA TOLERANCES
SHEET11:INSPECTION FORMS
SHEET12:REINFORCING STEEL DRAWINGS

COLD RIVER BRIDGES, LLC
10 LANBRO LANE
WALPOLE, NH
TEL 603-756-9300 FAX 603-756-9303

PLYMOUTH ER BRS 0149 (5)

COVER SHEET/INDEX

SHEET NUMBER: COVER

DATE: 4-16-13 scale:

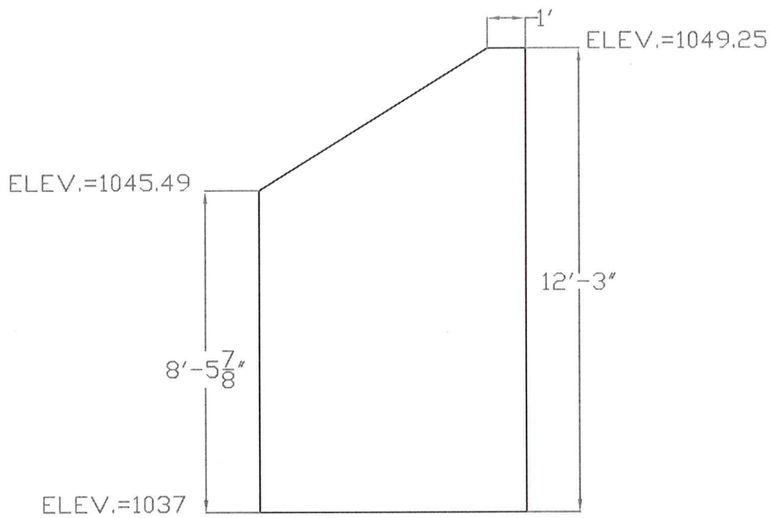

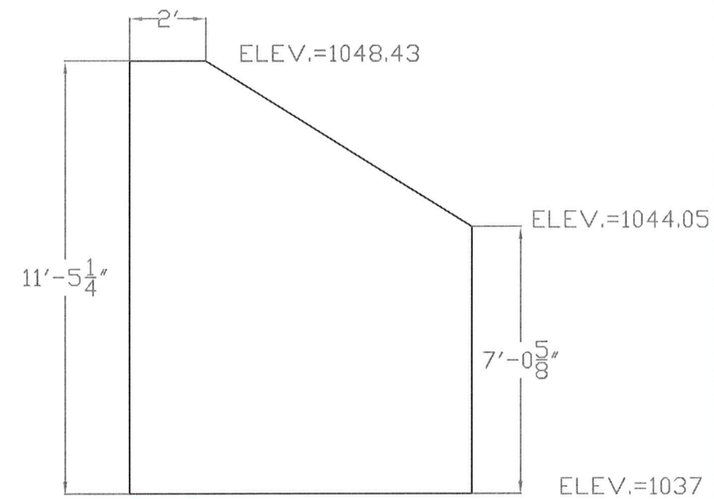

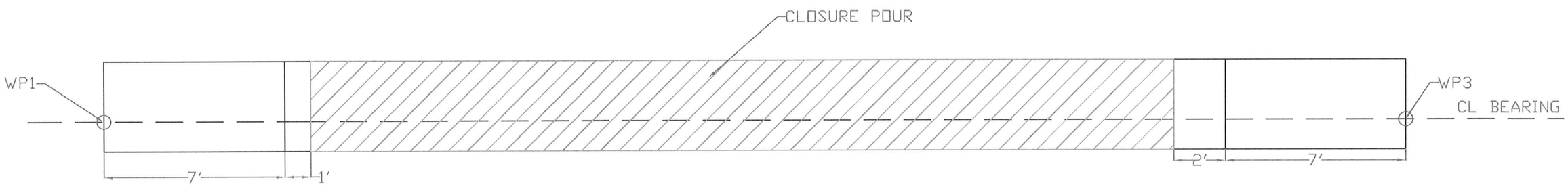

ABUTMENT 1 PLAN&ELEV VIEW

COLD RIVER BRIDGES, LLC
10 LANBRO LANE
WALPOLE, NH
TEL 603-756-9300
FAX 603-756-9303

PLYMOUTH ER BRS 0149 (5)

ABUTMENT 1 PLAN

SHEET NUMBER 1

DATE: 4-16-13

SCALE: 1/4"=1'

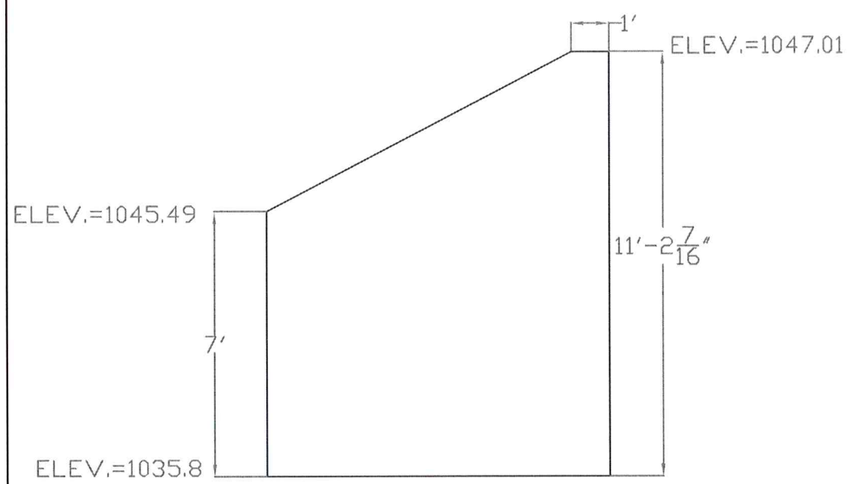

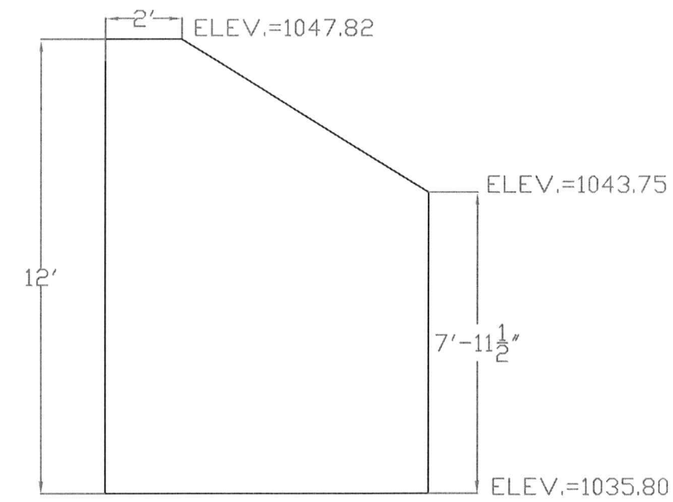

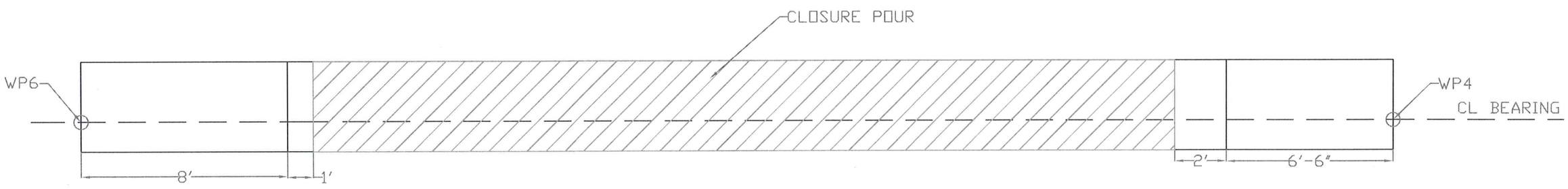

ABUTMENT 2 PLAN&ELEV VIEW

COLD RIVER BRIDGES, LLC
10 LANBRO LANE
WALPOLE, NH
TEL 603-756-9300
FAX 603-756-9303

PLYMOUTH ER BRS 0149 (5)

ABUTMENT 2 PLAN

SHEET NUMBER 2

DATE: 4-16-13

scale: 1/4"=1'

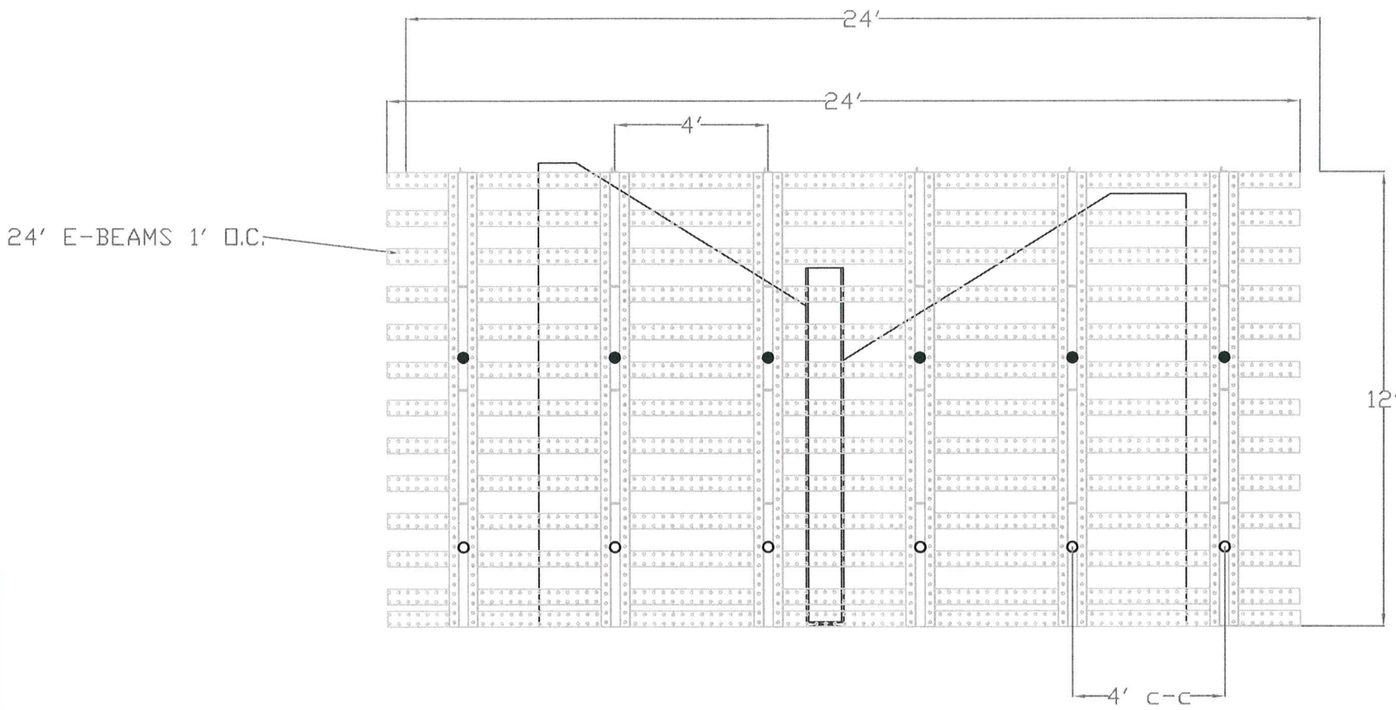

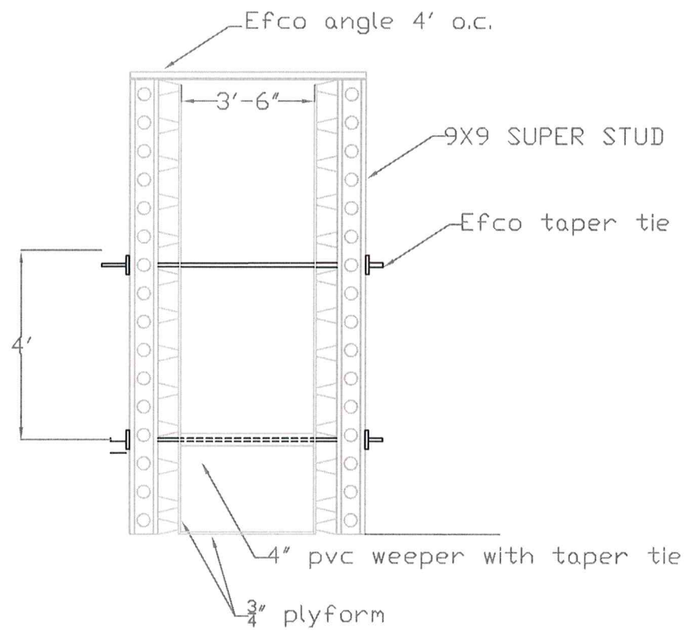

COLD RIVER BRIDGES, LLC
10 LANBRO LANE
WALPOLE, NH
TEL 603-756-9300
FAX 603-756-9303

PLYMOUTH ER BRS 0149 (5)

W.W. FORMING PLAN

SHEET NUMBER 3

DATE: 4-16-13

scale: 1/4"=1'

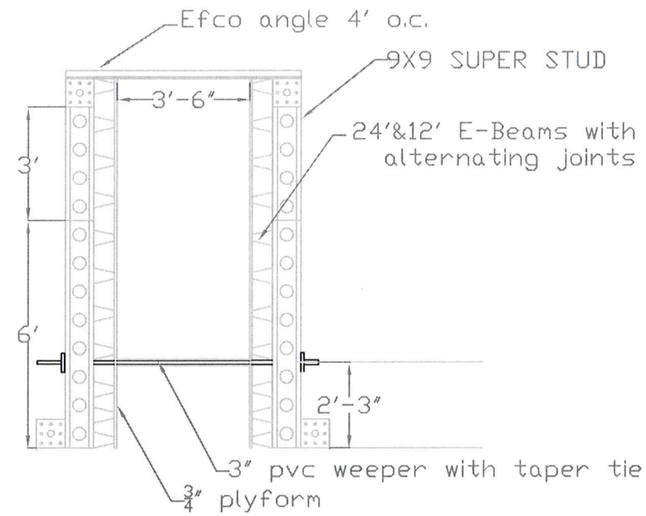

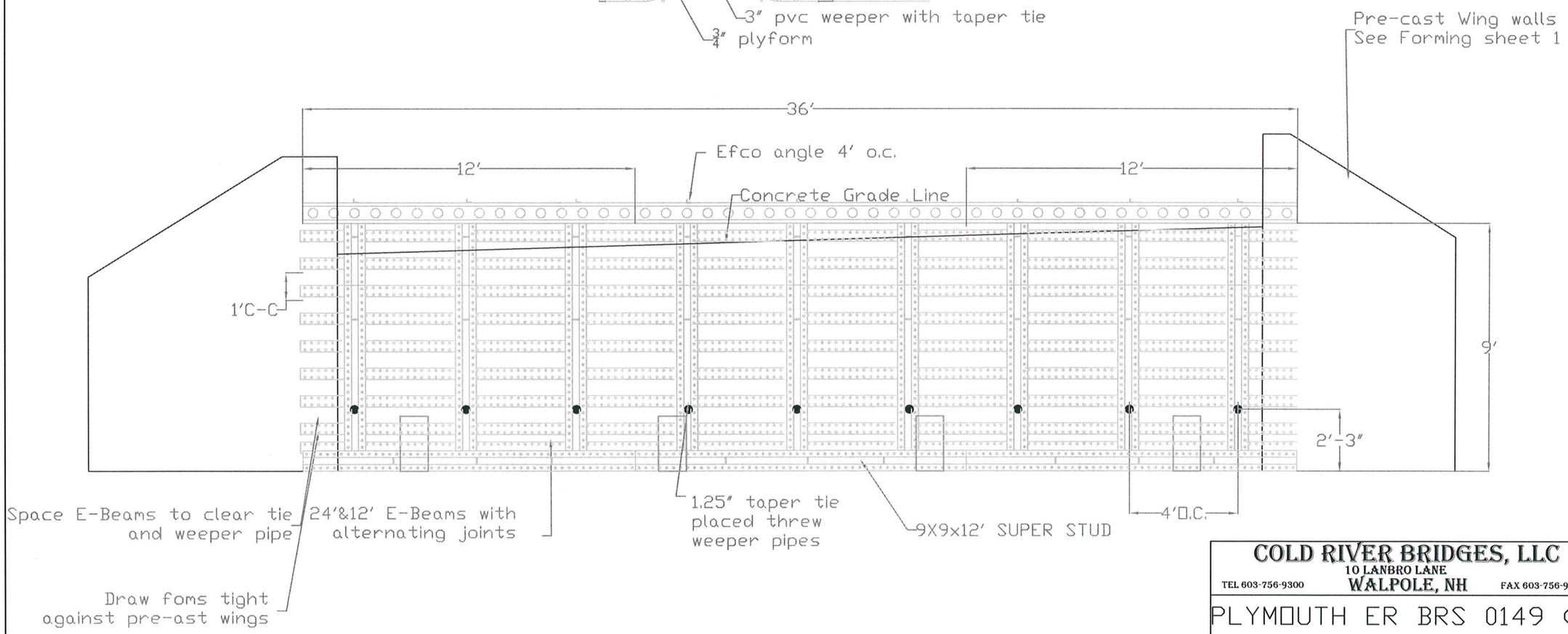

CLOSURE POUR

COLD RIVER BRIDGES, LLC
10 LANBRO LANE
WALPOLE, NH
TEL 603-756-9300
FAX 603-756-9303

PLYMOUTH ER BRS 0149 (5)

CLOSURE POUR FORM PLAN

SHEET NUMBER 4

DATE: 4-16-13

scale: 1/4"=1'

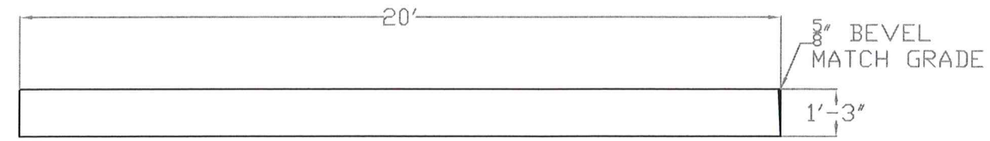

APPROACH SLAB ELEVATION VIEW

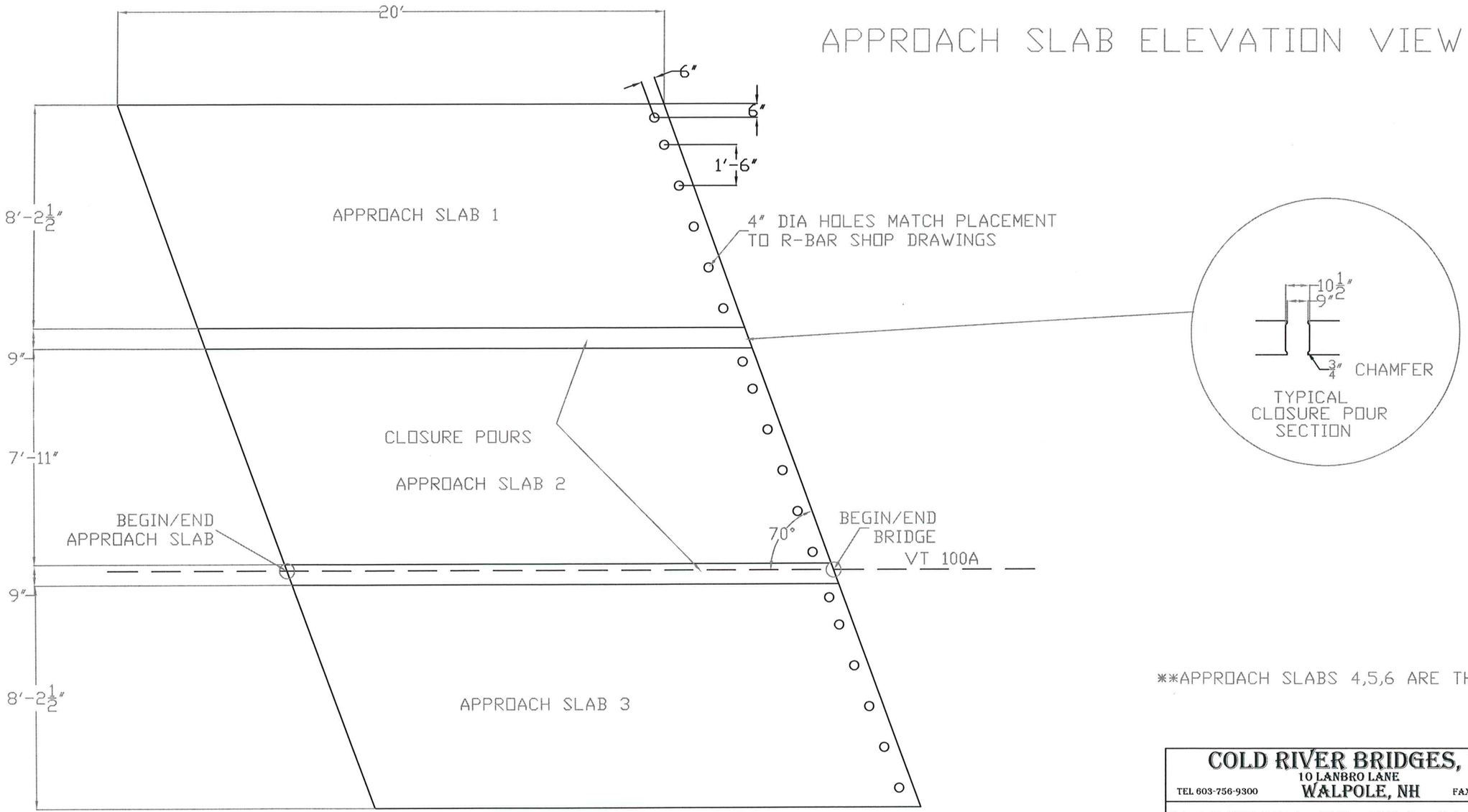

APPROACH SLAB PLAN VIEW

**APPROACH SLABS 4,5,6 ARE THE SAME

COLD RIVER BRIDGES, LLC
10 LANBRO LANE
WALPOLE, NH
TEL 603-756-9300 FAX 603-756-9303

PLYMOUTH ER BRS 0149 (5)

APPROACH SLAB PLAN

SHEET NUMBER 5

DATE: 4-16-13 SCALE: 1/4"=1'

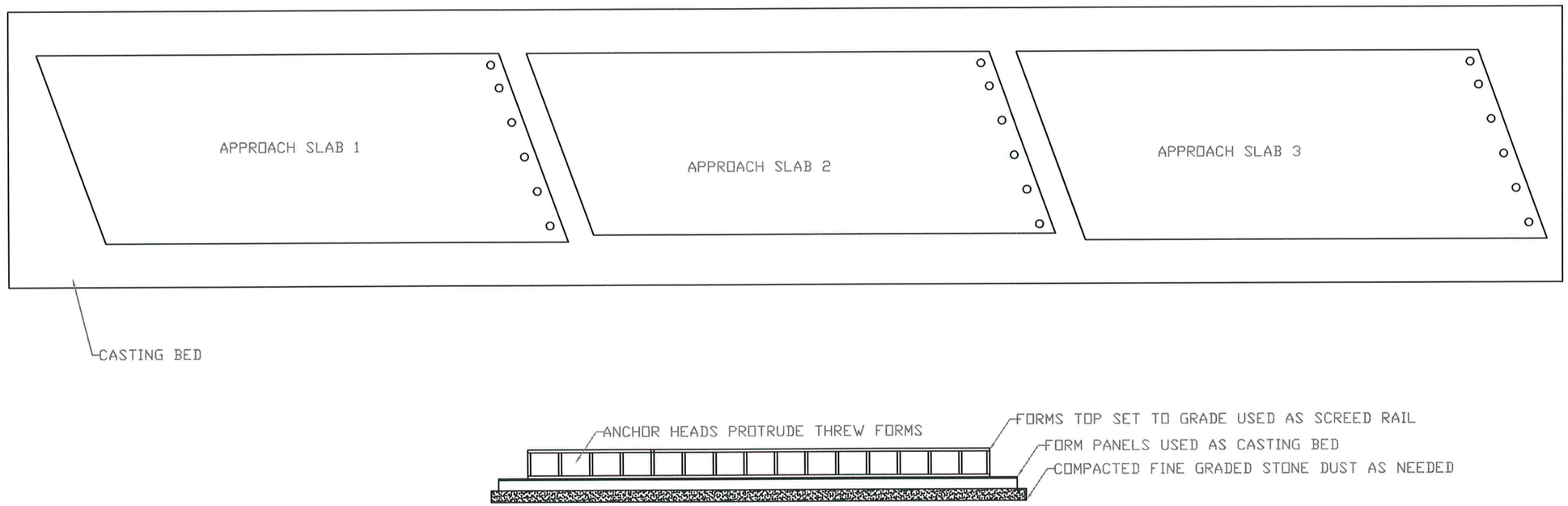

COLD RIVER BRIDGES, LLC
10 LANBRO LANE
WALPOLE, NH
TEL 603-756-9300
FAX 603-756-9303

PLYMOUTH ER BRS 0149 (5)

APPROACH SLAB FORMING PLAN

SHEET NUMBER 6

DATE: 4-16-13

SCALE: 3/16"=1'

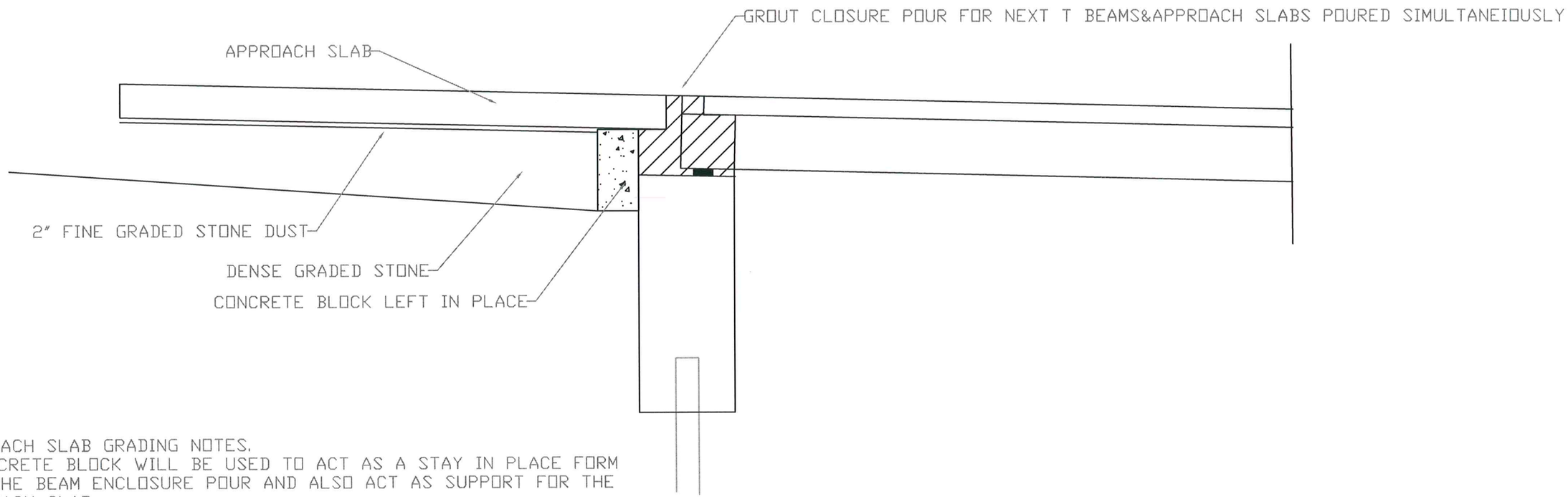

APPROACH SLAB GRADING NOTES.
1 CONCRETE BLOCK WILL BE USED TO ACT AS A STAY IN PLACE FORM FOR THE BEAM ENCLOSURE POUR AND ALSO ACT AS SUPPORT FOR THE APPROACH SLAB.
2. 2" +- OF STONE DUST WILL BE USED TO GRADE THE SUB BASE SO THE APPROACH SLABS HAS ADEQUATE BEARING ON THE GROUND SURFACE.

COLD RIVER BRIDGES, LLC
10 LANBRO LANE
WALPOLE, NH
TEL 603-756-9300 FAX 603-756-9303

PLYMOUTH ER BRS 0149 (5)

APP SLAB INSTALLATION PLAN AND GROUTING PLAN

SHEET NUMBER 7

DATE: 4-16-13 SCALE: 1/4"=1'

CONCRETE NOTES:
CONTRACTOR-FABRICATED PRECAST CONCRETE STRUCTURES.

1.APROACH SLABS- CONCRETE CLASS HPC B

2.WINGWALLS-CONCRETE CLASS HPC A

3.ABUTMENT CLOSURE POUR CONCRETE CLASS HPC B

4.CLOSURE POUR-940LBS/CY NON SHRINK GROUT MIX

5.ALL CONCRETE ABOVE WILL BE SUPPLIED BY CARROLL CONCRETE INC.

6.ALL CONCRETE MIX DESIGNS HAVE OR WILL BE SUBMITTED BY CARROLL CONCRETE INC.

7. APPROACH SLABS SHALL HAVE A FLOATED FINISH PRODUCED BY A VIBRATORY SCREED/A TEXTURED BROOM FINISH IS ALSO AVAILABLE AT THE REQUEST OF VTRANS

8. WINGWALLS AND CLOSURE POUR TOP WILL HAVE A HAND FLOATED FINISHED PRODUCED BY THE USE OF A MAGNESIUM FLOAT.

8. WINGWALLS AND APPROACH SLABS FORM CAN BE REMOVED WHEN THE SPECIFIED CONCRETE HAS REACHED 85% OF ITS DESIGN STRENGTH. WATER CURE WILL CONTINUE BASED ON TABLE 501.17A "CURING CONCRETE COMPONENTS" 7 DAYS OF WATER CURING.

9. ALL EXPOSED CONCRETE EDGES SHALL BE CHAMFERED 3/4"

CONSTRUCTION SEQUENCE:
1. CAST WINGWALLS FOR ABUTMENT # 1
3.CAST WINGWALLS FOR ABUTMENT #2
4.CAST APPROACH SLABS 1-3 AND 4-6
5.SET ABUTMENT #1 WINGWALLS
6. SET PRE-TIED R-BAR CAGE AND GANGED FORMS AND POUR ABUTMENT 1 CLOSURE
7.SET ABUTMENT #1 WINGWALLS
8.SET PRE-TIED R-BAR CAGE AND GANGED FORMS AND POUR ABUTMENT 2 CLOSURE .
9SET NEXT T-BEAMS,SET PRECAST APPROACH SLABS AND GROUT CLOSURE POURS.

COLD RIVER BRIDGES, LLC
10 LANBRO LANE
TEL 603-756-9300 WALPOLE, NH FAX 603-756-9303

PLYMOUTH ER BRS 0149 (5)

GENERAL NOTES

SHEET NUMBER 8

DATE: 4-16-13 scale:

QUALITY CONTROL PROCEDURES.

1.CARROLL CONCRETE WILL BE RESPONSIBLE FOR THE CONTRACTOR./SUPPLIOR QC TESTING DURING CONCRETE POURS.

2.A PRE-PRODUCTION MEETING SHALL BE HELD BETWEEN THE CONTRACTOR AND RESIDENT ENGINEER BEFORE CONCRETE PLACEMENT.

3. VTRANS WILL RETAIN THEIR RESPONSIBILITIES FOR QUALITY ACCEPTANCE TESTING.

4. A MINIMUM OF TWO EXTRA CYLINDERS PER CONCRETE PLACEMENT SHALL BE TAKEN FOR EARLY STRENGTH BREAKS.

5. ALL INSIDE FORM DIMENSION AND R-BAR SPACING AND CLEARANCES SHALL BE REVIEWED AND DOCUMENTED ON THE PRE-POUR INSPECTION SHEET BY THE CONTRACTOR AND THE RESIDENT ENGINEER BEFORE CASTING IS COMMENCED..

6. BEFORE FORMS ARE ERECTED THE CONTRACTOR WILL INSPECT ALL FORM-WORK FOR DAMAGE OR RESIDUAL CONCRETE. ANY DEFICIENCY IN THE FORM WORK SHALL BE CORRECTED BEFORE FORM WORK CONTINUES.

7. FORMS SHALL HAVE A GENEROUS COATING OF FORM OIL APPLIED. . CAUTION WILL BE TAKEN NOT TO HAVE PONDING OF FORM OIL IN THE BASE OF THE FORM OR ON ANY R-BAR.

8. ANY COATING DAMAGED ON THE R-BAR SHALL BE REPAIRED WITH A 2 PART EPOXY TOUCH UP KIT.

9. ALL PRE-CAST WILL BE INSPECTED BY BOTH THE CONTRACTOR AND THE RESIDENT ENGINEER AND DOCUMENTED ON THE POST POUR INSPECTION SHEET. ANY MINOR REPAIRS AND HONEY COMBING OR RUBBING NECESSARY WILL BE COMPLETED USING A SAND AND PORTLAND SLURRY FROM THE SAME SOURCE AS THE CONCRETE. ANY MAJOR REPAIRS WILL BE REPAIRED WITH A VERTICAL OVERHEAD PATCH FROM THE APPROVED PRODUCTS LIST.

10.. CONCRETE TOLERANCES SHALL BE IN ACCORDANCE WITH THE NPCA CONCRETE TOLERANCES.

11. EACH PIECE OF PRE-CAST SHALL BE MARKED WITH ITS UNIT NUMBER AND DATE OF CASTING.

COLD RIVER BRIDGES, LLC
10 LANBRO LANE
WALPOLE, NH
TEL 603-756-9300 FAX 603-756-9303

PLYMOUTH ER BRS 0149 (5)

QC PROCEDURES/PLAN

SHEET NUMBER 9

DATE: 4-16-13 SCALE:

Prestressed Concrete Tolerances

I. Fabrication tolerances in linear elements except piles (Beams, girders, columns, joists and similar members)

A. Length of member

Per 10 foot of length ..... 1/8 in
Total not more than ..... 3/4 in

B. Cross-sectional dimensions

6 in. or less ..... 1/8 in
Over 6 in. but not over 18 in ..... 3/16 in
Over 18 in. but not over 36 in ..... 1/4 in
Over 36 in ..... 3/8 in

C. Lateral alignment (Sweep) of noncambered member of surfaces as measured relative to the centerline of member

Member length
40 ft and less ..... 1/4 in
Over 40 foot but not over 60 ft ..... 3/8 in
Over 60 foot ..... 1/2 in

D. Camber variation from design chamber, at time of erection

1/4 in. per 10 foot of length but not more than ..... 1 in

E. Surface irregularities, deviation from a 10 ft straightedge...

For elements which will not receive topping ..... 1/4 in
For elements to receive topping ..... 1/2 in
For elements to be used as concrete guideways support and steering surfaces ..... 1/8 in

II. Fabrication tolerances for piles

A. Length ..... +6 in
..... -2 in

B. Cross-sectional dimensions

Overall ..... 3/8 in
Wall thickness of hollow sections ..... +1/2 in
..... -0 in

C. Lateral alignment of pile surfaces relative to pile centerline

in length of pile, per 10 foot ..... 1/8 in

D. Location of internal void ..... 3/8 in

E. Pile head

From the plane perpendicular to the longitudinal axis of pile, 1/4 in. in 12 in. but not more than ..... 1/2 in

F. Surface irregularities

Pile head ..... 1/8 in
Other surfaces, deviation from a 10 foot straightedge .. 1/4 in

III. Fabrication tolerances in planar elements (Wall and floor panels, tees and similar members)

A. Length and width

10 foot or less ..... 1/8 in
Over 10 ft but no over 20 foot ..... +1/8 in
..... -3/16 in
Over 20 ft but not over 40 foot ..... 1/4 in
Each additional 10 foot increment in excess of 40 foot. 1/16 in
Difference in length of the two diagonals, of a rectangular member the greater of 1/8 in. per 6 foot or diagonal or . 1/2 in

B. Cross-sectional dimensions

Thickness ..... +1/4 in
..... -1/8 in

C. Openings in panels

Size of opening ..... 1/4 in
Location referenced to centerline of opening ..... 1/4 in

D. Lateral alignment of embedded items

Reglets for glazing gaskets ..... 1/8 in
Bolts ..... 1/4 in
Flashing reglets ..... 1/4 in
Flashing reglets at panel edge ..... 1/8 in
Electrical penetrations and pipe sleeves ..... 1/2 in
Weld plates ..... 1 in
Inserts ..... 1/2 in

E. Bowing and warping at time of erection

Bowing
1/360 times the panel diagonal dimension (in inches) but not more than ..... 1 in.
Warping
1/16 in. per foot of distance from the nearest adjacent corner but not more than ..... 1 in.

Reprinted with permission from the American Concrete Institute (ACI) (www.concrete.org)

NPCA
Precast ... The Concrete Solution

COLD RIVER BRIDGES, LLC
10 LANBRO LANE
WALPOLE, NH
TEL 603-756-9300 FAX 603-756-9303

PLYMOUTH ER BRS 0149 (5)

NPCA TOLLERANCES

SHEET NUMBER 10

DATE: 4-16-13 scale:

QMF-005, Rev. 1, 02-07-12 (9.0)

POST-POUR INSPECTION REPORT

QUALITY CONTROL DEPARTMENT

PRODUCT: Job #	Sun	Mon	Tues	Wed	Thurs	Fri	Sat
Casting Date							
Inspection Date							
Mark Number							
Stripping Strength							
Top Finish							
Bottom Finish							
Surface Texture							
As Cast Length (ft/in)							
As Cast Width (ft/in)							
As Cast Depth (ft/in)							
Cracks							
Spalls							
Squareness							
Chamfers							
Honeycomb / Grout Leak							
Bowing							
Exposed Reinforcement							
Exposed Chairs							
Plates and Inserts							
Chamfer & Radius Quality							
Openings / Blockouts							
Lifting Devices							

REMARKS: _____

Inspector _____ **Date** _____ **QC Supervisor** _____

QMF-003, Rev. 1, 02-07-12 (9.0)

PRE-POUR INSPECTION REPORT

QUALITY CONTROL DEPARTMENT

PRODUCT: Job #	Sun	Mon	Tues	Wed	Thurs	Fri	Sat
Casting Date							
Form Condition							
Form Cleanliness							
Form Joints							
Release Agent/Retarder							
Design Length (ft/in)							
Set-Up Length (ft/in)							
Design Width (ft/in)							
Set-Up Width (ft/in)							
Design Depth (ft/in)							
Set-Up Depth (ft/in)							
Blockouts							
Squareness							
End and Edge Details							
Reinforcing Steel							
Size of Reinforcing							
Spacing of Reinforcing							
Corrosion							
Reinf. Cleanliness							
Plates and Inserts							
Lifting Devices							
Top Finish (wet)							

* All applicable boxes should have a S=Satisfactory or D=Deficiency

REMARKS: _____

QC Supervisor _____ **Date** _____ **Inspector** _____

COLD RIVER BRIDGES, LLC
10 LANBRO LANE
WALPOLE, NH
TEL 603-756-9300 FAX 603-756-9303

PLYMOUTH ER BRS 0149 (5)

INSPECTION FORMS

SHEET NUMBER 11

DATE: 4-16-13 SCALE:

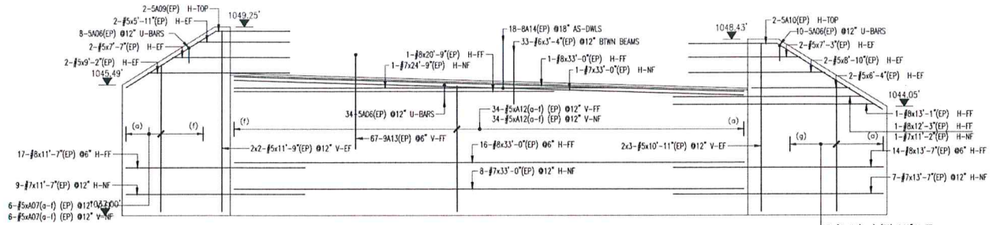

ABUTMENT 1 REINFORCEMENT ELEVATION

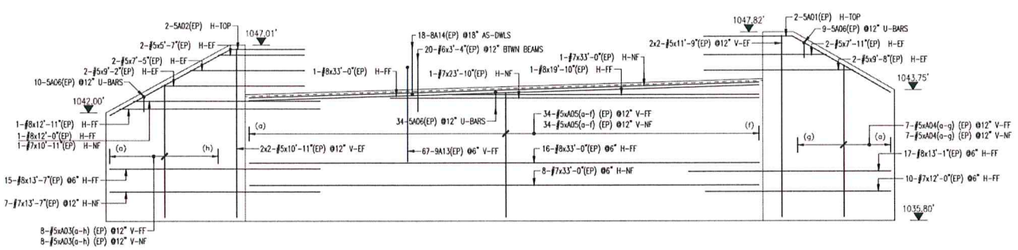

ABUTMENT 2 REINFORCEMENT ELEVATION

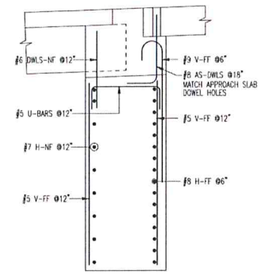

TYPICAL ABUTMENT SECTION

ABUTMENT "1" AS SHOWN
ABUTMENT "2" OPP. HAND

SEE CONTRACT LIST AND SECTIONS FOR CLOSURE POUR AND TRANSITION BARRIERS REINFORCEMENT AND PLACING

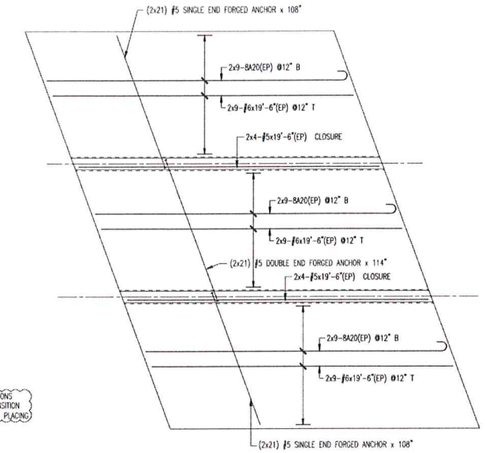

ABUTMENT 2 APPROACH SLAB REINFORCEMENT-A.S.
ABUTMENT 1 APPROACH SLAB REINFORCEMENT-O.H.

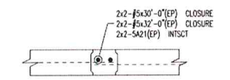

CLOSURE STRIPS IN DECK SLAB

(2) REQUIRED

BAR LIST

Drawing Sheet : R01

Bar Mark	Qty	Size	Total Length	Type	X	Y	Z	V	U	T	S	R	Q	P	O	N
A06a	2	#5	6'-8"			6'-8"										
A06b	2	#5	10'-6"			10'-6"										
First and Last Bar in Very Group Shown Only																
A04g	2	#5	8'-1"			8'-1"										
A04j	2	#5	11'-7"			11'-7"										
First and Last Bar in Very Group Shown Only																
A05e	12	#5	7'-7"			7'-7"										
A05f	8	#5	8'-6"			8'-6"										
First and Last Bar in Very Group Shown Only																
A07e	2	#5	8'-1"			8'-1"										
A07f	2	#5	11'-3"			11'-3"										
First and Last Bar in Very Group Shown Only																
A11e	2	#5	6'-8"			6'-8"										
A11g	2	#5	10'-5"			10'-5"										
First and Last Bar in Very Group Shown Only																
A12e	12	#5	7'-8"			7'-8"										
A12f	8	#5	8'-6"			8'-6"										
First and Last Bar in Very Group Shown Only																
5A01	2	#5	12'-11"	3		5'-9 X"	7'-3 X"					5'-8 X"		6'-3 X"	12'-4"	
5A02	2	#5	12'-8"	3		4'-9 X"	8'-11"					4'-4"		7'-9 X"	12'-8 X"	
5A06	106	#5	5'-0"	17		1'-0"	3'-0"	1'-0"								
5A09	2	#5	11'-3 X"	3		4'-9 X"	6'-10 X"					5'-8 X"		5'-9 X"	10'-4 X"	
5A10	2	#5	13'-8 X"	3		5'-9 X"	8'-4"					4'-4"		6'-9 X"	12'-8 X"	
8A14	36	#8	4'-4"	2	1'-4"	3'-0"										
9A13	134	#9	7'-5"	1	1'-7"	6'-1"							11 X"			
9A00	54	#9	20'-5"	1	11"	19'-6"							8"			
5A21	4	#5	5'-10"	2	10"	5'-0"										

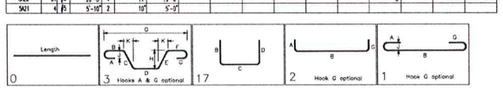

No.	Description	Date	By
1	APPROVAL PRINT	04/24/13	CPS

Revisions and Issue Record

The full intent and purpose of this drawing is the placing of reinforcing steel bars ONLY. It is NOT to be used as a means of communication between the Architect, Engineer, Contractor or any other Sub-trades.

THIS DRAWING IS NOT TO BE SCALED.

HarrisRebar Boston Steel
National Strength. Local Service.

DETAILED AT:
CANAAN
NEW HAMPSHIRE

Project: PLYMOUTH ER BRS 0149(5)
PLYMOUTH VT

COLD RIVER BRIDGES, LLC
10 LAMBO LANE
WALPOLE, NH
TEL 603-756-9300 FAX 603-756-9303

PLYMOUTH ER BRS 0149 (5)

REINFORCING DRAWINGS

DATE: 4-18-13 SCALE:

SHEET NUMBER 12

Drawing: BRIDGE ABUTMENT REINFORCEMENT
Customer: COLD RIVER BRIDGES
Engineer: T-Y-LIN INTERNATIONAL
Refer to Release:

Date	Drawn	Chkd.	JOB No.	Dwg. No.
04/23/13	CPS		10049702	R01

W:\samples\Projects\10049702\Placing Drawings\DWGs\R01.dwg