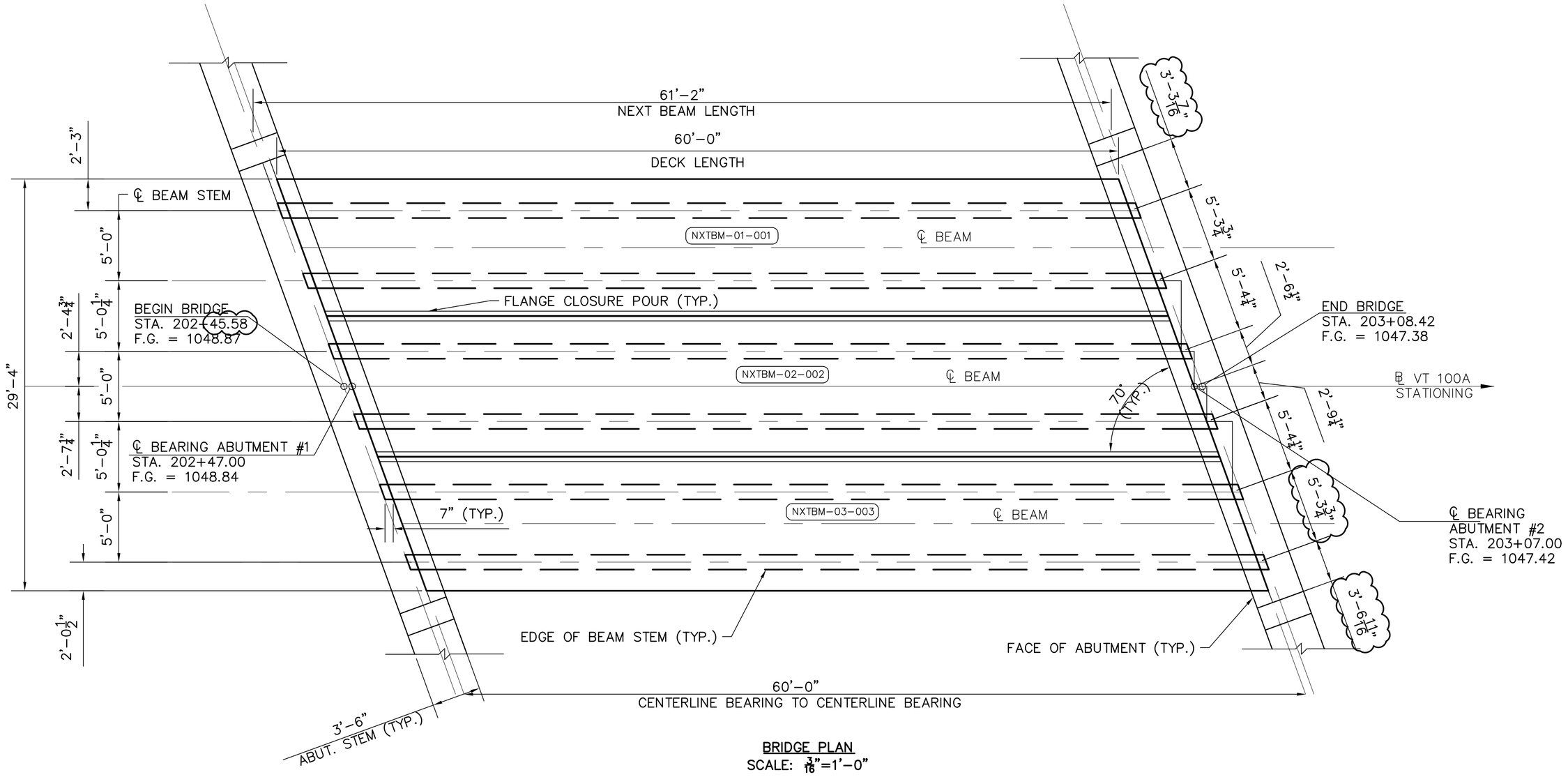

BRIDGE PLAN
SCALE: $\frac{3}{16}$"=1'-0"

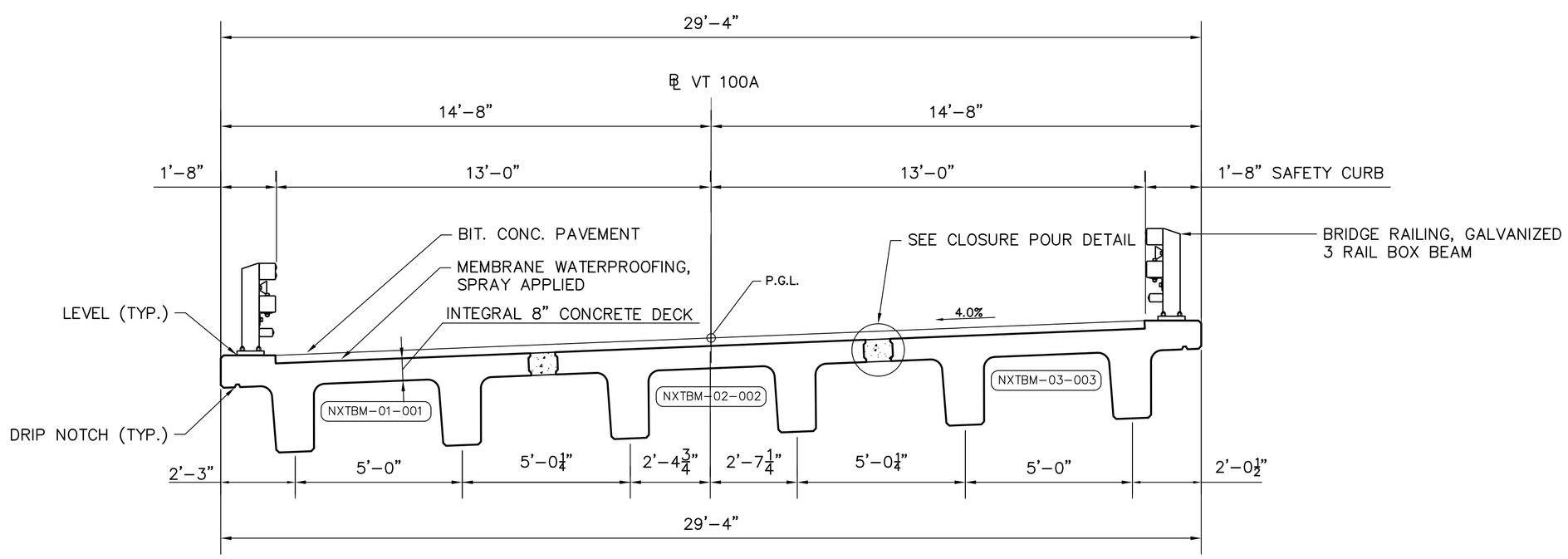

BRIDGE TYPICAL SECTION
SCALE: $\frac{3}{8}$" = 1'-0"

NOTES:

1. SHOP DRAWINGS WERE DEVELOPED USING THE FOLLOWING RESOURCES FOR THE CONTRACT: VT100A REPLACEMENT OF BRIDGE OVER PINNEY HOLLOW BROOK, PLYMOUTH, VT. BRIDGE NO. 47 PREPARED BY TYLIN. PROJECT NO ER BRS 0149(5)
2. IF THERE IS ADDITIONAL INFORMATION PERTINENT TO THE FABRICATION AND INSTALLATION OF THESE UNITS THAT IS NOT CONTAINED WITHIN THE RESOURCES LISTED ABOVE, IT SHALL BE BROUGHT TO THE ATTENTION OF DAILEY PRECAST LLC. AND EIV TECHNICAL SERVICES OF ALL LIABILITIES ARISING FROM ERRORS OR OMISSIONS RELATED TO THE OMITTED INFORMATION.
3. VOIDS AT LIFTER POCKETS SHALL BE FILLED WITH APPROVED NON-SHRINK GROUT ONCE BEAMS ARE IN PLACE. (NOT BY DP)
4. TOLERANCES SHALL BE IN ACCORDANCE WITH PCI TOLERANCE MANUALS (MNL-135 & MNL-116)

CONSTRUCTION SET DATE: 06/28/2013

SHEET NAME: ERECTION PLAN

REVISION NO.	REVISION DATE

Dailey PRECAST
WILLIAM E. DAILEY PRECAST, LLC
295 AIRPORT ROAD
SHAFTSBURY, VT 05262
TEL: 802.442.4418 FAX: 802.442.0738

STATE OF VERMONT
CHARLES H. SWAINS
No. 8126
Structural
LICENSED
PROFESSIONAL ENGINEER

EIV TECHNICAL SERVICES
55 LEROY ROAD, WILLISTON, VT 05495
TEL: (802) 497-3653 FAX: (802) 497-3656

DATE: JUNE 2013 PROJECT # E1729
DRAWN BY: LKW/CN CHECKED BY: CHS

STATE OF VERMONT AGENCY OF TRANSPORTAION

PLYMOUTH, VERMONT
PROJECT NO: ER BRS 0149(5)

NOTES:

(1) NXTBM–01 REQUIRED

FINISHES

TOP:	BROOM ($\frac{1}{8}$" AMP MAX.)
SIDES:	STEEL FORM
BOTTOM:	STEEL FORM
ENDS:	FORM

BEAMS SHALL BE HANDLED AND ERECTED USING LIFTERS ONLY. THE MINIMUM SLING ANGLE FOR SHOP PICKING SHALL BE 90° FROM THE HORIZONTAL. BEAMS SHALL BE STORED AND TRANSPORTED WITH TIMBER SUPPORTS LOCATED BELOW THE LIFTERS U.O.N.

WIPE CLEAN CURB REINF. PRIOR TO FINISHING BEAM TOP.

RAIL POST ANCHOR SHALL BE PROTECTED FROM CONCRETE ABOVE FINISHED CURB.

BEAM WEIGHT: 104,866 LBS

BILL OF MATERIALS

MARK	NXTBM-01		QTY =	1
fc'=	8,000 PSI	@ 28 DAYS	fci' =	6,000 PSI
PART MARK	**DESCRIPTION**		**QTY**	**TOTAL QTY**
M1	MB RL-23 (79172) GALV.		4	4
M2	MB RL-45 (79166)		4	4
M3	DS F-64 FERRULE LOOP GALV.		16	16
M4	DS D-112 #9 A=5'-4" EPOXY		40	40
M7	P900 NXTBM END ASSEMBLY		4	4
M8	RAIL ASSEMBLY		7	7
	25.89 CY VT MIX ID # 53		1	1
	0.6" 7WS LR = 2348'-4"		1	1
INSTALL AFTER REMOVED FROM FORM				
M5	DS D-110 #9 (111520) EPOXY		40	40
M6	DS D-102 #9 EPOXY A=8" B=2'-3"		40	40

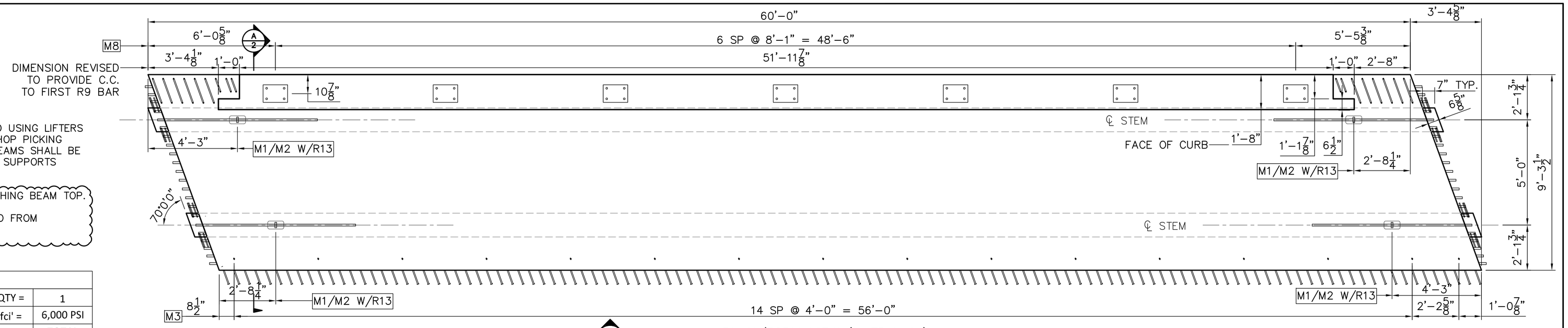

PLAN/FORM VIEW (NXTBM–01)
SCALE: 3/8" = 1'–0"

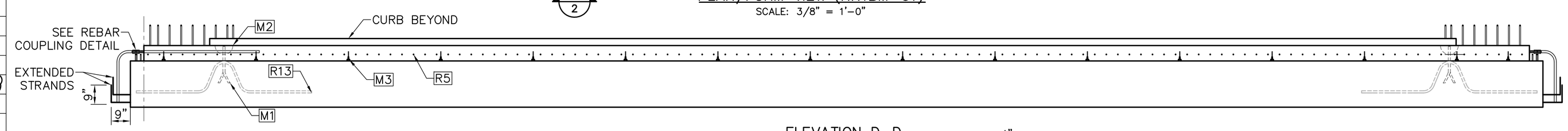

ELEVATION D–D
SCALE: 3/8" = 1'–0"

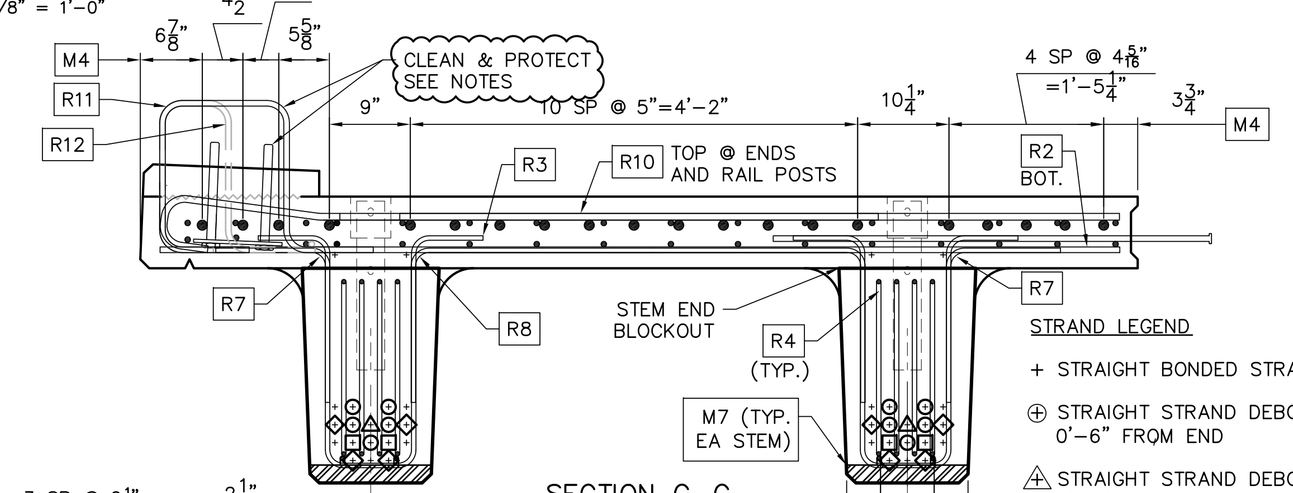

SECTION C–C
SCALE: 1" = 1'–0"

STRAND LEGEND

- + STRAIGHT BONDED STRAND
- ⊕ STRAIGHT STRAND DEBOND 0'–6" FROM END
- ⊕ STRAIGHT STRAND DEBOND 8'–0" FROM END
- ⊕ STRAIGHT STRAND DEBOND 12'–0" FROM END
- ⊕ EXTEND 18" OUT OF BEAM (90° BEND @ 9" OUT)

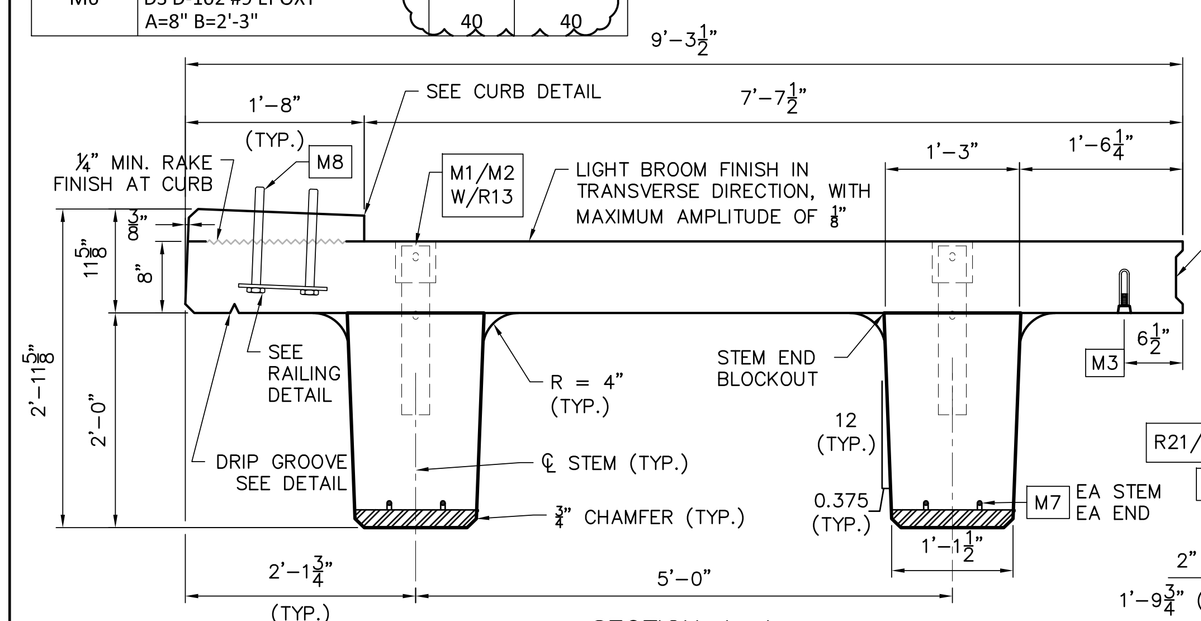

SECTION A–A
SCALE: 1" = 1'–0"

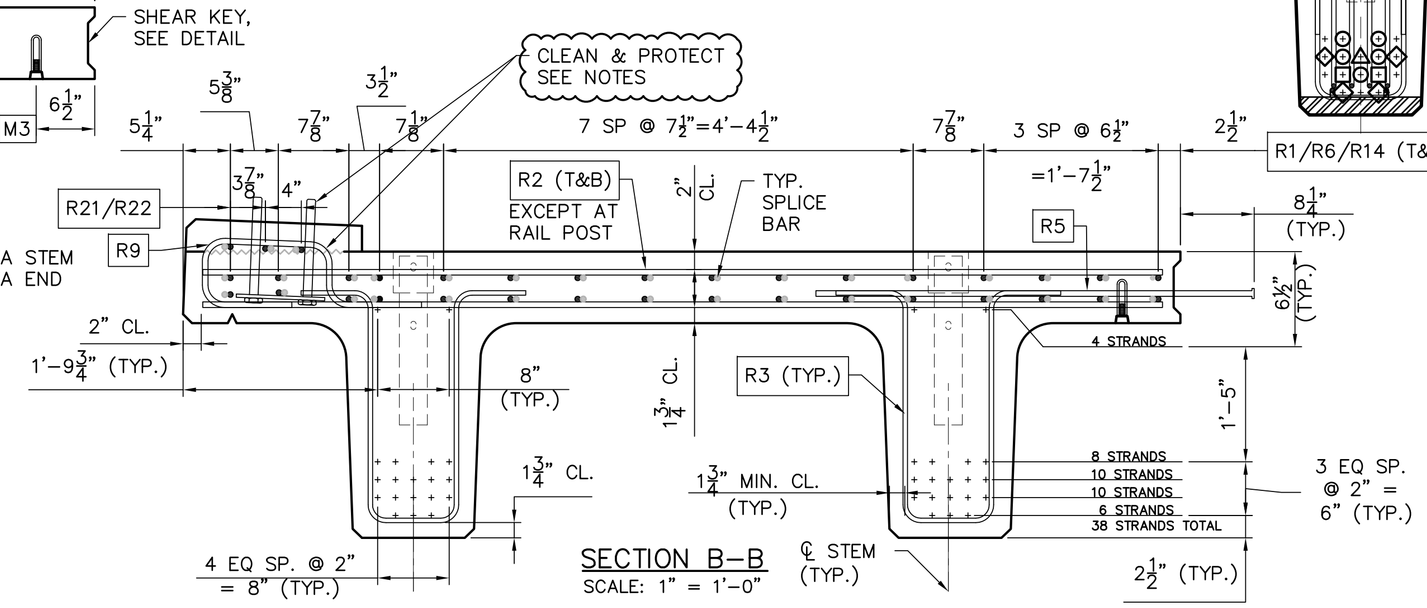

SECTION B–B
SCALE: 1" = 1'–0"

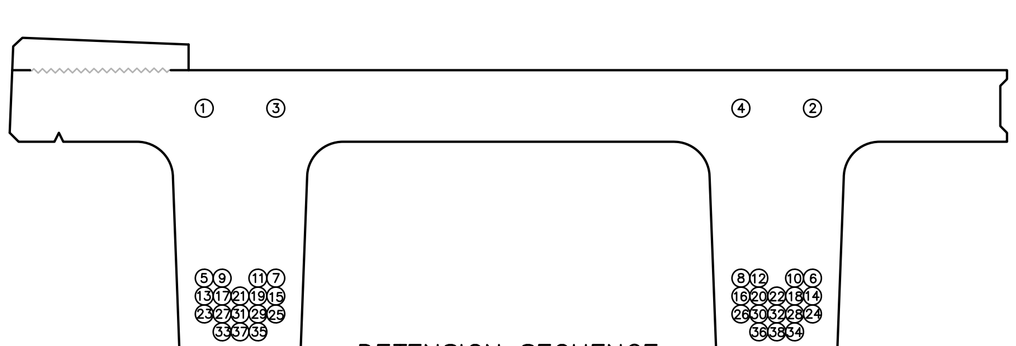

DETENSION SEQUENCE
NOTE: EXTEND STRANDS #13–#16 & #33–#36 BY 1'–6"

CONSTRUCTION SET DATE: 06/28/2013

SHEET NAME: NXTBM–01 PLAN

REVISION NO.	REVISION DATE

Dailey PRECAST
WILLIAM E. DAILEY PRECAST, LLC
295 AIRPORT ROAD
SHAFTSBURY, VT 05262
TEL: 802.442.4418 FAX: 802.442.0738

STATE OF VERMONT — CHARLES H. SWANSON — No. 8126 — Structural — LICENSED PROFESSIONAL ENGINEER

EIV TECHNICAL SERVICES
55 LEROY ROAD, WILLISTON, VT 05495
TEL: (802) 497-3653 FAX: (802) 497-3656

DATE: JUNE 2013 PROJECT # E1729
DRAWN BY: LKW/CN CHECKED BY: CHS

STATE OF VERMONT AGENCY OF TRANSPORTAION

PLYMOUTH, VERMONT
PROJECT NO: ER BRS 0149(5)

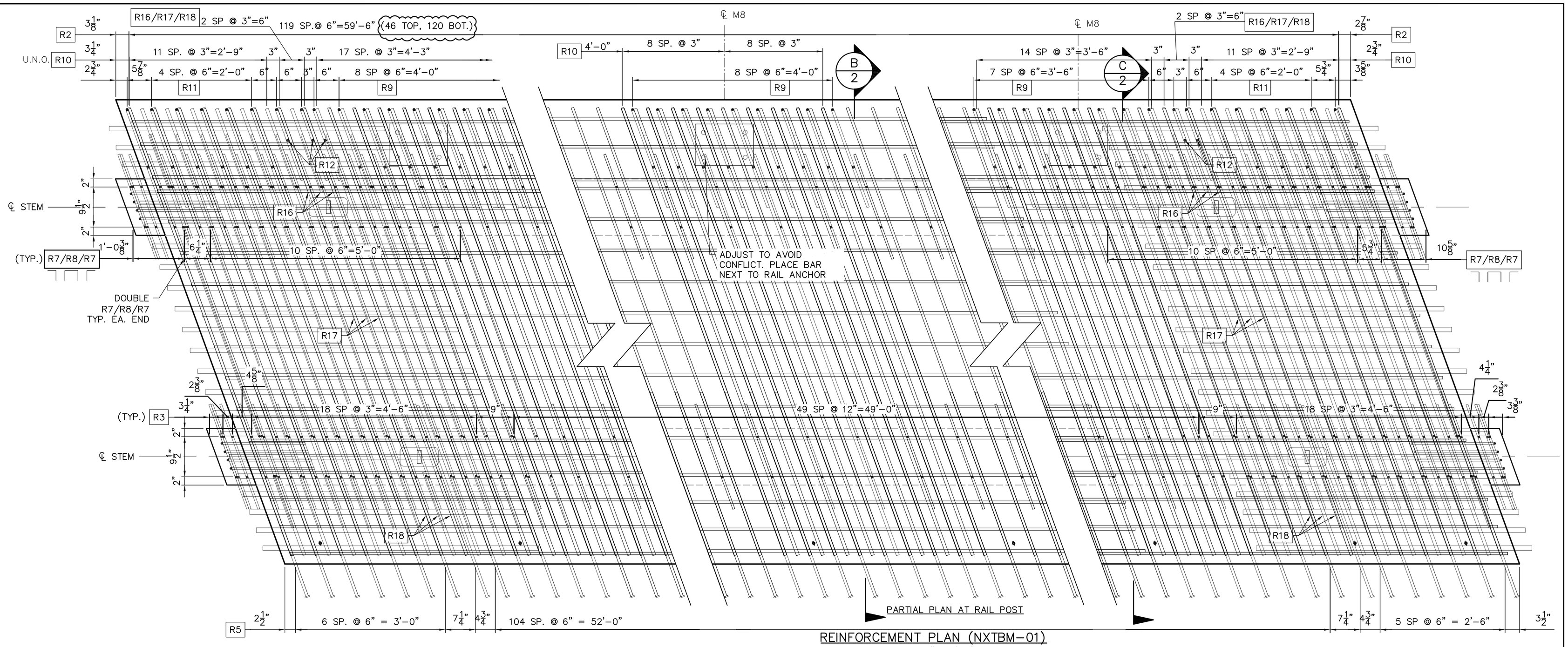

REINFORCEMENT PLAN (NXTBM–01)

SCALE: 1" = 1'–0"

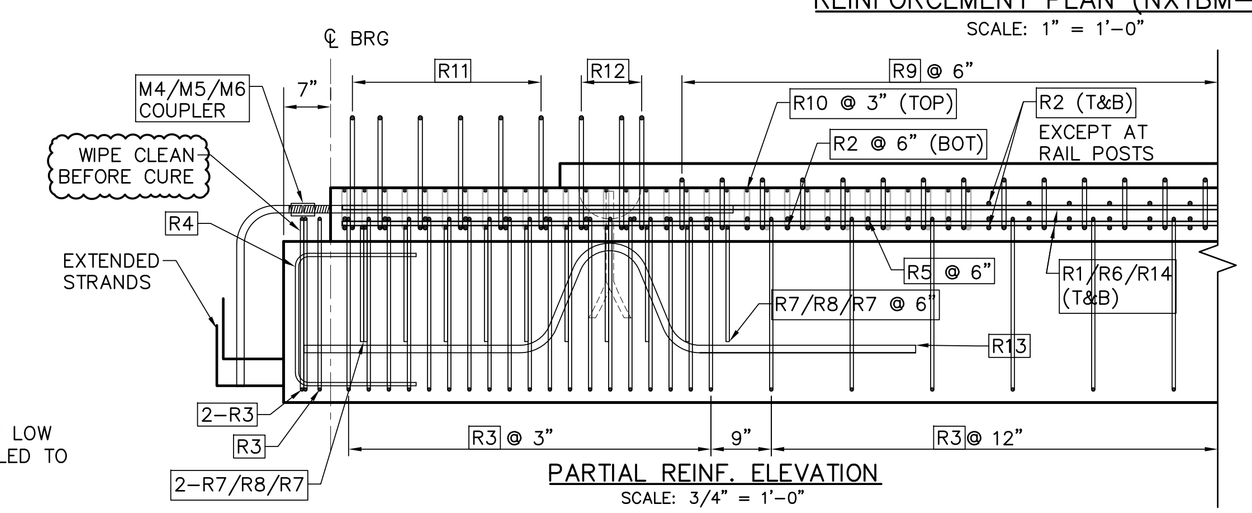

PARTIAL REINF. ELEVATION

SCALE: 3/4" = 1'–0"

REINFORCEMENT CHART

DESCRIPTION						QTY
BAR MARK	BAR SIZE	COATING	BENT/ STRAIGHT	LENGTH		
R1	5	E	STRAIGHT	20'-	0.00"	32
R2	5	E	STRAIGHT	9'-	6.38"	166
R3	4	E	BENT	6'-	6.63"	188
R4	4	E	BENT	4'-	7.50"	16
R5	5	E	HEADED	4'-	4.375"	120
R6	5	E	STRAIGHT	35'-	2.00"	32
R7	4	E	BENT	2'-	6.38"	52
R8	4	E	BENT	7'-	4.50"	26
R9	5	E	BENT	3'-	10.25"	62
R10	6	E	BENT	9'-	11.75"	142
R11	5	E	BENT	5'-	4.63"	12
R12	5	E	BENT	4'-	11.63"	5
R13	9	E	BENT	9'-	0.00"	4
R14	5	E	STRAIGHT	10'-	0.00"	32
R16	6	E	BENT	2'-	7.38"	6
R17	6	E	STRAIGHT	4'-	8.25"	6
R18	6	E	STRAIGHT	1'-	9.25"	6
R21	5	E	STRAIGHT	40'-	0.00"	3
R22	5	E	STRAIGHT	15'-	0.00"	3

NOTES:

STRANDS SHALL BE 270 KSI 0.6" ø LOW RELAXATION STRAIGHT STRAND PULLED TO 44 KIPS.

EACH STRAND SHALL BE FINALLY BURNED OR CUT OFF AT A DEPTH OF 1/2" INTO THE END OF THE BEAM AND THE RECESSED AREA AROUND THE STRAND SHALL BE FILLED WITH NON–SHRINK GROUT, EXCEPT AS NOTED.

STAGGER SPLICES OF R1\R6\R14 OR R21/R22 BARS BY 5'–0" MIN.

MIN LAP LENGTH OF R1\R6\R14 OR R21/R22 BARS IS 2'–9" MIN.

CONSTRUCTION SET DATE: 06/28/2013

SHEET NAME: NXTBM–01 REINFORCEMENT PLAN

REVISION NO.	REVISION DATE

Dailey PRECAST

WILLIAM E. DAILEY PRECAST, LLC
295 AIRPORT ROAD
SHAFTSBURY, VT 05262
TEL: 802.442.4418 FAX: 802.442.0738

STATE OF VERMONT
CHARLES H. SWANSON
No. 8126
Structural
LICENSED PROFESSIONAL ENGINEER

EIV TECHNICAL SERVICES
55 LEROY ROAD, WILLISTON, VT 05495
TEL: (802) 497-3653 FAX: (802) 497-3656

DATE: JUNE 2013 PROJECT # E1729

DRAWN BY: LKW/CN CHECKED BY: CHS

STATE OF VERMONT AGENCY OF TRANSPORTAION

PLYMOUTH, VERMONT

PROJECT NO: ER BRS 0149(5)

NOTES:

(1) NXTBM–02 REQUIRED

FINISHES

TOP:	BROOM ($\frac{1}{8}$" AMP MAX.)
SIDES:	STEEL FORM
BOTTOM:	STEEL FORM
ENDS:	FORM

BEAMS SHALL BE HANDLED AND ERECTED USING LIFTERS ONLY. THE MINIMUM SLING ANGLE FOR SHOP PICKING SHALL BE 90° FROM THE HORIZONTAL. BEAMS SHALL BE STORED AND TRANSPORTED WITH TIMBER SUPPORTS LOCATED BELOW THE LIFTERS U.O.N.

BEAM WEIGHT: 100,645 LBS

BILL OF MATERIALS

MARK	NXTBM-02		QTY =	1
fc'=	8,000 PSI	@ 28 DAYS	fci' =	6,000 PSI
PART MARK	**DESCRIPTION**		**QTY**	**TOTAL QTY**
M1	MB RL-23 (79172) GALV.		4	4
M2	MB RL-45 (79166)		4	4
M3	DS F-64 FERRULE LOOP GALV.		32	32
M4	DS D-112 #9 A=5'-4" EPOXY		40	40
M7	P900 NXTBM END ASSEMBLY		4	4
	24.85 CY VT MIX ID # 53		1	1
	0.6" 7WS LR = 2348'-4"		1	1
INSTALL AFTER REMOVED FROM FORM				
M5	DS D-110 #9 (111520) EPOXY		40	40
M6	DS D-102 #9 EPOXY A=8" B=2'-3"		40	40

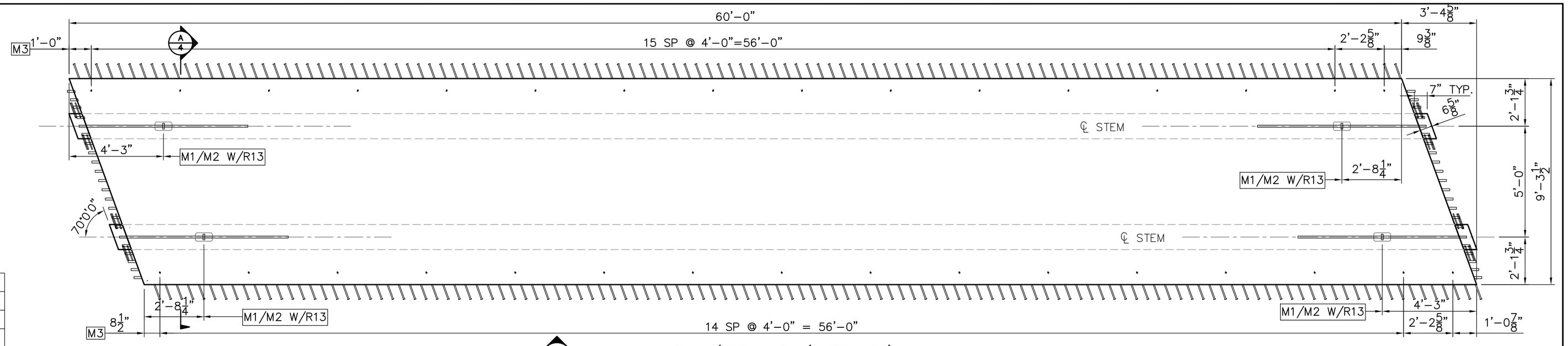

PLAN/FORM VIEW (NXTBM–02)
SCALE: 3/8" = 1'–0"

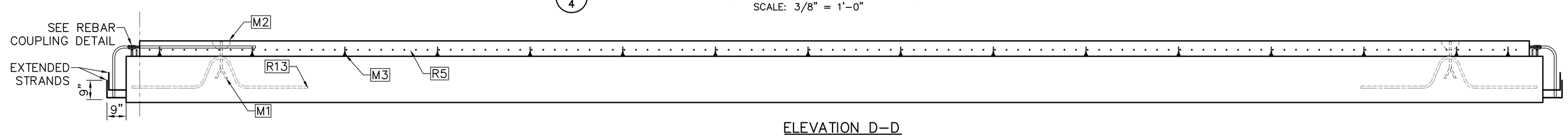

ELEVATION D–D
SCALE: 3/8" = 1'–0"

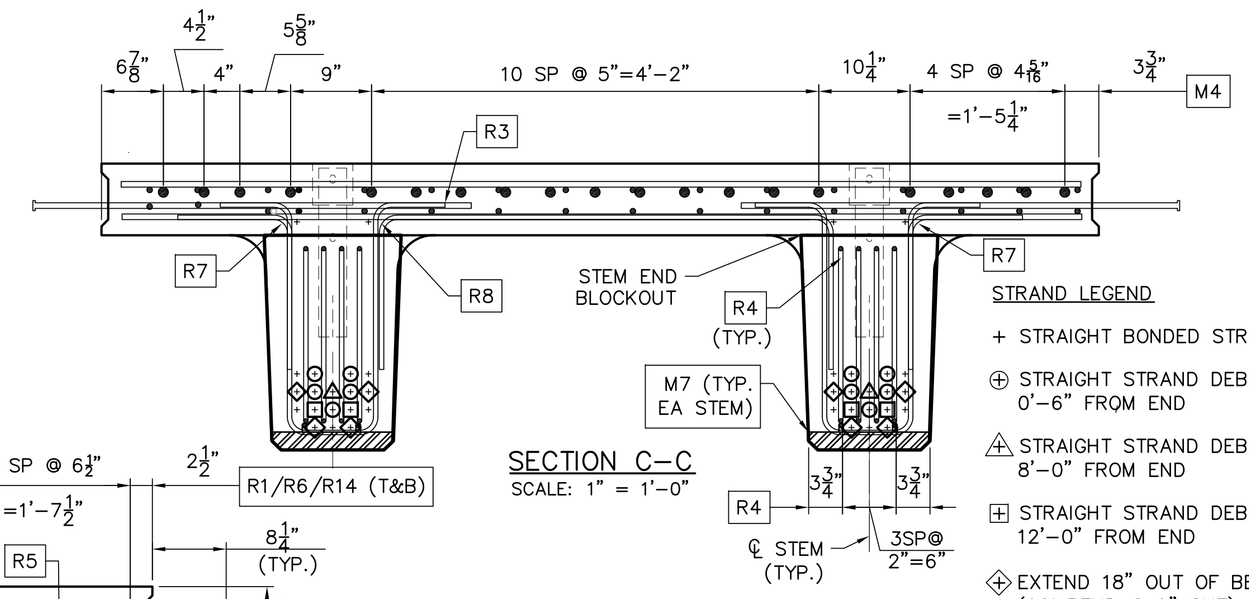

SECTION C–C
SCALE: 1" = 1'–0"

STRAND LEGEND

- + STRAIGHT BONDED STRAND
- ⊕ STRAIGHT STRAND DEBOND 0'–6" FROM END
- ⊕ STRAIGHT STRAND DEBOND 8'–0" FROM END
- ⊞ STRAIGHT STRAND DEBOND 12'–0" FROM END
- ⊕ EXTEND 18" OUT OF BEAM (90° BEND @ 9" OUT)

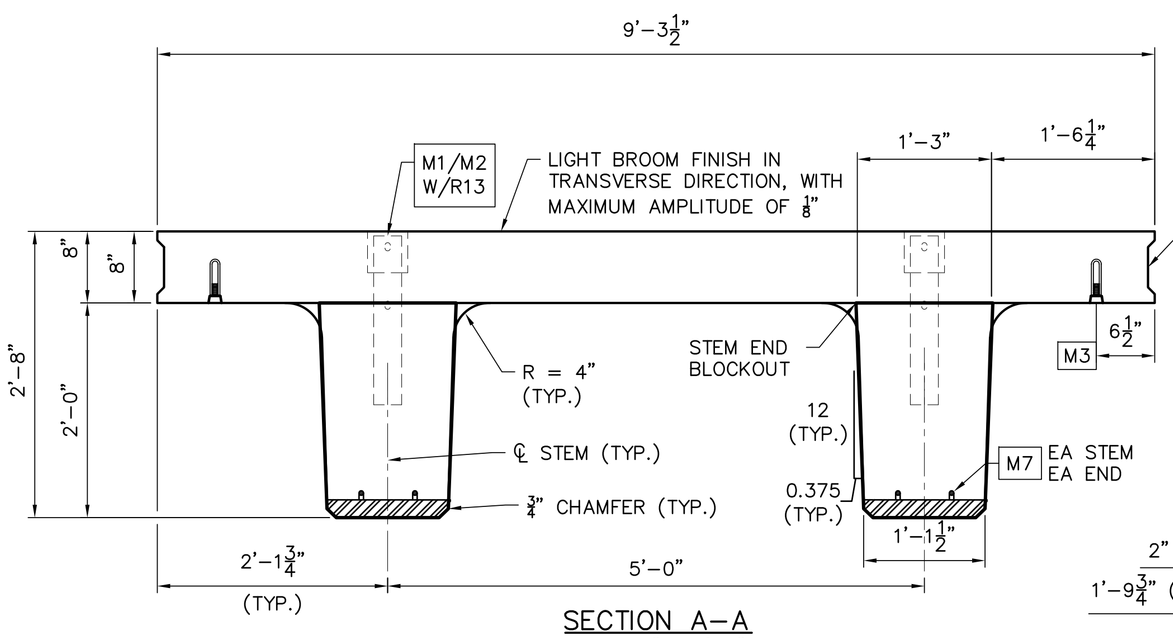

SECTION A–A
SCALE: 1" = 1'–0"

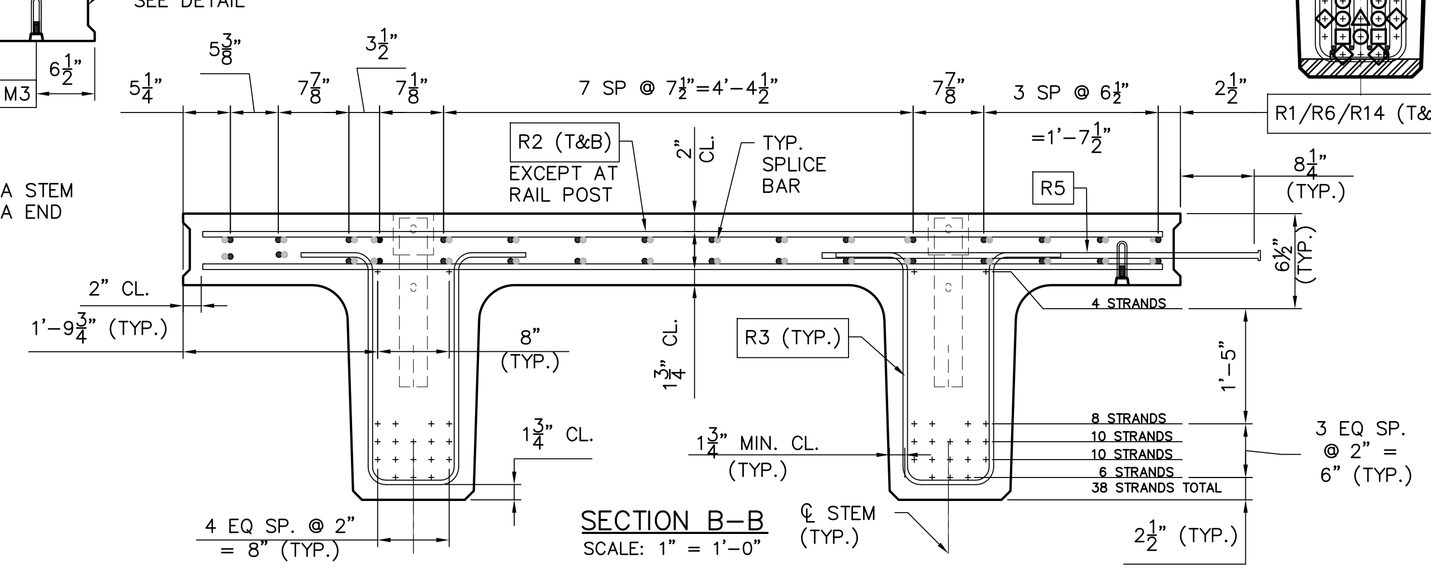

SECTION B–B
SCALE: 1" = 1'–0"

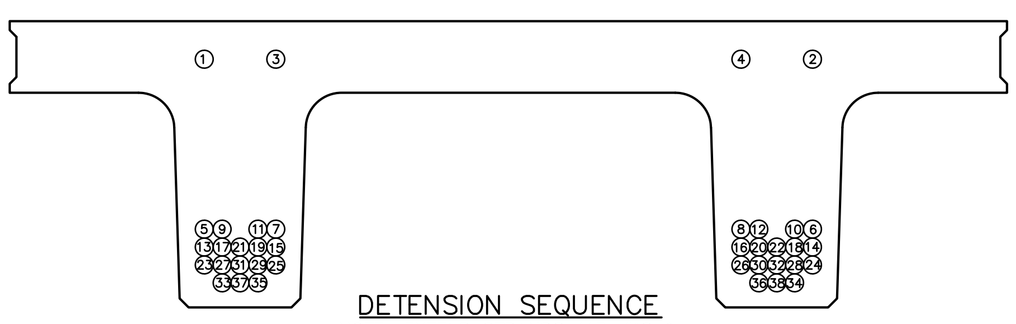

DETENSION SEQUENCE
NOTE: EXTEND STRANDS #15–#18 & #39–#42 BY 1'–6"

CONSTRUCTION SET DATE: 06/28/2013	
SHEET NAME: NXTBM–02 PLAN	
REVISION NO.	REVISION DATE

Dailey PRECAST
WILLIAM E. DAILEY PRECAST, LLC
295 AIRPORT ROAD
SHAFTSBURY, VT 05262
TEL: 802.442.4418 FAX: 802.442.0738

STATE OF VERMONT CHARLES H. SWANSON No. 8126 Structural LICENSED PROFESSIONAL ENGINEER

EIV TECHNICAL SERVICES
55 LEROY ROAD, WILLISTON, VT 05495
TEL: (802) 497-3653 FAX: (802) 497-3656

DATE: JUNE 2013 PROJECT # E1729
DRAWN BY: LKW/CN CHECKED BY: CHS

STATE OF VERMONT AGENCY OF TRANSPORTAION

PLYMOUTH, VERMONT
PROJECT NO: ER BRS 0149(5)

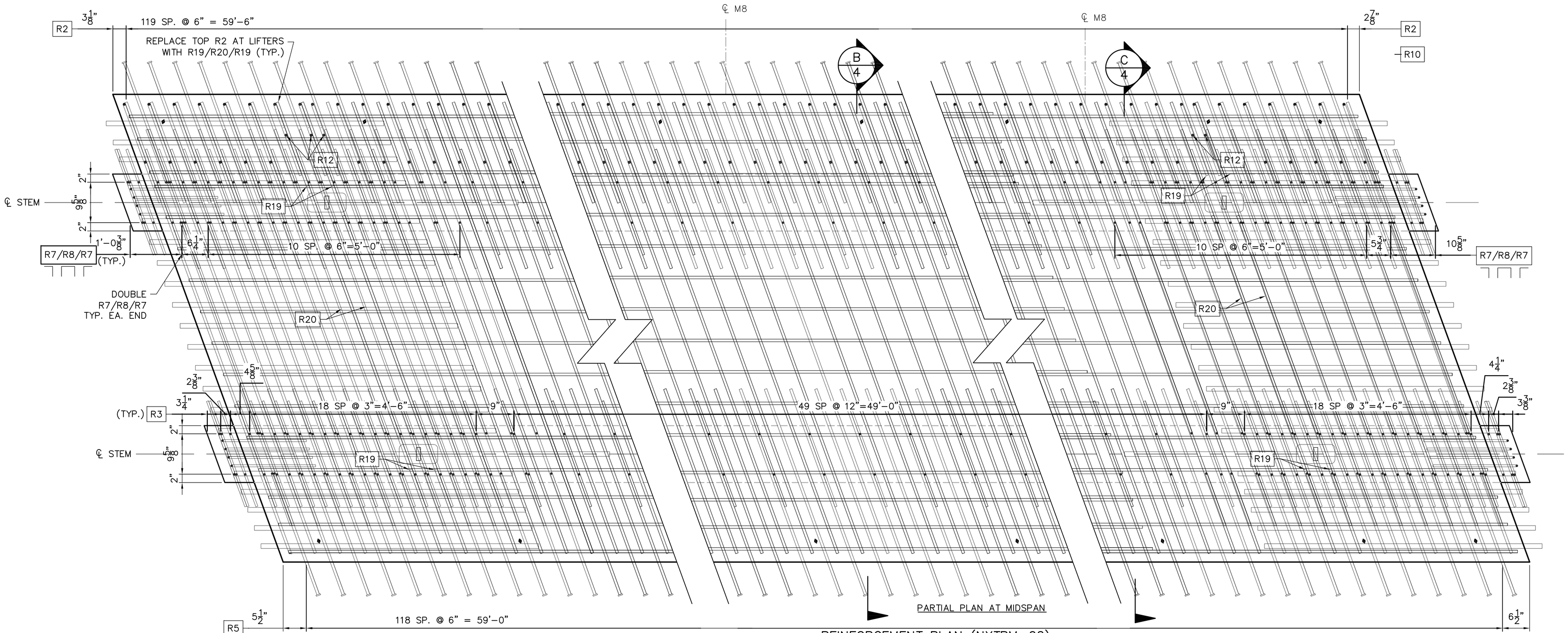

REINFORCEMENT PLAN (NXTBM-02)

SCALE: 1" = 1'-0"

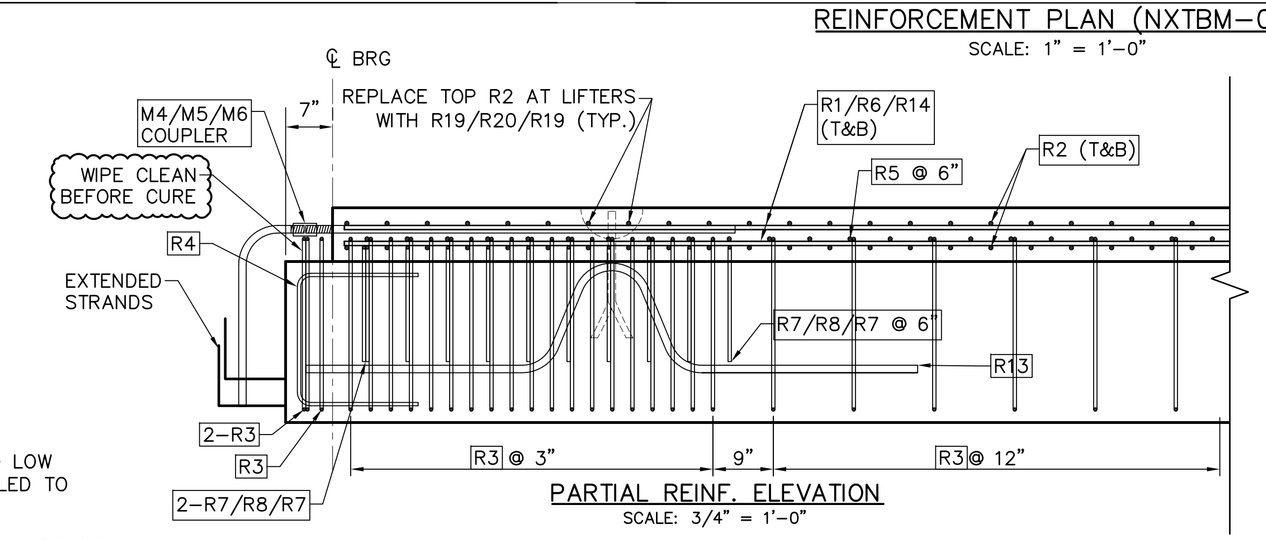

PARTIAL REINF. ELEVATION

SCALE: 3/4" = 1'-0"

REINFORCEMENT CHART

DESCRIPTION						QTY
BAR MARK	BAR SIZE	COATING	BENT/ STRAIGHT	LENGTH		
R1	5	E	STRAIGHT	20'-	0.00"	32
R2	5	E	STRAIGHT	9'-	6.38"	240
R3	4	E	BENT	6'-	6.63"	188
R4	4	E	BENT	4'-	7.50"	16
R5	5	E	HEADED	4'-	4.375"	238
R6	5	E	STRAIGHT	35'-	2.00"	32
R7	4	E	BENT	2'-	6.38"	52
R8	4	E	BENT	7'-	4.50"	26
R13	9	E	BENT	9'-	0.00"	4
R14	5	E	STRAIGHT	10'-	0.00"	32
R19	5	E	STRAIGHT	1'-	9.25"	6
R20	5	E	STRAIGHT	4'-	8.25"	6

NOTES:

STRANDS SHALL BE 270 KSI 0.6" ø LOW RELAXATION STRAIGHT STRAND PULLED TO 44 KIPS.

EACH STRAND SHALL BE FINALLY BURNED OR CUT OFF AT A DEPTH OF 1/2" INTO THE END OF THE BEAM AND THE RECESSED AREA AROUND THE STRAND SHALL BE FILLED WITH NON-SHRINK GROUT, EXCEPT AS NOTED.

STAGGER SPLICES OF R1\R6\R14 OR R21/R22 BARS BY 5'-0" MIN.

MIN LAP LENGTH OF R1\R6\R14 OR R21/R22 BARS IS 2'-9" MIN.

CONSTRUCTION SET DATE: 06/28/2013

SHEET NAME: NXTBM-02 REINFORCEMENT PLAN

REVISION NO.	REVISION DATE

Dailey PRECAST

WILLIAM E. DAILEY PRECAST, LLC
295 AIRPORT ROAD
SHAFTSBURY, VT 05262
TEL: 802.442.4418 FAX: 802.442.0738

STATE OF VERMONT — CHARLES H. SWANSON — No. 8126 — Structural — LICENSED PROFESSIONAL ENGINEER

EIV TECHNICAL SERVICES
55 LEROY ROAD, WILLISTON, VT 05495
TEL: (802) 497-3653 FAX: (802) 497-3656

DATE: JUNE 2013 PROJECT # E1729

DRAWN BY: LKW/CN CHECKED BY: CHS

STATE OF VERMONT AGENCY OF TRANSPORTAION

PLYMOUTH, VERMONT

PROJECT NO: ER BRS 0149(5)

NOTES:

(1) NXTBM-03 REQUIRED

FINISHES

TOP:	BROOM ($\frac{1}{8}$" AMP MAX.)
SIDES:	STEEL FORM
BOTTOM:	STEEL FORM
ENDS:	FORM

BEAMS SHALL BE HANDLED AND ERECTED USING LIFTERS ONLY. THE MINIMUM SLING ANGLE FOR SHOP PICKING SHALL BE 90° FROM THE HORIZONTAL. BEAMS SHALL BE STORED AND TRANSPORTED WITH TIMBER SUPPORTS LOCATED BELOW THE LIFTERS U.O.N.

WIPE CLEAN CURB REINF. PRIOR TO FINISHING BEAM TOP.

RAIL POST ANCHOR SHALL BE PROTECTED FROM CONCRETE ABOVE FINISHED CURB.

BEAM WEIGHT: 104,866 LBS

BILL OF MATERIALS				
MARK	NXTBM-03		QTY =	1
fc'=	8,000 PSI	@ 28 DAYS	fci' =	6,000 PSI
PART MARK	**DESCRIPTION**		**QTY**	**TOTAL QTY**
M1	MB RL-23 (79172) GALV.		4	4
M2	MB RL-45 (79166)		4	4
M3	DS F-64 FERRULE LOOP GALV.		16	16
M4	DS D-112 #9 A=5'-4" EPOXY		40	40
M7	P900 NXTBM END ASSEMBLY		4	4
M8	RAIL ASSEMBLY		7	7
	25.89 CY VT MIX ID # 53		1	1
	0.6" 7WS LR = 2348'-4"		1	1
INSTALL AFTER REMOVED FROM FORM.				
M5	DS D-110 #9 (111520) EPOXY		40	40
M6	DS D-102 #9 EPOXY A=8" B=2'-3"		40	40

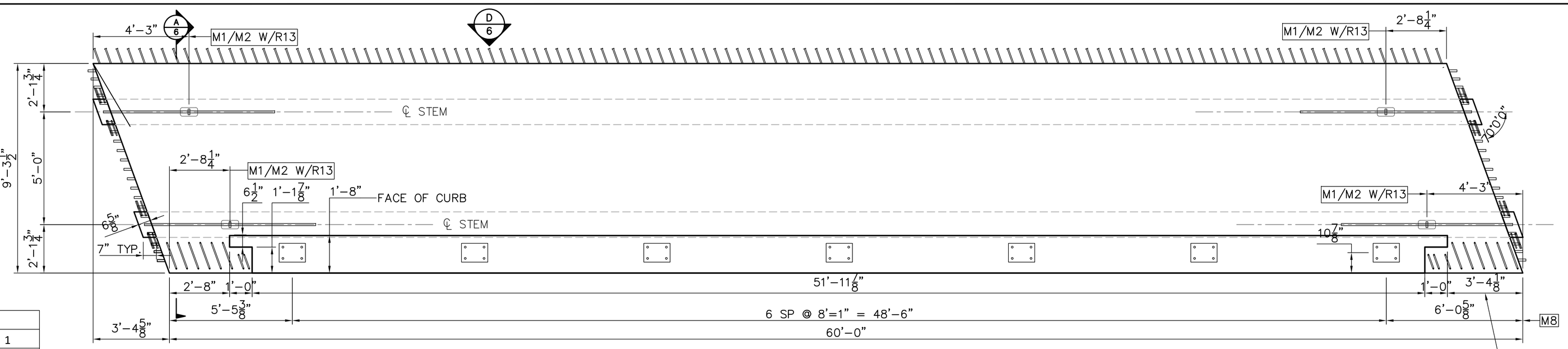

PLAN/FORM VIEW (NXTBM-03)
SCALE: 3/8" = 1'-0"

DIMENSION REVISED TO PROVIDE C.C. TO FIRST R9 BAR

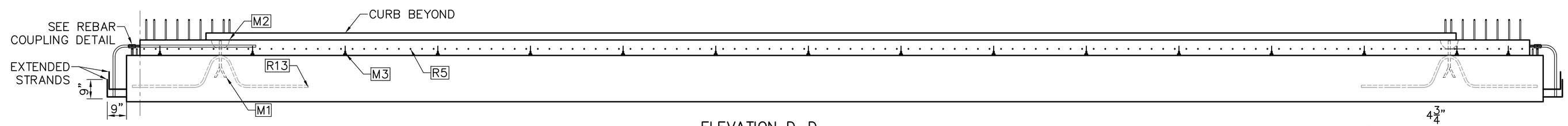

ELEVATION D-D
SCALE: 3/8" = 1'-0"

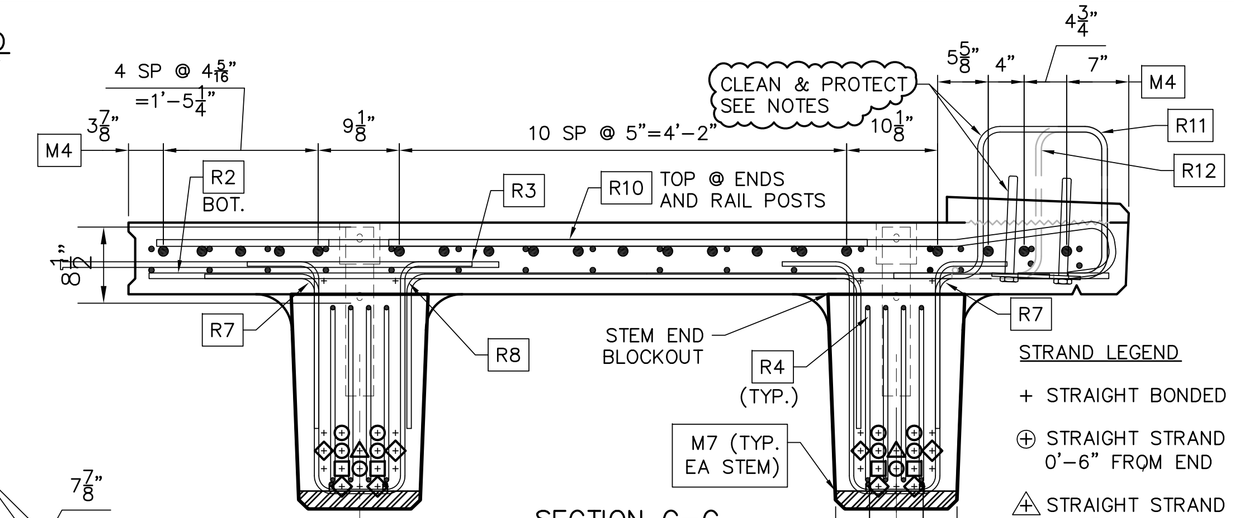

SECTION C-C
SCALE: 1" = 1'-0"

STRAND LEGEND

- + STRAIGHT BONDED STRAND
- ⊕ STRAIGHT STRAND DEBOND 0'-6" FROM END
- ⊕ STRAIGHT STRAND DEBOND 8'-0" FROM END
- ⊞ STRAIGHT STRAND DEBOND 12'-0" FROM END
- ⊕ EXTEND 18" OUT OF BEAM (90° BEND @ 9" OUT)

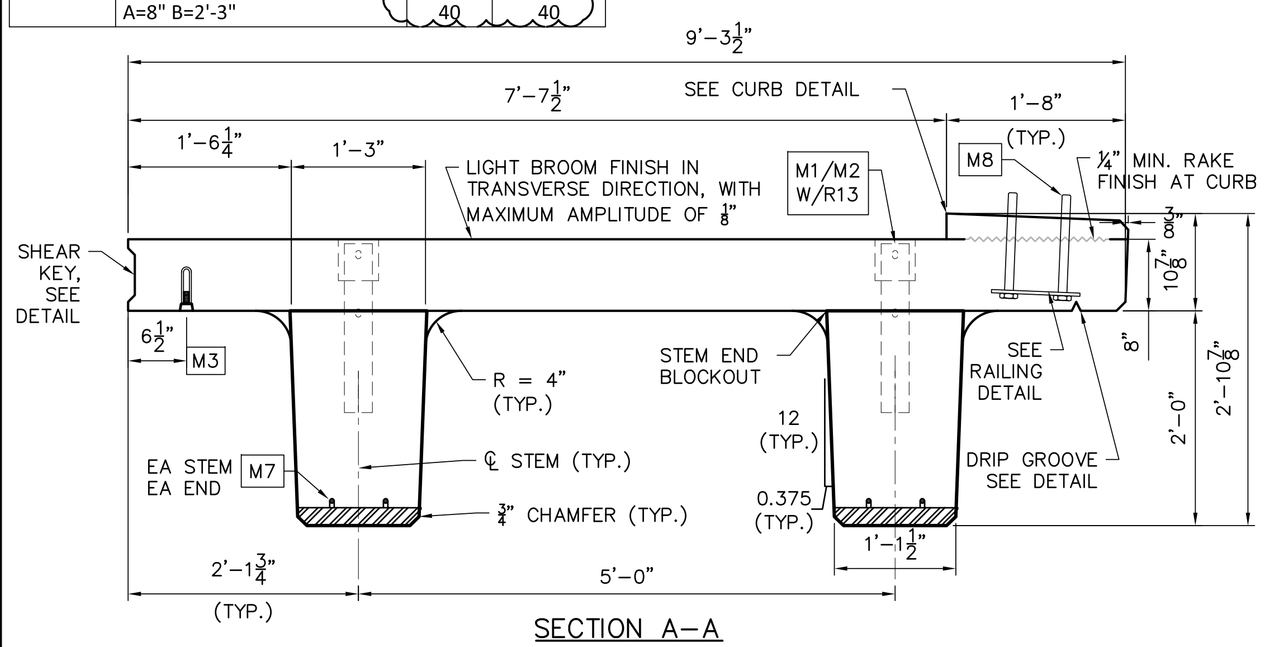

SECTION A-A
SCALE: 1" = 1'-0"

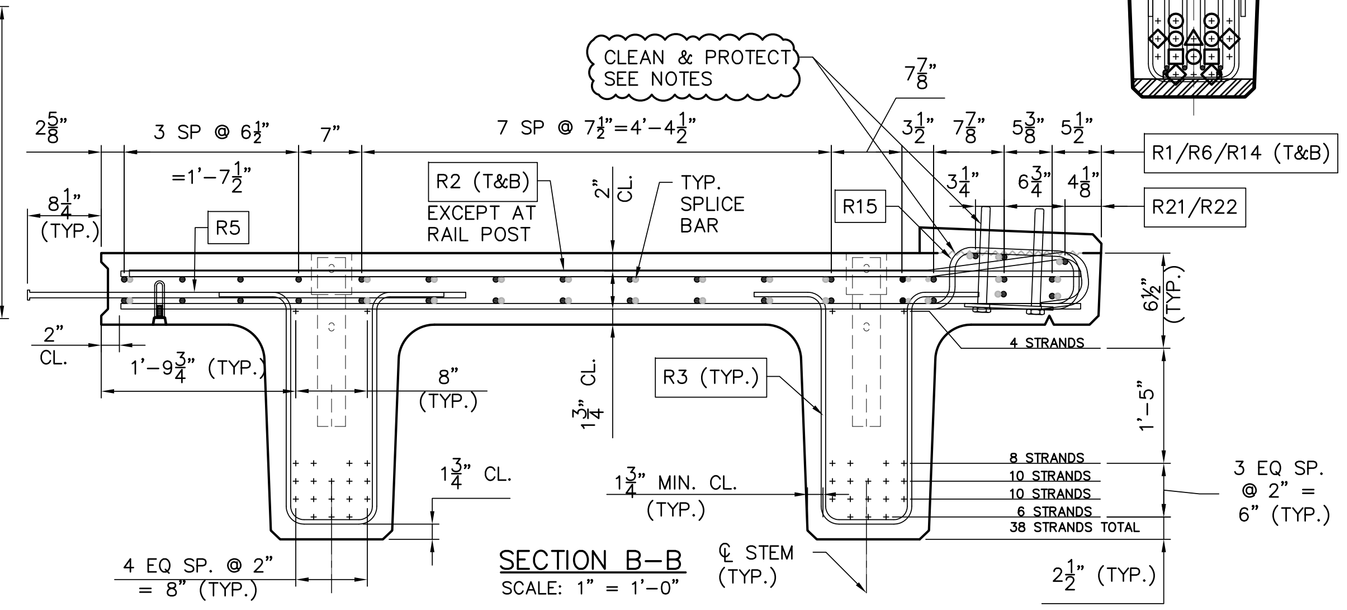

SECTION B-B
SCALE: 1" = 1'-0"

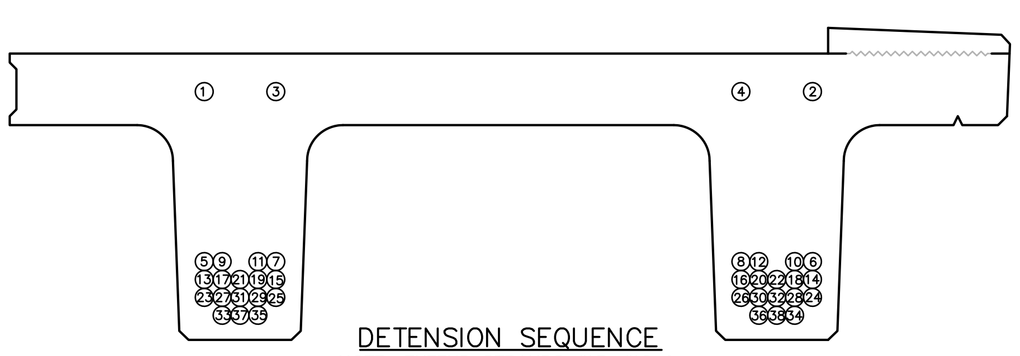

DETENSION SEQUENCE
NOTE: EXTEND STRANDS #13-#16 & #33-#36 BY 1'-6"

CONSTRUCTION SET DATE: 06/28/2013	
SHEET NAME: NXTBM-03 PLAN	
REVISION NO.	REVISION DATE

Dailey PRECAST
WILLIAM E. DAILEY PRECAST, LLC
295 AIRPORT ROAD
SHAFTSBURY, VT 05262
TEL: 802.442.4418 FAX: 802.442.0738

STATE OF VERMONT — CHARLES H. SWANSON — No. 8126 — Structural — LICENSED PROFESSIONAL ENGINEER

EIV TECHNICAL SERVICES
55 LEROY ROAD, WILLISTON, VT 05495
TEL: (802) 497-3653 FAX: (802) 497-3656

DATE: JUNE 2013 PROJECT # E1729
DRAWN BY: LKW/CN CHECKED BY: CHS

STATE OF VERMONT AGENCY OF TRANSPORTAION

PLYMOUTH, VERMONT
PROJECT NO: ER BRS 0149(5)

SHEET 6 OF 9

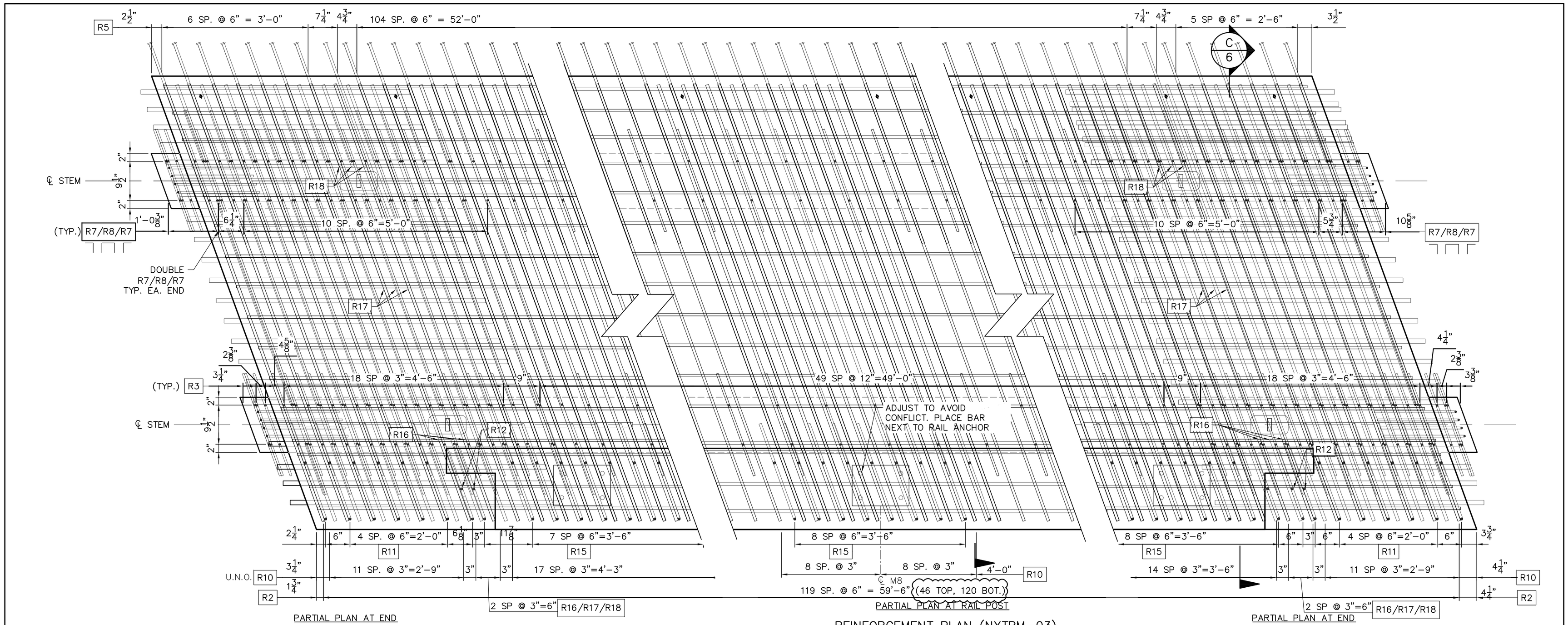

REINFORCEMENT PLAN (NXTBM–03)

SCALE: 1" = 1'–0"

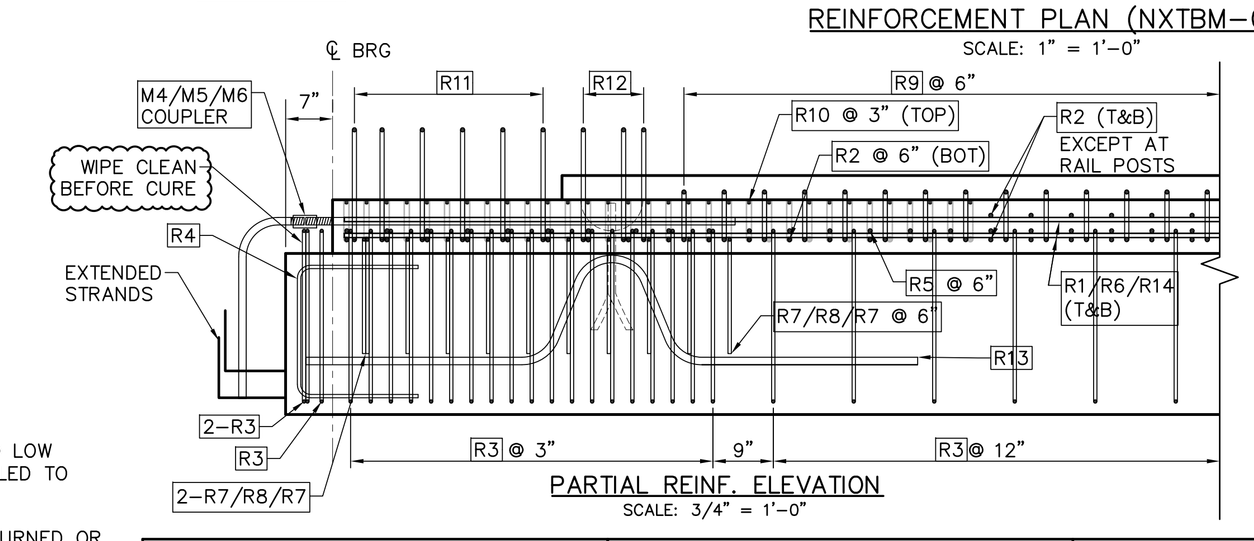

PARTIAL REINF. ELEVATION

SCALE: 3/4" = 1'–0"

REINFORCEMENT CHART						
DESCRIPTION						QTY
BAR MARK	BAR SIZE	COATING	BENT/ STRAIGHT	LENGTH		
R1	5	E	STRAIGHT	20'-	0.00"	32
R2	5	E	STRAIGHT	9'-	6.38"	166
R3	4	E	BENT	6'-	6.63"	188
R4	4	E	BENT	4'-	7.50"	16
R5	5	E	HEADED	4'-	4.375"	120
R6	5	E	STRAIGHT	35'-	2.00"	32
R7	4	E	BENT	2'-	6.38"	52
R8	4	E	BENT	7'-	4.50"	26
R10	6	E	BENT	9'-	11.75"	142
R11	5	E	BENT	5'-	4.63"	12
R12	5	E	BENT	4'-	6.00"	5
R13	9	E	BENT	9'-	0.00"	4
R14	5	E	STRAIGHT	10'-	0.00"	32
R15	5	E	BENT	4'-	2.88"	62
R16	6	E	BENT	2'-	5.70"	6
R17	6	E	STRAIGHT	4'-	8.25"	6
R18	6	E	STRAIGHT	1'-	9.25"	6
R21	5	E	STRAIGHT	40'-	0.00"	3
R22	5	E	STRAIGHT	15'-	0.00"	3

NOTES:

STRANDS SHALL BE 270 KSI 0.6" ø LOW RELAXATION STRAIGHT STRAND PULLED TO 44 KIPS.

EACH STRAND SHALL BE FINALLY BURNED OR CUT OFF AT A DEPTH OF 1/2" INTO THE END OF THE BEAM AND THE RECESSED AREA AROUND THE STRAND SHALL BE FILLED WITH NON–SHRINK GROUT, EXCEPT AS NOTED.

STAGGER SPLICES OF R1\R6\R14 OR R21/R22 BARS BY 5'–0" MIN.

MIN LAP LENGTH OF R1\R6\R14 OR R21/R22 BARS IS 2'–9" MIN.

CONSTRUCTION SET DATE: 06/28/2013

SHEET NAME: NXTBM–03 REINFORCEMENT PLAN

REVISION NO.	REVISION DATE

Dailey PRECAST

WILLIAM E. DAILEY PRECAST, LLC
295 AIRPORT ROAD
SHAFTSBURY, VT 05262
TEL: 802.442.4418 FAX: 802.442.0738

STATE OF VERMONT
CHARLES H. SWANSON
No. 8126
Structural
LICENSED
PROFESSIONAL ENGINEER

EIV TECHNICAL SERVICES
55 LEROY ROAD, WILLISTON, VT 05495
TEL: (802) 497-3653 FAX: (802) 497-3656

DATE: JUNE 2013 PROJECT # E1729
DRAWN BY: LKW/CN CHECKED BY: CHS

STATE OF VERMONT AGENCY OF TRANSPORTAION

PLYMOUTH,
VERMONT
PROJECT NO: ER BRS 0149(5)

SHEET 7 OF 9

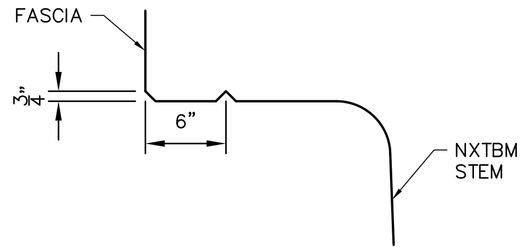

DRIP GROOVE DETAIL
SCALE: 1½" = 1'–0"

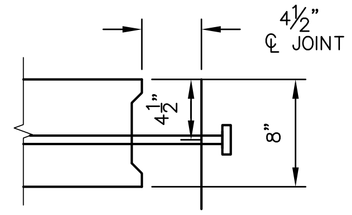

SHEAR KEY NOTES:

- FLANGE EDGES AND BEAM STEMS IN CONTACT WITH HPC RAPID SET CONCRETE SHALL BE SANDBLASTED PRIOR TO DELIVERY AND POWER WASHED WITH WATER PRIOR TO ERECTION OF THE BEAMS.

SHEAR KEY DETAIL (NXTBM)
SCALE: 1½" = 1'–0"

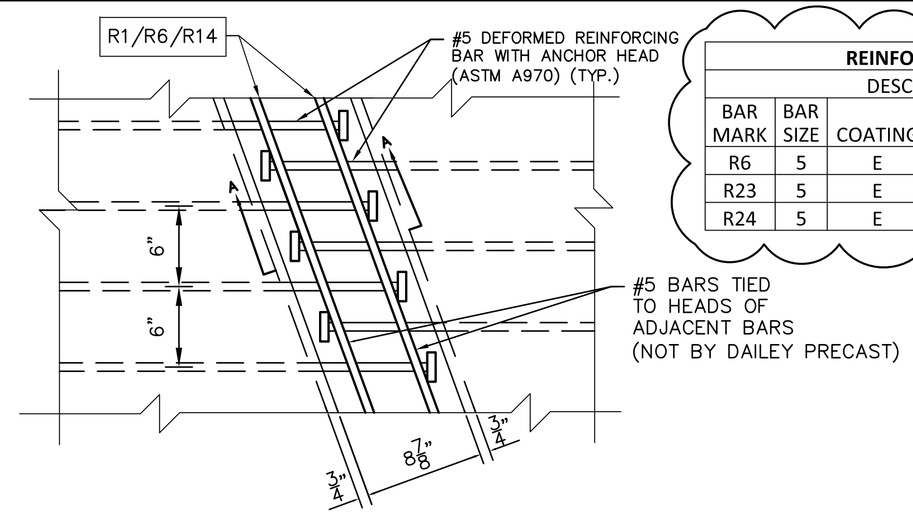

REINFORCEMENT CHART					
DESCRIPTION					
BAR MARK	BAR SIZE	COATING	BENT/ STRAIGHT	LENGTH	QTY
R6	5	E	STRAIGHT	35'-2.00"	4
R23	5	E	BENT	22'-0.00"	4
R24	5	E	BENT	12'-0.00"	4

FLANGE CLOSURE POUR DETAILS
SCALE: 1 1/2" = 1'–0"

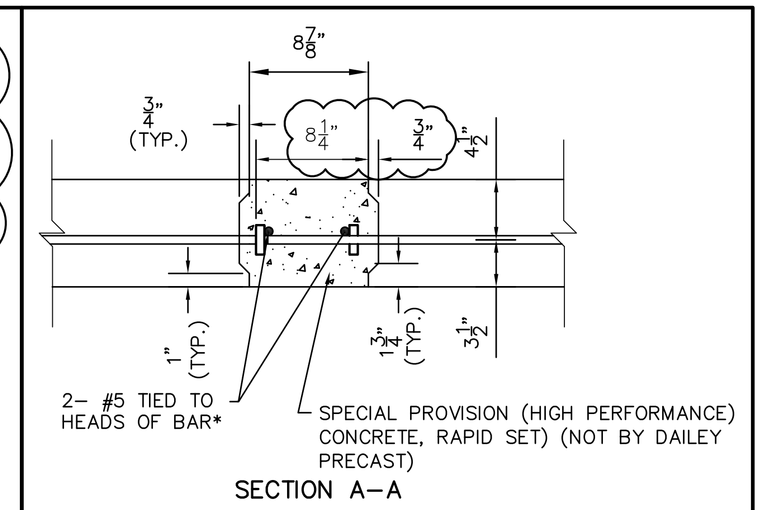

SECTION A–A

FLANGE CLOSURE POUR SECTION
SCALE: 1 1/2" = 1'–0"

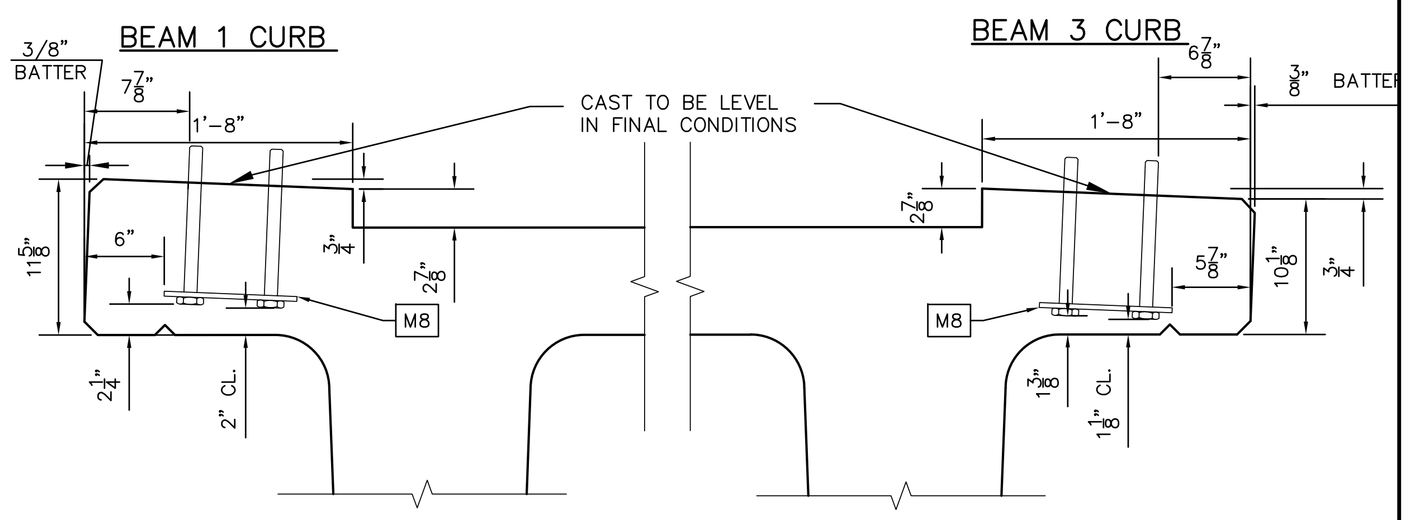

NXTBM CURB DETAIL
SCALE: 1 1/2" = 1'–0"

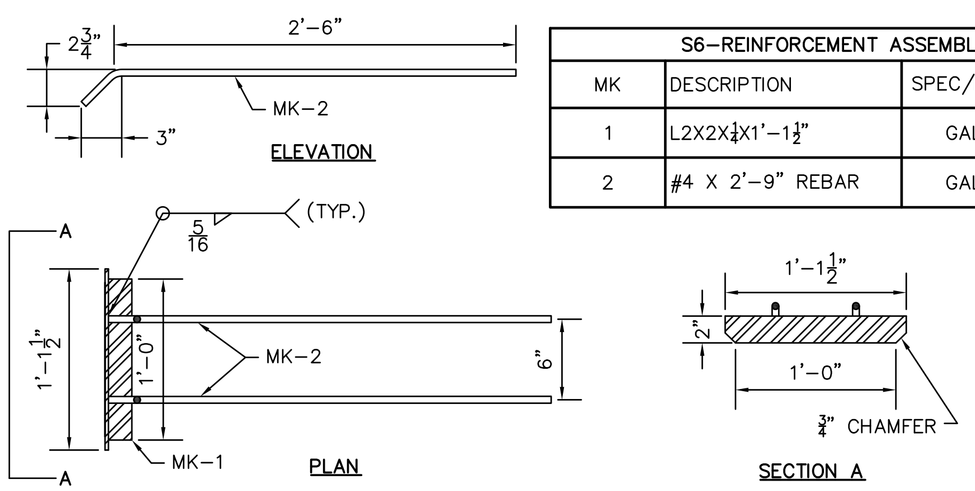

S6–REINFORCEMENT ASSEMBLY BILL OF MATERIALS				
MK	DESCRIPTION	SPEC/FINISH	QTY. PER BEAM	QTY. TOTAL
1	L2X2X¼X1'–1½"	GALV.	4	12
2	#4 X 2'–9" REBAR	GALV.	8	24

NOTE:

PLACE ANGLE (P900) CENTERED IN BEAM STEM FLUSH WITH BEAM FACE OF FORM. ADDITIONAL REINFORCEMENT PROVIDED TO AID IN THE PREVENTION OF BEAM END CRACKING.

REINFORCEMENT ASSEMBLY DETAILS
P900 (PART S6)
SCALE: 1½" = 1'–0"

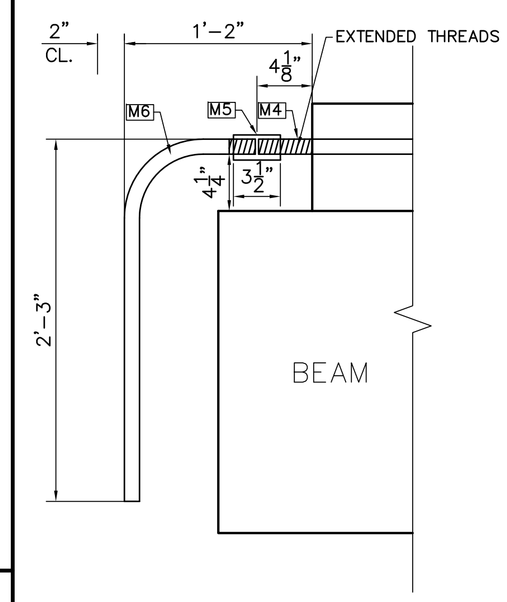

REBAR COUPLING DETAIL
SCALE: 1 1/2" = 1'–0"

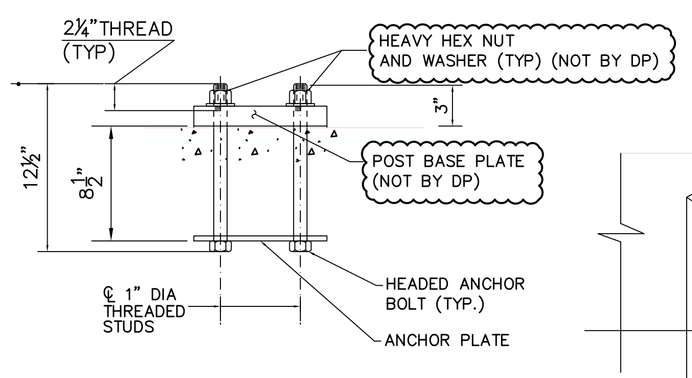

RAILING POST ANCHORAGE

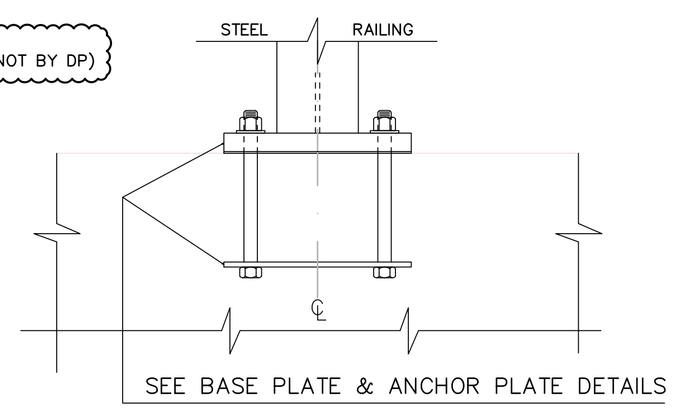

RAILING ANCHOR ELEVATION

NOTE:
AFTER TEMPORARY INSERT USE IS COMPLETE, PATCH OVER INSERT WITH NON–SHRINK CONCRETE PATCH MATERIAL. COLOR TO MATCH SURROUNDING CONCRETE. (NOT BY DAILEY PRECAST)

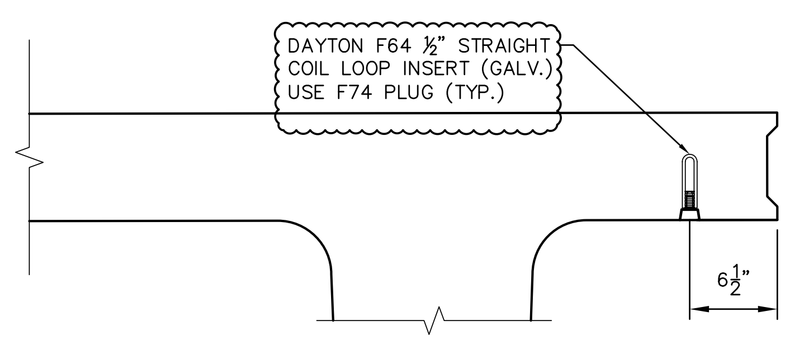

COIL LOOP DETAIL NXTBM
(APP. SLAB SIM.)
SCALE: 1 1/2" = 1'–0"

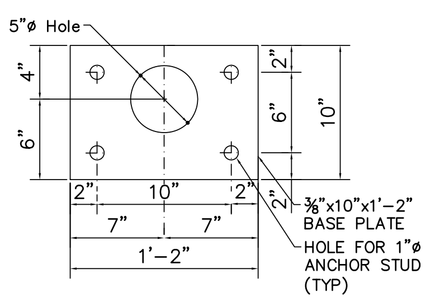

ANCHOR PLATE DETAIL

RAIL POST ANCHOR ASSEMBLY
SCALE: 1 1/2" = 1'–0"

CONSTRUCTION SET DATE: 06/28/2013	
SHEET NAME: DETAILS	
REVISION NO.	REVISION DATE

Dailey PRECAST
WILLIAM E. DAILEY PRECAST, LLC
295 AIRPORT ROAD
SHAFTSBURY, VT 05262
TEL: 802.442.4418 FAX: 802.442.0738

STATE OF VERMONT
CHARLES H. SWANSON
No. 8126
Structural
LICENSED PROFESSIONAL ENGINEER

EIV TECHNICAL SERVICES
55 LEROY ROAD, WILLISTON, VT 05495
TEL: (802) 497-3653 FAX: (802) 497-3656

DATE: JUNE 2013 PROJECT # E1729
DRAWN BY: LKW/CN CHECKED BY: CHS

STATE OF VERMONT AGENCY OF TRANSPORTAION

PLYMOUTH, VERMONT
PROJECT NO: ER BRS 0149(5)

SHEET 8 OF 9

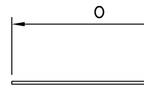

TYPE 27

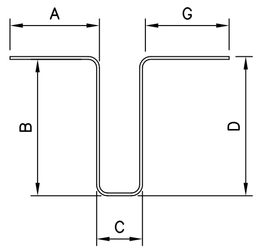

TYPE S4

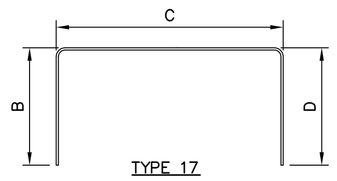

TYPE 17

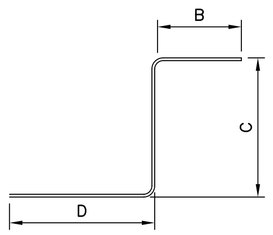

TYPE 20

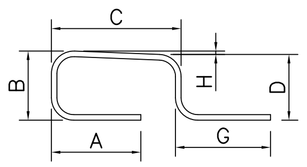

TYPE S5 MOD.

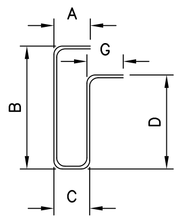

TYPE S5

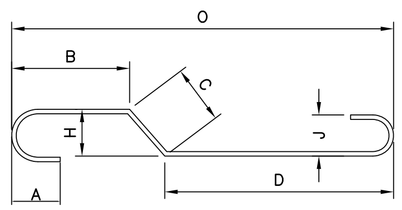

TYPE 5

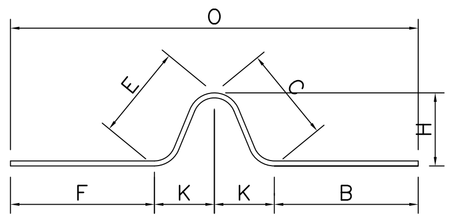

TYPE 4

REINFORCEMENT CHART

BAR MARK	DESCRIPTION BAR SIZE	COATING	BENT/ STRAIGHT	LENGTH	TOTAL QTY IN PROJECT	TYPE	A	B	C	D	E	F	G	H	J	K	L	O	P
R1	5	E	STRAIGHT	20'- 0.00"	96	27												20'- 0.00"	
R2	5	E	STRAIGHT	9'- 6.38"	572	27												9'- 6.38"	
R3	4	E	BENT	6'- 6.63"	564	S4	0'- 8.50"	2'- 1.88"	0'- 10.63"	2'- 1.88"			0'- 8.50"						
R4	4	E	BENT	4'- 7.50"	48	17		1'- 6.00"	1'- 7.75"	1'- 6.00"									
R5	5	E	HEADED	4'- 4.375"	478	27												4'- 4.375"	
R6	5	E	STRAIGHT	35'- 2.00"	100	27												35'- 2.00"	
R7	4	E	BENT	2'- 6.38"	156	20		1'- 1.57"	1'- 5.25"	0'- 0.00"									
R8	4	E	BENT	7'- 4.50"	78	17		1'- 5.25"	4'- 6.00"	1'- 5.25"									
R9	5	E	BENT	3'- 10.75"	62	S5 MOD.	0'- 10.64"	0'- 7.75"	1'- 3.43"	0'- 7.38"			0'- 11.31"	0'- 0.38"					
R10	6	E	BENT	9'- 11.75"	284	5	0'- 6.00"	0'- 0.00"	1'- 6.50"	7'- 11.25"				0'- 6.00"	0'- 0.00"			9'- 11.75"	
R11	5	E	BENT	5'- 4.63"	24	S5	0'- 10.75"	1'- 5.00"	1'- 3.38"	1'- 5.00"			0'- 10.75"						
R12	5	E	BENT	4'- 11.63"	10	S5	0'- 6.38"	1'- 5.00"	0'- 8.50"	1'- 5.00"			0'- 10.75"						
R13	9	E	BENT	9'- 0.00"	12	4	0'- 0.00"	2'- 8.13"	1'- 9.13"	0'- 0.00"	1'- 9.13"	2'- 8.13"	0'- 0.00"	1'- 4.38"		1'- 1.38"		7'- 7.13"	
R14	5	E	STRAIGHT	10'- 0.00"	96	27												10'- 0.00"	
R15	5	E	BENT	4'- 2.88"	62	S5 MOD.	0'- 10.75"	0'- 6.50"	1'- 3.38"	0'- 6.88"			0'- 11.38"	0'- 0.38"					
R16	6	E	BENT	2'- 7.38"	12	5	0'- 6.00"	0'- 0.00"	1'- 4.13"	0'- 3.25"			0'- 0.00"	0'- 6.00"				1'- 9.25"	
R17	6	E	STRAIGHT	4'- 8.25"	12	27												4'- 8.25"	
R18	6	E	STRAIGHT	1'- 9.25"	12	27												1'- 9.25"	
R19	5	E	STRAIGHT	1'- 9.25"	6	27												1'- 9.25"	
R20	5	E	STRAIGHT	4'- 8.25"	6	27												4'- 8.25"	
R21	5	E	STRAIGHT	40'- 0.00"	3	27												40'- 0.00"	
R22	5	E	STRAIGHT	15'- 0.00"	3	27												15'- 0.00"	
R23	5	E	BENT	22'- 0.00"	4	17		2'- 0.00"	20'- 0.00"	0'- 0.00"									
R24	5	E	BENT	12'- 0.00"	4	17		2'- 0.00"	10'- 0.00"	0'- 0.00"									

NOTES:

COATINGS
S = STAINLESS STEEL
E = EPOXY COATED
B = PLAIN/BLACK

QTY = TOTAL QUANTITY IN PROJECT

ALL MILD REBAR TO BE AASHTO M31, GRADE 60

ANY EPOXY DAMAGED EPOXY COATING SHALL BE REPAIRED WITH AN APPROVED TWO PART EPOXY.

CONSTRUCTION SET DATE: 06/28/2013

SHEET NAME: REINFORCEMENT DETAILS

REVISION NO.	REVISION DATE

Dailey PRECAST
WILLIAM E. DAILEY PRECAST, LLC
295 AIRPORT ROAD
SHAFTSBURY, VT 05262
TEL: 802.442.4418 FAX: 802.442.0738

STATE OF VERMONT
CHARLES H. SWANSON
No. 8126
Structural
LICENSED PROFESSIONAL ENGINEER

EIV TECHNICAL SERVICES
55 LEROY ROAD, WILLISTON, VT 05495
TEL: (802) 497-3653 FAX: (802) 497-3656

DATE: JUNE 2013 PROJECT # E1729
DRAWN BY: LKW/CN CHECKED BY: CHS

STATE OF VERMONT AGENCY OF TRANSPORTAION

PLYMOUTH,
VERMONT
PROJECT NO: ER BRS 0149(5)