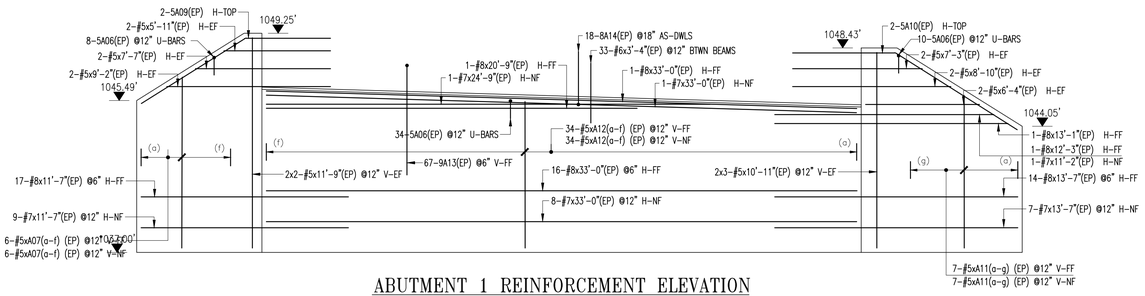

ABUTMENT 1 REINFORCEMENT ELEVATION

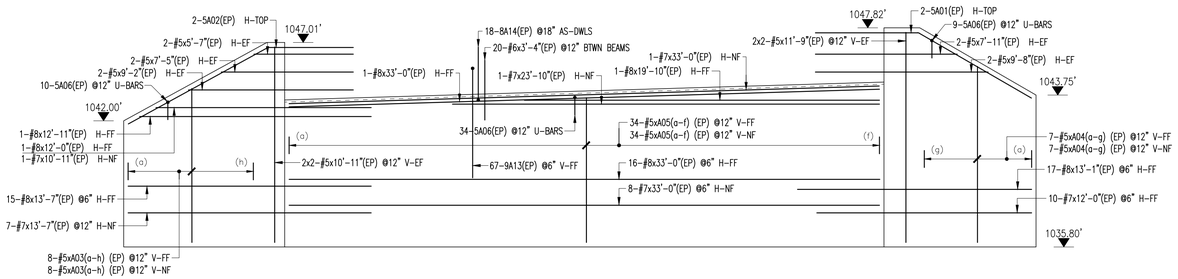

ABUTMENT 2 REINFORCEMENT ELEVATION

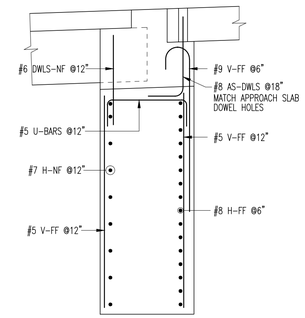

TYPICAL ABUTMENT SECTION

ABUTMENT "1" AS SHOWN
ABUTMENT "2" OPP. HAND

SEE CONTRACT LIST AND SECTIONS FOR CLOSURE POUR AND TRANSITION BARRIERS REINFORCEMENT AND PLACING

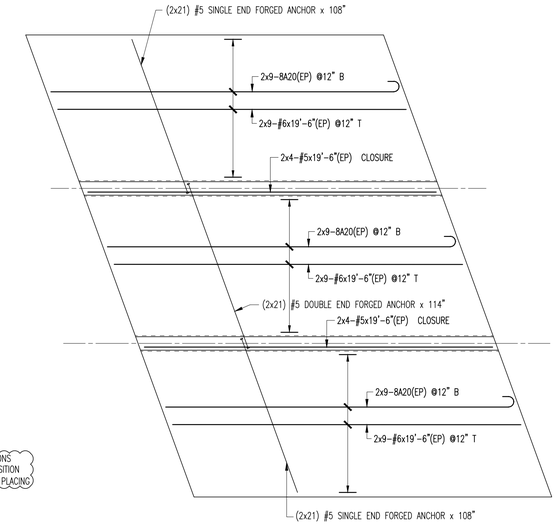

ABUTMENT 2 APPROACH SLAB REINFORCEMENT-A.S.
ABUTMENT 1 APPROACH SLAB REINFORCEMENT-O.H.

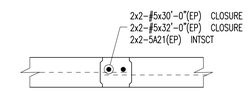

CLOSURE STRIPS IN DECK SLAB
(2) REQUIRED

Drawing Sheet : R01							BAR LIST											
Bar Mark	Qty	Size	Total Length	Type	'A'	'B'	'C'	'D'	'E'	'F'	'G'	'H'	'J'	'K'	'O'	'R'
A03a	2	#5	6'-8"			6'-8"										
A03h	2	#5	10'-6"			10'-6"										
First and Last Bar in Vary Group Shown Only																
A04a	2	#5	8'-1"			8'-1"										
A04g	2	#5	11'-7"			11'-7"										
First and Last Bar in Vary Group Shown Only																
A05a	12	#5	7'-7"			7'-7"										
A05f	8	#5	8'-6"			8'-6"										
First and Last Bar in Vary Group Shown Only																
A07a	2	#5	8'-1"			8'-1"										
A07f	2	#5	11'-3"			11'-3"										
First and Last Bar in Vary Group Shown Only																
A11a	2	#5	6'-8"			6'-8"										
A11g	2	#5	10'-5"			10'-5"										
First and Last Bar in Vary Group Shown Only																
A12a	12	#5	7'-8"			7'-8"										
A12f	8	#5	8'-6"			8'-6"										
First and Last Bar in Vary Group Shown Only																
5A01	2	#5	13'-1"	3		5'-9 X"	7'-3 X"					3'-8 X"		6'-3 X"	12'-K"	
5A02	2	#5	13'-5"	3		4'-9 X"	8'-11"					4'-4"		7'-9 X"	12'-6 K"	
5A06	105	#5	5'-0"	17		1'-0"	3'-0"	1'-0"								
5A09	2	#5	11'-7 X"	3		4'-9 X"	6'-10 X"					3'-8 X"		5'-9 X"	10'-6 K"	
5A10	2	#5	13'-8 X"	3		5'-9 X"	8'-K"					4'-4"		6'-9 X"	12'-6 K"	
8A14	36	#8	4'-4"	2	1'-4"	3'-0"										
9A13	134	#9	7'-5"	1	1'-3"	6'-2"							11 K"			
8A20	54	#8	20'-5"	1	11"	19'-6"							8"			
5A21	4	#5	5'-10"	2	10"	5'-0"										

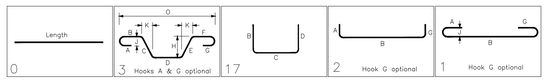

Vermont Agency of Transportation
RECEIVED
BARKER R-BAR - Markup.pdf
CK'D BY _____ OK'D BY _____
April 25, 2013
RESUBMIT Yes Rejected
BY Rob Young DATE 04/30/2013

No.	Description	Date	By
1	APPROVAL PRINT	04/24/13	CPS

Revisions and Issue Record

The full intent and purpose of this drawing is the placing of reinforcing steel bars ONLY. It is NOT to be used as a means of communication between the Architect, Engineer, Contractor or any other Sub-trades.

THIS DRAWING IS NOT TO BE SCALED.

HarrisRebar Barker Steel — National Strength. Local Service.

DETAILED AT:
CANAAN
NEW HAMPSHIRE

Project: PLYMOUTH ER BRS 0149(5)
PLYMOUTH VT

Drawing: BRIDGE ABUTMENT REINFORCEMENT

Customer: COLD RIVER BRIDGES

Engineer: T-Y-LIN INTERNATIONAL

Refer to Release:

Date	Drawn	Chkd.	JOB No.	Dwg. No.
04/23/13	CPS		10049702	R01

W:\(sample)\Projects\10049702\Placing Drawings\DWGs\R01.dwg