T·Y·LIN INTERNATIONAL

Pittsfield Bridge 124

VT Route 100
Over
South Branch Tweed River

Pittsfield, VT

VTrans Project: ER BRF 022-1(23)

Post-Tensioning Design Calculations

March 3, 2014

Prepared by

T·Y·LIN INTERNATIONAL
engineers | planners | scientists
12 Northbrook Drive
Building A, Suite One
Falmouth, ME 04105

Joshua K. Olund, P.E.

STATE OF VERMONT
JOSHUA K. OLUND
NO. 72818
Structural Part II
LICENSED
PROFESSIONAL ENGINEER

3/3/2014

REVIEWED BY VTRANS 3-7-2014

Table of Contents

1. LARSA Model

   a. Geometry

   b. Inputs

   c. Results

2. Post Processing Calculations

   a. Stress Checks (Service)

   b. PT model Verification Calculations

   c. Construction Loads

   d. Ultimate Capacity (Strength) Checks

   e. Bursting Steel Design

   f. Interface Shear Checks

1. LARSA Model

T·Y·LIN INTERNATIONAL

Project: PITTSFIELD	Job No. 411762	Sheet: 1 of 4
Item: LARSA MODEL INPUTS	Designer: J. OLIVO	Date: 1/7/2014
	Checker:	Date:
GEOMETRY		Grid: 1/10"

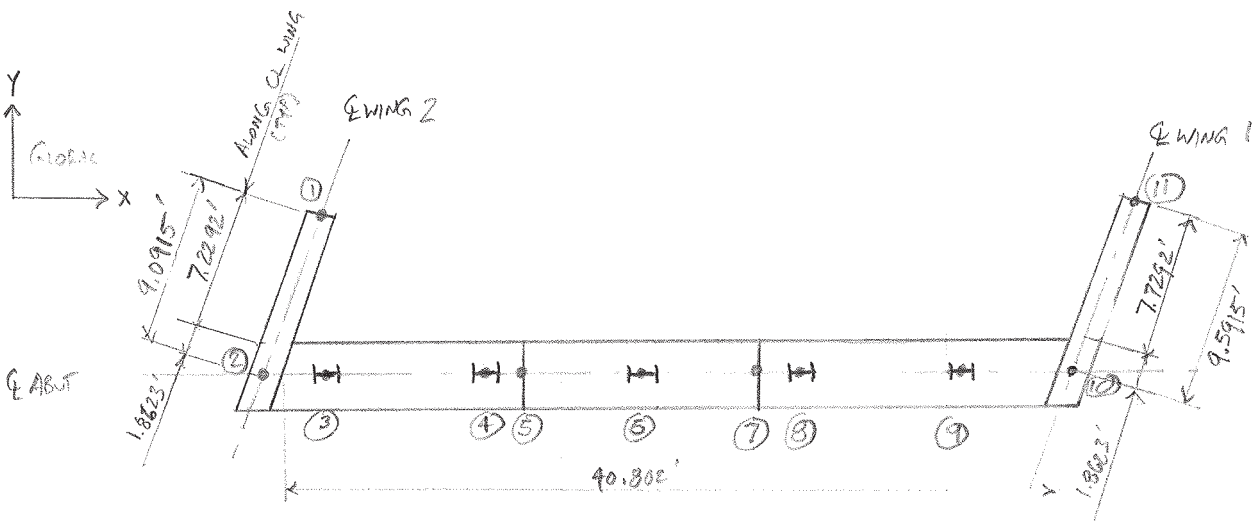

ABUT #1 PLAN

POINT 1 = [(0 + 9.0915 SIN 20), (0 + 9.0915 COS 20)] = (3.1095, 8.5432)

POINT 2 = (0,0)

POINT 3 = 2'-4 1/4" + 9"/COS 20° = (3.1523, 0)

POINT 4 = POINT 3 + 8.33' ∴ (11.4586, 0)

POINT 5 = POINT 4 + 2.0' ∴ (13.4586, 0)

POINT 6 = POINT 4 + 8.33' ∴ (19.8190, 0)

POINT 7 = POINT 5 + 12.67' ∴ (26.1523, 0)

POINT 8 = POINT 6 + 8.33' ∴ (28.1523, 0)

POINT 9 = POINT 8 + 8.33' ∴ (36.4856, 0)

POINT 10 = POINT 9 + (5'-1 3/8") + 9"/COS 20° = (42.3983, 0)

POINT 11 = [(42.3983 + 9.5915 SIN 20), (0 + 9.5915 COS 20)]

= (45.6788, 9.0131)

T·Y·LIN INTERNATIONAL

Project: PITTSFIELD	Job No. 411 762	Sheet: 2 of 4
Item: LARSA MODEL INPUTS	Designer: J. Olmos	Date: 1/9/14
	Checker:	Date:
RESULT LOCATIONS		Grid: 1/10"

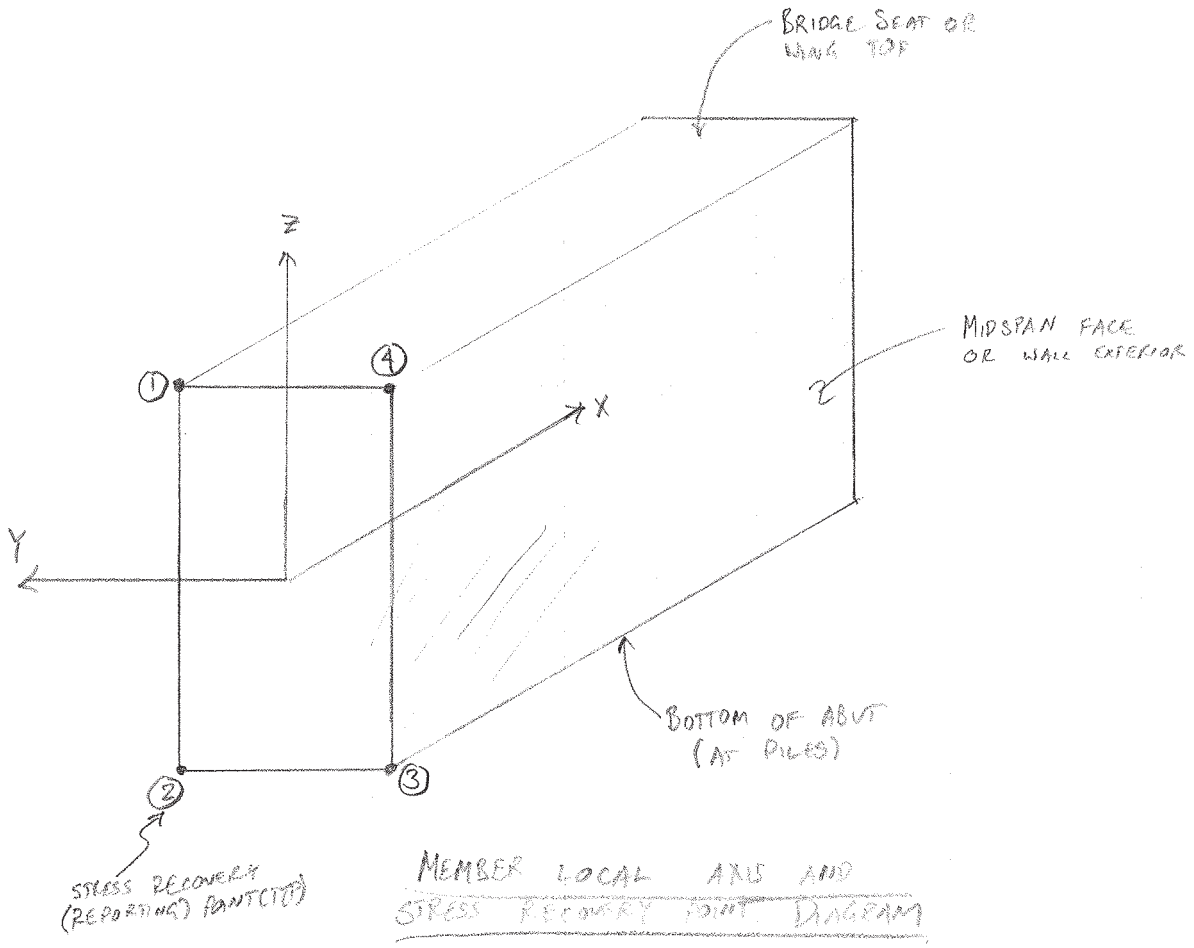

MEMBER LOCAL AXIS AND STRESS RECOVERY POINT DIAGRAM

TY·LIN INTERNATIONAL

Project: PITTSFIELD	Job No. 411762	Sheet: 3 of 4
Item: LARSA MODEL INPUTS	Designer: J. QUAND	Date: 1/7/14
	Checker:	Date:
PT COORDINATES		Grid: 1/10"

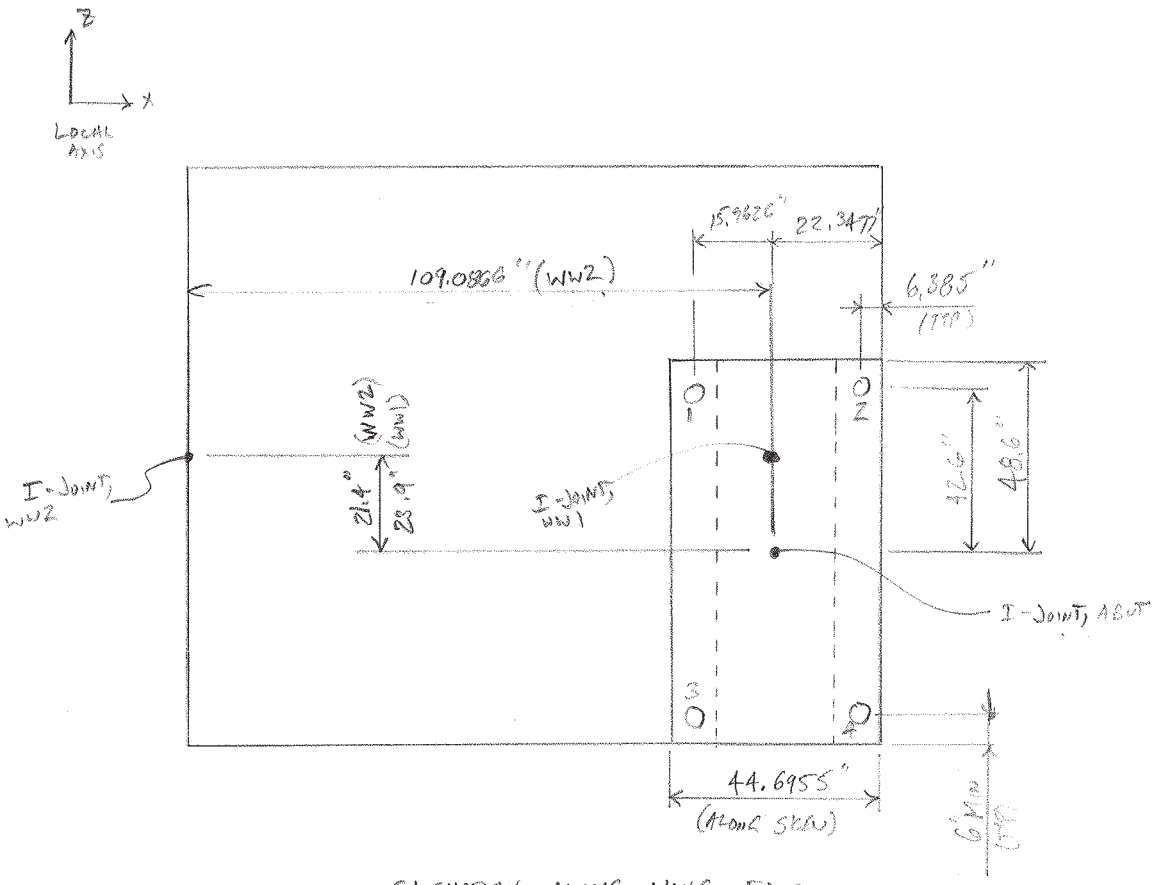

ELEVATION ALONG WING FACE

WINGWALL 2 CORNER DUCT COORDS

① = (x, y, z) = (93.124, 0, 21.2)

② = (125.0492, 0, 21.2)

③ = (93.124, 0, -64)

④ = (125.0492, 0, -64)

WINGWALL 1 CORNER COORDS

① = (15.9626, 0, 18.7)

② = (-15.9626, 0, 18.7)

③ = (15.9626, 0, -66.5)

④ = (-15.9626, 0, -66.5)

MAX # DUCTS PER SIDE = 2(42.6")/9" SPACING = 9.4 SPACES ∴ 10 DUCTS MAX EA. SIDE

NOMINAL, COULD BE CLOSER

TY·LIN INTERNATIONAL

Project: PITTSFIELD	Job No. 411762	Sheet: 4 of 4
Item: LARSA MODEL INPUT	Designer: J. OLUND	Date: 1/7/14
	Checker:	Date:
BOUNDARY CONDITIONS		Grid: 1/10"

→ POINTS 3, 4, 6, 8, 9 SUPPORTED VERTICALLY AND LONGITUDINALLY (FIX Z & Y) → DUE TO PILES & SUPERSTRUCTURE

→ POINTS 5 & 7 SUPPORTED LONGITUDINALLY (FIX Y) → DUE TO SUPERSTRUCTURE

→ FOR NUMERICAL STABILITY, FIX POINT 6 IN ALL TRANSLATIONAL DIRECTIONS

SUPERSTRUCTURE & CLOSURE LOADS:

→ ASSUME LATERAL LOAD FROM MINIMAL CLOSURE POUR IS NEGLIGIBLE AND RAILS WILL BE OPPOSED FROM TEMPORARY CONCRETE FLUIDPRESSURE, THEREBY OFFSETTING & REPLACING APPLIED PLAN FORCE

→ SUPER & SUBSTRUCTURE WEIGHT IS EQUALLY/EVENLY DISTRIBUTED ALONG BRIDGE SEAT

• DEAD LOADS (DC)

NEXT BEAMS ≈ 1.6 KLF EA ∴ $\left(\frac{78'}{2} \cdot 1.6\text{KLF} \cdot 4 \text{ BEAMS}\right) \cdot \frac{1}{40.8'} = 6.12\text{KLF}$

CLOSURES = $(0.75')(0.67') \cdot 0.15\text{KCF} \cdot 3 \cdot \frac{78'}{2} \cdot \frac{1}{40.8'} = 0.22\text{KLF}$

RAILINGS ≈ $2(67\text{ PLF}) \cdot \frac{78'}{2} \cdot \frac{1}{40.8'} = 0.13\text{KLF}$

END DIAPHRAGM ≈ $(35''\text{ TALL}) \cdot (3'\text{ WIDE}) \cdot 0.15\text{KCF} = 1.31\text{ KLF}$

(OMITTING NEXT BEAMS & APP SLAB SEAT)

TOTAL DC = 7.78 KLF

• DEAD LOADS (DW)

WEARING SURFACE = $(38\text{PSF}) \cdot \left(\frac{78'}{2}\right)(32'\text{ROAD}) \cdot \frac{1}{40.8'} = \underline{1.16\text{ KLF}}$

• LIVE LOADS (LL + IM)

$$\left[\underset{(\text{BLANE})}{2} \cdot \underset{(\text{IM})}{1.33} \cdot \underset{(\text{MP})}{1.0} \cdot \left[32^{\text{KIP}} + 32^{\text{KIP}}\left(\frac{64'}{78'}\right) + 8^{\text{KIP}}\left(\frac{50'}{78'}\right)\right] + 2 \cdot 1.0 \cdot \frac{78'}{2} \cdot 640\text{PLF}\right] \cdot \frac{1}{40.8'} = \underline{5.36\text{ KLF}}$$

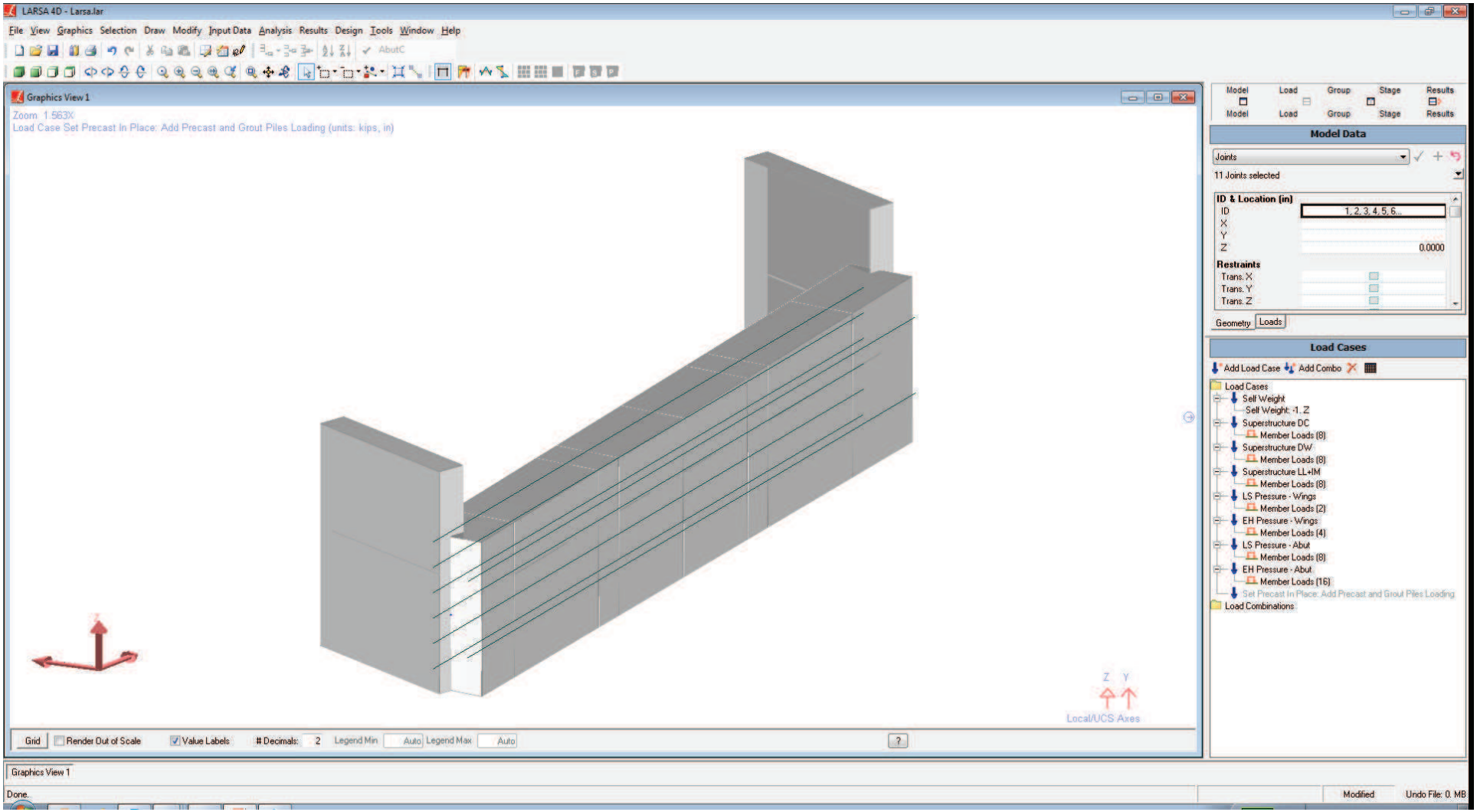
LARSA 4D - Larsa.lar
File View Graphics Selection Draw Modify Input Data Analysis Results Design Tools Window Help
Graphics View 1
Zoom 1.563X
Load Case Set Precast In Place: Add Precast and Grout Piles Loading (units: kips, in)
Model Load Group Stage Results
Model Data
Joints
11 Joints selected
ID & Location (in)
ID 1, 2, 3, 4, 5, 6...
X
Y
Z 0.0000
Restraints
Trans. X
Trans. Y
Trans. Z
Geometry Loads
Load Cases
Add Load Case Add Combo
Load Cases
Self Weight
Self Weight: -1. Z
Superstructure DC
Member Loads (8)
Superstructure DW
Member Loads (8)
Superstructure LL+IM
Member Loads (8)
LS Pressure - Wings
Member Loads (2)
EH Pressure - Wings
Member Loads (4)
LS Pressure - Abut
Member Loads (8)
EH Pressure - Abut
Member Loads (16)
Set Precast In Place: Add Precast and Grout Piles Loading
Load Combinations
Z Y
Local/UCS Axes
Grid Render Out of Scale Value Labels # Decimals: 2 Legend Min Auto Legend Max Auto
Graphics View 1
Done.
Modified
Undo File: 0. MB

INPUT : Material Properties

Name	Modulus of Elasticity (kips/in²)	Poisson Ratio	Shear Modulus (kips/in²)	Unit Weight (kips/in³)	Thermal Expansion (1/ °F *10^-6)	Assigned
Fc_5	4,031.00	0.1704	1,722.00	0.0001	5.500000	Yes
PT Steel	28,500.00	0.2946	11,006.90	0.0003	6.500000	Yes

INPUT : Sections

Name	Section Area (in²)	Shear Area in yy (in²)	Shear Area in zz (in²)	Torsion Constant (in^4)	Inertia Izz (in^4)	Inertia Iyy (in^4)	Plastic Modulus Zyy (in³)	Plastic Modulus Zzz (in³)	Perimeter (in)	Material Time-Effect	Ductility	Residual Strength (%)	Assigned
Wingwall 1	2,610.0000	2,175.0000	2,175.0000	2.5975e5	70,470.0000	4.5729e6	0.0000	0.0000	326.0000	New Time-	50.	0.	Yes
Wingwall 2	2,520.0000	2,100.0000	2,100.0000	2.4993e5	68,040.0000	4.1160e6	0.0000	0.0000	316.0000	New Time-	50.	0.	Yes
Abut 1	4,082.4000	3,402.0000	3,402.0000	1.7396e6	6.0011e5	3.2142e6	0.0000	0.0000	278.4000	New Time-	50.	0.	Yes
Abut 2	4,105.0800	3,420.9000	3,420.9000	1.7530e6	6.0345e5	3.2680e6	0.0000	0.0000	279.4800	New Time-	50.	0.	Yes
Abut 3	4,164.3000	3,470.2500	3,470.2500	1.7882e6	6.1215e5	3.4115e6	0.0000	0.0000	282.3000	New Time-	50.	0.	Yes
Abut 4	4,178.5800	3,482.1500	3,482.1500	1.7967e6	6.1425e5	3.4467e6	0.0000	0.0000	282.9800	New Time-	50.	0.	Yes
Abut 5	4,223.9400	3,519.9500	3,519.9500	1.8239e6	6.2092e5	3.5602e6	0.0000	0.0000	285.1400	New Time-	50.	0.	Yes
Abut 6	4,268.8800	3,557.4000	3,557.4000	1.8509e6	6.2753e5	3.6750e6	0.0000	0.0000	287.2800	New Time-	50.	0.	Yes
Abut 7	4,283.1600	3,569.3000	3,569.3000	1.8596e6	6.2962e5	3.7120e6	0.0000	0.0000	287.9600	New Time-	50.	0.	Yes
Abut 8	4,342.8000	3,619.0000	3,619.0000	1.8958e6	6.3839e5	3.8693e6	0.0000	0.0000	290.8000	New Time-	50.	0.	Yes
Abut 9	4,384.8000	3,654.0000	3,654.0000	1.9215e6	6.4457e5	3.9826e6	0.0000	0.0000	292.8000	New Time-	50.	0.	Yes

INPUT : Section Stress Points

Name	Point 1 Y (in)	Point 1 Z (in)	Point 2 Y (in)	Point 2 Z (in)	Point 3 Y (in)	Point 3 Z (in)	Point 4 Y (in)	Point 4 Z (in)	Point 5 Y (in)	Point 5 Z (in)	Point 6 Y (in)	Point 6 Z (in)
Wingwall 1	9.0000	72.5000	9.0000	-72.5000	-9.0000	-72.5000	-9.0000	72.5000	(NONE)	(NONE)	(NONE)	(NONE)
Wingwall 2	9.0000	70.0000	9.0000	-70.0000	-9.0000	-70.0000	-9.0000	70.0000	(NONE)	(NONE)	(NONE)	(NONE)
Abut 1	21.0000	48.6000	21.0000	-48.6000	-21.0000	-48.6000	-21.0000	48.6000	(NONE)	(NONE)	(NONE)	(NONE)
Abut 2	21.0000	48.8700	21.0000	-48.8700	-21.0000	-48.8700	-21.0000	48.8700	(NONE)	(NONE)	(NONE)	(NONE)
Abut 3	21.0000	49.5750	21.0000	-49.5750	-21.0000	-49.5750	-21.0000	49.5750	(NONE)	(NONE)	(NONE)	(NONE)
Abut 4	21.0000	49.7450	21.0000	-49.7450	-21.0000	-49.7450	-21.0000	49.7450	(NONE)	(NONE)	(NONE)	(NONE)
Abut 5	21.0000	50.2850	21.0000	-50.2850	-21.0000	-50.2850	-21.0000	50.2850	(NONE)	(NONE)	(NONE)	(NONE)
Abut 6	21.0000	50.8200	21.0000	-50.8200	-21.0000	-50.8200	-21.0000	50.8200	(NONE)	(NONE)	(NONE)	(NONE)
Abut 7	21.0000	50.9900	21.0000	-50.9900	-21.0000	-50.9900	-21.0000	50.9900	(NONE)	(NONE)	(NONE)	(NONE)
Abut 8	21.0000	51.7000	21.0000	-51.7000	-21.0000	-51.7000	-21.0000	51.7000	(NONE)	(NONE)	(NONE)	(NONE)

INPUT : Section Stress Points

Name	Point 1 Y (in)	Point 1 Z (in)	Point 2 Y (in)	Point 2 Z (in)	Point 3 Y (in)	Point 3 Z (in)	Point 4 Y (in)	Point 4 Z (in)	Point 5 Y (in)	Point 5 Z (in)	Point 6 Y (in)	Point 6 Z (in)
Abut 9	21.0000	52.2000	21.0000	-52.2000	-21.0000	-52.2000	-21.0000	52.2000	(NONE)	(NONE)	(NONE)	(NONE)

INPUT : Section Dimensions

Name	Shape	Dimension D1	Dimension D2	Dimension D3	Dimension D4	Dimension D5	Dimension D6
Wingwall 1	Rectangle	18.0000	145.0000				
Wingwall 2	Rectangle	18.0000	140.0000				
Abut 1	Rectangle	42.0000	97.2000				
Abut 2	Rectangle	42.0000	97.7400				
Abut 3	Rectangle	42.0000	99.1500				
Abut 4	Rectangle	42.0000	99.4900				
Abut 5	Rectangle	42.0000	100.5700				
Abut 6	Rectangle	42.0000	101.6400				
Abut 7	Rectangle	42.0000	101.9800				
Abut 8	Rectangle	42.0000	103.4000				
Abut 9	Rectangle	42.0000	104.4000				

INPUT : Joints

ID	X (in)	Y (in)	Z (in)	Translation DOF	Rotation DOF	Displacement UCS	Assignment
1	37.3140	102.5064	0.0000	all free	all free	Global	Yes
2	0.0000	0.0000	0.0000	all free	all free	Global	Yes
3	37.8276	0.0000	0.0000	y, z fixed	x fixed	Global	Yes
4	137.5032	0.0000	0.0000	y, z fixed	x fixed	Global	Yes
5	161.5032	0.0000	0.0000	y fixed	all free	Global	Yes
6	237.8280	0.0000	0.0000	all fixed	x fixed	Global	Yes
7	313.8276	0.0000	0.0000	y fixed	all free	Global	Yes
8	337.8276	0.0000	0.0000	y, z fixed	x fixed	Global	Yes
9	437.8272	0.0000	0.0000	y, z fixed	x fixed	Global	Yes
10	508.7796	0.0000	0.0000	all free	all free	Global	Yes
11	548.1456	108.1572	0.0000	all free	all free	Global	Yes

INPUT : Members

ID	I-Joint	J-Joint	Span	Type	Section at Start	Section at End	Material	Prestress Force (kips)	Length (in)	Rigid Zone from Start (x/L)	Rigid Zone from End (x/L)	Orientation Angle (deg)	Casting (day)	Structure Group
1	1	2	-	Beam	Wingwall 2	Wingwall 2	Fc_5	0.0000	109.0866	0.0000	0.0000	0.0000	1	Wing2
2	2	3	-	Beam	Abut 1	Abut 2	Fc_5	0.0000	37.8285	0.0000	0.0000	0.0000	7	AbutA
3	3	4	-	Beam	Abut 2	Abut 3	Fc_5	0.0000	99.6781	0.0000	0.0000	0.0000	7	AbutA
4	4	5	-	Beam	Abut 3	Abut 4	Fc_5	0.0000	24.0006	0.0000	0.0000	0.0000	7	AbutA
5	5	6	-	Beam	Abut 4	Abut 5	Fc_5	0.0000	76.3267	0.0000	0.0000	0.0000	14	AbutB
6	6	7	-	Beam	Abut 5	Abut 6	Fc_5	0.0000	76.0015	0.0000	0.0000	0.0000	14	AbutB
7	7	8	-	Beam	Abut 6	Abut 7	Fc_5	0.0000	24.0006	0.0000	0.0000	0.0000	7	AbutC
8	8	9	-	Beam	Abut 7	Abut 8	Fc_5	0.0000	100.0021	0.0000	0.0000	0.0000	7	AbutC
9	9	10	-	Beam	Abut 8	Abut 9	Fc_5	0.0000	70.9542	0.0000	0.0000	0.0000	7	AbutC
10	10	11	-	Beam	Wingwall 1	Wingwall 1	Fc_5	0.0000	115.0985	0.0000	0.0000	0.0000	1	Wing1

INPUT : Member End Offsets

ID	I-Offset X (in)	I-Offset Y (in)	I-Offset Z (in)	J-Offset X (in)	J-Offset Y (in)	J-Offset Z (in)
1	0.0000	0.0000	21.4000	0.0000	0.0000	21.4000
2	0.0000	0.0000	0.0000	0.0000	0.0000	0.2677
3	0.0000	0.0000	0.2677	0.0000	0.0000	0.9729
4	0.0000	0.0000	0.9729	0.0000	0.0000	1.1428
5	0.0000	0.0000	1.1428	0.0000	0.0000	1.6828
6	0.0000	0.0000	1.6828	0.0000	0.0000	2.2206
7	0.0000	0.0000	2.2206	0.0000	0.0000	2.3904
8	0.0000	0.0000	2.3904	0.0000	0.0000	3.0980
9	0.0000	0.0000	3.0980	0.0000	0.0000	3.6000
10	0.0000	0.0000	23.9000	0.0000	0.0000	23.9000

INPUT : Tendons

Tendon Name	Design Group	Material	Exposure	Strand Area (per strand)	# of Strands	Jacking Force @ Start	Jacking Force @ End	Jacking End	Anchor Set (in)	Wobble Coefficient	Curvature Friction Coefficie	Peak Stress Ratio -	Peak Stress Ratio -	Elongation After	Elongation After	Elongation @ Left of	Elongation @ Right of
New Tendon	(none)	PT Steel	Post-Tension	0.2170	1	44	42.0000	End	0.2500	0.0002	0.2300	0.8000	0.8000	3.2852	0	0	0
New Tendon	(none)	PT Steel	Post-Tension	0.2170	1	44	42.0000	End	0.2500	0.0002	0.2300	0.8000	0.8000	3.4096	0	0	0
New Tendon	(none)	PT Steel	Post-Tension	0.2170	1	44	42.0000	End	0.2500	0.0002	0.2300	0.8000	0.8000	3.4117	0	0	0

INPUT : Tendons

Tendon Name	Design Group	Material	Exposure	Strand Area (per strand)	# of Strands	Jacking Force @ Start	Jacking Force @ End	Jacking End	Anchor Set (in)	Wobble Coefficient	Curvature Friction Coefficie	Peak Stress Ratio -	Peak Stress Ratio -	Elongation After	Elongation After	Elongation @ Left of	Elongation @ Right of
New Tendon	(none)	PT Steel	Post-Tension	0.2170	1	44	42.0000	End	0.2500	0.0002	0.2300	0.8000	0.8000	3.2852	0	0	0
New Tendon	(none)	PT Steel	Post-Tension	0.2170	1	44	42.0000	End	0.2500	0.0002	0.2300	0.8000	0.8000	3.2852	0	0	0
New Tendon	(none)	PT Steel	Post-Tension	0.2170	1	44	42.0000	End	0.2500	0.0002	0.2300	0.8000	0.8000	3.2852	0	0	0
New Tendon	(none)	PT Steel	Post-Tension	0.2170	1	44	42.0000	End	0.2500	0.0002	0.2300	0.8000	0.8000	3.2852	0	0	0
New Tendon	(none)	PT Steel	Post-Tension	0.2170	1	44	42.0000	End	0.2500	0.0002	0.2300	0.8000	0.8000	3.2852	0	0	0

INPUT : More Material Properties

Name	Yield Stress (kips/in²)	Post-yield to Initial Slope Ratio	Concrete Strength Specimen	Concrete fc28 or Steel Fu (kips/in²)	Concrete Cement Hardening Type	Tendon GUTS (kips/in²)	Material Time-Effect	Assigned
Fc_5	0.00	0.020	Cylinder	5.00	Normal	0.00	New Time-Dep Property	Yes
PT Steel	243.00	0.020	Cylinder	270.00	Not Concrete	270.00	(NONE)	Yes

INPUT : CEB-FIP 90

Name	Creep Factor	Shrinkage Factor	Relaxation Factor	Steel Relaxation Type	Assigned
New Time-Dep Property	1.0000	1.0000	1.0000	Improved(Class 2)	Yes

TENDON New Tendon 1

Point Type	Reference Object Type	Reference Object or Range	Offset X (in)	Offset Y (in)	Offset Z (in)	X Reference	Y Reference	Z Reference	Curvature Type			Width
geometry	member	1	93.1240	0.0000	19.0000	Start	Reference Line	Reference Line	No Curve			
path only	member	2-9										
geometry	member	10	15.9626	0.0000	16.5000	Start	Reference Line	Reference Line	No Curve			

TENDON New Tendon 7

Point Type	Reference Object Type	Reference Object or Range	Offset X (in)	Offset Y (in)	Offset Z (in)	X Reference	Y Reference	Z Reference	Curvature Type			Width
geometry	member	1	125.0495	0.0000	3.0000	Start	Reference Line	Reference Line	No Curve			
path only	member	2-10										
geometry	member	9	-15.0000	-15.0000	20.6944	End	Reference Line	Reference Line	No Curve			

TENDON New Tendon 8

Point Type	Reference Object Type	Reference Object or Range	Offset X (in)	Offset Y (in)	Offset Z (in)	X Reference	Y Reference	Z Reference	Curvature Type			Width
geometry	member	1	125.0495	0.0000	-45.0000	Start	Reference Line	Reference Line	No Curve			
path only	member	2-10										
geometry	member	9	-15.0000	-15.0000	-27.3068	End	Reference Line	Reference Line	No Curve			

TENDON New Tendon 2

Point Type	Reference Object Type	Reference Object or Range	Offset X (in)	Offset Y (in)	Offset Z (in)	X Reference	Y Reference	Z Reference	Curvature Type			Width
geometry	member	1	93.1240	0.0000	3.0000	Start	Reference Line	Reference Line	No Curve			
path only	member	2-9										
geometry	member	10	15.9626	0.0000	0.5000	Start	Reference Line	Reference Line	No Curve			

TENDON New Tendon 3

Point Type	Reference Object Type	Reference Object or Range	Offset X (in)	Offset Y (in)	Offset Z (in)	X Reference	Y Reference	Z Reference	Curvature Type			Width
geometry	member	1	93.1240	0.0000	-13.0000	Start	Reference Line	Reference Line	No Curve			
path only	member	2-9										
geometry	member	10	15.9626	0.0000	-15.5000	Start	Reference Line	Reference Line	No Curve			

TENDON New Tendon 4

Point Type	Reference Object Type	Reference Object or Range	Offset X (in)	Offset Y (in)	Offset Z (in)	X Reference	Y Reference	Z Reference	Curvature Type			Width
geometry	member	1	93.1240	0.0000	-29.0000	Start	Reference Line	Reference Line	No Curve			
path only	member	2-9										
geometry	member	10	15.9626	0.0000	-31.5000	Start	Reference Line	Reference Line	No Curve			

TENDON New Tendon 5

Point Type	Reference Object Type	Reference Object or Range	Offset X (in)	Offset Y (in)	Offset Z (in)	X Reference	Y Reference	Z Reference	Curvature Type			Width
geometry	member	1	93.1240	0.0000	-45.0000	Start	Reference Line	Reference Line	No Curve			
path only	member	2-9										

TENDON New Tendon 5

Point Type	Reference Object Type	Reference Object or Range	Offset X (in)	Offset Y (in)	Offset Z (in)	X Reference	Y Reference	Z Reference	Curvature Type			Width
geometry	member	10	15.9626	0.0000	-47.5000	Start	Reference Line	Reference Line	No Curve			

TENDON New Tendon 6

Point Type	Reference Object Type	Reference Object or Range	Offset X (in)	Offset Y (in)	Offset Z (in)	X Reference	Y Reference	Z Reference	Curvature Type			Width
geometry	member	1	93.1240	0.0000	-61.0000	Start	Reference Line	Reference Line	No Curve			
path only	member	2-9										
geometry	member	10	15.9626	0.0000	-63.5000	Start	Reference Line	Reference Line	No Curve			

TENDON New Tendon 1, Graph

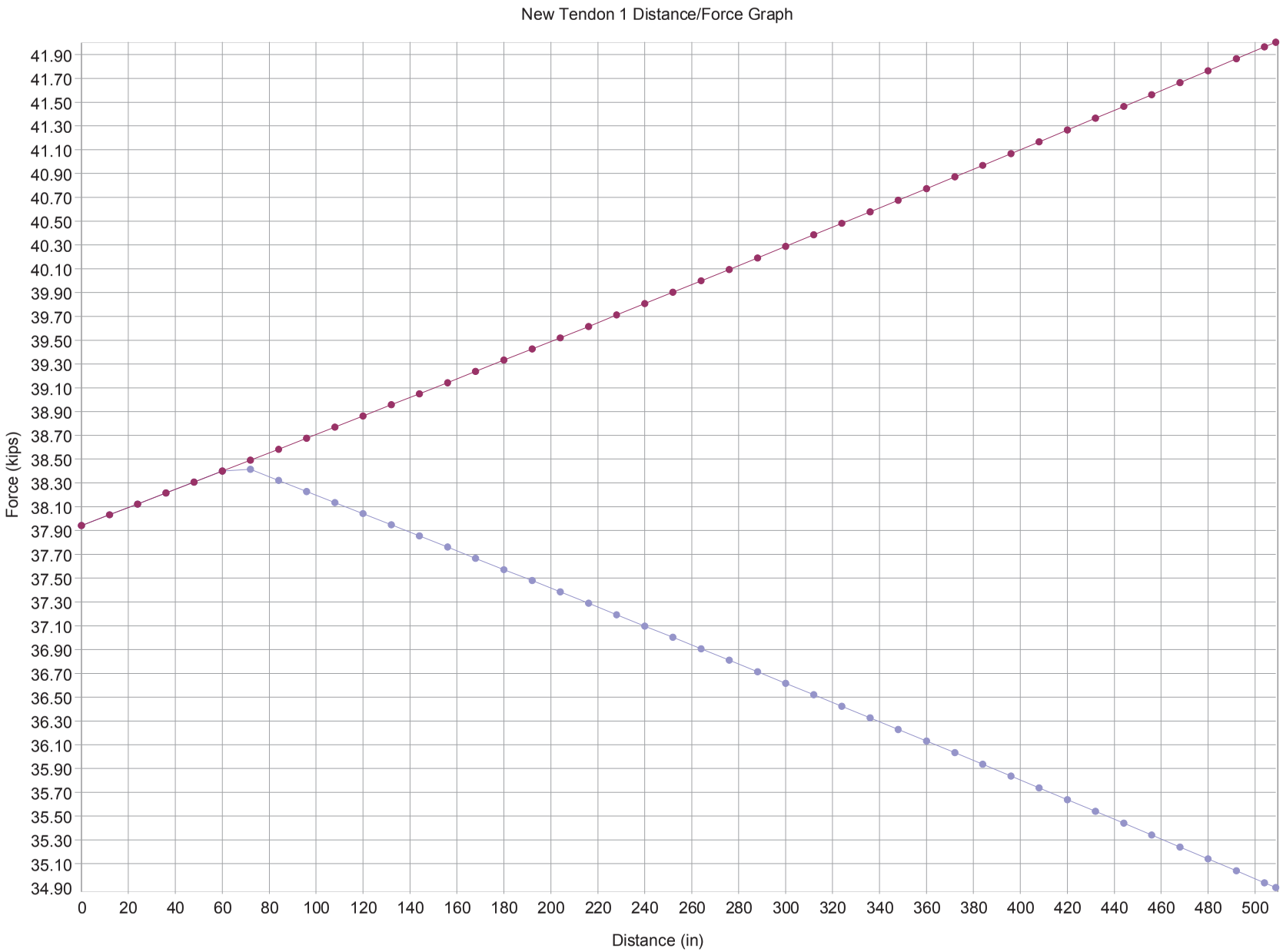

TENDON New Tendon 7, Graph

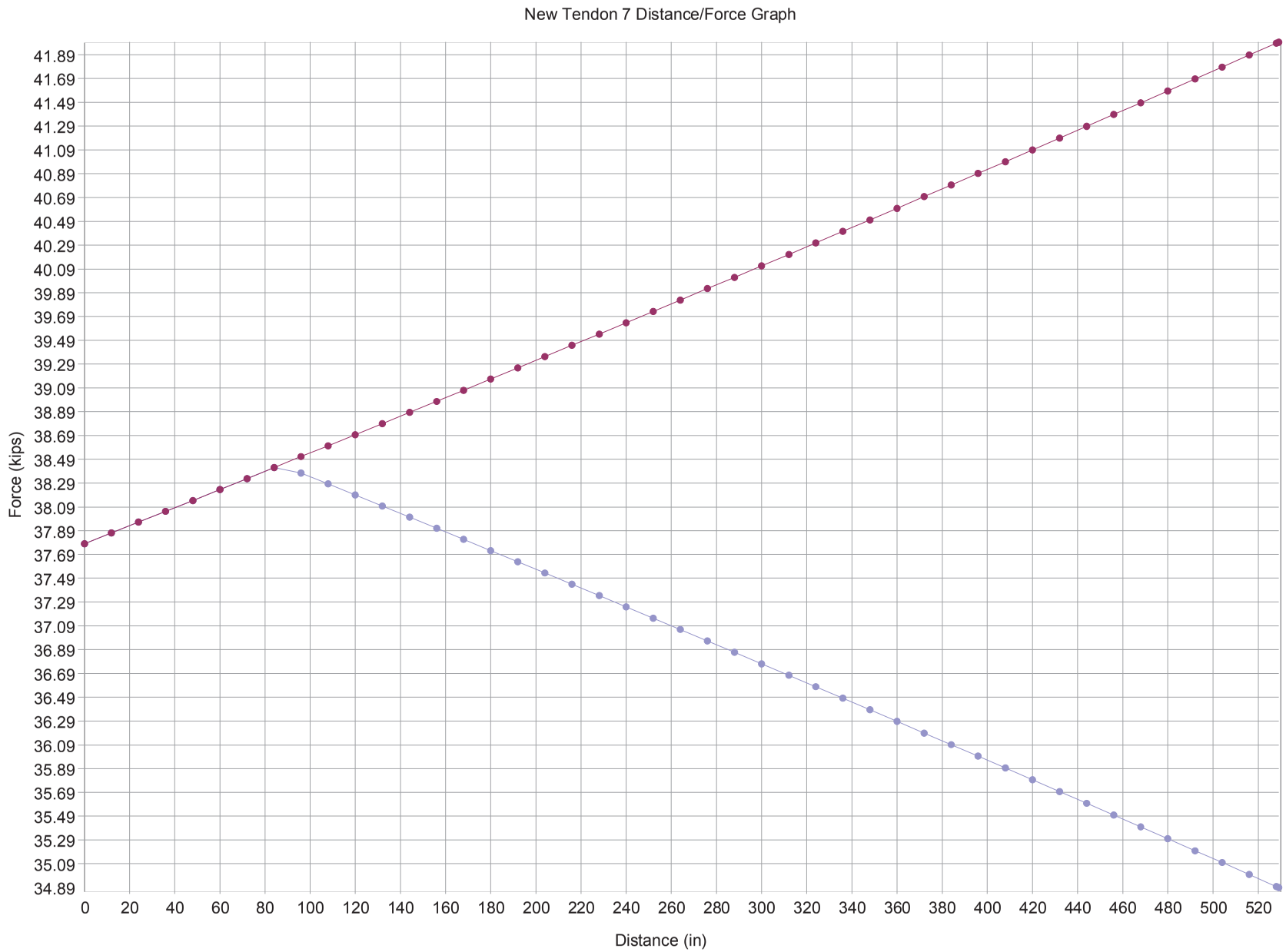

TENDON New Tendon 8, Graph

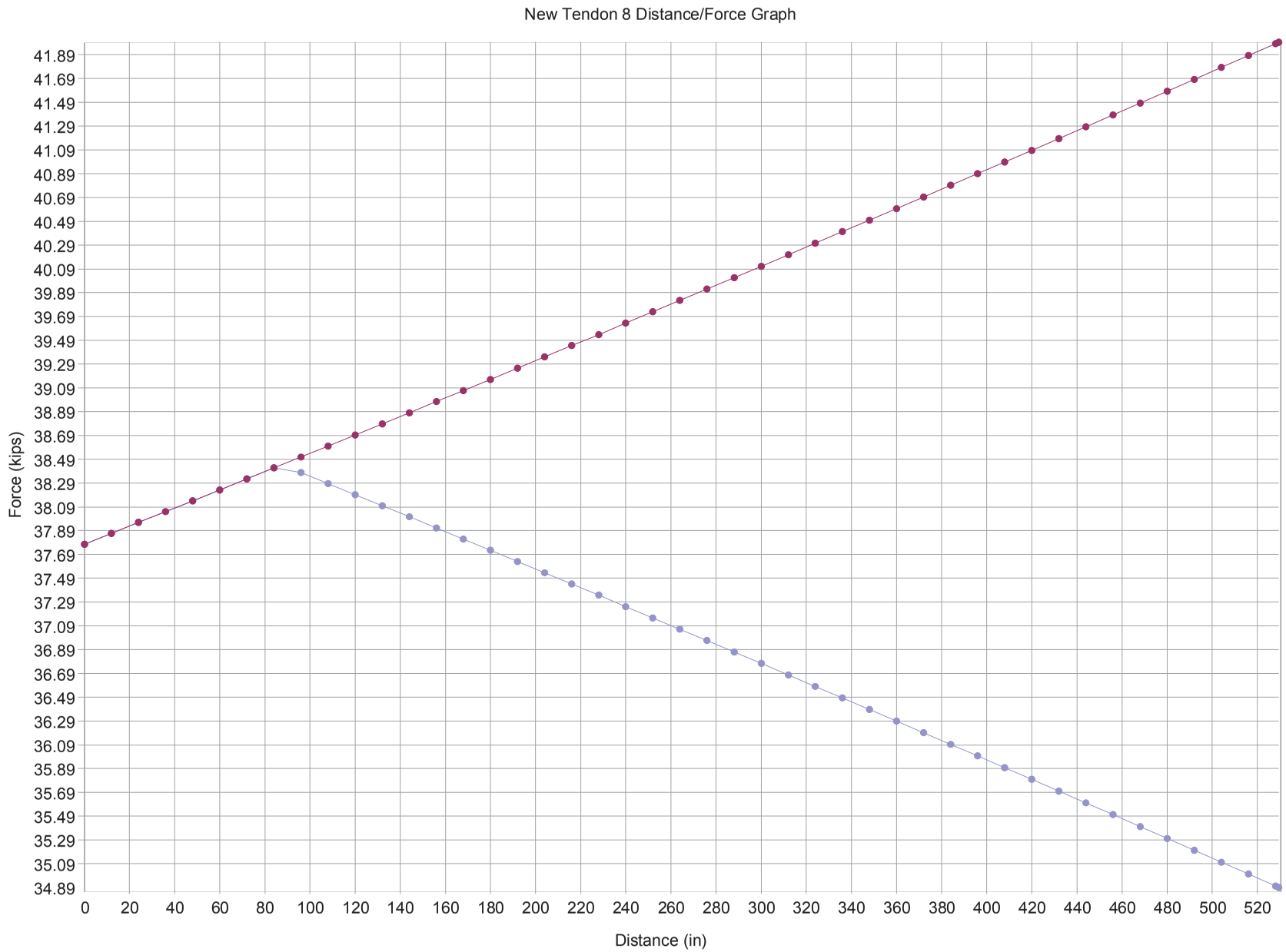

TENDON New Tendon 2, Graph

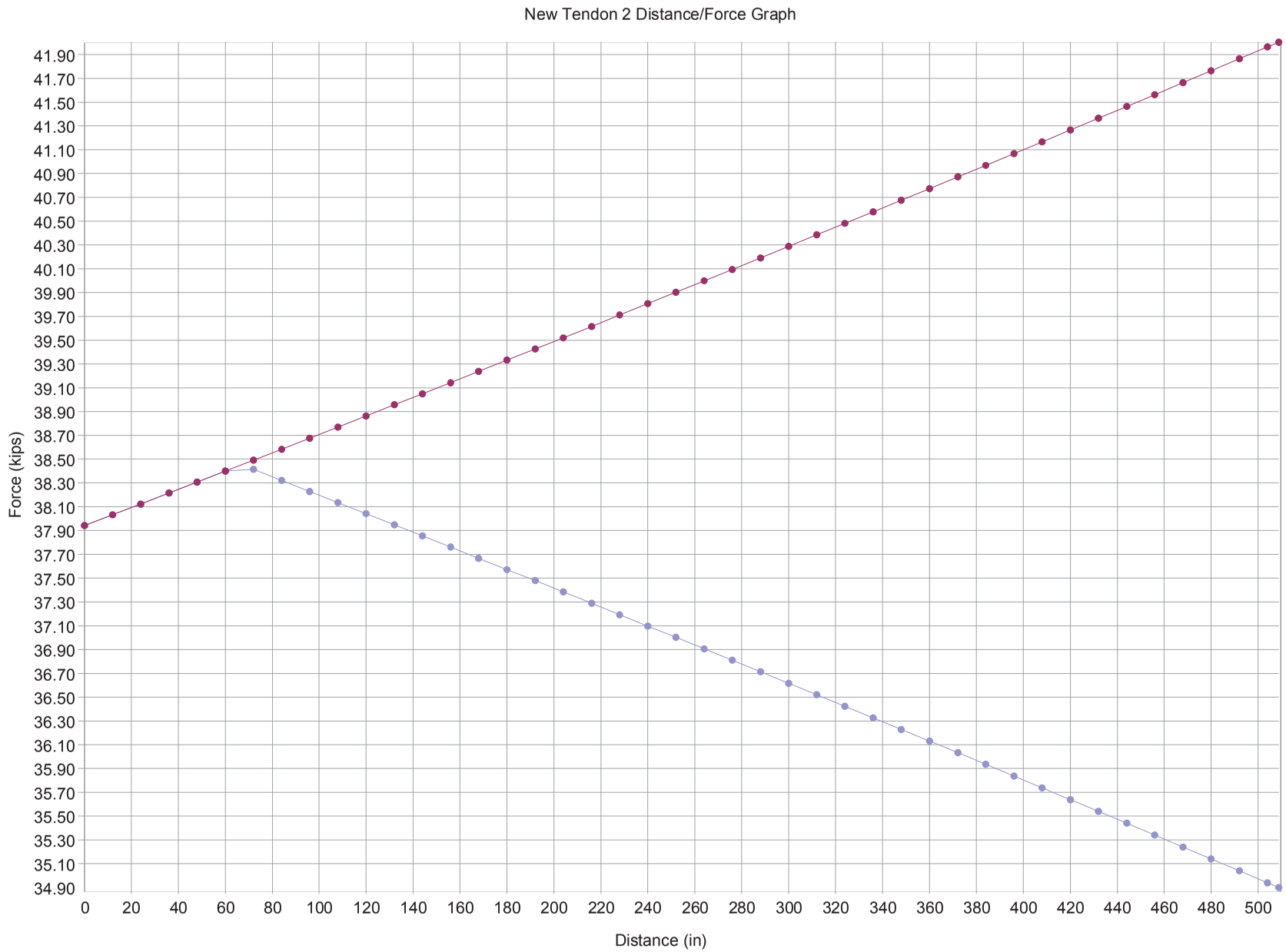

TENDON New Tendon 3, Graph

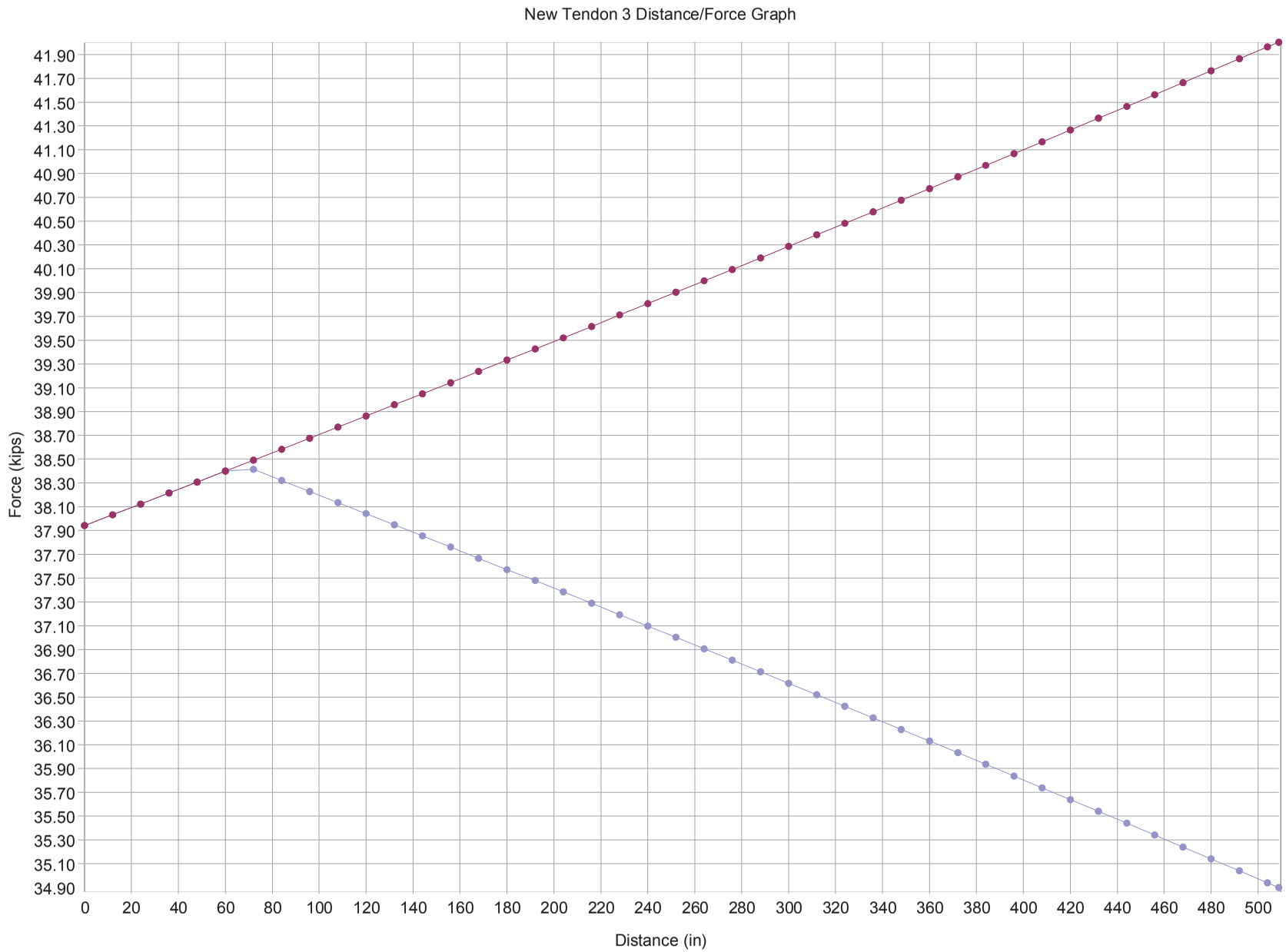

TENDON New Tendon 4, Graph

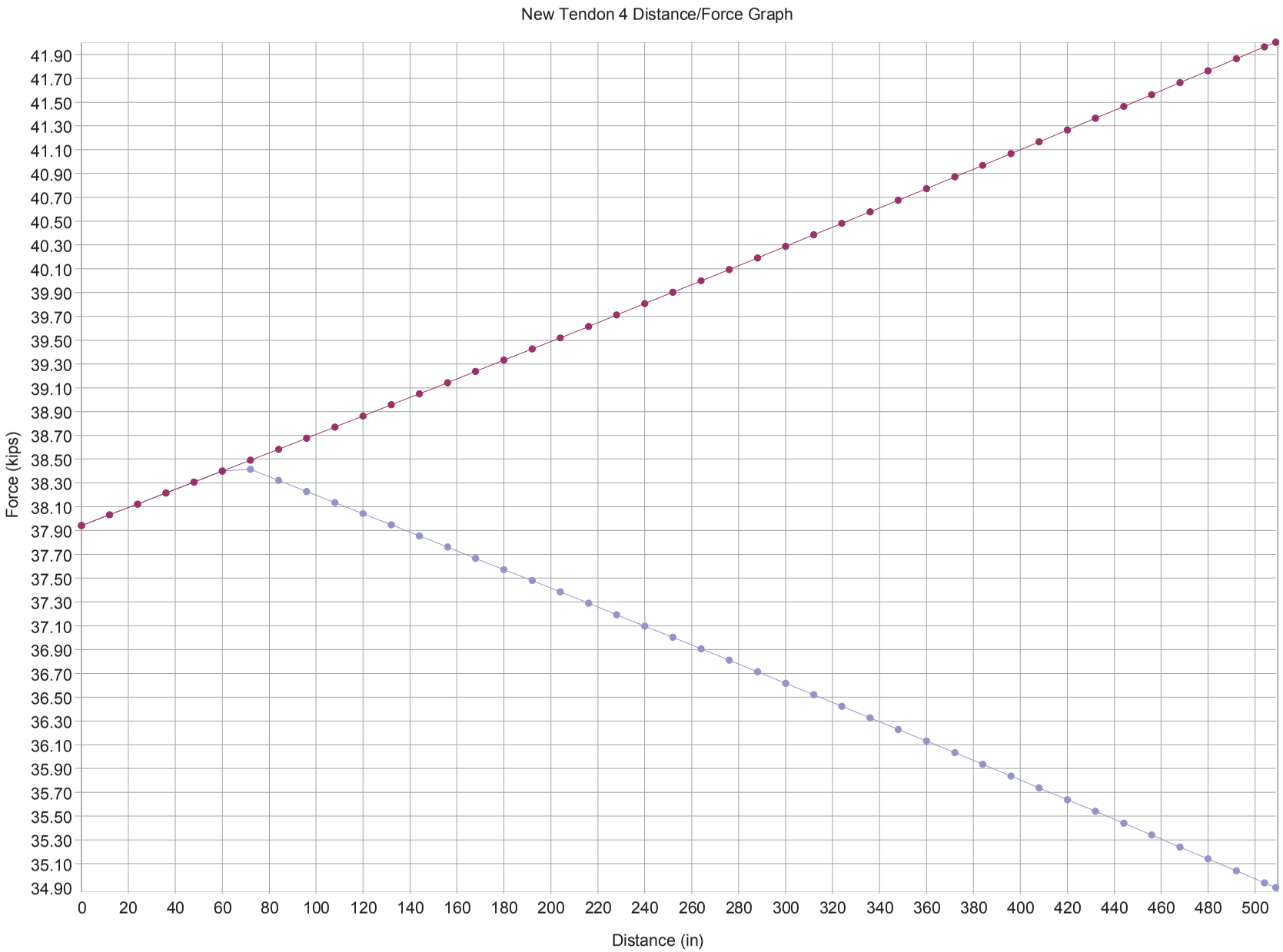

TENDON New Tendon 5, Graph

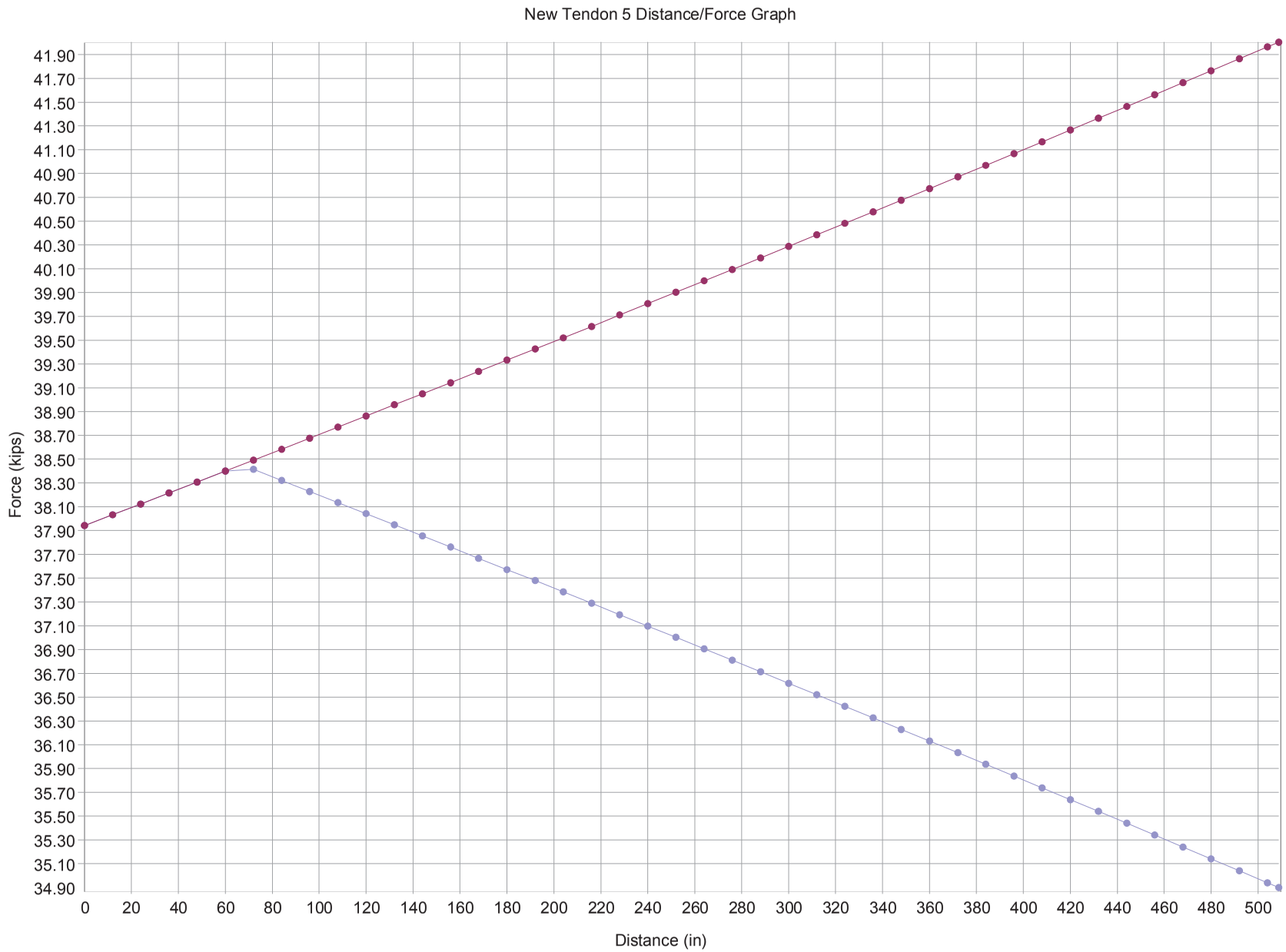

TENDON New Tendon 6, Graph

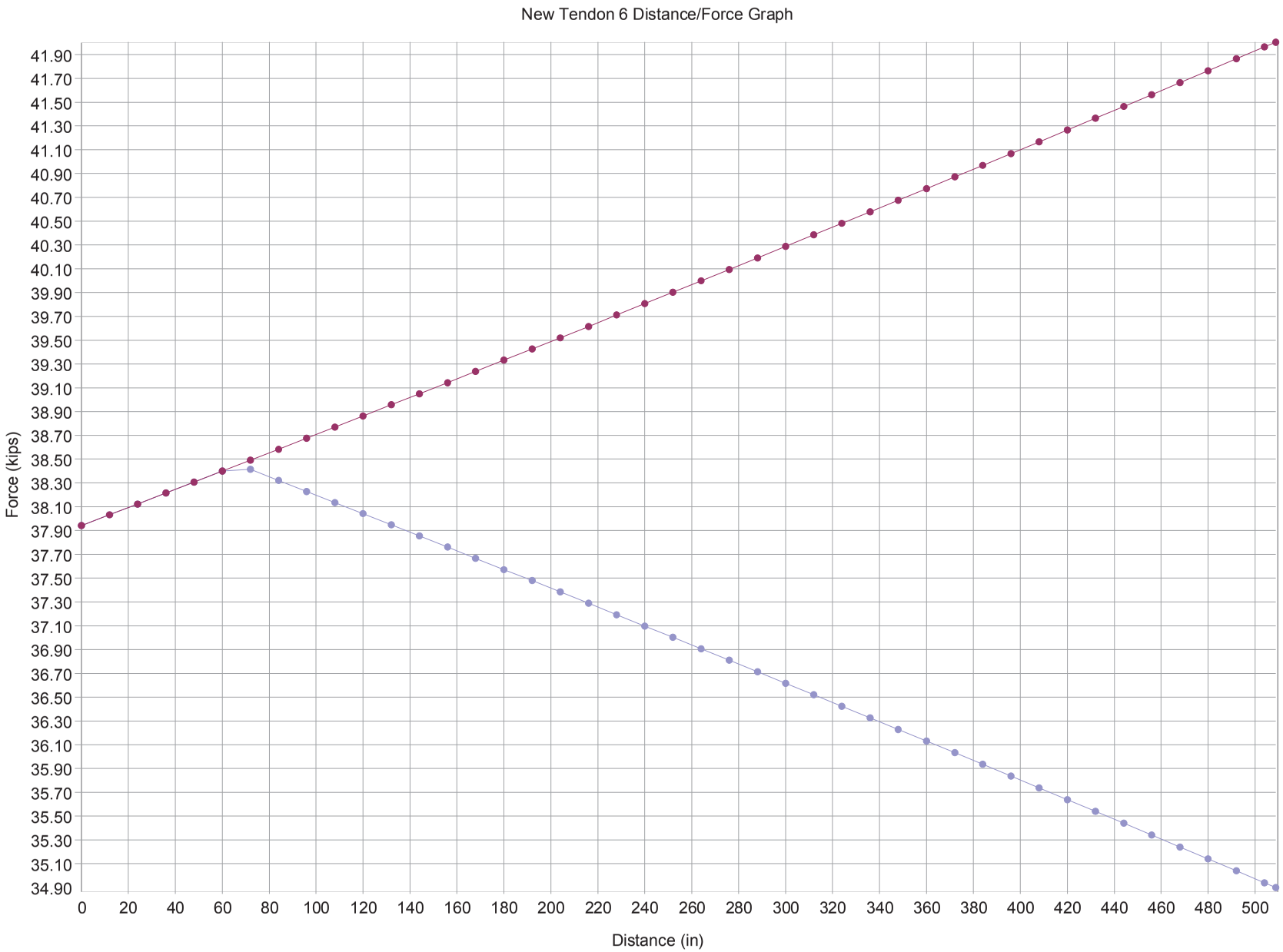

Load Cases

ID	Name	Analysis Type	Class	Status	Weight Factor X	Weight Factor Y	Weight Factor Z	Is Dynamic Mass?	Assigned to Load Combinati	# of Joint Loads	# of Support Loads	# of Member Loads	# of Member	# of Plate Loads	# of Moving Loads	# of THA Loading	# of THA Initial
1	Self Weight	Static	None	Activ	0.0000	0.0000	-1.0000	No	Yes	0	0	0	0	0	0	0	0
2	Superstructure DC	Static	Dead Load	Activ	0.0000	0.0000	0.0000	No	Yes	0	0	8	0	0	0	0	0
3	Superstructure DW	Static	Dead Load	Activ	0.0000	0.0000	0.0000	No	Yes	0	0	8	0	0	0	0	0
4	Superstructure LL+IM	Static	Dead Load	Activ	0.0000	0.0000	0.0000	No	Yes	0	0	8	0	0	0	0	0
5	LS Pressure - Wings	Static	Live Load	Activ	0.0000	0.0000	0.0000	No	Yes	0	0	2	0	0	0	0	0
6	EH Pressure - Wings	Static	Earth Pressure	Activ	0.0000	0.0000	0.0000	No	Yes	0	0	4	0	0	0	0	0
7	LS Pressure - Abut	Static	Live Load	Activ	0.0000	0.0000	0.0000	No	Yes	0	0	8	0	0	0	0	0
8	EH Pressure - Abut	Static	Earth Pressure	Activ	0.0000	0.0000	0.0000	No	Yes	0	0	16	0	0	0	0	0
9	Set Precast In Place: Add	Static	None	Inacti	0.0000	0.0000	0.0000	No	No	0	0	0	0	0	0	0	0

LOAD CASE Superstructure DC, Member Loads

Member	Type	Direction	Magnitude at Start (kips or kips-in)	Magnitude at End (kips or kips-in)	Start Position (x/L)	End Position from start (x/L)
2	Uniform Force	Global Z	-0.6480		0.0000	1.0000
3	Uniform Force	Global Z	-0.6480		0.0000	1.0000
4	Uniform Force	Global Z	-0.6480		0.0000	1.0000
5	Uniform Force	Global Z	-0.6480		0.0000	1.0000
6	Uniform Force	Global Z	-0.6480		0.0000	1.0000
7	Uniform Force	Global Z	-0.6480		0.0000	1.0000
8	Uniform Force	Global Z	-0.6480		0.0000	1.0000
9	Uniform Force	Global Z	-0.6480		0.0000	1.0000

LOAD CASE Superstructure DW, Member Loads

Member	Type	Direction	Magnitude at Start (kips or kips-in)	Magnitude at End (kips or kips-in)	Start Position (x/L)	End Position from start (x/L)
2	Uniform Force	Global Z	-0.0960		0.0000	1.0000
3	Uniform Force	Global Z	-0.0960		0.0000	1.0000
4	Uniform Force	Global Z	-0.0960		0.0000	1.0000
5	Uniform Force	Global Z	-0.0960		0.0000	1.0000
6	Uniform Force	Global Z	-0.0960		0.0000	1.0000
7	Uniform Force	Global Z	-0.0960		0.0000	1.0000

LOAD CASE Superstructure DW, Member Loads

Member	Type	Direction	Magnitude at Start (kips or kips-in)	Magnitude at End (kips or kips-in)	Start Position (x/L)	End Position from start (x/L)
8	Uniform Force	Global Z	-0.0960		0.0000	1.0000
9	Uniform Force	Global Z	-0.0960		0.0000	1.0000

LOAD CASE Superstructure LL+IM, Member Loads

Member	Type	Direction	Magnitude at Start (kips or kips-in)	Magnitude at End (kips or kips-in)	Start Position (x/L)	End Position from start (x/L)
2	Uniform Force	Global Z	-0.4460		0.0000	1.0000
3	Uniform Force	Global Z	-0.4460		0.0000	1.0000
4	Uniform Force	Global Z	-0.4460		0.0000	1.0000
5	Uniform Force	Global Z	-0.4460		0.0000	1.0000
6	Uniform Force	Global Z	-0.4460		0.0000	1.0000
7	Uniform Force	Global Z	-0.4460		0.0000	1.0000
8	Uniform Force	Global Z	-0.4460		0.0000	1.0000
9	Uniform Force	Global Z	-0.4460		0.0000	1.0000

LOAD CASE LS Pressure - Wings, Member Loads

Member	Type	Direction	Magnitude at Start (kips or kips-in)	Magnitude at End (kips or kips-in)	Start Position (x/L)	End Position from start (x/L)
1	Uniform Force	Local y	-0.1200		0.0000	0.8000
10	Uniform Force	Local y	-0.1240		0.1900	1.0000

LOAD CASE EH Pressure - Wings, Member Loads

Member	Type	Direction	Magnitude at Start (kips or kips-in)	Magnitude at End (kips or kips-in)	Start Position (x/L)	End Position from start (x/L)
1	Uniform Force	Local y	-0.3500		0.0000	0.8000
1	Uniform Moment	Local x	-8.1700		0.0000	0.8000
10	Uniform Force	Local y	-0.3750		0.1900	1.0000
10	Uniform Moment	Local x	-9.0700		0.1900	1.0000

LOAD CASE LS Pressure - Abut, Member Loads

Member	Type	Direction	Magnitude at Start (kips or kips-in)	Magnitude at End (kips or kips-in)	Start Position (x/L)	End Position from start (x/L)
2	Trapezoidal Force	Local y	-1.0200	-1.0200	0.2500	1.0000
3	Trapezoidal Force	Local y	-1.0200	-1.0200	0.0000	1.0000
4	Trapezoidal Force	Local y	-1.0200	-1.0300	0.0000	1.0000
5	Trapezoidal Force	Local y	-1.0300	-1.0400	0.0000	1.0000
6	Trapezoidal Force	Local y	-1.0400	-1.0400	0.0000	1.0000
7	Trapezoidal Force	Local y	-1.0400	-1.0500	0.0000	1.0000
8	Trapezoidal Force	Local y	-1.0500	-1.0600	0.0000	1.0000
9	Trapezoidal Force	Local y	-1.0600	-1.0600	0.0000	0.8600

LOAD CASE EH Pressure - Abut, Member Loads

Member	Type	Direction	Magnitude at Start (kips or kips-in)	Magnitude at End (kips or kips-in)	Start Position (x/L)	End Position from start (x/L)
2	Trapezoidal Force	Local y	-2.6300	-2.6300	0.2500	1.0000
3	Trapezoidal Force	Local y	-2.6300	-2.6300	0.0000	1.0000
4	Trapezoidal Force	Local y	-2.6300	-2.6600	0.0000	1.0000
5	Trapezoidal Force	Local y	-2.6600	-2.7100	0.0000	1.0000
6	Trapezoidal Force	Local y	-2.7100	-2.7600	0.0000	1.0000
7	Trapezoidal Force	Local y	-2.7600	-2.8100	0.0000	1.0000
8	Trapezoidal Force	Local y	-2.8100	-2.8400	0.0000	1.0000
9	Trapezoidal Force	Local y	-2.8400	-2.8400	0.0000	0.8600
2	Trapezoidal Moment	Local x	-27.6800	-27.6800	0.2500	1.0000
3	Trapezoidal Moment	Local x	-27.6800	-27.6800	0.0000	1.0000
4	Trapezoidal Moment	Local x	-27.6800	-28.1500	0.0000	1.0000
5	Trapezoidal Moment	Local x	-28.1500	-29.1200	0.0000	1.0000
6	Trapezoidal Moment	Local x	-29.1200	-30.2200	0.0000	1.0000
7	Trapezoidal Moment	Local x	-30.2200	-31.2300	0.0000	1.0000
8	Trapezoidal Moment	Local x	-31.2300	-31.7500	0.0000	1.0000
9	Trapezoidal Moment	Local x	-31.7500	-31.7500	0.0000	0.8600

Stage Summary

Stage 1 'Set Precast In Place' Day = 42 Temp = 72°F Rel Hum = 80 %

Step 1 : Add Supports

No Construction activity

Support Activity

1	Free	Free	Free	Free	Free	Free
2	Free	Free	Free	Free	Free	Free
3	Free	Fixed	Fixed	Fixed	Free	Free
4	Free	Fixed	Fixed	Fixed	Free	Free
5	Free	Fixed	Free	Free	Free	Free
6	Fixed	Fixed	Fixed	Fixed	Free	Free
7	Free	Fixed	Free	Free	Free	Free
8	Free	Fixed	Fixed	Fixed	Free	Free
9	Free	Fixed	Fixed	Fixed	Free	Free
10	Free	Free	Free	Free	Free	Free
11	Free	Free	Free	Free	Free	Free

NO Slave/Master Activity.

NO Tendon Activity.

NO Displacement Initialization Activity.

NO Load Activity.

Step 2 : Add Precast and Grout Piles

Construct Structure Groups

Wing1

Wing2

AbutA

AbutB

AbutC

NO Support Activity.

NO Slave/Master Activity.

NO Tendon Activity.

NO Displacement Initialization Activity.

Load Activity

1 Self Weight 1

Stage 2 'Tension PT' Day = 45 Temp = 72°F Rel Hum = 80 %

Step 1 : Stress All Tendons

No Construction activity

NO Support Activity.

NO Slave/Master Activity.

Tendon Activity

New Tendon 1 Stress

New Tendon 2 Stress

New Tendon 3 Stress

New Tendon 4 Stress

New Tendon 5 Stress

New Tendon 6 Stress

New Tendon 7 Stress

New Tendon 8 Stress

NO Displacement Initialization Activity.

NO Load Activity.

Stage 3 'Add Superstructure' Day = 46 Temp = 72°F Rel Hum = 80 %

Step 1 : DC Loads Only

No Construction activity

NO Support Activity.

NO Slave/Master Activity.

NO Tendon Activity.

NO Displacement Initialization Activity.

Load Activity

2 Superstructure DC 1

Stage 4 'Backfill to Grade' Day = 52 Temp = 72°F Rel Hum = 80 %

Step 1 : Earth Pressure

No Construction activity

NO Support Activity.

NO Slave/Master Activity.

NO Tendon Activity.

NO Displacement Initialization Activity.

Load Activity

8 EH Pressure - Abut 1

6 EH Pressure - Wings 1

Step 2 : Live Load Surcharge

No Construction activity

NO Support Activity.

NO Slave/Master Activity.

NO Tendon Activity.

NO Displacement Initialization Activity.

Load Activity

5 LS Pressure - Wings 0.8

7 LS Pressure - Abut 0.8

Stage 5 'Pave' Day = 53 Temp = 72°F Rel Hum = 80 %

Step 1 : step 1

No Construction activity

NO Support Activity.

NO Slave/Master Activity.

NO Tendon Activity.

NO Displacement Initialization Activity.

Load Activity

3 Superstructure DW 1

Stage 6 'Open Bridge to Traffic' Day = 54 Temp = 72°F Rel Hum = 80 %

Step 1 : Service I Conditions at Bridge Opening

No Construction activity

NO Support Activity.

NO Slave/Master Activity.

NO Tendon Activity.

NO Displacement Initialization Activity.

Load Activity

4 Superstructure LL+IM 1

5 LS Pressure - Wings 1

7 LS Pressure - Abut 1

Step 2 : Service III Conditions at Bridge Opening

No Construction activity

NO Support Activity.

NO Slave/Master Activity.

NO Tendon Activity.

NO Displacement Initialization Activity.

Load Activity

5 LS Pressure - Wings 0.8

7 LS Pressure - Abut 0.8

4 Superstructure LL+IM 0.8

Stage 7 'Partial Live Load for Long Duration' Day = 55 Temp = 72°F Rel Hum = 80 %

Step 1 : step 1

No Construction activity

NO Support Activity.

NO Slave/Master Activity.

NO Tendon Activity.

NO Displacement Initialization Activity.

Load Activity

5 LS Pressure - Wings 0.1

7 LS Pressure - Abut 0.1

4 Superstructure LL+IM 0.1

Stage 8 'Remove Long Term Live Load' Day = 27374 Temp = 72°F Rel Hum = 80 %

Step 1 : step 1

No Construction activity

NO Support Activity.

NO Slave/Master Activity.

NO Tendon Activity.

NO Displacement Initialization Activity.

Load Activity

5 LS Pressure - Wings -0.1

7 LS Pressure - Abut -0.1

4 Superstructure LL+IM -0.1

Stage 9 'Long Term Performance' Day = 36500 Temp = 72°F Rel Hum = 80 %

Step 1 : Service III Conditions at Bridge End of Life

No Construction activity

NO Support Activity.

NO Slave/Master Activity.

NO Tendon Activity.

NO Displacement Initialization Activity.

Load Activity

5 LS Pressure - Wings 0.8

7 LS Pressure - Abut 0.8

4 Superstructure LL+IM 0.8

Step 2 : Service I Conditions at Bridge End of Life

No Construction activity

NO Support Activity.

NO Slave/Master Activity.

NO Tendon Activity.

NO Displacement Initialization Activity.

Load Activity

5 LS Pressure - Wings 1

7 LS Pressure - Abut 1

4 Superstructure LL+IM 1

Step 3 : Strength I Conditions at Bridge End of Life

No Construction activity

NO Support Activity.

NO Slave/Master Activity.

NO Tendon Activity.

NO Displacement Initialization Activity.

Load Activity

5	LS Pressure - Wings	1.75
7	LS Pressure - Abut	1
4	Superstructure LL+IM	1.75
1	Self Weight	0.25
2	Superstructure DC	0.25
3	Superstructure DW	0.5
6	EH Pressure - Wings	0.35

Result Cases Summary

Set Precast In Place: Set Precast In Place: Add Supports
Solved: 3/3/2014

Load Class: Accumulated Locked-in Force Effects Resulting from the Construction Process

Set Precast In Place: Set Precast In Place: Add Precast and
Solved: 3/3/2014

Load Class: None

Tension PT: Tension PT: Creep
Solved: 3/3/2014

Load Class: Creep

Tension PT: Tension PT: Shrinkage
Solved: 3/3/2014

Load Class: Shrinkage

Tension PT: Tension PT: PT Relaxation
Solved: 3/3/2014

Load Class: Prestress Loss(Relaxation)

Tension PT: Tension PT: Other PT Losses
Solved: 3/3/2014

Load Class: Prestress Loss(Shrinkage, Elastic Shortening, Creep)

Tension PT: Tension PT: Stress All Tendo
Solved: 3/3/2014

Load Class: Prestress Load

Add Superstructure: Add Superstructure: Creep
Solved: 3/3/2014

Load Class: Creep

Add Superstructure: Add Superstructure: Shrinkage
Solved: 3/3/2014

Load Class: Shrinkage

Add Superstructure: Add Superstructure: PT Relaxation
Solved: 3/3/2014

Load Class: Prestress Loss(Relaxation)

Add Superstructure: Add Superstructure: Other PT Losses
Solved: 3/3/2014

Load Class: Prestress Loss(Shrinkage, Elastic Shortening, Creep)

Add Superstructure: Add Superstructure: DC Loads Only

Solved: 3/3/2014

Load Class: Dead Load

Backfill to Grade: Backfill to Grade: Creep
Solved: 3/3/2014

Load Class: Creep

Backfill to Grade: Backfill to Grade: Shrinkage
Solved: 3/3/2014

Load Class: Shrinkage

Backfill to Grade: Backfill to Grade: PT Relaxation
Solved: 3/3/2014

Load Class: Prestress Loss(Relaxation)

Backfill to Grade: Backfill to Grade: Other PT Losses
Solved: 3/3/2014

Load Class: Prestress Loss(Shrinkage, Elastic Shortening, Creep)

Backfill to Grade: Backfill to Grade: Earth Pressure
Solved: 3/3/2014

Load Class: Earth Pressure

Backfill to Grade: Backfill to Grade: Live Load Surcha
Solved: 3/3/2014

Load Class: Live Load Surcharge

Pave: Pave: Creep
Solved: 3/3/2014

Load Class: Creep

Pave: Pave: Shrinkage
Solved: 3/3/2014

Load Class: Shrinkage

Pave: Pave: PT Relaxation
Solved: 3/3/2014

Load Class: Prestress Loss(Relaxation)

Pave: Pave: Other PT Losses
Solved: 3/3/2014

Load Class: Prestress Loss(Shrinkage, Elastic Shortening, Creep)

Pave: Pave: step 1
Solved: 3/3/2014

Load Class: Dead Load

Open Bridge to Traffic: Open Bridge to Traffic: Creep

Solved: 3/3/2014

Load Class: Creep

Open Bridge to Traffic: Open Bridge to Traffic: Shrinkage
Solved: 3/3/2014

Load Class: Shrinkage

Open Bridge to Traffic: Open Bridge to Traffic: PT Relaxation
Solved: 3/3/2014

Load Class: Prestress Loss(Relaxation)

Open Bridge to Traffic: Open Bridge to Traffic: Other PT Losses
Solved: 3/3/2014

Load Class: Prestress Loss(Shrinkage, Elastic Shortening, Creep)

Open Bridge to Traffic: Open Bridge to Traffic: Service I Condit
Solved: 3/3/2014

Load Class: Dead Load

Open Bridge to Traffic: Open Bridge to Traffic: Service III Cond
Solved: 3/3/2014

Load Class: Live Load Surcharge

Partial Live Load for Long Duration: Partial Live Load for Long Duration: Creep
Solved: 3/3/2014

Load Class: Creep

Partial Live Load for Long Duration: Partial Live Load for Long Duration: Shrinkage
Solved: 3/3/2014

Load Class: Shrinkage

Partial Live Load for Long Duration: Partial Live Load for Long Duration: PT Relaxation
Solved: 3/3/2014

Load Class: Prestress Loss(Relaxation)

Partial Live Load for Long Duration: Partial Live Load for Long Duration: Other PT Losses
Solved: 3/3/2014

Load Class: Prestress Loss(Shrinkage, Elastic Shortening, Creep)

Partial Live Load for Long Duration: Partial Live Load for Long Duration: step 1
Solved: 3/3/2014

Load Class: Live Load Surcharge

Remove Long Term Live Load: Remove Long Term Live Load: Creep
Solved: 3/3/2014

Load Class: Creep

Remove Long Term Live Load: Remove Long Term Live Load: Shrinkage

Solved: 3/3/2014

Load Class: Shrinkage

Remove Long Term Live Load: Remove Long Term Live Load: PT Relaxation
Solved: 3/3/2014

Load Class: Prestress Loss(Relaxation)

Remove Long Term Live Load: Remove Long Term Live Load: Other PT Losses
Solved: 3/3/2014

Load Class: Prestress Loss(Shrinkage, Elastic Shortening, Creep)

Remove Long Term Live Load: Remove Long Term Live Load: step 1
Solved: 3/3/2014

Load Class: Live Load Surcharge

Long Term Performance: Long Term Performance: Creep
Solved: 3/3/2014

Load Class: Creep

Long Term Performance: Long Term Performance: Shrinkage
Solved: 3/3/2014

Load Class: Shrinkage

Long Term Performance: Long Term Performance: PT Relaxation
Solved: 3/3/2014

Load Class: Prestress Loss(Relaxation)

Long Term Performance: Long Term Performance: Other PT Losses
Solved: 3/3/2014

Load Class: Prestress Loss(Shrinkage, Elastic Shortening, Creep)

Long Term Performance: Long Term Performance: Service III Cond
Solved: 3/3/2014

Load Class: Live Load Surcharge

Long Term Performance: Long Term Performance: Service I Condit
Solved: 3/3/2014

Load Class: Live Load Surcharge

Long Term Performance: Long Term Performance: Strength I Condi
Solved: 3/3/2014

Load Class: Live Load Surcharge

Strength Check: Strength Check: Creep
Solved: 3/3/2014

Load Class: Creep

Strength Check: Strength Check: Shrinkage

Solved: 3/3/2014

Load Class: Shrinkage

Strength Check: Strength Check: PT Relaxation
Solved: 3/3/2014

Load Class: Prestress Loss(Relaxation)

Strength Check: Strength Check: Other PT Losses
Solved: 3/3/2014

Load Class: Prestress Loss(Shrinkage, Elastic Shortening, Creep)

Strength Check: Strength Check: Detension to Rem
Solved: 3/3/2014

Load Class: Prestress Load

Strength Check: Strength Check: Strength I Condi
Solved: 3/3/2014

Load Class: Live Load Surcharge

RESULT : Member Sectional Forces

Member	Station	Result Case	Force X (kips)	Force Y (kips)	Force Z (kips)	Moment X (kips-ft)	Moment Y (kips-ft)	Moment Z (kips-ft)
1	0	Set Precast In Place: Set	0.0000	0.0000	0.0000	0.0000	0.0000	0.0000
1	0	Set Precast In Place: Set	0.0000	0.0000	0.0000	0.0000	0.0000	0.0000
1	0	Tension PT: Tension PT:	0.0000	0.0000	0.0000	0.0000	0.0000	0.0000
1	0	Tension PT: Tension PT:	0.0000	0.0000	0.0000	0.0000	0.0000	0.0000
1	0	Tension PT: Tension PT:	0.0000	0.0000	0.0000	0.0000	0.0000	0.0000
1	0	Tension PT: Tension PT:	0.0000	0.0000	0.0000	0.0000	0.0000	0.0000
1	0	Tension PT: Tension PT:	0.0000	0.0000	0.0000	0.0000	0.0000	0.0000
1	0	Add Superstructure: Add	0.0000	0.0000	0.0000	0.0000	0.0000	0.0000
1	0	Add Superstructure: Add	0.0000	0.0000	0.0000	0.0000	0.0000	0.0000
1	0	Add Superstructure: Add	0.0000	0.0000	0.0000	0.0000	0.0000	0.0000
1	0	Add Superstructure: Add	0.0000	0.0000	0.0000	0.0000	0.0000	0.0000
1	0	Add Superstructure: Add	0.0000	0.0000	0.0000	0.0000	0.0000	0.0000
1	0	Backfill to Grade: Backfill	0.0000	0.0000	0.0000	0.0000	0.0000	0.0000
1	0	Backfill to Grade: Backfill	0.0000	0.0000	0.0000	0.0000	0.0000	0.0000
1	0	Backfill to Grade: Backfill	0.0000	0.0000	0.0000	0.0000	0.0000	0.0000
1	0	Backfill to Grade: Backfill	0.0000	0.0000	0.0000	0.0000	0.0000	0.0000
1	0	Backfill to Grade: Backfill	0.0000	0.0000	0.0000	0.0000	0.0000	0.0000
1	0	Backfill to Grade: Backfill	0.0000	0.0000	0.0000	0.0000	0.0000	0.0000
1	0	Pave: Pave: Creep	0.0000	0.0000	0.0000	0.0000	0.0000	0.0000

RESULT : Member Sectional Forces

Member	Station		Result Case	Force X (kips)		Force Y (kips)		Force Z (kips)	Moment X (kips-ft)	Moment Y (kips-ft)	Moment Z (kips-ft)
1	0	Pave: Pave: Shrinkage	0.0000	0.0000	0.0000	0.0000	0.0000	0.0000			
1	0	Pave: Pave: PT	0.0000	0.0000	0.0000	0.0000	0.0000	0.0000			
1	0	Pave: Pave: Other PT	0.0000	0.0000	0.0000	0.0000	0.0000	0.0000			
1	0	Pave: Pave: step 1	0.0000	0.0000	0.0000	0.0000	0.0000	0.0000			
1	0	Open Bridge to Traffic:	0.0000	0.0000	0.0000	0.0000	0.0000	0.0000			
1	0	Open Bridge to Traffic:	0.0000	0.0000	0.0000	0.0000	0.0000	0.0000			
1	0	Open Bridge to Traffic:	0.0000	0.0000	0.0000	0.0000	0.0000	0.0000			
1	0	Open Bridge to Traffic:	0.0000	0.0000	0.0000	0.0000	0.0000	0.0000			
1	0	Open Bridge to Traffic:	0.0000	0.0000	0.0000	0.0000	0.0000	0.0000			
1	0	Open Bridge to Traffic:	0.0000	0.0000	0.0000	0.0000	0.0000	0.0000			
1	0	Partial Live Load for	0.0000	0.0000	0.0000	0.0000	0.0000	0.0000			
1	0	Partial Live Load for	0.0000	0.0000	0.0000	0.0000	0.0000	0.0000			
1	0	Partial Live Load for	0.0000	0.0000	0.0000	0.0000	0.0000	0.0000			
1	0	Partial Live Load for	0.0000	0.0000	0.0000	0.0000	0.0000	0.0000			
1	0	Partial Live Load for	0.0000	0.0000	0.0000	0.0000	0.0000	0.0000			
1	0	Remove Long Term Live	0.0000	0.0000	0.0000	0.0000	0.0000	0.0000			
1	0	Remove Long Term Live	0.0000	0.0000	0.0000	0.0000	0.0000	0.0000			
1	0	Remove Long Term Live	0.0000	0.0000	0.0000	0.0000	0.0000	0.0000			
1	0	Remove Long Term Live	0.0000	0.0000	0.0000	0.0000	0.0000	0.0000			
1	0	Remove Long Term Live	0.0000	0.0000	0.0000	0.0000	0.0000	0.0000			
1	0	Long Term Performance:	0.0000	0.0000	0.0000	0.0000	0.0000	0.0000			
1	0	Long Term Performance:	0.0000	0.0000	0.0000	0.0000	0.0000	0.0000			
1	0	Long Term Performance:	0.0000	0.0000	0.0000	0.0000	0.0000	0.0000			
1	0	Long Term Performance:	0.0000	0.0000	0.0000	0.0000	0.0000	0.0000			
1	0	Long Term Performance:	0.0000	0.0000	0.0000	0.0000	0.0000	0.0000			
1	0	Long Term Performance:	0.0000	0.0000	0.0000	0.0000	0.0000	0.0000			
1	0	Long Term Performance:	0.0000	0.0000	0.0000	0.0000	0.0000	0.0000			
1	0	Strength Check: Strength	0.0000	0.0000	0.0000	0.0000	0.0000	0.0000			
1	0	Strength Check: Strength	0.0000	0.0000	0.0000	0.0000	0.0000	0.0000			
1	0	Strength Check: Strength	0.0000	0.0000	0.0000	0.0000	0.0000	0.0000			
1	0	Strength Check: Strength	0.0000	0.0000	0.0000	0.0000	0.0000	0.0000			
1	0	Strength Check: Strength	0.0000	0.0000	0.0000	0.0000	0.0000	0.0000			
1	0	Strength Check: Strength	0.0000	0.0000	0.0000	0.0000	0.0000	0.0000			
1	1	Set Precast In Place: Set	0.0000	0.0000	0.0000	0.0000	0.0000	0.0000			

RESULT : Member Sectional Forces

Member	Station	Result Case	Force X (kips)	Force Y (kips)	Force Z (kips)	Moment X (kips-ft)	Moment Y (kips-ft)	Moment Z (kips-ft)
1	1	Set Precast In Place: Set	0.0000	0.0000	-11.9320	0.0000	-27.1170	0.0000
1	1	Tension PT: Tension PT:	0.0000	0.0000	-11.9320	0.0000	-27.1170	0.0000
1	1	Tension PT: Tension PT:	0.0000	0.0000	-11.9320	0.0000	-27.1170	0.0000
1	1	Tension PT: Tension PT:	0.0000	0.0000	-11.9320	0.0000	-27.1170	0.0000
1	1	Tension PT: Tension PT:	0.0000	0.0000	-11.9320	0.0000	-27.1170	0.0000
1	1	Tension PT: Tension PT:	0.0000	0.0000	-11.9320	0.0000	-27.1170	0.0000
1	1	Add Superstructure: Add	0.0000	0.0000	-11.9320	0.0000	-27.1170	0.0000
1	1	Add Superstructure: Add	0.0000	0.0000	-11.9320	0.0000	-27.1170	0.0000
1	1	Add Superstructure: Add	0.0000	0.0000	-11.9320	0.0000	-27.1170	0.0000
1	1	Add Superstructure: Add	0.0000	0.0000	-11.9320	0.0000	-27.1170	0.0000
1	1	Add Superstructure: Add	0.0000	0.0000	-11.9320	0.0000	-27.1170	0.0000
1	1	Backfill to Grade: Backfill	0.0000	0.0000	-11.9320	0.0000	-27.1170	0.0000
1	1	Backfill to Grade: Backfill	0.0000	0.0000	-11.9320	0.0000	-27.1170	0.0000
1	1	Backfill to Grade: Backfill	0.0000	0.0000	-11.9320	0.0000	-27.1170	0.0000
1	1	Backfill to Grade: Backfill	0.0000	0.0000	-11.9320	0.0000	-27.1170	0.0000
1	1	Backfill to Grade: Backfill	0.0000	-19.0902	-11.9320	37.1349	-27.1170	-43.3850
1	1	Backfill to Grade: Backfill	0.0000	-24.3263	-11.9320	37.1349	-27.1170	-55.2849
1	1	Pave: Pave: Creep	0.0000	-19.0902	-11.9320	37.1349	-27.1170	-43.3850
1	1	Pave: Pave: Shrinkage	0.0000	-19.0902	-11.9320	37.1349	-27.1170	-43.3850
1	1	Pave: Pave: PT	0.0000	-19.0902	-11.9320	37.1349	-27.1170	-43.3850
1	1	Pave: Pave: Other PT	0.0000	-19.0902	-11.9320	37.1349	-27.1170	-43.3850
1	1	Pave: Pave: step 1	0.0000	-19.0902	-11.9320	37.1349	-27.1170	-43.3850
1	1	Open Bridge to Traffic:	0.0000	-19.0902	-11.9320	37.1349	-27.1170	-43.3850
1	1	Open Bridge to Traffic:	0.0000	-19.0902	-11.9320	37.1349	-27.1170	-43.3850
1	1	Open Bridge to Traffic:	0.0000	-19.0902	-11.9320	37.1349	-27.1170	-43.3850
1	1	Open Bridge to Traffic:	0.0000	-19.0902	-11.9320	37.1349	-27.1170	-43.3850
1	1	Open Bridge to Traffic:	0.0000	-25.6354	-11.9320	37.1349	-27.1170	-58.2599
1	1	Open Bridge to Traffic:	0.0000	-24.3263	-11.9320	37.1349	-27.1170	-55.2849
1	1	Partial Live Load for	0.0000	-19.0902	-11.9320	37.1349	-27.1170	-43.3850
1	1	Partial Live Load for	0.0000	-19.0902	-11.9320	37.1349	-27.1170	-43.3850
1	1	Partial Live Load for	0.0000	-19.0902	-11.9320	37.1349	-27.1170	-43.3850
1	1	Partial Live Load for	0.0000	-19.0902	-11.9320	37.1349	-27.1170	-43.3850
1	1	Partial Live Load for	0.0000	-19.7447	-11.9320	37.1349	-27.1170	-44.8725
1	1	Remove Long Term Live	0.0000	-19.7447	-11.9320	37.1349	-27.1170	-44.8725

RESULT : Member Sectional Forces

Member	Station	Result Case	Force X (kips)	Force Y (kips)	Force Z (kips)	Moment X (kips-ft)	Moment Y (kips-ft)	Moment Z (kips-ft)
1	1	Remove Long Term Live	0.0000	-19.7447	-11.9320	37.1349	-27.1170	-44.8725
1	1	Remove Long Term Live	0.0000	-19.7447	-11.9320	37.1349	-27.1170	-44.8725
1	1	Remove Long Term Live	0.0000	-19.7447	-11.9320	37.1349	-27.1170	-44.8725
1	1	Remove Long Term Live	0.0000	-19.0902	-11.9320	37.1349	-27.1170	-43.3850
1	1	Long Term Performance:	0.0000	-19.0902	-11.9320	37.1349	-27.1170	-43.3850
1	1	Long Term Performance:	0.0000	-19.0902	-11.9320	37.1349	-27.1170	-43.3850
1	1	Long Term Performance:	0.0000	-19.0902	-11.9320	37.1349	-27.1170	-43.3850
1	1	Long Term Performance:	0.0000	-19.0902	-11.9320	37.1349	-27.1170	-43.3850
1	1	Long Term Performance:	0.0000	-24.3263	-11.9320	37.1349	-27.1170	-55.2849
1	1	Long Term Performance:	0.0000	-25.6354	-11.9320	37.1349	-27.1170	-58.2599
1	1	Long Term Performance:	0.0000	-37.2258	-14.9150	50.1321	-33.8963	-84.6008
1	1	Strength Check: Strength	0.0000	-19.0902	-11.9320	37.1349	-27.1170	-43.3850
1	1	Strength Check: Strength	0.0000	-19.0902	-11.9320	37.1349	-27.1170	-43.3850
1	1	Strength Check: Strength	0.0000	-19.0902	-11.9320	37.1349	-27.1170	-43.3850
1	1	Strength Check: Strength	0.0000	-19.0902	-11.9320	37.1349	-27.1170	-43.3850
1	1	Strength Check: Strength	0.0000	-19.0902	-11.9320	37.1349	-27.1170	-43.3850
1	1	Strength Check: Strength	0.0000	-37.2258	-14.9150	50.1321	-33.8963	-84.6008
1	2	Set Precast In Place: Set	0.0000	0.0000	0.0000	0.0000	0.0000	0.0000
1	2	Set Precast In Place: Set	0.0000	0.0000	-23.8639	0.0000	-108.4682	0.0000
1	2	Tension PT: Tension PT:	0.0000	0.0000	-23.8639	0.0000	-108.4682	0.0000
1	2	Tension PT: Tension PT:	0.0000	0.0000	-23.8639	0.0000	-108.4682	0.0000
1	2	Tension PT: Tension PT:	0.0000	0.0000	-23.8639	0.0000	-108.4682	0.0000
1	2	Tension PT: Tension PT:	0.0000	0.0000	-23.8639	0.0000	-108.4682	0.0000
1	2	Tension PT: Tension PT:	103.9598	285.5907	-23.8639	-499.7790	73.4597	190.8115
1	2	Add Superstructure: Add	103.9598	285.5907	-23.8639	-499.7790	73.4597	190.8115
1	2	Add Superstructure: Add	103.9598	285.5907	-23.8639	-499.7790	73.4597	190.8115
1	2	Add Superstructure: Add	103.9598	285.5907	-23.8639	-499.7790	73.4597	190.8115
1	2	Add Superstructure: Add	103.9274	285.5018	-23.8639	-499.6234	73.4030	190.7523
1	2	Add Superstructure: Add	103.9274	285.5018	-23.8639	-499.6234	73.4030	190.7523
1	2	Backfill to Grade: Backfill	103.9274	285.5018	-23.8639	-499.6234	73.4030	190.7523
1	2	Backfill to Grade: Backfill	103.9274	285.5018	-23.8639	-499.6234	73.4030	190.7523
1	2	Backfill to Grade: Backfill	103.9274	285.5018	-23.8639	-499.6234	73.4030	190.7523
1	2	Backfill to Grade: Backfill	103.8795	285.3702	-23.8639	-499.3931	73.3192	190.6649
1	2	Backfill to Grade: Backfill	103.8795	254.8260	-23.8639	-439.9773	73.3192	24.0663

RESULT : Member Sectional Forces

Member	Station		Result Case	Force X (kips)	Force Y (kips)	Force Z (kips)	Moment X (kips-ft)	Moment Y (kips-ft)	Moment Z (kips-ft)
1	2	Backfill to Grade: Backfill	103.8795	246.4481	-23.8639	-439.9773	73.3192	-21.6293	
1	2	Pave: Pave: Creep	103.8795	254.8260	-23.8639	-439.9773	73.3192	24.0663	
1	2	Pave: Pave: Shrinkage	103.8795	254.8260	-23.8639	-439.9773	73.3192	24.0663	
1	2	Pave: Pave: PT	103.8795	254.8260	-23.8639	-439.9773	73.3192	24.0663	
1	2	Pave: Pave: Other PT	103.8896	254.8537	-23.8639	-440.0258	73.3369	24.0847	
1	2	Pave: Pave: step 1	103.8896	254.8537	-23.8639	-440.0258	73.3369	24.0847	
1	2	Open Bridge to Traffic:	103.8896	254.8537	-23.8639	-440.0258	73.3369	24.0847	
1	2	Open Bridge to Traffic:	103.8896	254.8537	-23.8639	-440.0258	73.3369	24.0847	
1	2	Open Bridge to Traffic:	103.8896	254.8537	-23.8639	-440.0258	73.3369	24.0847	
1	2	Open Bridge to Traffic:	103.8842	254.8389	-23.8639	-439.9999	73.3274	24.0749	
1	2	Open Bridge to Traffic:	103.8842	244.3666	-23.8639	-439.9999	73.3274	-33.0446	
1	2	Open Bridge to Traffic:	103.8842	246.4610	-23.8639	-439.9999	73.3274	-21.6207	
1	2	Partial Live Load for	103.8842	254.8389	-23.8639	-439.9999	73.3274	24.0749	
1	2	Partial Live Load for	103.8842	254.8389	-23.8639	-439.9999	73.3274	24.0749	
1	2	Partial Live Load for	103.8842	254.8389	-23.8639	-439.9999	73.3274	24.0749	
1	2	Partial Live Load for	103.8788	254.8241	-23.8639	-439.9740	73.3180	24.0651	
1	2	Partial Live Load for	103.8788	253.7769	-23.8639	-439.9740	73.3180	18.3531	
1	2	Remove Long Term Live	103.8788	253.7769	-23.8639	-439.9740	73.3180	18.3531	
1	2	Remove Long Term Live	103.8788	253.7769	-23.8639	-439.9740	73.3180	18.3531	
1	2	Remove Long Term Live	103.8788	253.7769	-23.8639	-439.9740	73.3180	18.3531	
1	2	Remove Long Term Live	99.4164	241.5181	-23.8639	-418.5212	65.5088	10.1997	
1	2	Remove Long Term Live	99.4164	242.5654	-23.8639	-418.5212	65.5088	15.9117	
1	2	Long Term Performance:	99.4164	242.5654	-23.8639	-418.5212	65.5088	15.9117	
1	2	Long Term Performance:	99.4164	242.5654	-23.8639	-418.5212	65.5088	15.9117	
1	2	Long Term Performance:	99.4164	242.5654	-23.8639	-418.5212	65.5088	15.9117	
1	2	Long Term Performance:	99.2375	242.0738	-23.8639	-417.6611	65.1957	15.5848	
1	2	Long Term Performance:	99.2375	233.6960	-23.8639	-417.6611	65.1957	-30.1108	
1	2	Long Term Performance:	99.2375	231.6015	-23.8639	-417.6611	65.1957	-41.5347	
1	2	Long Term Performance:	99.2375	213.0568	-29.8299	-396.8655	38.0787	-142.6839	
1	2	Strength Check: Strength	99.2375	242.0738	-23.8639	-417.6611	65.1957	15.5848	
1	2	Strength Check: Strength	99.2375	242.0738	-23.8639	-417.6611	65.1957	15.5848	
1	2	Strength Check: Strength	99.2375	242.0738	-23.8639	-417.6611	65.1957	15.5848	
1	2	Strength Check: Strength	99.2375	242.0738	-23.8639	-417.6609	65.1957	15.5847	
1	2	Strength Check: Strength	0.0000	-30.5443	-23.8639	59.4159	-108.4682	-166.5985	

RESULT : Member Sectional Forces

Member	Station	Result Case	Force X (kips)	Force Y (kips)	Force Z (kips)	Moment X (kips-ft)	Moment Y (kips-ft)	Moment Z (kips-ft)
1	2	Strength Check: Strength	99.2375	213.0567	-29.8299	-396.8654	38.0787	-142.6839
2	0	Set Precast In Place: Set	0.0000	0.0000	0.0000	0.0000	0.0000	0.0000
2	0	Set Precast In Place: Set	0.1689	0.0000	-23.8633	101.9227	37.1024	-0.7212
2	0	Tension PT: Tension PT:	0.1689	0.0000	-23.8633	101.9227	37.1024	-0.7212
2	0	Tension PT: Tension PT:	0.1689	0.0000	-23.8633	101.9227	37.1024	-0.7212
2	0	Tension PT: Tension PT:	0.1689	0.0000	-23.8633	101.9227	37.1024	-0.7212
2	0	Tension PT: Tension PT:	0.1689	0.0000	-23.8633	101.9227	37.1024	-0.7212
2	0	Tension PT: Tension PT:	-303.7474	0.0001	-26.0138	103.2728	47.2383	190.0856
2	0	Add Superstructure: Add	-303.7474	0.0001	-26.0138	103.2728	47.2383	190.0856
2	0	Add Superstructure: Add	-303.7474	0.0001	-26.0138	103.2728	47.2383	190.0856
2	0	Add Superstructure: Add	-303.7474	0.0001	-26.0138	103.2728	47.2383	190.0856
2	0	Add Superstructure: Add	-303.6527	0.0001	-26.0131	103.2724	47.2352	190.0264
2	0	Add Superstructure: Add	-303.6527	0.0001	-26.0131	103.2724	47.2352	190.0264
2	0	Backfill to Grade: Backfill	-303.6527	0.0001	-26.0131	103.2724	47.2352	190.0264
2	0	Backfill to Grade: Backfill	-303.6527	0.0001	-26.0131	103.2724	47.2352	190.0264
2	0	Backfill to Grade: Backfill	-303.6527	0.0001	-26.0131	103.2724	47.2352	190.0264
2	0	Backfill to Grade: Backfill	-303.5128	0.0001	-26.0121	103.2717	47.2305	189.9389
2	0	Backfill to Grade: Backfill	-274.8117	10.4480	-25.8090	100.4014	51.8775	23.3565
2	0	Backfill to Grade: Backfill	-266.9394	13.3137	-25.7533	105.1885	37.8382	-22.3741
2	0	Pave: Pave: Creep	-274.8117	10.4480	-25.8090	100.4014	51.8775	23.3565
2	0	Pave: Pave: Shrinkage	-274.8117	10.4480	-25.8090	100.4014	51.8775	23.3565
2	0	Pave: Pave: PT	-274.8117	10.4480	-25.8090	100.4014	51.8775	23.3565
2	0	Pave: Pave: Other PT	-274.8412	10.4480	-25.8092	100.4016	51.8784	23.3749
2	0	Pave: Pave: step 1	-274.8412	10.4480	-25.8092	100.4016	51.8784	23.3749
2	0	Open Bridge to Traffic:	-274.8412	10.4480	-25.8092	100.4016	51.8784	23.3749
2	0	Open Bridge to Traffic:	-274.8412	10.4480	-25.8092	100.4016	51.8784	23.3749
2	0	Open Bridge to Traffic:	-274.8412	10.4480	-25.8092	100.4016	51.8784	23.3749
2	0	Open Bridge to Traffic:	-274.8254	10.4480	-25.8091	100.4015	51.8779	23.3651
2	0	Open Bridge to Traffic:	-264.9850	14.0301	-25.7395	106.3853	34.3288	-33.7982
2	0	Open Bridge to Traffic:	-266.9531	13.3137	-25.7534	105.1886	37.8386	-22.3655
2	0	Partial Live Load for	-274.8254	10.4480	-25.8091	100.4015	51.8779	23.3651
2	0	Partial Live Load for	-274.8254	10.4480	-25.8091	100.4015	51.8779	23.3651
2	0	Partial Live Load for	-274.8254	10.4480	-25.8091	100.4015	51.8779	23.3651
2	0	Partial Live Load for	-274.8097	10.4480	-25.8090	100.4014	51.8774	23.3552

RESULT : Member Sectional Forces

Member	Station	Result Case	Force X (kips)	Force Y (kips)	Force Z (kips)	Moment X (kips-ft)	Moment Y (kips-ft)	Moment Z (kips-ft)
2	0	Partial Live Load for	-273.8257	10.8062	-25.8020	100.9998	50.1225	17.6389
2	0	Remove Long Term Live	-273.8257	10.8062	-25.8020	100.9998	50.1225	17.6389
2	0	Remove Long Term Live	-273.8257	10.8062	-25.8020	100.9998	50.1225	17.6389
2	0	Remove Long Term Live	-273.8257	10.8062	-25.8020	100.9998	50.1225	17.6389
2	0	Remove Long Term Live	-260.7803	10.8062	-25.7097	100.9421	49.6876	9.4857
2	0	Remove Long Term Live	-261.7643	10.4480	-25.7167	100.3437	51.4425	15.2021
2	0	Long Term Performance:	-261.7643	10.4480	-25.7167	100.3437	51.4425	15.2021
2	0	Long Term Performance:	-261.7643	10.4480	-25.7167	100.3437	51.4425	15.2021
2	0	Long Term Performance:	-261.7643	10.4480	-25.7167	100.3437	51.4425	15.2021
2	0	Long Term Performance:	-261.2412	10.4480	-25.7130	100.3414	51.4251	14.8752
2	0	Long Term Performance:	-253.3690	13.3137	-25.6573	105.1285	37.3858	-30.8554
2	0	Long Term Performance:	-251.4009	14.0301	-25.6434	106.3253	33.8760	-42.2881
2	0	Long Term Performance:	-233.9330	20.3735	-31.4859	135.2892	31.6162	-143.6447
2	0	Strength Check: Strength	-261.2412	10.4480	-25.7130	100.3414	51.4251	14.8752
2	0	Strength Check: Strength	-261.2412	10.4480	-25.7130	100.3414	51.4251	14.8752
2	0	Strength Check: Strength	-261.2412	10.4480	-25.7130	100.3414	51.4251	14.8752
2	0	Strength Check: Strength	-261.2412	10.4480	-25.7130	100.3414	51.4251	14.8751
2	0	Strength Check: Strength	28.8699	10.4479	-23.6602	99.0524	41.7494	-167.3036
2	0	Strength Check: Strength	-233.9330	20.3735	-31.4859	135.2892	31.6162	-143.6447
2	1	Set Precast In Place: Set	0.0000	0.0000	0.0000	0.0000	0.0000	0.0000
2	1	Set Precast In Place: Set	0.2164	0.0000	-30.5849	101.9227	-5.8079	-0.7212
2	1	Tension PT: Tension PT:	0.2164	0.0000	-30.5849	101.9227	-5.8079	-0.7212
2	1	Tension PT: Tension PT:	0.2164	0.0000	-30.5849	101.9227	-5.8079	-0.7212
2	1	Tension PT: Tension PT:	0.2164	0.0000	-30.5849	101.9227	-5.8079	-0.7212
2	1	Tension PT: Tension PT:	0.2164	0.0000	-30.5849	101.9227	-5.8079	-0.7212
2	1	Tension PT: Tension PT:	-303.9915	0.0001	-32.7374	103.2702	0.9448	189.7211
2	1	Add Superstructure: Add	-303.9915	0.0001	-32.7374	103.2702	0.9448	189.7211
2	1	Add Superstructure: Add	-303.9915	0.0001	-32.7374	103.2702	0.9448	189.7211
2	1	Add Superstructure: Add	-303.9915	0.0001	-32.7374	103.2702	0.9448	189.7211
2	1	Add Superstructure: Add	-303.8771	0.0001	-32.7366	103.2700	0.9423	189.6865
2	1	Add Superstructure: Add	-303.7904	0.0001	-44.9927	103.2700	-8.7167	189.6865
2	1	Backfill to Grade: Backfill	-303.7904	0.0001	-44.9927	103.2700	-8.7167	189.6865
2	1	Backfill to Grade: Backfill	-303.7904	0.0001	-44.9927	103.2700	-8.7167	189.6865
2	1	Backfill to Grade: Backfill	-303.7904	0.0001	-44.9927	103.2700	-8.7167	189.6865

RESULT : Member Sectional Forces

Member	Station	Result Case	Force X (kips)	Force Y (kips)	Force Z (kips)	Moment X (kips-ft)	Moment Y (kips-ft)	Moment Z (kips-ft)
2	1	Backfill to Grade: Backfill	-303.6391	0.0001	-44.9916	103.2694	-8.7201	189.6132
2	1	Backfill to Grade: Backfill	-274.9380	-14.4243	-44.7886	122.2136	-3.7530	29.6978
2	1	Backfill to Grade: Backfill	-267.0658	-19.2756	-44.7328	127.0007	-17.7045	-14.5567
2	1	Pave: Pave: Creep	-274.9380	-14.4243	-44.7886	122.2136	-3.7530	29.6978
2	1	Pave: Pave: Shrinkage	-274.9380	-14.4243	-44.7886	122.2136	-3.7530	29.6978
2	1	Pave: Pave: PT	-274.9380	-14.4243	-44.7886	122.2136	-3.7530	29.6978
2	1	Pave: Pave: Other PT	-274.9794	-14.4243	-44.7888	122.2136	-3.7521	29.7014
2	1	Pave: Pave: step 1	-274.9665	-14.4243	-46.6046	122.2136	-5.1831	29.7014
2	1	Open Bridge to Traffic:	-274.9665	-14.4243	-46.6046	122.2136	-5.1831	29.7014
2	1	Open Bridge to Traffic:	-274.9665	-14.4243	-46.6046	122.2136	-5.1831	29.7014
2	1	Open Bridge to Traffic:	-274.9665	-14.4243	-46.6046	122.2136	-5.1831	29.7014
2	1	Open Bridge to Traffic:	-274.9507	-14.4243	-46.6045	122.2135	-5.1834	29.6918
2	1	Open Bridge to Traffic:	-265.0506	-20.4884	-54.9704	128.1974	-29.2708	-25.6265
2	1	Open Bridge to Traffic:	-267.0306	-19.2756	-53.2972	127.0006	-24.4533	-14.5628
2	1	Partial Live Load for	-274.9507	-14.4243	-46.6045	122.2135	-5.1834	29.6918
2	1	Partial Live Load for	-274.9507	-14.4243	-46.6045	122.2135	-5.1834	29.6918
2	1	Partial Live Load for	-274.9507	-14.4243	-46.6045	122.2135	-5.1834	29.6918
2	1	Partial Live Load for	-274.9347	-14.4243	-46.6043	122.2135	-5.1838	29.6822
2	1	Partial Live Load for	-273.9448	-15.0307	-47.4409	122.8119	-7.5925	24.1503
2	1	Remove Long Term Live	-273.9448	-15.0307	-47.4409	122.8119	-7.5925	24.1503
2	1	Remove Long Term Live	-273.9448	-15.0307	-47.4409	122.8119	-7.5925	24.1503
2	1	Remove Long Term Live	-273.9448	-15.0307	-47.4409	122.8119	-7.5925	24.1503
2	1	Remove Long Term Live	-260.9764	-15.0307	-47.3492	122.7535	-7.8802	15.9009
2	1	Remove Long Term Live	-261.9664	-14.4243	-46.5126	122.1551	-5.4715	21.4327
2	1	Long Term Performance:	-261.9664	-14.4243	-46.5126	122.1551	-5.4715	21.4327
2	1	Long Term Performance:	-261.9664	-14.4243	-46.5126	122.1551	-5.4715	21.4327
2	1	Long Term Performance:	-261.9664	-14.4243	-46.5126	122.1551	-5.4715	21.4327
2	1	Long Term Performance:	-261.3969	-14.4243	-46.5086	122.1532	-5.4841	21.1638
2	1	Long Term Performance:	-253.4769	-19.2756	-53.2013	126.9403	-24.7540	-23.0908
2	1	Long Term Performance:	-251.4969	-20.4884	-54.8745	128.1370	-29.5715	-34.1544
2	1	Long Term Performance:	-233.9443	-14.1450	-72.6960	157.1010	-50.4807	-125.5127
2	1	Strength Check: Strength	-261.3969	-14.4243	-46.5086	122.1532	-5.4841	21.1638
2	1	Strength Check: Strength	-261.3969	-14.4243	-46.5086	122.1532	-5.4841	21.1638
2	1	Strength Check: Strength	-261.3969	-14.4243	-46.5086	122.1532	-5.4841	21.1638

RESULT : Member Sectional Forces

Member	Station	Result Case	Force X (kips)	Force Y (kips)	Force Z (kips)	Moment X (kips-ft)	Moment Y (kips-ft)	Moment Z (kips-ft)
2	1	Strength Check: Strength	-261.3969	-14.4243	-46.5086	122.1532	-5.4841	21.1638
2	1	Strength Check: Strength	29.0170	-14.4244	-44.4537	120.8668	-11.9308	-160.6365
2	1	Strength Check: Strength	-233.9442	-14.1450	-72.6960	157.1010	-50.4807	-125.5127
2	2	Set Precast In Place: Set	0.0000	0.0000	0.0000	0.0000	0.0000	0.0000
2	2	Set Precast In Place: Set	0.2640	0.0000	-37.3064	101.9227	-59.3127	-0.7212
2	2	Tension PT: Tension PT:	0.2640	0.0000	-37.3064	101.9227	-59.3127	-0.7212
2	2	Tension PT: Tension PT:	0.2640	0.0000	-37.3064	101.9227	-59.3127	-0.7212
2	2	Tension PT: Tension PT:	0.2640	0.0000	-37.3064	101.9227	-59.3127	-0.7212
2	2	Tension PT: Tension PT:	0.2640	0.0000	-37.3064	101.9227	-59.3127	-0.7212
2	2	Tension PT: Tension PT:	-305.1319	0.0001	-39.4673	103.2755	-55.9398	190.4741
2	2	Add Superstructure: Add	-305.1319	0.0001	-39.4673	103.2755	-55.9398	190.4741
2	2	Add Superstructure: Add	-305.1319	0.0001	-39.4673	103.2755	-55.9398	190.4741
2	2	Add Superstructure: Add	-305.1319	0.0001	-39.4673	103.2755	-55.9398	190.4741
2	2	Add Superstructure: Add	-304.9592	0.0001	-39.4661	103.2748	-55.9417	190.3661
2	2	Add Superstructure: Add	-304.7858	0.0001	-63.9784	103.2748	-94.5777	190.3661
2	2	Backfill to Grade: Backfill	-304.7858	0.0001	-63.9784	103.2748	-94.5777	190.3661
2	2	Backfill to Grade: Backfill	-304.7858	0.0001	-63.9784	103.2748	-94.5777	190.3661
2	2	Backfill to Grade: Backfill	-304.7858	0.0001	-63.9784	103.2748	-94.5777	190.3661
2	2	Backfill to Grade: Backfill	-304.6010	0.0001	-63.9771	103.2739	-94.5797	190.2507
2	2	Backfill to Grade: Backfill	-275.8999	-64.1688	-63.7740	165.8470	-89.2926	-31.6036
2	2	Backfill to Grade: Backfill	-268.0276	-84.4542	-63.7183	170.6341	-103.1563	-95.6683
2	2	Pave: Pave: Creep	-275.8999	-64.1688	-63.7740	165.8470	-89.2926	-31.6036
2	2	Pave: Pave: Shrinkage	-275.8999	-64.1688	-63.7740	165.8470	-89.2926	-31.6036
2	2	Pave: Pave: PT	-275.8999	-64.1688	-63.7740	165.8470	-89.2926	-31.6036
2	2	Pave: Pave: Other PT	-275.9766	-64.1688	-63.7745	165.8474	-89.2917	-31.5557
2	2	Pave: Pave: step 1	-275.9509	-64.1688	-67.4060	165.8474	-95.0156	-31.5557
2	2	Open Bridge to Traffic:	-275.9509	-64.1688	-67.4060	165.8474	-95.0156	-31.5557
2	2	Open Bridge to Traffic:	-275.9509	-64.1688	-67.4060	165.8474	-95.0156	-31.5557
2	2	Open Bridge to Traffic:	-275.9509	-64.1688	-67.4060	165.8474	-95.0156	-31.5557
2	2	Open Bridge to Traffic:	-275.9346	-64.1688	-67.4059	165.8473	-95.0158	-31.5659
2	2	Open Bridge to Traffic:	-265.9748	-89.5255	-84.2073	171.8311	-138.9374	-111.6467
2	2	Open Bridge to Traffic:	-267.9668	-84.4542	-80.8470	170.6344	-130.1531	-95.6306
2	2	Partial Live Load for	-275.9346	-64.1688	-67.4059	165.8473	-95.0158	-31.5659
2	2	Partial Live Load for	-275.9346	-64.1688	-67.4059	165.8473	-95.0158	-31.5659

RESULT : Member Sectional Forces

Member	Station	Result Case	Force X (kips)	Force Y (kips)	Force Z (kips)	Moment X (kips-ft)	Moment Y (kips-ft)	Moment Z (kips-ft)
2	2	Partial Live Load for	-275.9346	-64.1688	-67.4059	165.8473	-95.0158	-31.5659
2	2	Partial Live Load for	-275.9182	-64.1688	-67.4058	165.8472	-95.0160	-31.5762
2	2	Partial Live Load for	-274.9222	-66.7045	-69.0859	166.4456	-99.4081	-39.5842
2	2	Remove Long Term Live	-274.9222	-66.7045	-69.0859	166.4456	-99.4081	-39.5842
2	2	Remove Long Term Live	-274.9222	-66.7045	-69.0859	166.4456	-99.4081	-39.5842
2	2	Remove Long Term Live	-274.9222	-66.7045	-69.0859	166.4456	-99.4081	-39.5842
2	2	Remove Long Term Live	-262.1931	-66.7045	-68.9958	166.3893	-99.5485	-47.5398
2	2	Remove Long Term Live	-263.1891	-64.1688	-67.3157	165.7909	-95.1563	-39.5317
2	2	Long Term Performance:	-263.1891	-64.1688	-67.3157	165.7909	-95.1563	-39.5317
2	2	Long Term Performance:	-263.1891	-64.1688	-67.3157	165.7909	-95.1563	-39.5317
2	2	Long Term Performance:	-263.1891	-64.1688	-67.3157	165.7909	-95.1563	-39.5317
2	2	Long Term Performance:	-262.4799	-64.1688	-67.3107	165.7878	-95.1642	-39.9749
2	2	Long Term Performance:	-254.5122	-84.4542	-80.7519	170.5749	-130.3015	-104.0395
2	2	Long Term Performance:	-252.5202	-89.5255	-84.1122	171.7716	-139.0858	-120.0557
2	2	Long Term Performance:	-234.8828	-83.1821	-113.9126	200.7356	-197.5257	-201.4155
2	2	Strength Check: Strength	-262.4799	-64.1688	-67.3107	165.7878	-95.1642	-39.9749
2	2	Strength Check: Strength	-262.4799	-64.1688	-67.3107	165.7878	-95.1642	-39.9749
2	2	Strength Check: Strength	-262.4799	-64.1688	-67.3107	165.7878	-95.1642	-39.9749
2	2	Strength Check: Strength	-262.4799	-64.1688	-67.3107	165.7878	-95.1642	-39.9749
2	2	Strength Check: Strength	29.1642	-64.1689	-65.2471	164.4957	-98.3854	-222.5755
2	2	Strength Check: Strength	-234.8828	-83.1821	-113.9126	200.7356	-197.5257	-201.4156
3	0	Set Precast In Place: Set	0.0000	0.0000	0.0000	0.0000	0.0000	0.0000
3	0	Set Precast In Place: Set	-0.1541	0.0000	21.7760	0.0000	-59.3127	0.0000
3	0	Tension PT: Tension PT:	-0.1575	0.0000	22.2589	0.0000	-59.3127	0.0000
3	0	Tension PT: Tension PT:	-0.1575	0.0000	22.2594	0.0000	-59.3127	0.0000
3	0	Tension PT: Tension PT:	-0.1575	0.0000	22.2594	0.0000	-59.3127	0.0000
3	0	Tension PT: Tension PT:	-0.1575	0.0000	22.2594	0.0000	-59.3127	0.0000
3	0	Tension PT: Tension PT:	-305.5659	-27.7333	21.8621	0.6693	-55.9398	191.2001
3	0	Add Superstructure: Add	-305.5661	-27.7194	21.8900	0.7884	-55.9398	191.1993
3	0	Add Superstructure: Add	-305.5661	-27.7194	21.8902	0.7884	-55.9398	191.1993
3	0	Add Superstructure: Add	-305.5661	-27.7194	21.8902	0.7884	-55.9398	191.1993
3	0	Add Superstructure: Add	-305.3933	-27.7038	21.8904	0.7881	-55.9417	191.0913
3	0	Add Superstructure: Add	-305.6169	-27.7038	53.4763	0.7881	-94.5777	191.0913
3	0	Backfill to Grade: Backfill	-305.6250	-27.6952	54.6315	0.8821	-94.5777	191.0906

RESULT : Member Sectional Forces

Member	Station		Result Case	Force X (kips)	Force Y (kips)	Force Z (kips)	Moment X (kips-ft)	Moment Y (kips-ft)	Moment Z (kips-ft)
3	0	Backfill to Grade: Backfill	-305.6250	-27.6952	54.6322	0.8821	-94.5777	191.0906	
3	0	Backfill to Grade: Backfill	-305.6250	-27.6952	54.6322	0.8821	-94.5777	191.0906	
3	0	Backfill to Grade: Backfill	-305.4402	-27.6784	54.6325	0.8817	-94.5797	190.9752	
3	0	Backfill to Grade: Backfill	-276.7335	115.3260	54.0299	-113.9887	-89.2926	-29.6236	
3	0	Backfill to Grade: Backfill	-268.8719	159.0426	55.6049	-113.9453	-103.1563	-93.6547	
3	0	Pave: Pave: Creep	-276.7337	118.8341	54.0672	-114.1133	-89.2926	-29.6227	
3	0	Pave: Pave: Shrinkage	-276.7337	118.8341	54.0673	-114.1133	-89.2926	-29.6227	
3	0	Pave: Pave: PT	-276.7337	118.8341	54.0673	-114.1133	-89.2926	-29.6227	
3	0	Pave: Pave: Other PT	-276.8104	118.8272	54.0672	-114.1131	-89.2917	-29.5748	
3	0	Pave: Pave: step 1	-276.8435	118.8272	58.7466	-114.1131	-95.0156	-29.5748	
3	0	Open Bridge to Traffic:	-276.8443	119.4446	58.8685	-114.1359	-95.0156	-29.5746	
3	0	Open Bridge to Traffic:	-276.8443	119.4446	58.8686	-114.1359	-95.0156	-29.5746	
3	0	Open Bridge to Traffic:	-276.8443	119.4446	58.8686	-114.1359	-95.0156	-29.5746	
3	0	Open Bridge to Traffic:	-276.8281	119.4461	58.8686	-114.1360	-95.0158	-29.5848	
3	0	Open Bridge to Traffic:	-267.1550	174.0919	82.5770	-114.0817	-138.9374	-109.6237	
3	0	Open Bridge to Traffic:	-269.0896	163.1628	77.8353	-114.0925	-130.1531	-93.6159	
3	0	Partial Live Load for	-276.8284	119.8566	58.9154	-114.1498	-95.0158	-29.5847	
3	0	Partial Live Load for	-276.8284	119.8566	58.9155	-114.1498	-95.0158	-29.5847	
3	0	Partial Live Load for	-276.8284	119.8566	58.9155	-114.1498	-95.0158	-29.5847	
3	0	Partial Live Load for	-276.8120	119.8581	58.9155	-114.1499	-95.0160	-29.5950	
3	0	Partial Live Load for	-275.8447	125.3227	61.2864	-114.1444	-99.4081	-37.5989	
3	0	Remove Long Term Live	-275.8814	146.7133	66.4809	-114.3639	-99.4081	-37.5973	
3	0	Remove Long Term Live	-275.8814	146.7133	66.4850	-114.3639	-99.4081	-37.5973	
3	0	Remove Long Term Live	-275.8814	146.7133	66.4850	-114.3639	-99.4081	-37.5973	
3	0	Remove Long Term Live	-263.1518	147.8716	66.5012	-114.3916	-99.5485	-45.5530	
3	0	Remove Long Term Live	-264.1191	142.4071	64.1304	-114.3970	-95.1563	-37.5491	
3	0	Long Term Performance:	-264.1184	142.0419	64.0221	-114.3976	-95.1563	-37.5491	
3	0	Long Term Performance:	-264.1184	142.0419	64.0227	-114.3976	-95.1563	-37.5491	
3	0	Long Term Performance:	-264.1184	142.0419	64.0227	-114.3976	-95.1563	-37.5491	
3	0	Long Term Performance:	-263.4092	142.1066	64.0236	-114.3991	-95.1642	-37.9923	
3	0	Long Term Performance:	-255.6708	185.8232	82.9904	-114.3557	-130.3015	-102.0234	
3	0	Long Term Performance:	-253.7361	196.7524	87.7320	-114.3449	-139.0858	-118.0312	
3	0	Long Term Performance:	-236.5449	208.5831	120.9826	-114.6268	-197.5257	-199.1841	
3	0	Strength Check: Strength	-263.4092	142.1066	64.0236	-114.3992	-95.1642	-37.9923	

RESULT : Member Sectional Forces

Member	Station	Result Case	Force X (kips)	Force Y (kips)	Force Z (kips)	Moment X (kips-ft)	Moment Y (kips-ft)	Moment Z (kips-ft)
3	0	Strength Check: Strength	-263.4092	142.1066	64.0236	-114.3992	-95.1642	-37.9923
3	0	Strength Check: Strength	-263.4092	142.1066	64.0236	-114.3992	-95.1642	-37.9923
3	0	Strength Check: Strength	-263.4092	142.1066	64.0236	-114.3992	-95.1642	-37.9924
3	0	Strength Check: Strength	28.2468	168.5885	64.4034	-115.0386	-98.3854	-220.5975
3	0	Strength Check: Strength	-236.5448	208.5831	120.9826	-114.6269	-197.5257	-199.1841
3	1	Set Precast In Place: Set	0.0000	0.0000	0.0000	0.0000	0.0000	0.0000
3	1	Set Precast In Place: Set	-0.0275	0.0000	3.8876	0.0000	-6.0189	0.0000
3	1	Tension PT: Tension PT:	-0.0309	0.0000	4.3705	0.0000	-4.0134	0.0000
3	1	Tension PT: Tension PT:	-0.0309	0.0000	4.3710	0.0000	-4.0114	0.0000
3	1	Tension PT: Tension PT:	-0.0309	0.0000	4.3710	0.0000	-4.0114	0.0000
3	1	Tension PT: Tension PT:	-0.0309	0.0000	4.3710	0.0000	-4.0114	0.0000
3	1	Tension PT: Tension PT:	-306.8117	-27.7333	3.9640	0.6706	-2.3226	76.1942
3	1	Add Superstructure: Add	-306.8119	-27.7194	3.9919	0.7897	-2.2067	76.2509
3	1	Add Superstructure: Add	-306.8119	-27.7194	3.9921	0.7897	-2.2061	76.2509
3	1	Add Superstructure: Add	-306.8119	-27.7194	3.9921	0.7897	-2.2061	76.2509
3	1	Add Superstructure: Add	-306.6400	-27.7038	3.9923	0.7893	-2.2071	76.2083
3	1	Add Superstructure: Add	-306.6350	-27.7038	3.2833	0.7893	23.2765	76.2083
3	1	Backfill to Grade: Backfill	-306.6431	-27.6952	4.4385	0.8834	28.0745	76.2435
3	1	Backfill to Grade: Backfill	-306.6432	-27.6952	4.4392	0.8834	28.0776	76.2435
3	1	Backfill to Grade: Backfill	-306.6432	-27.6952	4.4392	0.8834	28.0776	76.2435
3	1	Backfill to Grade: Backfill	-306.4589	-27.6784	4.4394	0.8830	28.0765	76.1979
3	1	Backfill to Grade: Backfill	-277.7521	-15.7507	3.8369	0.9746	30.8610	177.3353
3	1	Backfill to Grade: Backfill	-269.8906	-12.7028	5.4119	1.0180	23.5389	210.4168
3	1	Pave: Pave: Creep	-277.7524	-12.2426	3.8742	0.8501	31.0161	191.9063
3	1	Pave: Pave: Shrinkage	-277.7524	-12.2426	3.8743	0.8501	31.0165	191.9063
3	1	Pave: Pave: PT	-277.7524	-12.2426	3.8743	0.8501	31.0165	191.9063
3	1	Pave: Pave: Other PT	-277.8286	-12.2495	3.8742	0.8502	31.0169	191.9252
3	1	Pave: Pave: step 1	-277.8279	-12.2495	3.7692	0.8502	34.7923	191.9252
3	1	Open Bridge to Traffic:	-277.8288	-11.6321	3.8910	0.8274	35.2983	194.4899
3	1	Open Bridge to Traffic:	-277.8288	-11.6321	3.8911	0.8274	35.2987	194.4899
3	1	Open Bridge to Traffic:	-277.8288	-11.6321	3.8911	0.8274	35.2987	194.4899
3	1	Open Bridge to Traffic:	-277.8125	-11.6306	3.8911	0.8274	35.2986	194.4859
3	1	Open Bridge to Traffic:	-267.9821	-7.8206	5.3719	0.8816	43.6856	235.8378
3	1	Open Bridge to Traffic:	-269.9482	-8.5826	5.0758	0.8708	42.0082	227.5674

RESULT : Member Sectional Forces

Member	Station	Result Case	Force X (kips)	Force Y (kips)	Force Z (kips)	Moment X (kips-ft)	Moment Y (kips-ft)	Moment Z (kips-ft)
3	1	Partial Live Load for	-277.8128	-11.2201	3.9379	0.8135	35.4931	196.1908
3	1	Partial Live Load for	-277.8128	-11.2201	3.9380	0.8135	35.4935	196.1908
3	1	Partial Live Load for	-277.8128	-11.2201	3.9380	0.8135	35.4935	196.1908
3	1	Partial Live Load for	-277.7965	-11.2186	3.9381	0.8135	35.4934	196.1867
3	1	Partial Live Load for	-276.8134	-10.8376	4.0861	0.8189	36.3321	200.3219
3	1	Remove Long Term Live	-276.8502	10.5530	9.2807	0.5994	57.9062	289.1643
3	1	Remove Long Term Live	-276.8502	10.5530	9.2848	0.5994	57.9235	289.1643
3	1	Remove Long Term Live	-276.8502	10.5530	9.2848	0.5994	57.9235	289.1643
3	1	Remove Long Term Live	-264.1288	11.7114	9.3009	0.5718	57.8501	286.0245
3	1	Remove Long Term Live	-265.1118	11.3304	9.1529	0.5664	57.0114	281.8893
3	1	Long Term Performance:	-265.1110	10.9652	9.0446	0.5658	56.5619	280.3728
3	1	Long Term Performance:	-265.1110	10.9652	9.0452	0.5658	56.5643	280.3728
3	1	Long Term Performance:	-265.1110	10.9652	9.0452	0.5658	56.5643	280.3728
3	1	Long Term Performance:	-264.4014	11.0299	9.0461	0.5642	56.5602	280.1980
3	1	Long Term Performance:	-256.5371	14.0779	10.2307	0.6076	63.2698	313.2794
3	1	Long Term Performance:	-254.5710	14.8399	10.5269	0.6185	64.9472	321.5498
3	1	Long Term Performance:	-237.1561	26.6705	12.1687	0.3366	78.9659	289.5327
3	1	Strength Check: Strength	-264.4014	11.0299	9.0461	0.5642	56.5601	280.1980
3	1	Strength Check: Strength	-264.4014	11.0299	9.0461	0.5642	56.5601	280.1980
3	1	Strength Check: Strength	-264.4014	11.0299	9.0461	0.5642	56.5601	280.1980
3	1	Strength Check: Strength	-264.4014	11.0299	9.0461	0.5642	56.5601	280.1979
3	1	Strength Check: Strength	28.6357	37.5118	9.4356	-0.0766	54.9507	207.3958
3	1	Strength Check: Strength	-237.1561	26.6705	12.1687	0.3365	78.9658	289.5327
3	2	Set Precast In Place: Set	0.0000	0.0000	0.0000	0.0000	0.0000	0.0000
3	2	Set Precast In Place: Set	0.0991	0.0000	-14.0008	0.0000	-27.0203	0.0000
3	2	Tension PT: Tension PT:	0.0956	0.0000	-13.5179	0.0000	-23.0092	0.0000
3	2	Tension PT: Tension PT:	0.0956	0.0000	-13.5174	0.0000	-23.0053	0.0000
3	2	Tension PT: Tension PT:	0.0956	0.0000	-13.5174	0.0000	-23.0053	0.0000
3	2	Tension PT: Tension PT:	0.0956	0.0000	-13.5174	0.0000	-23.0053	0.0000
3	2	Tension PT: Tension PT:	-303.6656	-27.7333	-13.9030	0.6570	-22.8619	-40.9034
3	2	Add Superstructure: Add	-303.6657	-27.7194	-13.8751	0.7762	-22.6301	-40.7891
3	2	Add Superstructure: Add	-303.6657	-27.7194	-13.8750	0.7762	-22.6289	-40.7891
3	2	Add Superstructure: Add	-303.6657	-27.7194	-13.8750	0.7762	-22.6289	-40.7891
3	2	Add Superstructure: Add	-303.4950	-27.7038	-13.8748	0.7758	-22.6290	-40.7661

RESULT : Member Sectional Forces

Member	Station	Result Case	Force X (kips)	Force Y (kips)	Force Z (kips)	Moment X (kips-ft)	Moment Y (kips-ft)	Moment Z (kips-ft)
3	2	Add Superstructure: Add	-303.2614	-27.7038	-46.8787	0.7758	-67.1547	-40.7661
3	2	Backfill to Grade: Backfill	-303.2696	-27.6952	-45.7234	0.8699	-57.5587	-40.6950
3	2	Backfill to Grade: Backfill	-303.2696	-27.6952	-45.7227	0.8699	-57.5526	-40.6950
3	2	Backfill to Grade: Backfill	-303.2696	-27.6952	-45.7227	0.8699	-57.5526	-40.6950
3	2	Backfill to Grade: Backfill	-303.0861	-27.6784	-45.7225	0.8695	-57.5529	-40.6706
3	2	Backfill to Grade: Backfill	-274.3793	-146.8274	-46.3251	115.9231	-57.2710	-162.1918
3	2	Backfill to Grade: Backfill	-266.5177	-184.4481	-44.7500	115.9666	-58.0515	-200.9051
3	2	Pave: Pave: Creep	-274.3795	-143.3193	-46.2877	115.7986	-56.9608	-133.0509
3	2	Pave: Pave: Shrinkage	-274.3795	-143.3193	-46.2876	115.7986	-56.9599	-133.0509
3	2	Pave: Pave: PT	-274.3795	-143.3193	-46.2876	115.7986	-56.9599	-133.0509
3	2	Pave: Pave: Other PT	-274.4554	-143.3262	-46.2877	115.7988	-56.9599	-133.0609
3	2	Pave: Pave: step 1	-274.4208	-143.3262	-51.1772	115.7988	-63.5563	-133.0609
3	2	Open Bridge to Traffic:	-274.4217	-142.7087	-51.0554	115.7759	-62.5442	-127.9316
3	2	Open Bridge to Traffic:	-274.4217	-142.7087	-51.0553	115.7759	-62.5434	-127.9316
3	2	Open Bridge to Traffic:	-274.4217	-142.7087	-51.0553	115.7759	-62.5434	-127.9316
3	2	Open Bridge to Traffic:	-274.4055	-142.7073	-51.0552	115.7759	-62.5434	-127.9294
3	2	Open Bridge to Traffic:	-264.4178	-189.7331	-71.8021	115.8302	-94.1648	-176.3210
3	2	Open Bridge to Traffic:	-266.4153	-180.3280	-67.6527	115.8193	-87.8406	-166.6427
3	2	Partial Live Load for	-274.4058	-142.2968	-51.0084	115.7620	-62.1546	-124.5197
3	2	Partial Live Load for	-274.4058	-142.2968	-51.0083	115.7620	-62.1538	-124.5197
3	2	Partial Live Load for	-274.4058	-142.2968	-51.0083	115.7620	-62.1538	-124.5197
3	2	Partial Live Load for	-274.3895	-142.2953	-51.0083	115.7620	-62.1538	-124.5175
3	2	Partial Live Load for	-273.3907	-146.9979	-53.0830	115.7674	-65.3159	-129.3567
3	2	Remove Long Term Live	-273.4275	-125.6072	-47.8885	115.5480	-22.1677	48.3266
3	2	Remove Long Term Live	-273.4275	-125.6072	-47.8843	115.5480	-22.1329	48.3266
3	2	Remove Long Term Live	-273.4275	-125.6072	-47.8843	115.5480	-22.1329	48.3266
3	2	Remove Long Term Live	-260.7223	-124.4489	-47.8683	115.5204	-22.1403	50.0076
3	2	Remove Long Term Live	-261.7211	-119.7463	-45.7936	115.5150	-18.9781	54.8468
3	2	Long Term Performance:	-261.7203	-120.1115	-45.9019	115.5144	-19.8772	51.8137
3	2	Long Term Performance:	-261.7203	-120.1115	-45.9013	115.5144	-19.8723	51.8137
3	2	Long Term Performance:	-261.7203	-120.1115	-45.9013	115.5144	-19.8723	51.8137
3	2	Long Term Performance:	-261.0094	-120.0468	-45.9004	115.5128	-19.8727	51.9067
3	2	Long Term Performance:	-253.0193	-157.6675	-62.4979	115.5562	-45.1698	13.1935
3	2	Long Term Performance:	-251.0218	-167.0727	-66.6472	115.5671	-51.4941	3.5152

RESULT : Member Sectional Forces

Member	Station	Result Case	Force X (kips)	Force Y (kips)	Force Z (kips)	Moment X (kips-ft)	Moment Y (kips-ft)	Moment Z (kips-ft)
3	2	Long Term Performance:	-233.3832	-155.2420	-96.6142	115.2852	-96.2963	20.6339
3	2	Strength Check: Strength	-261.0094	-120.0468	-45.9004	115.5128	-19.8729	51.9067
3	2	Strength Check: Strength	-261.0094	-120.0468	-45.9004	115.5128	-19.8729	51.9067
3	2	Strength Check: Strength	-261.0094	-120.0468	-45.9004	115.5128	-19.8729	51.9067
3	2	Strength Check: Strength	-261.0094	-120.0468	-45.9004	115.5128	-19.8729	51.9068
3	2	Strength Check: Strength	29.0247	-93.5649	-45.5321	114.8855	-20.0082	90.9944
3	2	Strength Check: Strength	-233.3832	-155.2420	-96.6142	115.2851	-96.2965	20.6340
4	0	Set Precast In Place: Set	0.0000	0.0000	0.0000	0.0000	0.0000	0.0000
4	0	Set Precast In Place: Set	-0.1293	0.0000	18.2746	0.0000	-27.0203	0.0000
4	0	Tension PT: Tension PT:	-0.1292	0.0000	18.2575	0.0000	-23.0092	0.0000
4	0	Tension PT: Tension PT:	-0.1292	0.0000	18.2570	0.0000	-23.0053	0.0000
4	0	Tension PT: Tension PT:	-0.1292	0.0000	18.2570	0.0000	-23.0053	0.0000
4	0	Tension PT: Tension PT:	-0.1292	0.0000	18.2570	0.0000	-23.0053	0.0000
4	0	Tension PT: Tension PT:	-303.8922	15.8935	18.1254	-1.0419	-22.8619	-40.8914
4	0	Add Superstructure: Add	-303.8922	15.8442	18.1230	-1.0533	-22.6301	-40.7762
4	0	Add Superstructure: Add	-303.8922	15.8442	18.1229	-1.0533	-22.6289	-40.7762
4	0	Add Superstructure: Add	-303.8922	15.8442	18.1229	-1.0533	-22.6289	-40.7762
4	0	Add Superstructure: Add	-303.7214	15.8365	18.1229	-1.0528	-22.6290	-40.7531
4	0	Add Superstructure: Add	-303.9506	15.8365	50.5107	-1.0528	-67.1547	-40.7531
4	0	Backfill to Grade: Backfill	-303.9501	15.8055	50.4432	-1.0622	-57.5587	-40.6814
4	0	Backfill to Grade: Backfill	-303.9501	15.8055	50.4425	-1.0622	-57.5526	-40.6814
4	0	Backfill to Grade: Backfill	-303.9501	15.8055	50.4425	-1.0622	-57.5526	-40.6814
4	0	Backfill to Grade: Backfill	-303.7665	15.7984	50.4424	-1.0617	-57.5529	-40.6570
4	0	Backfill to Grade: Backfill	-275.0635	61.9291	50.3793	-109.5040	-57.2710	-160.5968
4	0	Backfill to Grade: Backfill	-267.1914	77.1622	50.4523	-107.0420	-58.0515	-199.3271
4	0	Pave: Pave: Creep	-275.0635	56.4548	50.3774	-109.0793	-56.9608	-131.4597
4	0	Pave: Pave: Shrinkage	-275.0635	56.4548	50.3772	-109.0793	-56.9599	-131.4597
4	0	Pave: Pave: PT	-275.0635	56.4548	50.3772	-109.0793	-56.9599	-131.4597
4	0	Pave: Pave: Other PT	-275.1394	56.4595	50.3773	-109.0797	-56.9599	-131.4697
4	0	Pave: Pave: step 1	-275.1734	56.4595	55.1755	-109.0797	-63.5563	-131.4697
4	0	Open Bridge to Traffic:	-275.1733	55.4867	55.1672	-109.0045	-62.5442	-126.3411
4	0	Open Bridge to Traffic:	-275.1733	55.4867	55.1670	-109.0045	-62.5434	-126.3411
4	0	Open Bridge to Traffic:	-275.1733	55.4867	55.1670	-109.0045	-62.5434	-126.3411
4	0	Open Bridge to Traffic:	-275.1571	55.4862	55.1671	-109.0044	-62.5434	-126.3389

RESULT : Member Sectional Forces

Member	Station	Result Case	Force X (kips)	Force Y (kips)	Force Z (kips)	Moment X (kips-ft)	Moment Y (kips-ft)	Moment Z (kips-ft)
4	0	Open Bridge to Traffic:	-265.4746	74.5276	77.5499	-105.9270	-94.1648	-174.7519
4	0	Open Bridge to Traffic:	-267.4111	70.7193	73.0733	-106.5425	-87.8406	-165.0693
4	0	Partial Live Load for	-275.1570	54.8390	55.1638	-108.9546	-62.1546	-122.9297
4	0	Partial Live Load for	-275.1570	54.8390	55.1637	-108.9546	-62.1538	-122.9297
4	0	Partial Live Load for	-275.1570	54.8390	55.1637	-108.9546	-62.1538	-122.9297
4	0	Partial Live Load for	-275.1407	54.8384	55.1637	-108.9545	-62.1538	-122.9275
4	0	Partial Live Load for	-274.1725	56.7425	57.4020	-108.6468	-65.3159	-127.7688
4	0	Remove Long Term Live	-274.1702	22.9245	57.0763	-106.0999	-22.1677	49.8949
4	0	Remove Long Term Live	-274.1701	22.9245	57.0683	-106.0999	-22.1329	49.8949
4	0	Remove Long Term Live	-274.1701	22.9245	57.0683	-106.0999	-22.1329	49.8949
4	0	Remove Long Term Live	-261.4648	22.3078	57.0702	-106.0578	-22.1403	51.5754
4	0	Remove Long Term Live	-262.4331	20.4036	54.8319	-106.3656	-18.9781	56.4167
4	0	Long Term Performance:	-262.4332	21.0035	54.8478	-106.4104	-19.8772	53.3840
4	0	Long Term Performance:	-262.4332	21.0035	54.8477	-106.4104	-19.8723	53.3840
4	0	Long Term Performance:	-262.4332	21.0035	54.8477	-106.4104	-19.8723	53.3840
4	0	Long Term Performance:	-261.7223	20.9690	54.8478	-106.4080	-19.8727	53.4770
4	0	Long Term Performance:	-253.9763	36.2021	72.7541	-103.9461	-45.1698	14.7466
4	0	Long Term Performance:	-252.0398	40.0104	77.2306	-103.3306	-51.4941	5.0640
4	0	Long Term Performance:	-234.8385	33.5762	109.0604	-102.8986	-96.2963	22.1778
4	0	Strength Check: Strength	-261.7223	20.9690	54.8478	-106.4080	-19.8729	53.4770
4	0	Strength Check: Strength	-261.7223	20.9690	54.8478	-106.4080	-19.8729	53.4770
4	0	Strength Check: Strength	-261.7223	20.9690	54.8478	-106.4080	-19.8729	53.4770
4	0	Strength Check: Strength	-261.7223	20.9690	54.8478	-106.4080	-19.8729	53.4770
4	0	Strength Check: Strength	28.3135	5.7380	54.9775	-105.4113	-20.0082	92.5532
4	0	Strength Check: Strength	-234.8385	33.5762	109.0604	-102.8986	-96.2965	22.1778
4	1	Set Precast In Place: Set	0.0000	0.0000	0.0000	0.0000	0.0000	0.0000
4	1	Set Precast In Place: Set	-0.0986	0.0000	13.9292	0.0000	-10.9180	0.0000
4	1	Tension PT: Tension PT:	-0.0984	0.0000	13.9121	0.0000	-6.9240	0.0000
4	1	Tension PT: Tension PT:	-0.0984	0.0000	13.9116	0.0000	-6.9205	0.0000
4	1	Tension PT: Tension PT:	-0.0984	0.0000	13.9116	0.0000	-6.9205	0.0000
4	1	Tension PT: Tension PT:	-0.0984	0.0000	13.9116	0.0000	-6.9205	0.0000
4	1	Tension PT: Tension PT:	-303.1040	15.8935	13.7853	-1.0433	-6.8671	-25.1952
4	1	Add Superstructure: Add	-303.1040	15.8442	13.7829	-1.0547	-6.6377	-25.1292
4	1	Add Superstructure: Add	-303.1040	15.8442	13.7828	-1.0547	-6.6367	-25.1292

RESULT : Member Sectional Forces

Member	Station	Result Case	Force X (kips)	Force Y (kips)	Force Z (kips)	Moment X (kips-ft)	Moment Y (kips-ft)	Moment Z (kips-ft)
4	1	Add Superstructure: Add	-303.1040	15.8442	13.7828	-1.0547	-6.6367	-25.1292
4	1	Add Superstructure: Add	-302.9343	15.8365	13.7828	-1.0542	-6.6369	-25.1132
4	1	Add Superstructure: Add	-303.1085	15.8365	38.3946	-1.0542	-22.6620	-25.1132
4	1	Backfill to Grade: Backfill	-303.1080	15.8055	38.3271	-1.0636	-13.1334	-25.0724
4	1	Backfill to Grade: Backfill	-303.1080	15.8055	38.3263	-1.0636	-13.1282	-25.0724
4	1	Backfill to Grade: Backfill	-303.1080	15.8055	38.3263	-1.0636	-13.1282	-25.0724
4	1	Backfill to Grade: Backfill	-302.9251	15.7984	38.3263	-1.0631	-13.1285	-25.0547
4	1	Backfill to Grade: Backfill	-274.2222	30.2783	38.2632	-81.8247	-12.9097	-114.6734
4	1	Backfill to Grade: Backfill	-266.3500	35.6952	38.3362	-79.3627	-13.6173	-143.0745
4	1	Pave: Pave: Creep	-274.2222	24.8040	38.2612	-81.4000	-12.6014	-91.0108
4	1	Pave: Pave: Shrinkage	-274.2221	24.8040	38.2611	-81.4000	-12.6007	-91.0108
4	1	Pave: Pave: PT	-274.2221	24.8040	38.2611	-81.4000	-12.6007	-91.0108
4	1	Pave: Pave: Other PT	-274.2977	24.8087	38.2612	-81.4004	-12.6006	-91.0163
4	1	Pave: Pave: step 1	-274.3235	24.8087	41.9074	-81.4004	-14.9747	-91.0163
4	1	Open Bridge to Traffic:	-274.3234	23.8360	41.8990	-81.3252	-13.9710	-86.8605
4	1	Open Bridge to Traffic:	-274.3234	23.8360	41.8989	-81.3252	-13.9702	-86.8605
4	1	Open Bridge to Traffic:	-274.3234	23.8360	41.8989	-81.3252	-13.9702	-86.8605
4	1	Open Bridge to Traffic:	-274.3072	23.8354	41.8989	-81.3251	-13.9703	-86.8589
4	1	Open Bridge to Traffic:	-264.5869	30.6065	58.9298	-78.2477	-25.8843	-122.3603
4	1	Open Bridge to Traffic:	-266.5309	29.2522	55.5236	-78.8632	-23.5015	-115.2600
4	1	Partial Live Load for	-274.3072	23.1882	41.8957	-81.2753	-13.5846	-84.0968
4	1	Partial Live Load for	-274.3072	23.1882	41.8956	-81.2753	-13.5839	-84.0968
4	1	Partial Live Load for	-274.3072	23.1882	41.8956	-81.2753	-13.5839	-84.0968
4	1	Partial Live Load for	-274.2910	23.1876	41.8956	-81.2752	-13.5839	-84.0952
4	1	Partial Live Load for	-273.3189	23.8647	43.5987	-80.9675	-14.7754	-87.6453
4	1	Remove Long Term Live	-273.3166	-9.9534	43.2730	-78.4206	28.0472	56.1995
4	1	Remove Long Term Live	-273.3166	-9.9534	43.2650	-78.4206	28.0739	56.1995
4	1	Remove Long Term Live	-273.3166	-9.9534	43.2650	-78.4206	28.0739	56.1995
4	1	Remove Long Term Live	-260.6275	-10.5701	43.2667	-78.3784	28.0675	57.2734
4	1	Remove Long Term Live	-261.5995	-11.2472	41.5637	-78.6862	29.2589	60.8236
4	1	Long Term Performance:	-261.5997	-10.6473	41.5795	-78.7310	28.3758	58.3908
4	1	Long Term Performance:	-261.5997	-10.6473	41.5795	-78.7310	28.3806	58.3908
4	1	Long Term Performance:	-261.5997	-10.6473	41.5795	-78.7310	28.3806	58.3908
4	1	Long Term Performance:	-260.8875	-10.6818	41.5796	-78.7286	28.3804	58.4485

RESULT : Member Sectional Forces

Member	Station	Result Case	Force X (kips)	Force Y (kips)	Force Z (kips)	Moment X (kips-ft)	Moment Y (kips-ft)	Moment Z (kips-ft)
4	1	Long Term Performance:	-253.1112	-5.2649	55.2042	-76.2667	18.8491	30.0473
4	1	Long Term Performance:	-251.1671	-3.9107	58.6104	-75.6512	16.4663	22.9471
4	1	Long Term Performance:	-233.9119	-10.3449	82.8198	-75.2193	-0.3155	33.6264
4	1	Strength Check: Strength	-260.8875	-10.6818	41.5796	-78.7286	28.3801	58.4485
4	1	Strength Check: Strength	-260.8875	-10.6818	41.5796	-78.7286	28.3801	58.4485
4	1	Strength Check: Strength	-260.8875	-10.6818	41.5796	-78.7286	28.3801	58.4485
4	1	Strength Check: Strength	-260.8875	-10.6818	41.5796	-78.7286	28.3801	58.4485
4	1	Strength Check: Strength	28.4074	-25.9128	41.7040	-77.7306	28.3338	82.4806
4	1	Strength Check: Strength	-233.9119	-10.3449	82.8198	-75.2192	-0.3158	33.6265
4	2	Set Precast In Place: Set	0.0000	0.0000	0.0000	0.0000	0.0000	0.0000
4	2	Set Precast In Place: Set	-0.0678	0.0000	9.5837	0.0000	0.8387	0.0000
4	2	Tension PT: Tension PT:	-0.0677	0.0000	9.5666	0.0000	4.8157	0.0000
4	2	Tension PT: Tension PT:	-0.0677	0.0000	9.5661	0.0000	4.8186	0.0000
4	2	Tension PT: Tension PT:	-0.0677	0.0000	9.5661	0.0000	4.8186	0.0000
4	2	Tension PT: Tension PT:	-0.0677	0.0000	9.5661	0.0000	4.8186	0.0000
4	2	Tension PT: Tension PT:	-302.4643	15.8935	9.4441	-1.0460	4.7835	-9.6868
4	2	Add Superstructure: Add	-302.4643	15.8442	9.4417	-1.0574	5.0106	-9.6702
4	2	Add Superstructure: Add	-302.4643	15.8442	9.4416	-1.0574	5.0114	-9.6702
4	2	Add Superstructure: Add	-302.4643	15.8442	9.4416	-1.0574	5.0114	-9.6702
4	2	Add Superstructure: Add	-302.2924	15.8365	9.4416	-1.0569	5.0114	-9.6632
4	2	Add Superstructure: Add	-302.4115	15.8365	26.2775	-1.0569	9.7106	-9.6632
4	2	Backfill to Grade: Backfill	-302.4111	15.8055	26.2100	-1.0663	19.1717	-9.6534
4	2	Backfill to Grade: Backfill	-302.4110	15.8055	26.2092	-1.0663	19.1762	-9.6534
4	2	Backfill to Grade: Backfill	-302.4110	15.8055	26.2092	-1.0663	19.1762	-9.6534
4	2	Backfill to Grade: Backfill	-302.2243	15.7984	26.2092	-1.0658	19.1761	-9.6453
4	2	Backfill to Grade: Backfill	-273.5214	-1.5525	26.1461	-54.1468	19.3317	-100.6844
4	2	Backfill to Grade: Backfill	-265.6492	-5.9998	26.2190	-51.6848	18.6971	-128.5968
4	2	Pave: Pave: Creep	-273.5214	-7.0268	26.1441	-53.7221	19.6380	-82.4963
4	2	Pave: Pave: Shrinkage	-273.5214	-7.0268	26.1440	-53.7221	19.6387	-82.4963
4	2	Pave: Pave: PT	-273.5214	-7.0268	26.1440	-53.7221	19.6387	-82.4963
4	2	Pave: Pave: Other PT	-273.5962	-7.0221	26.1441	-53.7224	19.6388	-82.4975
4	2	Pave: Pave: step 1	-273.6138	-7.0221	28.6383	-53.7224	20.3350	-82.4975
4	2	Open Bridge to Traffic:	-273.6138	-7.9948	28.6299	-53.6472	21.3304	-79.3145
4	2	Open Bridge to Traffic:	-273.6138	-7.9948	28.6298	-53.6472	21.3310	-79.3145

RESULT : Member Sectional Forces

Member	Station	Result Case	Force X (kips)	Force Y (kips)	Force Z (kips)	Moment X (kips-ft)	Moment Y (kips-ft)	Moment Z (kips-ft)
4	2	Open Bridge to Traffic:	-273.6138	-7.9948	28.6298	-53.6472	21.3310	-79.3145
4	2	Open Bridge to Traffic:	-273.5972	-7.9954	28.6298	-53.6472	21.3310	-79.3137
4	2	Open Bridge to Traffic:	-263.8389	-13.5546	40.3087	-50.5698	23.7722	-114.2041
4	2	Open Bridge to Traffic:	-265.7906	-12.4428	37.9729	-51.1852	23.2840	-107.2260
4	2	Partial Live Load for	-273.5971	-8.6426	28.6266	-53.5973	21.7135	-77.1989
4	2	Partial Live Load for	-273.5971	-8.6426	28.6265	-53.5973	21.7141	-77.1989
4	2	Partial Live Load for	-273.5971	-8.6426	28.6265	-53.5973	21.7141	-77.1989
4	2	Partial Live Load for	-273.5804	-8.6432	28.6265	-53.5973	21.7141	-77.1981
4	2	Partial Live Load for	-272.6046	-9.1991	29.7944	-53.2896	21.9582	-80.6871
4	2	Remove Long Term Live	-272.6023	-43.0172	29.4687	-50.7427	64.4550	29.3387
4	2	Remove Long Term Live	-272.6023	-43.0172	29.4607	-50.7427	64.4737	29.3387
4	2	Remove Long Term Live	-272.6023	-43.0172	29.4607	-50.7427	64.4737	29.3387
4	2	Remove Long Term Live	-259.8747	-43.6339	29.4627	-50.7007	64.4715	29.7719
4	2	Remove Long Term Live	-260.8505	-43.0780	28.2948	-51.0084	64.2274	33.2610
4	2	Long Term Performance:	-260.8506	-42.4781	28.3107	-51.0533	63.3601	31.4281
4	2	Long Term Performance:	-260.8506	-42.4781	28.3106	-51.0533	63.3648	31.4281
4	2	Long Term Performance:	-260.8506	-42.4781	28.3106	-51.0533	63.3648	31.4281
4	2	Long Term Performance:	-260.1380	-42.5125	28.3107	-51.0509	63.3647	31.4510
4	2	Long Term Performance:	-252.3315	-46.9599	37.6538	-48.5889	65.3176	3.5386
4	2	Long Term Performance:	-250.3798	-48.0718	39.9896	-47.9734	65.8058	-3.4395
4	2	Long Term Performance:	-233.0707	-54.5060	56.5786	-47.5415	69.4238	0.8056
4	2	Strength Check: Strength	-260.1380	-42.5126	28.3107	-51.0509	63.3645	31.4510
4	2	Strength Check: Strength	-260.1380	-42.5126	28.3107	-51.0509	63.3645	31.4510
4	2	Strength Check: Strength	-260.1380	-42.5126	28.3107	-51.0509	63.3645	31.4510
4	2	Strength Check: Strength	-260.1380	-42.5126	28.3107	-51.0509	63.3645	31.4510
4	2	Strength Check: Strength	28.5013	-57.7436	28.4305	-50.0499	63.4019	40.6663
4	2	Strength Check: Strength	-233.0706	-54.5060	56.5786	-47.5415	69.4236	0.8056
5	0	Set Precast In Place: Set	0.0000	0.0000	0.0000	0.0000	0.0000	0.0000
5	0	Set Precast In Place: Set	-0.0678	0.0000	9.5837	0.0000	0.8387	0.0000
5	0	Tension PT: Tension PT:	-0.0677	0.0000	9.5666	0.0000	4.8157	0.0000
5	0	Tension PT: Tension PT:	-0.0677	0.0000	9.5661	0.0000	4.8186	0.0000
5	0	Tension PT: Tension PT:	-0.0677	0.0000	9.5661	0.0000	4.8186	0.0000
5	0	Tension PT: Tension PT:	-0.0677	0.0000	9.5661	0.0000	4.8186	0.0000
5	0	Tension PT: Tension PT:	-302.4643	2.3988	9.4441	0.2390	4.7835	-9.6959

RESULT : Member Sectional Forces

Member	Station	Result Case	Force X (kips)	Force Y (kips)	Force Z (kips)	Moment X (kips-ft)	Moment Y (kips-ft)	Moment Z (kips-ft)
5	0	Add Superstructure: Add	-302.4643	2.3882	9.4417	0.2240	5.0106	-9.6792
5	0	Add Superstructure: Add	-302.4643	2.3882	9.4416	0.2240	5.0114	-9.6792
5	0	Add Superstructure: Add	-302.4643	2.3882	9.4416	0.2240	5.0114	-9.6792
5	0	Add Superstructure: Add	-302.2924	2.3869	9.4416	0.2239	5.0114	-9.6723
5	0	Add Superstructure: Add	-302.4115	2.3869	26.2775	0.2239	9.7106	-9.6723
5	0	Backfill to Grade: Backfill	-302.4111	2.3804	26.2100	0.2121	19.1717	-9.6624
5	0	Backfill to Grade: Backfill	-302.4110	2.3804	26.2092	0.2121	19.1762	-9.6624
5	0	Backfill to Grade: Backfill	-302.4110	2.3804	26.2092	0.2121	19.1762	-9.6624
5	0	Backfill to Grade: Backfill	-302.2243	2.3792	26.2092	0.2120	19.1761	-9.6543
5	0	Backfill to Grade: Backfill	-273.5214	100.6888	26.1461	-63.8829	19.3317	-100.6155
5	0	Backfill to Grade: Backfill	-265.6492	131.0267	26.2190	-64.7335	18.6971	-128.5044
5	0	Pave: Pave: Creep	-273.5214	100.9093	26.1441	-64.0005	19.6380	-82.4235
5	0	Pave: Pave: Shrinkage	-273.5214	100.9093	26.1440	-64.0005	19.6387	-82.4235
5	0	Pave: Pave: PT	-273.5214	100.9093	26.1440	-64.0005	19.6387	-82.4235
5	0	Pave: Pave: Other PT	-273.5962	100.9090	26.1441	-64.0004	19.6388	-82.4248
5	0	Pave: Pave: step 1	-273.6138	100.9090	28.6383	-64.0004	20.3350	-82.4248
5	0	Open Bridge to Traffic:	-273.6138	100.9446	28.6299	-64.0213	21.3304	-79.2411
5	0	Open Bridge to Traffic:	-273.6138	100.9446	28.6298	-64.0213	21.3310	-79.2411
5	0	Open Bridge to Traffic:	-273.6138	100.9446	28.6298	-64.0213	21.3310	-79.2411
5	0	Open Bridge to Traffic:	-273.5972	100.9445	28.6298	-64.0213	21.3310	-79.2403
5	0	Open Bridge to Traffic:	-263.8389	138.8669	40.3087	-65.0845	23.7722	-114.1014
5	0	Open Bridge to Traffic:	-265.7906	131.2824	37.9729	-64.8718	23.2840	-107.1292
5	0	Partial Live Load for	-273.5971	100.9680	28.6266	-64.0353	21.7135	-77.1250
5	0	Partial Live Load for	-273.5971	100.9680	28.6265	-64.0353	21.7141	-77.1250
5	0	Partial Live Load for	-273.5971	100.9680	28.6265	-64.0353	21.7141	-77.1250
5	0	Partial Live Load for	-273.5804	100.9678	28.6265	-64.0353	21.7141	-77.1242
5	0	Partial Live Load for	-272.6046	104.7601	29.7944	-64.1416	21.9582	-80.6103
5	0	Remove Long Term Live	-272.6023	105.9983	29.4687	-64.9330	64.4550	29.4392
5	0	Remove Long Term Live	-272.6023	105.9983	29.4607	-64.9330	64.4737	29.4392
5	0	Remove Long Term Live	-272.6023	105.9983	29.4607	-64.9330	64.4737	29.4392
5	0	Remove Long Term Live	-259.8747	105.9161	29.4627	-64.9419	64.4715	29.8727
5	0	Remove Long Term Live	-260.8505	102.1239	28.2948	-64.8356	64.2274	33.3588
5	0	Long Term Performance:	-260.8506	102.1017	28.3107	-64.8212	63.3601	31.5255
5	0	Long Term Performance:	-260.8506	102.1017	28.3106	-64.8212	63.3648	31.5255

RESULT : Member Sectional Forces

Member	Station	Result Case	Force X (kips)	Force Y (kips)	Force Z (kips)	Moment X (kips-ft)	Moment Y (kips-ft)	Moment Z (kips-ft)
5	0	Long Term Performance:	-260.8506	102.1017	28.3106	-64.8212	63.3648	31.5255
5	0	Long Term Performance:	-260.1380	102.0974	28.3107	-64.8217	63.3647	31.5484
5	0	Long Term Performance:	-252.3315	132.4353	37.6538	-65.6723	65.3176	3.6595
5	0	Long Term Performance:	-250.3798	140.0198	39.9896	-65.8849	65.8058	-3.3127
5	0	Long Term Performance:	-233.0707	139.1188	56.5786	-65.9799	69.4238	0.9360
5	0	Strength Check: Strength	-260.1380	102.0974	28.3107	-64.8217	63.3645	31.5484
5	0	Strength Check: Strength	-260.1380	102.0974	28.3107	-64.8217	63.3645	31.5484
5	0	Strength Check: Strength	-260.1380	102.0974	28.3107	-64.8217	63.3645	31.5484
5	0	Strength Check: Strength	-260.1380	102.0974	28.3107	-64.8217	63.3645	31.5484
5	0	Strength Check: Strength	28.5013	99.7882	28.4305	-65.0512	63.4019	40.7725
5	0	Strength Check: Strength	-233.0706	139.1188	56.5786	-65.9799	69.4236	0.9360
5	1	Set Precast In Place: Set	0.0000	0.0000	0.0000	0.0000	0.0000	0.0000
5	1	Set Precast In Place: Set	0.0307	0.0000	-4.3346	0.0000	9.1856	0.0000
5	1	Tension PT: Tension PT:	0.0308	0.0000	-4.3517	0.0000	13.1082	0.0000
5	1	Tension PT: Tension PT:	0.0308	0.0000	-4.3522	0.0000	13.1095	0.0000
5	1	Tension PT: Tension PT:	0.0308	0.0000	-4.3522	0.0000	13.1095	0.0000
5	1	Tension PT: Tension PT:	0.0308	0.0000	-4.3522	0.0000	13.1095	0.0000
5	1	Tension PT: Tension PT:	-299.9182	2.3988	-4.4568	0.2281	12.8933	-3.6168
5	1	Add Superstructure: Add	-299.9182	2.3882	-4.4592	0.2130	13.1129	-3.6338
5	1	Add Superstructure: Add	-299.9182	2.3882	-4.4594	0.2130	13.1133	-3.6338
5	1	Add Superstructure: Add	-299.9182	2.3882	-4.4594	0.2130	13.1133	-3.6338
5	1	Add Superstructure: Add	-299.7440	2.3869	-4.4593	0.2129	13.1135	-3.6323
5	1	Add Superstructure: Add	-299.6882	2.3869	-12.3527	0.2129	32.0325	-3.6323
5	1	Backfill to Grade: Backfill	-299.6877	2.3804	-12.4202	0.2011	41.2789	-3.6431
5	1	Backfill to Grade: Backfill	-299.6877	2.3804	-12.4210	0.2011	41.2809	-3.6431
5	1	Backfill to Grade: Backfill	-299.6877	2.3804	-12.4210	0.2011	41.2809	-3.6431
5	1	Backfill to Grade: Backfill	-299.4972	2.3792	-12.4210	0.2011	41.2811	-3.6412
5	1	Backfill to Grade: Backfill	-270.7942	-1.3028	-12.4841	25.6310	41.2360	56.1215
5	1	Backfill to Grade: Backfill	-262.9221	-2.4878	-12.4111	24.7804	40.8336	74.6301
5	1	Pave: Pave: Creep	-270.7942	-1.0823	-12.4860	25.5133	41.5361	75.0148
5	1	Pave: Pave: Shrinkage	-270.7942	-1.0823	-12.4861	25.5133	41.5364	75.0148
5	1	Pave: Pave: PT	-270.7942	-1.0823	-12.4861	25.5133	41.5364	75.0148
5	1	Pave: Pave: Other PT	-270.8683	-1.0826	-12.4861	25.5134	41.5369	75.0122
5	1	Pave: Pave: step 1	-270.8600	-1.0826	-13.6555	25.5134	44.3397	75.0122

RESULT : Member Sectional Forces

Member	Station	Result Case	Force X (kips)	Force Y (kips)	Force Z (kips)	Moment X (kips-ft)	Moment Y (kips-ft)	Moment Z (kips-ft)
5	1	Open Bridge to Traffic:	-270.8600	-1.0469	-13.6638	25.4926	45.3085	78.3092
5	1	Open Bridge to Traffic:	-270.8600	-1.0469	-13.6639	25.4926	45.3088	78.3092
5	1	Open Bridge to Traffic:	-270.8600	-1.0469	-13.6639	25.4926	45.3088	78.3092
5	1	Open Bridge to Traffic:	-270.8430	-1.0471	-13.6639	25.4926	45.3088	78.3094
5	1	Open Bridge to Traffic:	-260.9643	-2.5284	-19.0055	24.4294	57.8272	101.4452
5	1	Open Bridge to Traffic:	-262.9400	-2.2321	-17.9372	24.6421	55.3235	96.8180
5	1	Partial Live Load for	-270.8429	-1.0236	-13.6671	25.4786	45.6810	80.4992
5	1	Partial Live Load for	-270.8429	-1.0236	-13.6672	25.4786	45.6813	80.4992
5	1	Partial Live Load for	-270.8429	-1.0236	-13.6672	25.4786	45.6813	80.4992
5	1	Partial Live Load for	-270.8258	-1.0237	-13.6672	25.4786	45.6813	80.4993
5	1	Partial Live Load for	-269.8379	-1.1719	-14.2014	25.3723	46.9332	82.8129
5	1	Remove Long Term Live	-269.8356	0.0664	-14.5271	24.5808	88.3942	196.8003
5	1	Remove Long Term Live	-269.8356	0.0664	-14.5351	24.5808	88.3874	196.8003
5	1	Remove Long Term Live	-269.8356	0.0664	-14.5351	24.5808	88.3874	196.8003
5	1	Remove Long Term Live	-257.0694	-0.0158	-14.5328	24.5718	88.3948	196.9483
5	1	Remove Long Term Live	-258.0573	0.1323	-13.9987	24.6781	87.1430	194.6348
5	1	Long Term Performance:	-258.0574	0.1102	-13.9828	24.6925	86.3262	192.7310
5	1	Long Term Performance:	-258.0574	0.1102	-13.9829	24.6925	86.3307	192.7310
5	1	Long Term Performance:	-258.0574	0.1102	-13.9829	24.6925	86.3307	192.7310
5	1	Long Term Performance:	-257.3444	0.1058	-13.9827	24.6920	86.3309	192.7400
5	1	Long Term Performance:	-249.4415	-1.0792	-18.2560	23.8414	96.3456	211.2486
5	1	Long Term Performance:	-247.4657	-1.3755	-19.3243	23.6288	98.8493	215.8758
5	1	Long Term Performance:	-229.9850	-2.2765	-26.9943	23.5338	116.6499	217.2591
5	1	Strength Check: Strength	-257.3444	0.1058	-13.9827	24.6920	86.3307	192.7400
5	1	Strength Check: Strength	-257.3444	0.1058	-13.9827	24.6920	86.3307	192.7400
5	1	Strength Check: Strength	-257.3444	0.1058	-13.9827	24.6920	86.3307	192.7400
5	1	Strength Check: Strength	-257.3443	0.1058	-13.9827	24.6920	86.3307	192.7400
5	1	Strength Check: Strength	28.8007	-2.2034	-13.8806	24.4737	86.5383	196.1988
5	1	Strength Check: Strength	-229.9849	-2.2765	-26.9942	23.5338	116.6496	217.2591
5	2	Set Precast In Place: Set	0.0000	0.0000	0.0000	0.0000	0.0000	0.0000
5	2	Set Precast In Place: Set	0.1292	0.0000	-18.2528	0.0000	-26.7316	0.0000
5	2	Tension PT: Tension PT:	0.1293	0.0000	-18.2699	0.0000	-22.8633	0.0000
5	2	Tension PT: Tension PT:	0.1293	0.0000	-18.2704	0.0000	-22.8636	0.0000
5	2	Tension PT: Tension PT:	0.1293	0.0000	-18.2704	0.0000	-22.8636	0.0000

RESULT : Member Sectional Forces

Member	Station	Result Case	Force X (kips)	Force Y (kips)	Force Z (kips)	Moment X (kips-ft)	Moment Y (kips-ft)	Moment Z (kips-ft)
5	2	Tension PT: Tension PT:	0.1293	0.0000	-18.2704	0.0000	-22.8636	0.0000
5	2	Tension PT: Tension PT:	-297.3529	2.3988	-18.3576	0.2170	-23.1486	2.4500
5	2	Add Superstructure: Add	-297.3529	2.3882	-18.3600	0.2020	-22.9365	2.3993
5	2	Add Superstructure: Add	-297.3529	2.3882	-18.3602	0.2020	-22.9366	2.3993
5	2	Add Superstructure: Add	-297.3529	2.3882	-18.3602	0.2020	-22.9366	2.3993
5	2	Add Superstructure: Add	-297.1810	2.3869	-18.3601	0.2019	-22.9366	2.3982
5	2	Add Superstructure: Add	-296.9502	2.3869	-50.9828	0.2019	-68.4436	2.3982
5	2	Backfill to Grade: Backfill	-296.9497	2.3804	-51.0503	0.1901	-59.4119	2.3668
5	2	Backfill to Grade: Backfill	-296.9497	2.3804	-51.0510	0.1901	-59.4123	2.3668
5	2	Backfill to Grade: Backfill	-296.9497	2.3804	-51.0510	0.1901	-59.4123	2.3668
5	2	Backfill to Grade: Backfill	-296.7608	2.3792	-51.0510	0.1900	-59.4123	2.3658
5	2	Backfill to Grade: Backfill	-268.0579	-104.2485	-51.1141	115.1448	-59.6581	-113.0264
5	2	Backfill to Grade: Backfill	-260.1857	-137.1091	-51.0412	114.2942	-59.8285	-148.6147
5	2	Pave: Pave: Creep	-268.0578	-104.0279	-51.1161	115.0272	-59.3642	-93.4317
5	2	Pave: Pave: Shrinkage	-268.0578	-104.0279	-51.1162	115.0272	-59.3643	-93.4317
5	2	Pave: Pave: PT	-268.0578	-104.0279	-51.1162	115.0272	-59.3643	-93.4317
5	2	Pave: Pave: Other PT	-268.1375	-104.0282	-51.1162	115.0273	-59.3642	-93.4318
5	2	Pave: Pave: step 1	-268.1033	-104.0282	-55.9492	115.0273	-66.1060	-93.4318
5	2	Open Bridge to Traffic:	-268.1032	-103.9926	-55.9575	115.0065	-65.1637	-90.0214
5	2	Open Bridge to Traffic:	-268.1032	-103.9926	-55.9576	115.0065	-65.1638	-90.0214
5	2	Open Bridge to Traffic:	-268.1032	-103.9926	-55.9576	115.0065	-65.1638	-90.0214
5	2	Open Bridge to Traffic:	-268.0866	-103.9927	-55.9576	115.0065	-65.1638	-90.0215
5	2	Open Bridge to Traffic:	-258.0875	-145.0685	-78.3196	113.9433	-96.6980	-134.5068
5	2	Open Bridge to Traffic:	-260.0873	-136.8533	-73.8472	114.1559	-90.3911	-125.6097
5	2	Partial Live Load for	-268.0865	-103.9693	-55.9608	114.9925	-64.8018	-87.7571
5	2	Partial Live Load for	-268.0865	-103.9693	-55.9609	114.9925	-64.8018	-87.7571
5	2	Partial Live Load for	-268.0865	-103.9693	-55.9609	114.9925	-64.8018	-87.7571
5	2	Partial Live Load for	-268.0697	-103.9694	-55.9609	114.9925	-64.8018	-87.7572
5	2	Partial Live Load for	-267.0698	-108.0770	-58.1971	114.8861	-67.9553	-92.2057
5	2	Remove Long Term Live	-267.0675	-106.8387	-58.5228	114.0947	-27.5300	25.7197
5	2	Remove Long Term Live	-267.0674	-106.8387	-58.5309	114.0947	-27.5624	25.7197
5	2	Remove Long Term Live	-267.0674	-106.8387	-58.5309	114.0947	-27.5624	25.7197
5	2	Remove Long Term Live	-254.3311	-106.9209	-58.5288	114.0858	-27.5508	25.6248
5	2	Remove Long Term Live	-255.3310	-102.8133	-56.2926	114.1921	-24.3973	30.0734

RESULT : Member Sectional Forces

Member	Station	Result Case	Force X (kips)	Force Y (kips)	Force Z (kips)	Moment X (kips-ft)	Moment Y (kips-ft)	Moment Z (kips-ft)
5	2	Long Term Performance:	-255.3311	-102.8355	-56.2767	114.2065	-25.1637	28.0991
5	2	Long Term Performance:	-255.3311	-102.8355	-56.2768	114.2065	-25.1594	28.0991
5	2	Long Term Performance:	-255.3311	-102.8355	-56.2768	114.2065	-25.1594	28.0991
5	2	Long Term Performance:	-254.6170	-102.8398	-56.2767	114.2060	-25.1587	28.0937
5	2	Long Term Performance:	-246.6177	-135.7004	-74.1663	113.3554	-50.3861	-7.4945
5	2	Long Term Performance:	-244.6179	-143.9156	-78.6387	113.1428	-56.6929	-16.3915
5	2	Long Term Performance:	-226.9655	-144.8166	-110.5676	113.0478	-101.8601	-17.8737
5	2	Strength Check: Strength	-254.6170	-102.8398	-56.2767	114.2060	-25.1589	28.0938
5	2	Strength Check: Strength	-254.6170	-102.8398	-56.2767	114.2060	-25.1589	28.0938
5	2	Strength Check: Strength	-254.6170	-102.8398	-56.2767	114.2060	-25.1589	28.0938
5	2	Strength Check: Strength	-254.6169	-102.8398	-56.2767	114.2060	-25.1589	28.0938
5	2	Strength Check: Strength	29.1001	-105.1490	-56.1917	113.9985	-24.8865	25.7464
5	2	Strength Check: Strength	-226.9654	-144.8166	-110.5676	113.0478	-101.8603	-17.8737
6	0	Set Precast In Place: Set	0.0000	0.0000	0.0000	0.0000	0.0000	0.0000
6	0	Set Precast In Place: Set	-0.1166	0.0000	16.4803	0.0000	-26.7316	0.0000
6	0	Tension PT: Tension PT:	-0.1168	0.0000	16.5068	0.0000	-22.8633	0.0000
6	0	Tension PT: Tension PT:	-0.1168	0.0000	16.5062	0.0000	-22.8636	0.0000
6	0	Tension PT: Tension PT:	-0.1168	0.0000	16.5062	0.0000	-22.8636	0.0000
6	0	Tension PT: Tension PT:	-0.1168	0.0000	16.5062	0.0000	-22.8636	0.0000
6	0	Tension PT: Tension PT:	-297.5952	-1.3159	15.8845	-0.5982	-23.1486	2.4558
6	0	Add Superstructure: Add	-297.5952	-1.3024	15.8871	-0.6133	-22.9365	2.4051
6	0	Add Superstructure: Add	-297.5952	-1.3024	15.8869	-0.6133	-22.9366	2.4051
6	0	Add Superstructure: Add	-297.5952	-1.3024	15.8869	-0.6133	-22.9366	2.4051
6	0	Add Superstructure: Add	-297.4233	-1.3021	15.8874	-0.6131	-22.9366	2.4039
6	0	Add Superstructure: Add	-297.6476	-1.3021	47.5823	-0.6131	-68.4436	2.4039
6	0	Backfill to Grade: Backfill	-297.6479	-1.2938	47.6282	-0.6246	-59.4119	2.3726
6	0	Backfill to Grade: Backfill	-297.6479	-1.2938	47.6274	-0.6246	-59.4123	2.3726
6	0	Backfill to Grade: Backfill	-297.6479	-1.2938	47.6274	-0.6246	-59.4123	2.3726
6	0	Backfill to Grade: Backfill	-297.4590	-1.2935	47.6280	-0.6244	-59.4123	2.3716
6	0	Backfill to Grade: Backfill	-264.6057	108.8244	47.6663	-115.2744	-59.0760	-111.3960
6	0	Backfill to Grade: Backfill	-255.9140	142.7042	47.5493	-113.3163	-59.1316	-147.0042
6	0	Pave: Pave: Creep	-264.6057	108.7328	47.6683	-114.9539	-58.7821	-91.8044
6	0	Pave: Pave: Shrinkage	-264.6057	108.7328	47.6681	-114.9539	-58.7821	-91.8044
6	0	Pave: Pave: PT	-264.6057	108.7328	47.6681	-114.9539	-58.7821	-91.8044

RESULT : Member Sectional Forces

Member	Station		Result Case	Force X (kips)	Force Y (kips)	Force Z (kips)	Moment X (kips-ft)	Moment Y (kips-ft)	Moment Z (kips-ft)
6	0	Pave: Pave: Other PT	-264.6854	108.7318	47.6681	-114.9541	-58.7821	-91.8045	
6	0	Pave: Pave: step 1	-264.7186	108.7318	52.3636	-114.9541	-65.5238	-91.8045	
6	0	Open Bridge to Traffic:	-264.7187	108.7187	52.3697	-114.8953	-64.5816	-88.3946	
6	0	Open Bridge to Traffic:	-264.7187	108.7187	52.3696	-114.8953	-64.5817	-88.3946	
6	0	Open Bridge to Traffic:	-264.7187	108.7187	52.3696	-114.8953	-64.5817	-88.3946	
6	0	Open Bridge to Traffic:	-264.7020	108.7187	52.3697	-114.8953	-64.5817	-88.3948	
6	0	Open Bridge to Traffic:	-253.9918	151.0684	74.0380	-112.4476	-95.9725	-132.9049	
6	0	Open Bridge to Traffic:	-256.1338	142.5985	69.7044	-112.9371	-89.6943	-124.0029	
6	0	Partial Live Load for	-264.7020	108.7103	52.3723	-114.8562	-64.2197	-86.1307	
6	0	Partial Live Load for	-264.7020	108.7103	52.3722	-114.8562	-64.2197	-86.1307	
6	0	Partial Live Load for	-264.7020	108.7103	52.3722	-114.8562	-64.2197	-86.1307	
6	0	Partial Live Load for	-264.6852	108.7103	52.3722	-114.8561	-64.2197	-86.1308	
6	0	Partial Live Load for	-263.6142	112.9453	54.5391	-114.6114	-67.3588	-90.5819	
6	0	Remove Long Term Live	-263.6161	112.4560	54.8121	-112.6537	-26.9335	27.3241	
6	0	Remove Long Term Live	-263.6161	112.4560	54.8042	-112.6537	-26.9659	27.3241	
6	0	Remove Long Term Live	-263.6161	112.4560	54.8042	-112.6537	-26.9659	27.3241	
6	0	Remove Long Term Live	-250.8798	112.5262	54.8292	-112.6278	-26.9543	27.2290	
6	0	Remove Long Term Live	-251.9508	108.2913	52.6624	-112.8726	-23.8152	31.6800	
6	0	Long Term Performance:	-251.9508	108.3114	52.6559	-112.9037	-24.5815	29.7061	
6	0	Long Term Performance:	-251.9508	108.3114	52.6558	-112.9037	-24.5773	29.7061	
6	0	Long Term Performance:	-251.9508	108.3114	52.6558	-112.9037	-24.5773	29.7061	
6	0	Long Term Performance:	-251.2367	108.3161	52.6570	-112.9022	-24.5766	29.7007	
6	0	Long Term Performance:	-242.6685	142.1959	69.9917	-110.9440	-49.6892	-5.9074	
6	0	Long Term Performance:	-240.5265	150.6658	74.3254	-110.4545	-55.9674	-14.8094	
6	0	Long Term Performance:	-221.0969	152.1997	104.9816	-109.8885	-100.8233	-16.2962	
6	0	Strength Check: Strength	-251.2367	108.3161	52.6570	-112.9022	-24.5768	29.7007	
6	0	Strength Check: Strength	-251.2367	108.3161	52.6570	-112.9022	-24.5768	29.7007	
6	0	Strength Check: Strength	-251.2367	108.3161	52.6570	-112.9022	-24.5768	29.7007	
6	0	Strength Check: Strength	-251.2366	108.3161	52.6570	-112.9022	-24.5768	29.7007	
6	0	Strength Check: Strength	32.4768	109.5575	53.2513	-112.3318	-24.3044	27.3479	
6	0	Strength Check: Strength	-221.0969	152.1997	104.9816	-109.8885	-100.8234	-16.2962	
6	1	Set Precast In Place: Set	0.0000	0.0000	0.0000	0.0000	0.0000	0.0000	
6	1	Set Precast In Place: Set	-0.0175	0.0000	2.4724	0.0000	3.2776	0.0000	
6	1	Tension PT: Tension PT:	-0.0177	0.0000	2.4989	0.0000	7.2295	0.0000	

RESULT : Member Sectional Forces

Member	Station	Result Case	Force X (kips)	Force Y (kips)	Force Z (kips)	Moment X (kips-ft)	Moment Y (kips-ft)	Moment Z (kips-ft)
6	1	Tension PT: Tension PT:	-0.0177	0.0000	2.4983	0.0000	7.2276	0.0000
6	1	Tension PT: Tension PT:	-0.0177	0.0000	2.4983	0.0000	7.2276	0.0000
6	1	Tension PT: Tension PT:	-0.0177	0.0000	2.4983	0.0000	7.2276	0.0000
6	1	Tension PT: Tension PT:	-295.0100	-1.3159	1.8942	-0.6093	5.2957	-3.2857
6	1	Add Superstructure: Add	-295.0100	-1.3024	1.8967	-0.6244	5.5157	-3.2937
6	1	Add Superstructure: Add	-295.0100	-1.3024	1.8966	-0.6244	5.5151	-3.2937
6	1	Add Superstructure: Add	-295.0100	-1.3024	1.8966	-0.6244	5.5151	-3.2937
6	1	Add Superstructure: Add	-294.8403	-1.3021	1.8971	-0.6242	5.5166	-3.2924
6	1	Add Superstructure: Add	-294.8904	-1.3021	8.9681	-0.6242	21.3899	-3.2924
6	1	Backfill to Grade: Backfill	-294.8907	-1.2938	9.0140	-0.6358	30.5671	-3.2974
6	1	Backfill to Grade: Backfill	-294.8907	-1.2938	9.0132	-0.6358	30.5641	-3.2974
6	1	Backfill to Grade: Backfill	-294.8907	-1.2938	9.0132	-0.6358	30.5641	-3.2974
6	1	Backfill to Grade: Backfill	-294.7035	-1.2935	9.0138	-0.6355	30.5658	-3.2964
6	1	Backfill to Grade: Backfill	-261.8502	5.3674	9.0521	-23.0704	31.0236	68.0900
6	1	Backfill to Grade: Backfill	-253.1585	7.6305	8.9351	-21.1122	30.5974	89.7092
6	1	Pave: Pave: Creep	-261.8502	5.2758	9.0541	-22.7499	31.3236	87.3916
6	1	Pave: Pave: Shrinkage	-261.8502	5.2758	9.0539	-22.7499	31.3231	87.3916
6	1	Pave: Pave: PT	-261.8502	5.2758	9.0539	-22.7499	31.3231	87.3916
6	1	Pave: Pave: Other PT	-261.9354	5.2747	9.0538	-22.7500	31.3223	87.3917
6	1	Pave: Pave: step 1	-261.9428	5.2747	10.1014	-22.7500	33.6739	87.3917
6	1	Open Bridge to Traffic:	-261.9429	5.2617	10.1075	-22.6912	34.6355	90.7602
6	1	Open Bridge to Traffic:	-261.9429	5.2617	10.1074	-22.6912	34.6351	90.7602
6	1	Open Bridge to Traffic:	-261.9429	5.2617	10.1074	-22.6912	34.6351	90.7602
6	1	Open Bridge to Traffic:	-261.9266	5.2617	10.1074	-22.6912	34.6352	90.7603
6	1	Open Bridge to Traffic:	-251.0964	8.0906	14.8279	-20.2435	45.0275	117.7844
6	1	Open Bridge to Traffic:	-253.2624	7.5248	13.8838	-20.7331	42.9491	112.3796
6	1	Partial Live Load for	-261.9266	5.2532	10.1101	-22.6521	35.0055	92.9976
6	1	Partial Live Load for	-261.9266	5.2532	10.1100	-22.6521	35.0051	92.9976
6	1	Partial Live Load for	-261.9266	5.2532	10.1100	-22.6521	35.0051	92.9976
6	1	Partial Live Load for	-261.9100	5.2532	10.1100	-22.6521	35.0053	92.9977
6	1	Partial Live Load for	-260.8270	5.5361	10.5821	-22.4073	36.0445	95.7001
6	1	Remove Long Term Live	-260.8290	5.0469	10.8551	-20.4497	77.3345	212.0567
6	1	Remove Long Term Live	-260.8289	5.0469	10.8472	-20.4497	77.2769	212.0567
6	1	Remove Long Term Live	-260.8289	5.0469	10.8472	-20.4497	77.2769	212.0567

RESULT : Member Sectional Forces

Member	Station	Result Case	Force X (kips)	Force Y (kips)	Force Z (kips)	Moment X (kips-ft)	Moment Y (kips-ft)	Moment Z (kips-ft)
6	1	Remove Long Term Live	-248.1224	5.1171	10.8720	-20.4236	77.3639	212.2026
6	1	Remove Long Term Live	-249.2054	4.8342	10.3999	-20.6684	76.3246	209.5002
6	1	Long Term Performance:	-249.2054	4.8544	10.3935	-20.6996	75.5380	207.5902
6	1	Long Term Performance:	-249.2054	4.8544	10.3933	-20.6996	75.5418	207.5902
6	1	Long Term Performance:	-249.2054	4.8544	10.3933	-20.6996	75.5418	207.5902
6	1	Long Term Performance:	-248.4902	4.8591	10.3945	-20.6980	75.5464	207.5989
6	1	Long Term Performance:	-239.8261	7.1222	14.1709	-18.7398	83.8603	229.2181
6	1	Long Term Performance:	-237.6600	7.6880	15.1150	-18.2503	85.9387	234.6230
6	1	Long Term Performance:	-218.0593	9.2219	21.5784	-17.6843	99.8568	237.9937
6	1	Strength Check: Strength	-248.4902	4.8591	10.3946	-20.6980	75.5462	207.5989
6	1	Strength Check: Strength	-248.4902	4.8591	10.3946	-20.6980	75.5462	207.5989
6	1	Strength Check: Strength	-248.4902	4.8591	10.3946	-20.6980	75.5462	207.5989
6	1	Strength Check: Strength	-248.4902	4.8591	10.3946	-20.6980	75.5462	207.5989
6	1	Strength Check: Strength	32.7759	6.1004	10.9715	-20.1166	77.3838	210.7272
6	1	Strength Check: Strength	-218.0593	9.2219	21.5784	-17.6843	99.8566	237.9937
6	2	Set Precast In Place: Set	0.0000	0.0000	0.0000	0.0000	0.0000	0.0000
6	2	Set Precast In Place: Set	0.0816	0.0000	-11.5355	0.0000	-11.0725	0.0000
6	2	Tension PT: Tension PT:	0.0814	0.0000	-11.5090	0.0000	-7.0369	0.0000
6	2	Tension PT: Tension PT:	0.0814	0.0000	-11.5096	0.0000	-7.0405	0.0000
6	2	Tension PT: Tension PT:	0.0814	0.0000	-11.5096	0.0000	-7.0405	0.0000
6	2	Tension PT: Tension PT:	0.0814	0.0000	-11.5096	0.0000	-7.0405	0.0000
6	2	Tension PT: Tension PT:	-292.4054	-1.3159	-12.0959	-0.6205	-10.5048	-9.0396
6	2	Add Superstructure: Add	-292.4054	-1.3024	-12.0934	-0.6357	-10.2769	-9.0050
6	2	Add Superstructure: Add	-292.4054	-1.3024	-12.0936	-0.6357	-10.2780	-9.0050
6	2	Add Superstructure: Add	-292.4054	-1.3024	-12.0936	-0.6357	-10.2780	-9.0050
6	2	Add Superstructure: Add	-292.2406	-1.3021	-12.0931	-0.6354	-10.2756	-8.9994
6	2	Add Superstructure: Add	-292.1164	-1.3021	-29.6460	-0.6354	-10.9991	-8.9994
6	2	Backfill to Grade: Backfill	-292.1168	-1.2938	-29.6001	-0.6470	-1.6765	-8.9782
6	2	Backfill to Grade: Backfill	-292.1168	-1.2938	-29.6009	-0.6470	-1.6820	-8.9782
6	2	Backfill to Grade: Backfill	-292.1168	-1.2938	-29.6009	-0.6470	-1.6820	-8.9782
6	2	Backfill to Grade: Backfill	-291.9364	-1.2935	-29.6003	-0.6467	-1.6795	-8.9718
6	2	Backfill to Grade: Backfill	-259.0831	-99.0397	-29.5620	69.1336	-1.1002	-81.5561
6	2	Backfill to Grade: Backfill	-250.3914	-128.3932	-29.6790	71.0917	-1.8970	-102.8308
6	2	Pave: Pave: Creep	-259.0832	-99.1313	-29.5601	69.4541	-0.7941	-62.5445

RESULT : Member Sectional Forces

Member	Station		Result Case	Force X (kips)	Force Y (kips)	Force Z (kips)	Moment X (kips-ft)	Moment Y (kips-ft)	Moment Z (kips-ft)
6	2	Pave: Pave: Shrinkage	-259.0832	-99.1313	-29.5602	69.4541	-0.7950	-62.5445	
6	2	Pave: Pave: PT	-259.0832	-99.1313	-29.5602	69.4541	-0.7950	-62.5445	
6	2	Pave: Pave: Other PT	-259.1685	-99.1323	-29.5603	69.4539	-0.7962	-62.5476	
6	2	Pave: Pave: step 1	-259.1501	-99.1323	-32.1607	69.4539	-0.9033	-62.5476	
6	2	Open Bridge to Traffic:	-259.1501	-99.1454	-32.1546	69.5127	0.0776	-59.2205	
6	2	Open Bridge to Traffic:	-259.1501	-99.1454	-32.1547	69.5127	0.0768	-59.2205	
6	2	Open Bridge to Traffic:	-259.1501	-99.1454	-32.1547	69.5127	0.0768	-59.2205	
6	2	Open Bridge to Traffic:	-259.1345	-99.1454	-32.1547	69.5128	0.0770	-59.2200	
6	2	Open Bridge to Traffic:	-248.1844	-135.8372	-44.3821	71.9604	-1.4169	-85.8133	
6	2	Open Bridge to Traffic:	-250.3745	-128.4989	-41.9366	71.4709	-1.1181	-80.4947	
6	2	Partial Live Load for	-259.1346	-99.1538	-32.1520	69.5519	0.4557	-57.0095	
6	2	Partial Live Load for	-259.1346	-99.1538	-32.1521	69.5519	0.4550	-57.0095	
6	2	Partial Live Load for	-259.1346	-99.1538	-32.1521	69.5519	0.4550	-57.0095	
6	2	Partial Live Load for	-259.1187	-99.1538	-32.1521	69.5519	0.4552	-57.0089	
6	2	Partial Live Load for	-258.0236	-102.8230	-33.3748	69.7967	0.3058	-59.6683	
6	2	Remove Long Term Live	-258.0256	-103.3123	-33.1018	71.7543	42.4604	55.1389	
6	2	Remove Long Term Live	-258.0255	-103.3123	-33.1097	71.7543	42.3777	55.1389	
6	2	Remove Long Term Live	-258.0255	-103.3123	-33.1097	71.7543	42.3777	55.1389	
6	2	Remove Long Term Live	-245.3852	-103.2420	-33.0854	71.7806	42.5332	55.5486	
6	2	Remove Long Term Live	-246.4802	-99.5729	-31.8627	71.5359	42.6826	58.2080	
6	2	Long Term Performance:	-246.4801	-99.5527	-31.8691	71.5047	41.8755	56.3619	
6	2	Long Term Performance:	-246.4801	-99.5527	-31.8692	71.5047	41.8789	56.3619	
6	2	Long Term Performance:	-246.4801	-99.5527	-31.8692	71.5047	41.8789	56.3619	
6	2	Long Term Performance:	-245.7642	-99.5480	-31.8680	71.5063	41.8874	56.3849	
6	2	Long Term Performance:	-237.0041	-128.9015	-41.6500	73.4644	40.6923	35.1102	
6	2	Long Term Performance:	-234.8141	-136.2399	-44.0955	73.9540	40.3935	29.7915	
6	2	Long Term Performance:	-215.0422	-134.7059	-61.8250	74.5199	36.4732	38.0198	
6	2	Strength Check: Strength	-245.7642	-99.5480	-31.8680	71.5063	41.8873	56.3849	
6	2	Strength Check: Strength	-245.7642	-99.5480	-31.8680	71.5063	41.8873	56.3849	
6	2	Strength Check: Strength	-245.7642	-99.5480	-31.8680	71.5063	41.8873	56.3849	
6	2	Strength Check: Strength	-245.7641	-99.5480	-31.8680	71.5063	41.8873	56.3849	
6	2	Strength Check: Strength	33.0751	-98.3066	-31.3082	72.0985	45.1834	64.9819	
6	2	Strength Check: Strength	-215.0421	-134.7059	-61.8250	74.5199	36.4730	38.0198	
7	0	Set Precast In Place: Set	0.0000	0.0000	0.0000	0.0000	0.0000	0.0000	

RESULT : Member Sectional Forces

Member	Station	Result Case	Force X (kips)	Force Y (kips)	Force Z (kips)	Moment X (kips-ft)	Moment Y (kips-ft)	Moment Z (kips-ft)
7	0	Set Precast In Place: Set	0.0816	0.0000	-11.5355	0.0000	-11.0725	0.0000
7	0	Tension PT: Tension PT:	0.0814	0.0000	-11.5090	0.0000	-7.0369	0.0000
7	0	Tension PT: Tension PT:	0.0814	0.0000	-11.5096	0.0000	-7.0405	0.0000
7	0	Tension PT: Tension PT:	0.0814	0.0000	-11.5096	0.0000	-7.0405	0.0000
7	0	Tension PT: Tension PT:	0.0814	0.0000	-11.5096	0.0000	-7.0405	0.0000
7	0	Tension PT: Tension PT:	-292.4054	-13.5915	-12.0959	1.6510	-10.5048	-9.0557
7	0	Add Superstructure: Add	-292.4054	-13.6263	-12.0934	1.6448	-10.2769	-9.0211
7	0	Add Superstructure: Add	-292.4054	-13.6263	-12.0936	1.6448	-10.2780	-9.0211
7	0	Add Superstructure: Add	-292.4054	-13.6263	-12.0936	1.6448	-10.2780	-9.0211
7	0	Add Superstructure: Add	-292.2406	-13.6213	-12.0931	1.6442	-10.2756	-9.0156
7	0	Add Superstructure: Add	-292.1164	-13.6213	-29.6460	1.6442	-10.9991	-9.0156
7	0	Backfill to Grade: Backfill	-292.1168	-13.6428	-29.6001	1.6381	-1.6765	-8.9943
7	0	Backfill to Grade: Backfill	-292.1168	-13.6428	-29.6009	1.6381	-1.6820	-8.9943
7	0	Backfill to Grade: Backfill	-292.1168	-13.6428	-29.6009	1.6381	-1.6820	-8.9943
7	0	Backfill to Grade: Backfill	-291.9364	-13.6374	-29.6003	1.6375	-1.6795	-8.9880
7	0	Backfill to Grade: Backfill	-259.0831	40.7710	-29.5620	43.2627	-1.1002	-81.3731
7	0	Backfill to Grade: Backfill	-250.3914	55.7016	-29.6790	37.0263	-1.8970	-102.5898
7	0	Pave: Pave: Creep	-259.0832	46.7915	-29.5601	42.4522	-0.7941	-62.3534
7	0	Pave: Pave: Shrinkage	-259.0832	46.7915	-29.5602	42.4522	-0.7950	-62.3534
7	0	Pave: Pave: PT	-259.0832	46.7915	-29.5602	42.4522	-0.7950	-62.3534
7	0	Pave: Pave: Other PT	-259.1685	46.7876	-29.5603	42.4525	-0.7962	-62.3565
7	0	Pave: Pave: step 1	-259.1501	46.7876	-32.1607	42.4525	-0.9033	-62.3565
7	0	Open Bridge to Traffic:	-259.1501	47.8553	-32.1546	42.3113	0.0776	-59.0280
7	0	Open Bridge to Traffic:	-259.1501	47.8553	-32.1547	42.3113	0.0768	-59.0280
7	0	Open Bridge to Traffic:	-259.1501	47.8553	-32.1547	42.3113	0.0768	-59.0280
7	0	Open Bridge to Traffic:	-259.1345	47.8557	-32.1547	42.3113	0.0770	-59.0275
7	0	Open Bridge to Traffic:	-248.1844	66.5190	-44.3821	34.5159	-1.4169	-85.5484
7	0	Open Bridge to Traffic:	-250.3745	62.7864	-41.9366	36.0750	-1.1181	-80.2442
7	0	Partial Live Load for	-259.1346	48.5653	-32.1520	42.2175	0.4557	-56.8161
7	0	Partial Live Load for	-259.1346	48.5653	-32.1521	42.2175	0.4550	-56.8161
7	0	Partial Live Load for	-259.1346	48.5653	-32.1521	42.2175	0.4550	-56.8161
7	0	Partial Live Load for	-259.1187	48.5658	-32.1521	42.2175	0.4552	-56.8155
7	0	Partial Live Load for	-258.0236	50.4321	-33.3748	41.4379	0.3058	-59.4676
7	0	Remove Long Term Live	-258.0256	87.2158	-33.1018	36.4985	42.4604	55.3884

RESULT : Member Sectional Forces

Member	Station	Result Case	Force X (kips)	Force Y (kips)	Force Z (kips)	Moment X (kips-ft)	Moment Y (kips-ft)	Moment Z (kips-ft)
7	0	Remove Long Term Live	-258.0255	87.2158	-33.1097	36.4985	42.3777	55.3884
7	0	Remove Long Term Live	-258.0255	87.2158	-33.1097	36.4985	42.3777	55.3884
7	0	Remove Long Term Live	-245.3852	87.8068	-33.0854	36.4285	42.5332	55.7988
7	0	Remove Long Term Live	-246.4802	85.9405	-31.8627	37.2080	42.6826	58.4509
7	0	Long Term Performance:	-246.4801	85.2946	-31.8691	37.3001	41.8755	56.6040
7	0	Long Term Performance:	-246.4801	85.2946	-31.8692	37.3001	41.8789	56.6040
7	0	Long Term Performance:	-246.4801	85.2946	-31.8692	37.3001	41.8789	56.6040
7	0	Long Term Performance:	-245.7642	85.3306	-31.8680	37.2959	41.8874	56.6270
7	0	Long Term Performance:	-237.0041	100.2612	-41.6500	31.0596	40.6923	35.4103
7	0	Long Term Performance:	-234.8141	103.9939	-44.0955	29.5005	40.3935	30.1061
7	0	Long Term Performance:	-215.0422	116.8313	-61.8250	27.9748	36.4732	38.3492
7	0	Strength Check: Strength	-245.7642	85.3306	-31.8680	37.2959	41.8873	56.6270
7	0	Strength Check: Strength	-245.7642	85.3306	-31.8680	37.2959	41.8873	56.6270
7	0	Strength Check: Strength	-245.7642	85.3306	-31.8680	37.2959	41.8873	56.6270
7	0	Strength Check: Strength	-245.7641	85.3306	-31.8680	37.2959	41.8873	56.6270
7	0	Strength Check: Strength	33.0751	98.2877	-31.3082	35.7202	45.1834	65.2393
7	0	Strength Check: Strength	-215.0421	116.8313	-61.8250	27.9748	36.4730	38.3492
7	1	Set Precast In Place: Set	0.0000	0.0000	0.0000	0.0000	0.0000	0.0000
7	1	Set Precast In Place: Set	0.1131	0.0000	-15.9899	0.0000	-24.8355	0.0000
7	1	Tension PT: Tension PT:	0.1130	0.0000	-15.9635	0.0000	-20.7735	0.0000
7	1	Tension PT: Tension PT:	0.1130	0.0000	-15.9640	0.0000	-20.7776	0.0000
7	1	Tension PT: Tension PT:	0.1130	0.0000	-15.9640	0.0000	-20.7776	0.0000
7	1	Tension PT: Tension PT:	0.1130	0.0000	-15.9640	0.0000	-20.7776	0.0000
7	1	Tension PT: Tension PT:	-291.7444	-13.5915	-16.5459	1.6481	-24.7283	-23.0461
7	1	Add Superstructure: Add	-291.7444	-13.6263	-16.5434	1.6420	-24.4979	-23.0465
7	1	Add Superstructure: Add	-291.7444	-13.6263	-16.5435	1.6420	-24.4991	-23.0465
7	1	Add Superstructure: Add	-291.7444	-13.6263	-16.5435	1.6420	-24.4991	-23.0465
7	1	Add Superstructure: Add	-291.5846	-13.6213	-16.5431	1.6414	-24.4970	-23.0328
7	1	Add Superstructure: Add	-291.4054	-13.6213	-41.8720	1.6414	-46.6620	-23.0328
7	1	Backfill to Grade: Backfill	-291.4057	-13.6428	-41.8261	1.6353	-37.2934	-23.0330
7	1	Backfill to Grade: Backfill	-291.4057	-13.6428	-41.8269	1.6353	-37.2998	-23.0330
7	1	Backfill to Grade: Backfill	-291.4057	-13.6428	-41.8269	1.6353	-37.2998	-23.0330
7	1	Backfill to Grade: Backfill	-291.2323	-13.6374	-41.8264	1.6347	-37.2977	-23.0170
7	1	Backfill to Grade: Backfill	-258.3790	7.5001	-41.7880	73.4806	-36.6801	-57.6032

RESULT : Member Sectional Forces

Member	Station		Result Case	Force X (kips)		Force Y (kips)		Force Z (kips)	Moment X (kips-ft)	Moment Y (kips-ft)	Moment Z (kips-ft)
7	1	Backfill to Grade: Backfill	-249.6873	12.4225	-41.9051	67.2443	-37.5939	-68.8892			
7	1	Pave: Pave: Creep	-258.3790	13.5207	-41.7861	72.6701	-36.3722	-32.5628			
7	1	Pave: Pave: Shrinkage	-258.3790	13.5207	-41.7862	72.6701	-36.3731	-32.5628			
7	1	Pave: Pave: PT	-258.3790	13.5207	-41.7862	72.6701	-36.3731	-32.5628			
7	1	Pave: Pave: Other PT	-258.4645	13.5168	-41.7863	72.6705	-36.3744	-32.5697			
7	1	Pave: Pave: step 1	-258.4379	13.5168	-45.5388	72.6705	-39.6581	-32.5697			
7	1	Open Bridge to Traffic:	-258.4380	14.5845	-45.5327	72.5293	-38.6711	-28.1735			
7	1	Open Bridge to Traffic:	-258.4380	14.5845	-45.5328	72.5293	-38.6720	-28.1735			
7	1	Open Bridge to Traffic:	-258.4380	14.5845	-45.5328	72.5293	-38.6720	-28.1735			
7	1	Open Bridge to Traffic:	-258.4231	14.5849	-45.5327	72.5293	-38.6718	-28.1721			
7	1	Open Bridge to Traffic:	-247.4351	20.7379	-63.1122	64.7339	-55.0696	-42.2796			
7	1	Open Bridge to Traffic:	-249.6327	19.5073	-59.5963	66.2930	-51.7900	-39.4581			
7	1	Partial Live Load for	-258.4231	15.2945	-45.5301	72.4355	-38.2905	-25.2511			
7	1	Partial Live Load for	-258.4231	15.2945	-45.5302	72.4355	-38.2913	-25.2511			
7	1	Partial Live Load for	-258.4231	15.2945	-45.5302	72.4355	-38.2913	-25.2511			
7	1	Partial Live Load for	-258.4078	15.2950	-45.5301	72.4355	-38.2912	-25.2497			
7	1	Partial Live Load for	-257.3090	15.9103	-47.2881	71.6559	-39.9309	-26.6604			
7	1	Remove Long Term Live	-257.3109	52.6939	-47.0150	66.7165	2.4968	124.9801			
7	1	Remove Long Term Live	-257.3109	52.6939	-47.0230	66.7165	2.4061	124.9801			
7	1	Remove Long Term Live	-257.3109	52.6939	-47.0230	66.7165	2.4061	124.9801			
7	1	Remove Long Term Live	-244.7367	53.2849	-46.9991	66.6467	2.5754	126.0229			
7	1	Remove Long Term Live	-245.8355	52.6696	-45.2412	67.4263	4.2152	127.4336			
7	1	Long Term Performance:	-245.8355	52.0238	-45.2476	67.5184	3.4017	124.9409			
7	1	Long Term Performance:	-245.8355	52.0238	-45.2477	67.5184	3.4049	124.9409			
7	1	Long Term Performance:	-245.8355	52.0238	-45.2477	67.5184	3.4049	124.9409			
7	1	Long Term Performance:	-245.1187	52.0598	-45.2465	67.5142	3.4148	124.9994			
7	1	Long Term Performance:	-236.3283	56.9821	-59.3101	61.2778	-9.7034	113.7134			
7	1	Long Term Performance:	-234.1307	58.2127	-62.8260	59.7188	-12.9830	110.8919			
7	1	Long Term Performance:	-214.3047	71.0502	-88.2031	58.1931	-38.4571	131.9728			
7	1	Strength Check: Strength	-245.1187	52.0598	-45.2465	67.5142	3.4147	124.9994			
7	1	Strength Check: Strength	-245.1187	52.0598	-45.2465	67.5142	3.4147	124.9994			
7	1	Strength Check: Strength	-245.1187	52.0598	-45.2465	67.5142	3.4147	124.9994			
7	1	Strength Check: Strength	-245.1186	52.0598	-45.2465	67.5142	3.4147	124.9994			
7	1	Strength Check: Strength	33.1698	65.0168	-44.6906	65.9409	7.1830	146.9186			

RESULT : Member Sectional Forces

Member	Station	Result Case	Force X (kips)	Force Y (kips)	Force Z (kips)	Moment X (kips-ft)	Moment Y (kips-ft)	Moment Z (kips-ft)
7	1	Strength Check: Strength	-214.3046	71.0502	-88.2031	58.1931	-38.4572	131.9728
7	2	Set Precast In Place: Set	0.0000	0.0000	0.0000	0.0000	0.0000	0.0000
7	2	Set Precast In Place: Set	0.1447	0.0000	-20.4443	0.0000	-43.0530	0.0000
7	2	Tension PT: Tension PT:	0.1445	0.0000	-20.4179	0.0000	-38.9647	0.0000
7	2	Tension PT: Tension PT:	0.1445	0.0000	-20.4184	0.0000	-38.9693	0.0000
7	2	Tension PT: Tension PT:	0.1445	0.0000	-20.4184	0.0000	-38.9693	0.0000
7	2	Tension PT: Tension PT:	0.1445	0.0000	-20.4184	0.0000	-38.9693	0.0000
7	2	Tension PT: Tension PT:	-291.0822	-13.5915	-20.9958	1.6453	-43.3971	-37.0374
7	2	Add Superstructure: Add	-291.0822	-13.6263	-20.9933	1.6391	-43.1642	-37.0726
7	2	Add Superstructure: Add	-291.0822	-13.6263	-20.9935	1.6391	-43.1656	-37.0726
7	2	Add Superstructure: Add	-291.0822	-13.6263	-20.9935	1.6391	-43.1656	-37.0726
7	2	Add Superstructure: Add	-290.9242	-13.6213	-20.9931	1.6386	-43.1634	-37.0528
7	2	Add Superstructure: Add	-290.6899	-13.6213	-54.0980	1.6386	-94.5460	-37.0528
7	2	Backfill to Grade: Backfill	-290.6902	-13.6428	-54.0520	1.6325	-85.1314	-37.0745
7	2	Backfill to Grade: Backfill	-290.6902	-13.6428	-54.0529	1.6325	-85.1387	-37.0745
7	2	Backfill to Grade: Backfill	-290.6902	-13.6428	-54.0529	1.6325	-85.1387	-37.0745
7	2	Backfill to Grade: Backfill	-290.5180	-13.6374	-54.0524	1.6319	-85.1363	-37.0524
7	2	Backfill to Grade: Backfill	-257.6647	-26.0707	-54.0140	103.6986	-84.4803	-67.2613
7	2	Backfill to Grade: Backfill	-248.9730	-31.2046	-54.1310	97.4623	-85.5112	-78.6491
7	2	Pave: Pave: Creep	-257.6647	-20.0502	-54.0121	102.8881	-84.1705	-36.2003
7	2	Pave: Pave: Shrinkage	-257.6647	-20.0502	-54.0122	102.8881	-84.1715	-36.2003
7	2	Pave: Pave: PT	-257.6647	-20.0502	-54.0122	102.8881	-84.1715	-36.2003
7	2	Pave: Pave: Other PT	-257.7498	-20.0540	-54.0123	102.8885	-84.1729	-36.2113
7	2	Pave: Pave: step 1	-257.7151	-20.0540	-58.9167	102.8885	-91.7851	-36.2113
7	2	Open Bridge to Traffic:	-257.7151	-18.9864	-58.9106	102.7473	-90.7920	-30.7474
7	2	Open Bridge to Traffic:	-257.7151	-18.9864	-58.9107	102.7473	-90.7929	-30.7474
7	2	Open Bridge to Traffic:	-257.7151	-18.9864	-58.9107	102.7473	-90.7929	-30.7474
7	2	Open Bridge to Traffic:	-257.7003	-18.9859	-58.9107	102.7472	-90.7928	-30.7455
7	2	Open Bridge to Traffic:	-246.6744	-25.4033	-81.8421	94.9518	-127.4465	-44.9802
7	2	Open Bridge to Traffic:	-248.8796	-24.1198	-77.2559	96.5109	-120.1158	-42.1333
7	2	Partial Live Load for	-257.7003	-18.2763	-58.9081	102.6535	-90.4088	-27.1149
7	2	Partial Live Load for	-257.7003	-18.2763	-58.9082	102.6535	-90.4098	-27.1149
7	2	Partial Live Load for	-257.7003	-18.2763	-58.9082	102.6535	-90.4098	-27.1149
7	2	Partial Live Load for	-257.6851	-18.2759	-58.9081	102.6534	-90.4096	-27.1129

RESULT : Member Sectional Forces

Member	Station	Result Case	Force X (kips)	Force Y (kips)	Force Z (kips)	Moment X (kips-ft)	Moment Y (kips-ft)	Moment Z (kips-ft)
7	2	Partial Live Load for	-256.5826	-18.9176	-61.2013	101.8739	-94.0749	-28.5364
7	2	Remove Long Term Live	-256.5845	17.8660	-60.9282	96.9344	-51.3741	159.8887
7	2	Remove Long Term Live	-256.5844	17.8660	-60.9362	96.9344	-51.4728	159.8887
7	2	Remove Long Term Live	-256.5844	17.8660	-60.9362	96.9344	-51.4728	159.8887
7	2	Remove Long Term Live	-244.0235	18.4571	-60.9124	96.8647	-51.2818	161.5308
7	2	Remove Long Term Live	-245.1261	19.0988	-58.6192	97.6443	-47.6165	162.9543
7	2	Long Term Performance:	-245.1261	18.4530	-58.6257	97.7364	-48.4364	159.8157
7	2	Long Term Performance:	-245.1261	18.4530	-58.6258	97.7364	-48.4333	159.8157
7	2	Long Term Performance:	-245.1261	18.4530	-58.6258	97.7364	-48.4333	159.8157
7	2	Long Term Performance:	-244.4090	18.4889	-58.6246	97.7321	-48.4221	159.9100
7	2	Long Term Performance:	-235.5883	13.3550	-76.9698	91.4958	-77.7451	148.5222
7	2	Long Term Performance:	-233.3832	12.0716	-81.5561	89.9368	-85.0759	145.6753
7	2	Long Term Performance:	-213.5031	24.9090	-114.5807	88.4111	-139.7516	179.5939
7	2	Strength Check: Strength	-244.4090	18.4889	-58.6246	97.7322	-48.4223	159.9100
7	2	Strength Check: Strength	-244.4090	18.4889	-58.6246	97.7322	-48.4223	159.9100
7	2	Strength Check: Strength	-244.4090	18.4889	-58.6246	97.7322	-48.4223	159.9100
7	2	Strength Check: Strength	-244.4089	18.4889	-58.6246	97.7322	-48.4223	159.9100
7	2	Strength Check: Strength	33.2645	31.4460	-58.0730	96.1617	-44.2001	195.1762
7	2	Strength Check: Strength	-213.5030	24.9090	-114.5807	88.4111	-139.7518	179.5940
8	0	Set Precast In Place: Set	0.0000	0.0000	0.0000	0.0000	0.0000	0.0000
8	0	Set Precast In Place: Set	0.0657	0.0000	-9.2845	0.0000	-43.0530	0.0000
8	0	Tension PT: Tension PT:	0.0692	0.0000	-9.7751	0.0000	-38.9647	0.0000
8	0	Tension PT: Tension PT:	0.0692	0.0000	-9.7745	0.0000	-38.9693	0.0000
8	0	Tension PT: Tension PT:	0.0692	0.0000	-9.7745	0.0000	-38.9693	0.0000
8	0	Tension PT: Tension PT:	0.0692	0.0000	-9.7745	0.0000	-38.9693	0.0000
8	0	Tension PT: Tension PT:	-291.1098	26.2605	-17.1003	0.6437	-43.3971	-37.0303
8	0	Add Superstructure: Add	-291.1096	26.2647	-17.1283	0.7561	-43.1642	-37.0663
8	0	Add Superstructure: Add	-291.1096	26.2647	-17.1281	0.7561	-43.1656	-37.0663
8	0	Add Superstructure: Add	-291.1096	26.2647	-17.1281	0.7561	-43.1656	-37.0663
8	0	Add Superstructure: Add	-290.9515	26.2505	-17.1241	0.7558	-43.1634	-37.0465
8	0	Add Superstructure: Add	-291.1090	26.2505	5.1305	0.7558	-94.5460	-37.0465
8	0	Backfill to Grade: Backfill	-291.1010	26.2531	4.0008	0.8445	-85.1314	-37.0689
8	0	Backfill to Grade: Backfill	-291.1010	26.2531	4.0017	0.8445	-85.1387	-37.0689
8	0	Backfill to Grade: Backfill	-291.1010	26.2531	4.0017	0.8445	-85.1387	-37.0689

RESULT : Member Sectional Forces

Member	Station	Result Case	Force X (kips)	Force Y (kips)	Force Z (kips)	Moment X (kips-ft)	Moment Y (kips-ft)	Moment Z (kips-ft)
8	0	Backfill to Grade: Backfill	-290.9288	26.2375	4.0060	0.8441	-85.1363	-37.0468
8	0	Backfill to Grade: Backfill	-258.0826	85.1211	5.0392	-130.8461	-84.4803	-65.6017
8	0	Backfill to Grade: Backfill	-249.3798	104.2618	3.3551	-131.2814	-85.5112	-77.0305
8	0	Pave: Pave: Creep	-258.0823	81.3946	5.0021	-131.2746	-84.1705	-34.5434
8	0	Pave: Pave: Shrinkage	-258.0823	81.3946	5.0022	-131.2746	-84.1715	-34.5434
8	0	Pave: Pave: PT	-258.0823	81.3946	5.0022	-131.2746	-84.1715	-34.5434
8	0	Pave: Pave: Other PT	-258.1673	81.4022	5.0001	-131.2744	-84.1729	-34.5544
8	0	Pave: Pave: step 1	-258.1906	81.4022	8.2970	-131.2744	-91.7851	-34.5544
8	0	Open Bridge to Traffic:	-258.1898	80.7467	8.1779	-131.3677	-90.7920	-29.0909
8	0	Open Bridge to Traffic:	-258.1898	80.7467	8.1780	-131.3677	-90.7929	-29.0909
8	0	Open Bridge to Traffic:	-258.1898	80.7467	8.1780	-131.3677	-90.7929	-29.0909
8	0	Open Bridge to Traffic:	-258.1750	80.7454	8.1784	-131.3677	-90.7928	-29.0890
8	0	Open Bridge to Traffic:	-247.4049	104.6712	21.3905	-131.9118	-127.4465	-43.3750
8	0	Open Bridge to Traffic:	-249.5589	99.8860	18.7481	-131.8030	-120.1158	-40.5178
8	0	Partial Live Load for	-258.1747	80.3098	8.1323	-131.4302	-90.4088	-25.4586
8	0	Partial Live Load for	-258.1747	80.3098	8.1324	-131.4302	-90.4098	-25.4586
8	0	Partial Live Load for	-258.1747	80.3098	8.1324	-131.4302	-90.4098	-25.4586
8	0	Partial Live Load for	-258.1595	80.3084	8.1328	-131.4303	-90.4096	-25.4566
8	0	Partial Live Load for	-257.0825	82.7010	9.4540	-131.4847	-94.0749	-26.8852
8	0	Remove Long Term Live	-257.0462	60.0947	4.3300	-134.1013	-51.3741	161.5234
8	0	Remove Long Term Live	-257.0463	60.0947	4.3418	-134.1013	-51.4728	161.5234
8	0	Remove Long Term Live	-257.0463	60.0947	4.3418	-134.1013	-51.4728	161.5234
8	0	Remove Long Term Live	-244.4875	58.9556	4.6578	-134.1291	-51.2818	163.1653
8	0	Remove Long Term Live	-245.5645	56.5630	3.3366	-134.0747	-47.6165	164.5939
8	0	Long Term Performance:	-245.5652	56.9396	3.4350	-134.0600	-48.4364	161.4559
8	0	Long Term Performance:	-245.5652	56.9396	3.4346	-134.0600	-48.4333	161.4559
8	0	Long Term Performance:	-245.5652	56.9396	3.4346	-134.0600	-48.4333	161.4559
8	0	Long Term Performance:	-244.8483	56.8745	3.4526	-134.0616	-48.4221	161.5501
8	0	Long Term Performance:	-236.2322	76.0152	14.0223	-134.4969	-77.7451	150.1213
8	0	Long Term Performance:	-234.0782	80.8003	16.6647	-134.6057	-85.0759	147.2641
8	0	Long Term Performance:	-214.5390	57.3402	31.8265	-135.1772	-139.7516	181.1760
8	0	Strength Check: Strength	-244.8483	56.8745	3.4526	-134.0617	-48.4223	161.5501
8	0	Strength Check: Strength	-244.8483	56.8745	3.4526	-134.0617	-48.4223	161.5501
8	0	Strength Check: Strength	-244.8483	56.8745	3.4526	-134.0617	-48.4223	161.5501

RESULT : Member Sectional Forces

Member	Station	Result Case	Force X (kips)	Force Y (kips)	Force Z (kips)	Moment X (kips-ft)	Moment Y (kips-ft)	Moment Z (kips-ft)
8	0	Strength Check: Strength	-244.8482	56.8745	3.4526	-134.0617	-48.4223	161.5501
8	0	Strength Check: Strength	32.7797	31.8430	10.4375	-134.6755	-44.2001	196.8096
8	0	Strength Check: Strength	-214.5389	57.3402	31.8265	-135.1773	-139.7518	181.1760
8	1	Set Precast In Place: Set	0.0000	0.0000	0.0000	0.0000	0.0000	0.0000
8	1	Set Precast In Place: Set	0.1982	0.0000	-28.0049	0.0000	-120.7408	0.0000
8	1	Tension PT: Tension PT:	0.2016	0.0000	-28.4955	0.0000	-118.6967	0.0000
8	1	Tension PT: Tension PT:	0.2016	0.0000	-28.4949	0.0000	-118.6990	0.0000
8	1	Tension PT: Tension PT:	0.2016	0.0000	-28.4949	0.0000	-118.6990	0.0000
8	1	Tension PT: Tension PT:	0.2016	0.0000	-28.4949	0.0000	-118.6990	0.0000
8	1	Tension PT: Tension PT:	-287.3247	26.2605	-35.7949	0.6253	-152.9377	69.7806
8	1	Add Superstructure: Add	-287.3245	26.2647	-35.8228	0.7376	-152.8212	69.7622
8	1	Add Superstructure: Add	-287.3245	26.2647	-35.8227	0.7376	-152.8219	69.7622
8	1	Add Superstructure: Add	-287.3245	26.2647	-35.8227	0.7376	-152.8219	69.7622
8	1	Add Superstructure: Add	-287.1682	26.2505	-35.8187	0.7373	-152.8034	69.7238
8	1	Add Superstructure: Add	-287.0964	26.2505	-45.9639	0.7373	-178.9575	69.7238
8	1	Backfill to Grade: Backfill	-287.0884	26.2531	-47.0936	0.8260	-174.2502	69.7123
8	1	Backfill to Grade: Backfill	-287.0884	26.2531	-47.0928	0.8260	-174.2538	69.7123
8	1	Backfill to Grade: Backfill	-287.0884	26.2531	-47.0928	0.8260	-174.2538	69.7123
8	1	Backfill to Grade: Backfill	-286.9174	26.2375	-47.0884	0.8256	-174.2335	69.6703
8	1	Backfill to Grade: Backfill	-254.0712	-55.7569	-46.0552	-0.7368	-169.2724	-6.7726
8	1	Backfill to Grade: Backfill	-245.3684	-78.7171	-47.7393	-1.1721	-177.3205	-26.0896
8	1	Pave: Pave: Creep	-254.0709	-59.4834	-46.0924	-1.1653	-169.1175	8.7580
8	1	Pave: Pave: Shrinkage	-254.0709	-59.4834	-46.0923	-1.1653	-169.1180	8.7580
8	1	Pave: Pave: PT	-254.0709	-59.4834	-46.0923	-1.1653	-169.1180	8.7580
8	1	Pave: Pave: Other PT	-254.1555	-59.4757	-46.0944	-1.1651	-169.1282	8.7788
8	1	Pave: Pave: step 1	-254.1449	-59.4757	-47.5974	-1.1651	-173.0029	8.7788
8	1	Open Bridge to Traffic:	-254.1441	-60.1312	-47.7166	-1.2584	-172.5063	11.5109
8	1	Open Bridge to Traffic:	-254.1441	-60.1312	-47.7165	-1.2584	-172.5068	11.5109
8	1	Open Bridge to Traffic:	-254.1441	-60.1312	-47.7165	-1.2584	-172.5068	11.5109
8	1	Open Bridge to Traffic:	-254.1293	-60.1326	-47.7161	-1.2585	-172.5050	11.5073
8	1	Open Bridge to Traffic:	-243.2014	-88.8329	-56.8039	-1.8026	-200.5663	-12.6388
8	1	Open Bridge to Traffic:	-245.3870	-83.0928	-54.9863	-1.6938	-194.9540	-7.8096
8	1	Partial Live Load for	-254.1290	-60.5682	-47.7622	-1.3209	-172.3131	13.3227
8	1	Partial Live Load for	-254.1290	-60.5682	-47.7620	-1.3209	-172.3136	13.3227

RESULT : Member Sectional Forces

Member	Station		Result Case	Force X (kips)		Force Y (kips)		Force Z (kips)	Moment X (kips-ft)	Moment Y (kips-ft)	Moment Z (kips-ft)
8	1	Partial Live Load for	-254.1290	-60.5682	-47.7620	-1.3209	-172.3136	13.3227			
8	1	Partial Live Load for	-254.1139	-60.5695	-47.7617	-1.3210	-172.3118	13.3190			
8	1	Partial Live Load for	-253.0211	-63.4396	-48.6704	-1.3754	-175.1179	10.9044			
8	1	Remove Long Term Live	-252.9849	-86.0459	-53.7944	-3.9920	-153.7675	105.1180			
8	1	Remove Long Term Live	-252.9849	-86.0459	-53.7826	-3.9920	-153.8168	105.1180			
8	1	Remove Long Term Live	-252.9849	-86.0459	-53.7826	-3.9920	-153.8168	105.1180			
8	1	Remove Long Term Live	-240.4394	-87.1850	-53.4667	-4.0197	-152.3119	102.0220			
8	1	Remove Long Term Live	-241.5322	-84.3149	-52.5579	-3.9653	-149.5058	104.4366			
8	1	Long Term Performance:	-241.5329	-83.9384	-52.4596	-3.9507	-149.9157	102.8676			
8	1	Long Term Performance:	-241.5329	-83.9384	-52.4599	-3.9507	-149.9142	102.8676			
8	1	Long Term Performance:	-241.5329	-83.9384	-52.4599	-3.9507	-149.9142	102.8676			
8	1	Long Term Performance:	-240.8157	-84.0035	-52.4419	-3.9523	-149.8280	102.6905			
8	1	Long Term Performance:	-232.0734	-106.9637	-59.7121	-4.3876	-172.2770	83.3735			
8	1	Long Term Performance:	-229.8878	-112.7037	-61.5297	-4.4964	-177.8892	78.5443			
8	1	Long Term Performance:	-210.1229	-136.1639	-78.2730	-5.0679	-235.8598	14.7036			
8	1	Strength Check: Strength	-240.8157	-84.0035	-52.4419	-3.9523	-149.8280	102.6904			
8	1	Strength Check: Strength	-240.8157	-84.0035	-52.4419	-3.9523	-149.8280	102.6904			
8	1	Strength Check: Strength	-240.8157	-84.0035	-52.4419	-3.9523	-149.8280	102.6904			
8	1	Strength Check: Strength	-240.8156	-84.0035	-52.4419	-3.9523	-149.8280	102.6904			
8	1	Strength Check: Strength	33.1754	-109.0350	-45.4828	-4.5477	-117.2127	36.2499			
8	1	Strength Check: Strength	-210.1228	-136.1639	-78.2729	-5.0680	-235.8599	14.7036			
8	2	Set Precast In Place: Set	0.0000	0.0000	0.0000	0.0000	0.0000	0.0000			
8	2	Set Precast In Place: Set	0.3306	0.0000	-46.7253	0.0000	-276.4320	0.0000			
8	2	Tension PT: Tension PT:	0.3341	0.0000	-47.2159	0.0000	-276.4320	0.0000			
8	2	Tension PT: Tension PT:	0.3341	0.0000	-47.2153	0.0000	-276.4320	0.0000			
8	2	Tension PT: Tension PT:	0.3341	0.0000	-47.2153	0.0000	-276.4320	0.0000			
8	2	Tension PT: Tension PT:	0.3341	0.0000	-47.2153	0.0000	-276.4320	0.0000			
8	2	Tension PT: Tension PT:	-283.8257	26.2605	-54.4915	0.6123	-340.3304	177.3652			
8	2	Add Superstructure: Add	-283.8255	26.2647	-54.5194	0.7246	-340.3304	177.3644			
8	2	Add Superstructure: Add	-283.8255	26.2647	-54.5193	0.7246	-340.3304	177.3644			
8	2	Add Superstructure: Add	-283.8255	26.2647	-54.5193	0.7246	-340.3304	177.3644			
8	2	Add Superstructure: Add	-283.6715	26.2505	-54.5153	0.7243	-340.2958	177.2682			
8	2	Add Superstructure: Add	-283.3705	26.2505	-97.0604	0.7243	-476.2237	177.2682			
8	2	Backfill to Grade: Backfill	-283.3625	26.2531	-98.1901	0.8130	-476.2237	177.2676			

RESULT : Member Sectional Forces

Member	Station	Result Case	Force X (kips)	Force Y (kips)	Force Z (kips)	Moment X (kips-ft)	Moment Y (kips-ft)	Moment Z (kips-ft)
8	2	Backfill to Grade: Backfill	-283.3625	26.2531	-98.1893	0.8130	-476.2237	177.2676
8	2	Backfill to Grade: Backfill	-283.3625	26.2531	-98.1893	0.8130	-476.2237	177.2676
8	2	Backfill to Grade: Backfill	-283.1930	26.2375	-98.1849	0.8127	-476.1856	177.1616
8	2	Backfill to Grade: Backfill	-250.3467	-197.3848	-97.1517	129.3779	-466.9194	-535.7358
8	2	Backfill to Grade: Backfill	-241.6439	-262.6459	-98.8358	128.9426	-481.9847	-738.7816
8	2	Pave: Pave: Creep	-250.3465	-201.1114	-97.1889	128.9495	-466.9194	-535.7327
8	2	Pave: Pave: Shrinkage	-250.3465	-201.1114	-97.1888	128.9495	-466.9194	-535.7327
8	2	Pave: Pave: PT	-250.3465	-201.1114	-97.1888	128.9495	-466.9194	-535.7327
8	2	Pave: Pave: Other PT	-250.4307	-201.1037	-97.1909	128.9496	-466.9384	-535.6801
8	2	Pave: Pave: step 1	-250.3861	-201.1037	-103.4939	128.9496	-487.0758	-535.6801
8	2	Open Bridge to Traffic:	-250.3852	-201.7592	-103.6131	128.8563	-487.0758	-535.6794
8	2	Open Bridge to Traffic:	-250.3852	-201.7592	-103.6129	128.8563	-487.0758	-535.6794
8	2	Open Bridge to Traffic:	-250.3852	-201.7592	-103.6129	128.8563	-487.0758	-535.6794
8	2	Open Bridge to Traffic:	-250.3706	-201.7606	-103.6126	128.8563	-487.0725	-535.6886
8	2	Open Bridge to Traffic:	-239.2849	-283.3369	-135.0003	128.3122	-599.4595	-789.4958
8	2	Open Bridge to Traffic:	-241.5020	-267.0217	-128.7227	128.4210	-576.9821	-738.7344
8	2	Partial Live Load for	-250.3703	-202.1962	-103.6586	128.7938	-487.0725	-535.6882
8	2	Partial Live Load for	-250.3703	-202.1962	-103.6585	128.7938	-487.0725	-535.6882
8	2	Partial Live Load for	-250.3703	-202.1962	-103.6585	128.7938	-487.0725	-535.6882
8	2	Partial Live Load for	-250.3553	-202.1975	-103.6581	128.7938	-487.0692	-535.6975
8	2	Partial Live Load for	-249.2468	-210.3552	-106.7969	128.7394	-498.3079	-561.0782
8	2	Remove Long Term Live	-249.2105	-232.9615	-111.9209	126.1227	-498.3079	-561.0597
8	2	Remove Long Term Live	-249.2106	-232.9615	-111.9090	126.1227	-498.3079	-561.0597
8	2	Remove Long Term Live	-249.2106	-232.9615	-111.9090	126.1227	-498.3079	-561.0597
8	2	Remove Long Term Live	-236.6892	-234.1006	-111.5934	126.0951	-495.4922	-568.8867
8	2	Remove Long Term Live	-237.7977	-225.9429	-108.4546	126.1495	-484.2535	-543.5060
8	2	Long Term Performance:	-237.7984	-225.5664	-108.3562	126.1642	-484.2535	-543.5061
8	2	Long Term Performance:	-237.7984	-225.5664	-108.3566	126.1642	-484.2535	-543.5061
8	2	Long Term Performance:	-237.7984	-225.5664	-108.3566	126.1642	-484.2535	-543.5061
8	2	Long Term Performance:	-237.0800	-225.6315	-108.3385	126.1626	-484.0920	-543.9552
8	2	Long Term Performance:	-228.2114	-290.8925	-133.4487	125.7273	-574.0015	-747.0010
8	2	Long Term Performance:	-225.9943	-307.2078	-139.7263	125.6185	-596.4790	-797.7625
8	2	Long Term Performance:	-206.0036	-330.6680	-188.3745	125.0470	-790.6847	-959.3557
8	2	Strength Check: Strength	-237.0800	-225.6315	-108.3385	126.1625	-484.0920	-543.9552

RESULT : Member Sectional Forces

Member	Station	Result Case	Force X (kips)	Force Y (kips)	Force Z (kips)	Moment X (kips-ft)	Moment Y (kips-ft)	Moment Z (kips-ft)
8	2	Strength Check: Strength	-237.0800	-225.6315	-108.3385	126.1625	-484.0920	-543.9552
8	2	Strength Check: Strength	-237.0800	-225.6315	-108.3385	126.1625	-484.0920	-543.9552
8	2	Strength Check: Strength	-237.0799	-225.6315	-108.3385	126.1625	-484.0920	-543.9552
8	2	Strength Check: Strength	33.5711	-250.6630	-101.4031	125.5800	-423.2313	-712.8762
8	2	Strength Check: Strength	-206.0036	-330.6680	-188.3745	125.0469	-790.6847	-959.3557
9	0	Set Precast In Place: Set	0.0000	0.0000	0.0000	0.0000	0.0000	0.0000
9	0	Set Precast In Place: Set	-0.3747	0.0000	52.9560	-117.5204	-276.4320	0.8315
9	0	Tension PT: Tension PT:	-0.3747	0.0000	52.9560	-117.5204	-276.4320	0.8315
9	0	Tension PT: Tension PT:	-0.3747	0.0000	52.9560	-117.5204	-276.4320	0.8315
9	0	Tension PT: Tension PT:	-0.3747	0.0000	52.9560	-117.5204	-276.4320	0.8315
9	0	Tension PT: Tension PT:	-0.3747	0.0000	52.9560	-117.5204	-276.4320	0.8315
9	0	Tension PT: Tension PT:	-284.5717	0.0001	50.9451	-116.2654	-340.3304	178.1922
9	0	Add Superstructure: Add	-284.5717	0.0001	50.9451	-116.2654	-340.3304	178.1922
9	0	Add Superstructure: Add	-284.5717	0.0001	50.9451	-116.2654	-340.3304	178.1922
9	0	Add Superstructure: Add	-284.5717	0.0001	50.9451	-116.2654	-340.3304	178.1922
9	0	Add Superstructure: Add	-284.4178	0.0001	50.9462	-116.2661	-340.2958	178.0960
9	0	Add Superstructure: Add	-284.7431	0.0001	96.9233	-116.2661	-476.2237	178.0960
9	0	Backfill to Grade: Backfill	-284.7431	0.0001	96.9233	-116.2661	-476.2237	178.0960
9	0	Backfill to Grade: Backfill	-284.7431	0.0001	96.9233	-116.2661	-476.2237	178.0960
9	0	Backfill to Grade: Backfill	-284.7431	0.0001	96.9233	-116.2661	-476.2237	178.0960
9	0	Backfill to Grade: Backfill	-284.5735	0.0001	96.9245	-116.2669	-476.1856	177.9900
9	0	Backfill to Grade: Backfill	-251.7216	185.2560	97.1570	-283.0017	-466.9194	-532.8179
9	0	Backfill to Grade: Backfill	-243.0312	240.1646	97.2185	-278.0243	-481.9847	-735.9019
9	0	Pave: Pave: Creep	-251.7216	185.2560	97.1570	-283.0017	-466.9194	-532.8179
9	0	Pave: Pave: Shrinkage	-251.7216	185.2560	97.1570	-283.0017	-466.9194	-532.8179
9	0	Pave: Pave: PT	-251.7216	185.2560	97.1570	-283.0017	-466.9194	-532.8179
9	0	Pave: Pave: Other PT	-251.8058	185.2560	97.1564	-283.0013	-466.9384	-532.7653
9	0	Pave: Pave: step 1	-251.8540	185.2560	103.9678	-283.0013	-487.0758	-532.7653
9	0	Open Bridge to Traffic:	-251.8540	185.2560	103.9678	-283.0013	-487.0758	-532.7653
9	0	Open Bridge to Traffic:	-251.8540	185.2560	103.9678	-283.0013	-487.0758	-532.7653
9	0	Open Bridge to Traffic:	-251.8540	185.2560	103.9678	-283.0013	-487.0758	-532.7653
9	0	Open Bridge to Traffic:	-251.8394	185.2560	103.9679	-283.0014	-487.0725	-532.7744
9	0	Open Bridge to Traffic:	-241.2002	253.8917	135.6895	-276.7797	-599.4595	-786.6295
9	0	Open Bridge to Traffic:	-243.3281	240.1646	129.3452	-278.0240	-576.9821	-735.8585

RESULT : Member Sectional Forces

Member	Station	Result Case	Force X (kips)	Force Y (kips)	Force Z (kips)	Moment X (kips-ft)	Moment Y (kips-ft)	Moment Z (kips-ft)
9	0	Partial Live Load for	-251.8394	185.2560	103.9679	-283.0014	-487.0725	-532.7744
9	0	Partial Live Load for	-251.8394	185.2560	103.9679	-283.0014	-487.0725	-532.7744
9	0	Partial Live Load for	-251.8394	185.2560	103.9679	-283.0014	-487.0725	-532.7744
9	0	Partial Live Load for	-251.8244	185.2560	103.9680	-283.0015	-487.0692	-532.7837
9	0	Partial Live Load for	-250.7605	192.1195	107.1402	-282.3793	-498.3079	-558.1692
9	0	Remove Long Term Live	-250.7605	192.1195	107.1402	-282.3793	-498.3079	-558.1692
9	0	Remove Long Term Live	-250.7605	192.1195	107.1402	-282.3793	-498.3079	-558.1692
9	0	Remove Long Term Live	-250.7605	192.1195	107.1402	-282.3793	-498.3079	-558.1692
9	0	Remove Long Term Live	-238.2375	192.1195	107.2288	-282.4347	-495.4922	-565.9961
9	0	Remove Long Term Live	-239.3014	185.2560	104.0566	-283.0568	-484.2535	-540.6106
9	0	Long Term Performance:	-239.3014	185.2560	104.0566	-283.0568	-484.2535	-540.6106
9	0	Long Term Performance:	-239.3014	185.2560	104.0566	-283.0568	-484.2535	-540.6106
9	0	Long Term Performance:	-239.3014	185.2560	104.0566	-283.0568	-484.2535	-540.6106
9	0	Long Term Performance:	-238.5829	185.2560	104.0617	-283.0600	-484.0920	-541.0597
9	0	Long Term Performance:	-230.0716	240.1646	129.4390	-278.0826	-574.0015	-744.1437
9	0	Long Term Performance:	-227.9437	253.8917	135.7833	-276.8383	-596.4790	-794.9147
9	0	Long Term Performance:	-208.6653	261.0423	187.7949	-303.4017	-790.6847	-956.3241
9	0	Strength Check: Strength	-238.5829	185.2560	104.0617	-283.0600	-484.0920	-541.0597
9	0	Strength Check: Strength	-238.5829	185.2560	104.0617	-283.0600	-484.0920	-541.0597
9	0	Strength Check: Strength	-238.5829	185.2560	104.0617	-283.0600	-484.0920	-541.0597
9	0	Strength Check: Strength	-238.5828	185.2560	104.0617	-283.0600	-484.0920	-541.0597
9	0	Strength Check: Strength	32.1037	185.2559	105.9770	-284.2552	-423.2313	-709.9763
9	0	Strength Check: Strength	-208.6653	261.0423	187.7949	-303.4017	-790.6847	-956.3241
9	1	Set Precast In Place: Set	0.0000	0.0000	0.0000	0.0000	0.0000	0.0000
9	1	Set Precast In Place: Set	-0.2796	0.0000	39.5168	-117.5204	-139.7376	0.8315
9	1	Tension PT: Tension PT:	-0.2796	0.0000	39.5168	-117.5204	-139.7376	0.8315
9	1	Tension PT: Tension PT:	-0.2796	0.0000	39.5168	-117.5204	-139.7376	0.8315
9	1	Tension PT: Tension PT:	-0.2796	0.0000	39.5168	-117.5204	-139.7376	0.8315
9	1	Tension PT: Tension PT:	-0.2796	0.0000	39.5168	-117.5204	-139.7376	0.8315
9	1	Tension PT: Tension PT:	-282.5361	0.0001	37.5197	-116.2741	-209.1039	176.9630
9	1	Add Superstructure: Add	-282.5361	0.0001	37.5197	-116.2741	-209.1039	176.9630
9	1	Add Superstructure: Add	-282.5361	0.0001	37.5197	-116.2741	-209.1039	176.9630
9	1	Add Superstructure: Add	-282.5361	0.0001	37.5197	-116.2741	-209.1039	176.9630
9	1	Add Superstructure: Add	-282.3844	0.0001	37.5207	-116.2748	-209.0666	176.8682

RESULT : Member Sectional Forces

Member	Station	Result Case	Force X (kips)	Force Y (kips)	Force Z (kips)	Moment X (kips-ft)	Moment Y (kips-ft)	Moment Z (kips-ft)
9	1	Add Superstructure: Add	-282.5471	0.0001	60.5093	-116.2748	-243.0486	176.8682
9	1	Backfill to Grade: Backfill	-282.5471	0.0001	60.5093	-116.2748	-243.0486	176.8682
9	1	Backfill to Grade: Backfill	-282.5471	0.0001	60.5093	-116.2748	-243.0486	176.8682
9	1	Backfill to Grade: Backfill	-282.5471	0.0001	60.5093	-116.2748	-243.0486	176.8682
9	1	Backfill to Grade: Backfill	-282.3790	0.0001	60.5105	-116.2756	-243.0072	176.7631
9	1	Backfill to Grade: Backfill	-249.5270	84.5010	60.7429	-189.1439	-233.0538	-135.2869
9	1	Backfill to Grade: Backfill	-240.8366	109.3251	60.8044	-184.1665	-247.9373	-220.5093
9	1	Pave: Pave: Creep	-249.5270	84.5010	60.7429	-189.1439	-233.0538	-135.2869
9	1	Pave: Pave: Shrinkage	-249.5270	84.5010	60.7429	-189.1439	-233.0538	-135.2869
9	1	Pave: Pave: PT	-249.5270	84.5010	60.7429	-189.1439	-233.0538	-135.2869
9	1	Pave: Pave: Other PT	-249.6109	84.5010	60.7424	-189.1435	-233.0745	-135.2346
9	1	Pave: Pave: step 1	-249.6350	84.5010	64.1481	-189.1435	-238.1088	-135.2346
9	1	Open Bridge to Traffic:	-249.6350	84.5010	64.1481	-189.1435	-238.1088	-135.2346
9	1	Open Bridge to Traffic:	-249.6350	84.5010	64.1481	-189.1435	-238.1088	-135.2346
9	1	Open Bridge to Traffic:	-249.6350	84.5010	64.1481	-189.1435	-238.1088	-135.2346
9	1	Open Bridge to Traffic:	-249.6204	84.5010	64.1482	-189.1436	-238.1052	-135.2436
9	1	Open Bridge to Traffic:	-238.8694	115.5311	80.0474	-182.9219	-280.0984	-241.7715
9	1	Open Bridge to Traffic:	-241.0196	109.3251	76.8676	-184.1662	-271.6998	-220.4660
9	1	Partial Live Load for	-249.6204	84.5010	64.1482	-189.1436	-238.1052	-135.2436
9	1	Partial Live Load for	-249.6204	84.5010	64.1482	-189.1436	-238.1052	-135.2436
9	1	Partial Live Load for	-249.6204	84.5010	64.1482	-189.1436	-238.1052	-135.2436
9	1	Partial Live Load for	-249.6057	84.5010	64.1483	-189.1437	-238.1016	-135.2529
9	1	Partial Live Load for	-248.5306	87.6040	65.7382	-188.5215	-242.3009	-145.9057
9	1	Remove Long Term Live	-248.5306	87.6040	65.7382	-188.5215	-242.3009	-145.9057
9	1	Remove Long Term Live	-248.5306	87.6040	65.7382	-188.5215	-242.3009	-145.9057
9	1	Remove Long Term Live	-248.5306	87.6040	65.7382	-188.5215	-242.3009	-145.9057
9	1	Remove Long Term Live	-236.0316	87.6040	65.8266	-188.5768	-239.2292	-153.7174
9	1	Remove Long Term Live	-237.1067	84.5010	64.2367	-189.1990	-235.0299	-143.0646
9	1	Long Term Performance:	-237.1067	84.5010	64.2367	-189.1990	-235.0299	-143.0646
9	1	Long Term Performance:	-237.1067	84.5010	64.2367	-189.1990	-235.0299	-143.0646
9	1	Long Term Performance:	-237.1067	84.5010	64.2367	-189.1990	-235.0299	-143.0646
9	1	Long Term Performance:	-236.3869	84.5010	64.2418	-189.2021	-234.8531	-143.5145
9	1	Long Term Performance:	-227.7861	109.3251	76.9612	-184.2247	-268.4476	-228.7368
9	1	Long Term Performance:	-225.6359	115.5311	80.1411	-182.9804	-276.8463	-250.0424

RESULT : Member Sectional Forces

Member	Station		Result Case	Force X (kips)	Force Y (kips)	Force Z (kips)	Moment X (kips-ft)	Moment Y (kips-ft)	Moment Z (kips-ft)
9	1	Long Term Performance:	-206.1970	122.6816	109.4761	-209.5438	-350.8045	-390.3117	
9	1	Strength Check: Strength	-236.3869	84.5010	64.2418	-189.2021	-234.8531	-143.5145	
9	1	Strength Check: Strength	-236.3869	84.5010	64.2418	-189.2021	-234.8531	-143.5145	
9	1	Strength Check: Strength	-236.3869	84.5010	64.2418	-189.2021	-234.8531	-143.5145	
9	1	Strength Check: Strength	-236.3869	84.5010	64.2418	-189.2021	-234.8531	-143.5145	
9	1	Strength Check: Strength	32.3856	84.5010	66.1436	-190.3887	-168.8005	-311.2185	
9	1	Strength Check: Strength	-206.1969	122.6816	109.4761	-209.5438	-350.8045	-390.3118	
9	2	Set Precast In Place: Set	0.0000	0.0000	0.0000	0.0000	0.0000	0.0000	
9	2	Set Precast In Place: Set	-0.1845	0.0000	26.0777	-117.5204	-42.7750	0.8315	
9	2	Tension PT: Tension PT:	-0.1845	0.0000	26.0777	-117.5204	-42.7750	0.8315	
9	2	Tension PT: Tension PT:	-0.1845	0.0000	26.0777	-117.5204	-42.7750	0.8315	
9	2	Tension PT: Tension PT:	-0.1845	0.0000	26.0777	-117.5204	-42.7750	0.8315	
9	2	Tension PT: Tension PT:	-0.1845	0.0000	26.0777	-117.5204	-42.7750	0.8315	
9	2	Tension PT: Tension PT:	-280.0009	0.0001	24.0978	-116.2829	-117.3946	175.7208	
9	2	Add Superstructure: Add	-280.0009	0.0001	24.0978	-116.2829	-117.3946	175.7208	
9	2	Add Superstructure: Add	-280.0009	0.0001	24.0978	-116.2829	-117.3946	175.7208	
9	2	Add Superstructure: Add	-280.0009	0.0001	24.0978	-116.2829	-117.3946	175.7208	
9	2	Add Superstructure: Add	-279.8952	0.0001	24.0985	-116.2834	-117.3664	175.6546	
9	2	Add Superstructure: Add	-279.8952	0.0001	24.0985	-116.2834	-117.3664	175.6546	
9	2	Backfill to Grade: Backfill	-279.8952	0.0001	24.0985	-116.2834	-117.3664	175.6546	
9	2	Backfill to Grade: Backfill	-279.8952	0.0001	24.0985	-116.2834	-117.3664	175.6546	
9	2	Backfill to Grade: Backfill	-279.8952	0.0001	24.0985	-116.2834	-117.3664	175.6546	
9	2	Backfill to Grade: Backfill	-279.7465	0.0001	24.0996	-116.2841	-117.3267	175.5617	
9	2	Backfill to Grade: Backfill	-246.8946	11.9575	24.3320	-121.5686	-106.6861	-23.9281	
9	2	Backfill to Grade: Backfill	-238.2042	15.1206	24.3935	-116.5912	-121.3878	-76.7449	
9	2	Pave: Pave: Creep	-246.8946	11.9575	24.3320	-121.5686	-106.6861	-23.9281	
9	2	Pave: Pave: Shrinkage	-246.8946	11.9575	24.3320	-121.5686	-106.6861	-23.9281	
9	2	Pave: Pave: PT	-246.8946	11.9575	24.3320	-121.5686	-106.6861	-23.9281	
9	2	Pave: Pave: Other PT	-246.9266	11.9575	24.3318	-121.5684	-106.6946	-23.9081	
9	2	Pave: Pave: step 1	-246.9266	11.9575	24.3318	-121.5684	-106.6946	-23.9081	
9	2	Open Bridge to Traffic:	-246.9266	11.9575	24.3318	-121.5684	-106.6946	-23.9081	
9	2	Open Bridge to Traffic:	-246.9266	11.9575	24.3318	-121.5684	-106.6946	-23.9081	
9	2	Open Bridge to Traffic:	-246.9266	11.9575	24.3318	-121.5684	-106.6946	-23.9081	
9	2	Open Bridge to Traffic:	-246.9105	11.9575	24.3319	-121.5685	-106.6903	-23.9181	

RESULT : Member Sectional Forces

Member	Station	Result Case	Force X (kips)	Force Y (kips)	Force Z (kips)	Moment X (kips-ft)	Moment Y (kips-ft)	Moment Z (kips-ft)
9	2	Open Bridge to Traffic:	-236.0474	15.9114	24.4088	-115.3468	-125.0674	-89.9392
9	2	Open Bridge to Traffic:	-238.2200	15.1206	24.3934	-116.5911	-121.3920	-76.7350
9	2	Partial Live Load for	-246.9105	11.9575	24.3319	-121.5685	-106.6903	-23.9181
9	2	Partial Live Load for	-246.9105	11.9575	24.3319	-121.5685	-106.6903	-23.9181
9	2	Partial Live Load for	-246.9105	11.9575	24.3319	-121.5685	-106.6903	-23.9181
9	2	Partial Live Load for	-246.8943	11.9575	24.3320	-121.5686	-106.6860	-23.9282
9	2	Partial Live Load for	-245.8080	12.3529	24.3397	-120.9464	-108.5237	-30.5303
9	2	Remove Long Term Live	-245.8080	12.3529	24.3397	-120.9464	-108.5237	-30.5303
9	2	Remove Long Term Live	-245.8080	12.3529	24.3397	-120.9464	-108.5237	-30.5303
9	2	Remove Long Term Live	-245.8080	12.3529	24.3397	-120.9464	-108.5237	-30.5303
9	2	Remove Long Term Live	-232.7511	12.3529	24.4321	-121.0041	-105.0418	-38.6908
9	2	Remove Long Term Live	-233.8374	11.9575	24.4244	-121.6263	-103.2041	-32.0887
9	2	Long Term Performance:	-233.8374	11.9575	24.4244	-121.6263	-103.2041	-32.0887
9	2	Long Term Performance:	-233.8374	11.9575	24.4244	-121.6263	-103.2041	-32.0887
9	2	Long Term Performance:	-233.8374	11.9575	24.4244	-121.6263	-103.2041	-32.0887
9	2	Long Term Performance:	-233.3094	11.9575	24.4282	-121.6287	-103.0633	-32.4188
9	2	Long Term Performance:	-224.6190	15.1206	24.4896	-116.6513	-117.7650	-85.2356
9	2	Long Term Performance:	-222.4464	15.9114	24.5050	-115.4069	-121.4404	-98.4398
9	2	Long Term Performance:	-202.8470	23.0619	31.1634	-141.9703	-142.1927	-217.5691
9	2	Strength Check: Strength	-233.3094	11.9575	24.4282	-121.6287	-103.0633	-32.4188
9	2	Strength Check: Strength	-233.3094	11.9575	24.4282	-121.6287	-103.0633	-32.4188
9	2	Strength Check: Strength	-233.3094	11.9575	24.4282	-121.6287	-103.0633	-32.4188
9	2	Strength Check: Strength	-233.3094	11.9575	24.4282	-121.6287	-103.0633	-32.4188
9	2	Strength Check: Strength	32.6674	11.9574	26.3101	-122.8049	-32.1344	-198.6583
9	2	Strength Check: Strength	-202.8470	23.0619	31.1634	-141.9703	-142.1927	-217.5691
10	0	Set Precast In Place: Set	0.0000	0.0000	0.0000	0.0000	0.0000	0.0000
10	0	Set Precast In Place: Set	0.0000	0.0000	26.0783	0.0000	-125.0657	0.0000
10	0	Tension PT: Tension PT:	0.0000	0.0000	26.0783	0.0000	-125.0657	0.0000
10	0	Tension PT: Tension PT:	0.0000	0.0000	26.0783	0.0000	-125.0657	0.0000
10	0	Tension PT: Tension PT:	0.0000	0.0000	26.0783	0.0000	-125.0657	0.0000
10	0	Tension PT: Tension PT:	0.0000	0.0000	26.0783	0.0000	-125.0657	0.0000
10	0	Tension PT: Tension PT:	-95.7053	-262.9480	26.0783	514.9398	-312.4886	174.8936
10	0	Add Superstructure: Add	-95.7053	-262.9480	26.0783	514.9398	-312.4886	174.8936
10	0	Add Superstructure: Add	-95.7053	-262.9480	26.0783	514.9398	-312.4886	174.8936

RESULT : Member Sectional Forces

Member	Station	Result Case	Force X (kips)	Force Y (kips)	Force Z (kips)	Moment X (kips-ft)	Moment Y (kips-ft)	Moment Z (kips-ft)
10	0	Add Superstructure: Add	-95.7053	-262.9480	26.0783	514.9398	-312.4886	174.8936
10	0	Add Superstructure: Add	-95.6691	-262.8486	26.0783	514.7452	-312.4178	174.8275
10	0	Add Superstructure: Add	-95.6691	-262.8486	26.0783	514.7452	-312.4178	174.8275
10	0	Backfill to Grade: Backfill	-95.6691	-262.8486	26.0783	514.7452	-312.4178	174.8275
10	0	Backfill to Grade: Backfill	-95.6691	-262.8486	26.0783	514.7452	-312.4178	174.8275
10	0	Backfill to Grade: Backfill	-95.6691	-262.8486	26.0783	514.7452	-312.4178	174.8275
10	0	Backfill to Grade: Backfill	-95.6183	-262.7089	26.0783	514.4716	-312.3182	174.7346
10	0	Backfill to Grade: Backfill	-95.6183	-227.7477	26.0783	444.0054	-312.3182	-24.7876
10	0	Backfill to Grade: Backfill	-95.6183	-218.4993	26.0783	444.0054	-312.3182	-77.5679
10	0	Pave: Pave: Creep	-95.6183	-227.7477	26.0783	444.0054	-312.3182	-24.7876
10	0	Pave: Pave: Shrinkage	-95.6183	-227.7477	26.0783	444.0054	-312.3182	-24.7876
10	0	Pave: Pave: PT	-95.6183	-227.7477	26.0783	444.0054	-312.3182	-24.7876
10	0	Pave: Pave: Other PT	-95.6292	-227.7778	26.0783	444.0644	-312.3397	-24.7676
10	0	Pave: Pave: step 1	-95.6292	-227.7778	26.0783	444.0644	-312.3397	-24.7676
10	0	Open Bridge to Traffic:	-95.6292	-227.7778	26.0783	444.0644	-312.3397	-24.7676
10	0	Open Bridge to Traffic:	-95.6292	-227.7778	26.0783	444.0644	-312.3397	-24.7676
10	0	Open Bridge to Traffic:	-95.6292	-227.7778	26.0783	444.0644	-312.3397	-24.7676
10	0	Open Bridge to Traffic:	-95.6237	-227.7626	26.0783	444.0347	-312.3288	-24.7777
10	0	Open Bridge to Traffic:	-95.6237	-216.2022	26.0783	444.0347	-312.3288	-90.7531
10	0	Open Bridge to Traffic:	-95.6237	-218.5143	26.0783	444.0347	-312.3288	-77.5580
10	0	Partial Live Load for	-95.6237	-227.7626	26.0783	444.0347	-312.3288	-24.7777
10	0	Partial Live Load for	-95.6237	-227.7626	26.0783	444.0347	-312.3288	-24.7777
10	0	Partial Live Load for	-95.6237	-227.7626	26.0783	444.0347	-312.3288	-24.7777
10	0	Partial Live Load for	-95.6182	-227.7475	26.0783	444.0050	-312.3180	-24.7878
10	0	Partial Live Load for	-95.6182	-226.5914	26.0783	444.0050	-312.3180	-31.3853
10	0	Remove Long Term Live	-95.6182	-226.5914	26.0783	444.0050	-312.3180	-31.3853
10	0	Remove Long Term Live	-95.6182	-226.5914	26.0783	444.0050	-312.3180	-31.3853
10	0	Remove Long Term Live	-95.6182	-226.5914	26.0783	444.0050	-312.3180	-31.3853
10	0	Remove Long Term Live	-91.1524	-214.3217	26.0783	419.9766	-303.5724	-39.5460
10	0	Remove Long Term Live	-91.1524	-215.4777	26.0783	419.9766	-303.5724	-32.9485
10	0	Long Term Performance:	-91.1524	-215.4777	26.0783	419.9766	-303.5724	-32.9485
10	0	Long Term Performance:	-91.1524	-215.4777	26.0783	419.9766	-303.5724	-32.9485
10	0	Long Term Performance:	-91.1524	-215.4777	26.0783	419.9766	-303.5724	-32.9485
10	0	Long Term Performance:	-90.9718	-214.9815	26.0783	419.0049	-303.2188	-33.2785

RESULT : Member Sectional Forces

Member	Station	Result Case	Force X (kips)	Force Y (kips)	Force Z (kips)	Moment X (kips-ft)	Moment Y (kips-ft)	Moment Z (kips-ft)
10	0	Long Term Performance:	-90.9718	-205.7331	26.0783	419.0049	-303.2188	-86.0588
10	0	Long Term Performance:	-90.9718	-203.4210	26.0783	419.0049	-303.2188	-99.2539
10	0	Long Term Performance:	-90.9718	-182.5142	32.5979	394.3418	-334.4852	-218.5682
10	0	Strength Check: Strength	-90.9718	-214.9815	26.0783	419.0049	-303.2188	-33.2785
10	0	Strength Check: Strength	-90.9718	-214.9815	26.0783	419.0049	-303.2188	-33.2785
10	0	Strength Check: Strength	-90.9718	-214.9815	26.0783	419.0049	-303.2188	-33.2785
10	0	Strength Check: Strength	-90.9717	-214.9815	26.0783	419.0048	-303.2187	-33.2786
10	0	Strength Check: Strength	0.0000	34.9612	26.0783	-70.4662	-125.0657	-199.5222
10	0	Strength Check: Strength	-90.9717	-182.5142	32.5979	394.3417	-334.4851	-218.5682
10	1	Set Precast In Place: Set	0.0000	0.0000	0.0000	0.0000	0.0000	0.0000
10	1	Set Precast In Place: Set	0.0000	0.0000	13.0392	0.0000	-31.2664	0.0000
10	1	Tension PT: Tension PT:	0.0000	0.0000	13.0392	0.0000	-31.2664	0.0000
10	1	Tension PT: Tension PT:	0.0000	0.0000	13.0392	0.0000	-31.2664	0.0000
10	1	Tension PT: Tension PT:	0.0000	0.0000	13.0392	0.0000	-31.2664	0.0000
10	1	Tension PT: Tension PT:	0.0000	0.0000	13.0392	0.0000	-31.2664	0.0000
10	1	Tension PT: Tension PT:	0.0000	0.0000	13.0392	0.0000	-31.2664	0.0000
10	1	Add Superstructure: Add	0.0000	0.0000	13.0392	0.0000	-31.2664	0.0000
10	1	Add Superstructure: Add	0.0000	0.0000	13.0392	0.0000	-31.2664	0.0000
10	1	Add Superstructure: Add	0.0000	0.0000	13.0392	0.0000	-31.2664	0.0000
10	1	Add Superstructure: Add	0.0000	0.0000	13.0392	0.0000	-31.2664	0.0000
10	1	Add Superstructure: Add	0.0000	0.0000	13.0392	0.0000	-31.2664	0.0000
10	1	Backfill to Grade: Backfill	0.0000	0.0000	13.0392	0.0000	-31.2664	0.0000
10	1	Backfill to Grade: Backfill	0.0000	0.0000	13.0392	0.0000	-31.2664	0.0000
10	1	Backfill to Grade: Backfill	0.0000	0.0000	13.0392	0.0000	-31.2664	0.0000
10	1	Backfill to Grade: Backfill	0.0000	0.0000	13.0392	0.0000	-31.2664	0.0000
10	1	Backfill to Grade: Backfill	0.0000	21.5810	13.0392	-43.4976	-31.2664	-51.7486
10	1	Backfill to Grade: Backfill	0.0000	27.2899	13.0392	-43.4976	-31.2664	-65.4380
10	1	Pave: Pave: Creep	0.0000	21.5810	13.0392	-43.4976	-31.2664	-51.7486
10	1	Pave: Pave: Shrinkage	0.0000	21.5810	13.0392	-43.4976	-31.2664	-51.7486
10	1	Pave: Pave: PT	0.0000	21.5810	13.0392	-43.4976	-31.2664	-51.7486
10	1	Pave: Pave: Other PT	0.0000	21.5810	13.0392	-43.4976	-31.2664	-51.7487
10	1	Pave: Pave: step 1	0.0000	21.5810	13.0392	-43.4976	-31.2664	-51.7487
10	1	Open Bridge to Traffic:	0.0000	21.5810	13.0392	-43.4976	-31.2664	-51.7487
10	1	Open Bridge to Traffic:	0.0000	21.5810	13.0392	-43.4976	-31.2664	-51.7487

RESULT : Member Sectional Forces

Member	Station		Result Case	Force X (kips)	Force Y (kips)	Force Z (kips)	Moment X (kips-ft)	Moment Y (kips-ft)	Moment Z (kips-ft)
10	1	Open Bridge to Traffic:	0.0000	21.5810	13.0392	-43.4976	-31.2664	-51.7487	
10	1	Open Bridge to Traffic:	0.0000	21.5810	13.0392	-43.4976	-31.2664	-51.7486	
10	1	Open Bridge to Traffic:	0.0000	28.7171	13.0392	-43.4976	-31.2664	-68.8602	
10	1	Open Bridge to Traffic:	0.0000	27.2899	13.0392	-43.4976	-31.2664	-65.4379	
10	1	Partial Live Load for	0.0000	21.5810	13.0392	-43.4976	-31.2664	-51.7486	
10	1	Partial Live Load for	0.0000	21.5810	13.0392	-43.4976	-31.2664	-51.7486	
10	1	Partial Live Load for	0.0000	21.5810	13.0392	-43.4976	-31.2664	-51.7486	
10	1	Partial Live Load for	0.0000	21.5810	13.0392	-43.4976	-31.2664	-51.7487	
10	1	Partial Live Load for	0.0000	22.2946	13.0392	-43.4976	-31.2664	-53.4598	
10	1	Remove Long Term Live	0.0000	22.2946	13.0392	-43.4976	-31.2664	-53.4598	
10	1	Remove Long Term Live	0.0000	22.2946	13.0392	-43.4976	-31.2664	-53.4598	
10	1	Remove Long Term Live	0.0000	22.2946	13.0392	-43.4976	-31.2664	-53.4598	
10	1	Remove Long Term Live	0.0000	22.2946	13.0392	-43.4976	-31.2664	-53.4598	
10	1	Remove Long Term Live	0.0000	21.5810	13.0392	-43.4976	-31.2664	-51.7487	
10	1	Long Term Performance:	0.0000	21.5810	13.0392	-43.4976	-31.2664	-51.7487	
10	1	Long Term Performance:	0.0000	21.5810	13.0392	-43.4976	-31.2664	-51.7487	
10	1	Long Term Performance:	0.0000	21.5810	13.0392	-43.4976	-31.2664	-51.7487	
10	1	Long Term Performance:	0.0000	21.5810	13.0392	-43.4976	-31.2664	-51.7486	
10	1	Long Term Performance:	0.0000	27.2899	13.0392	-43.4976	-31.2664	-65.4379	
10	1	Long Term Performance:	0.0000	28.7171	13.0392	-43.4976	-31.2664	-68.8602	
10	1	Long Term Performance:	0.0000	41.6225	16.2990	-58.7218	-39.0830	-99.8059	
10	1	Strength Check: Strength	0.0000	21.5810	13.0392	-43.4976	-31.2664	-51.7486	
10	1	Strength Check: Strength	0.0000	21.5810	13.0392	-43.4976	-31.2664	-51.7486	
10	1	Strength Check: Strength	0.0000	21.5810	13.0392	-43.4976	-31.2664	-51.7486	
10	1	Strength Check: Strength	0.0000	21.5810	13.0392	-43.4976	-31.2664	-51.7487	
10	1	Strength Check: Strength	0.0000	21.5810	13.0392	-43.4976	-31.2664	-51.7487	
10	1	Strength Check: Strength	0.0000	41.6225	16.2990	-58.7218	-39.0830	-99.8060	
10	2	Set Precast In Place: Set	0.0000	0.0000	0.0000	0.0000	0.0000	0.0000	
10	2	Set Precast In Place: Set	0.0000	0.0000	0.0000	0.0000	0.0000	0.0000	
10	2	Tension PT: Tension PT:	0.0000	0.0000	0.0000	0.0000	0.0000	0.0000	
10	2	Tension PT: Tension PT:	0.0000	0.0000	0.0000	0.0000	0.0000	0.0000	
10	2	Tension PT: Tension PT:	0.0000	0.0000	0.0000	0.0000	0.0000	0.0000	
10	2	Tension PT: Tension PT:	0.0000	0.0000	0.0000	0.0000	0.0000	0.0000	
10	2	Tension PT: Tension PT:	0.0000	0.0000	0.0000	0.0000	0.0000	0.0000	

RESULT : Member Sectional Forces

Member	Station		Result Case	Force X (kips)		Force Y (kips)		Force Z (kips)	Moment X (kips-ft)	Moment Y (kips-ft)	Moment Z (kips-ft)
10	2	Add Superstructure: Add	0.0000	0.0000	0.0000	0.0000	0.0000	0.0000			
10	2	Add Superstructure: Add	0.0000	0.0000	0.0000	0.0000	0.0000	0.0000			
10	2	Add Superstructure: Add	0.0000	0.0000	0.0000	0.0000	0.0000	0.0000			
10	2	Add Superstructure: Add	0.0000	0.0000	0.0000	0.0000	0.0000	0.0000			
10	2	Add Superstructure: Add	0.0000	0.0000	0.0000	0.0000	0.0000	0.0000			
10	2	Backfill to Grade: Backfill	0.0000	0.0000	0.0000	0.0000	0.0000	0.0000			
10	2	Backfill to Grade: Backfill	0.0000	0.0000	0.0000	0.0000	0.0000	0.0000			
10	2	Backfill to Grade: Backfill	0.0000	0.0000	0.0000	0.0000	0.0000	0.0000			
10	2	Backfill to Grade: Backfill	0.0000	0.0000	0.0000	0.0000	0.0000	0.0000			
10	2	Backfill to Grade: Backfill	0.0000	0.0000	0.0000	0.0000	0.0000	0.0000			
10	2	Backfill to Grade: Backfill	0.0000	0.0000	0.0000	0.0000	0.0000	0.0000			
10	2	Pave: Pave: Creep	0.0000	0.0000	0.0000	0.0000	0.0000	0.0000			
10	2	Pave: Pave: Shrinkage	0.0000	0.0000	0.0000	0.0000	0.0000	0.0000			
10	2	Pave: Pave: PT	0.0000	0.0000	0.0000	0.0000	0.0000	0.0000			
10	2	Pave: Pave: Other PT	0.0000	0.0000	0.0000	0.0000	0.0000	0.0000			
10	2	Pave: Pave: step 1	0.0000	0.0000	0.0000	0.0000	0.0000	0.0000			
10	2	Open Bridge to Traffic:	0.0000	0.0000	0.0000	0.0000	0.0000	0.0000			
10	2	Open Bridge to Traffic:	0.0000	0.0000	0.0000	0.0000	0.0000	0.0000			
10	2	Open Bridge to Traffic:	0.0000	0.0000	0.0000	0.0000	0.0000	0.0000			
10	2	Open Bridge to Traffic:	0.0000	0.0000	0.0000	0.0000	0.0000	0.0000			
10	2	Open Bridge to Traffic:	0.0000	0.0000	0.0000	0.0000	0.0000	0.0000			
10	2	Open Bridge to Traffic:	0.0000	0.0000	0.0000	0.0000	0.0000	0.0000			
10	2	Partial Live Load for	0.0000	0.0000	0.0000	0.0000	0.0000	0.0000			
10	2	Partial Live Load for	0.0000	0.0000	0.0000	0.0000	0.0000	0.0000			
10	2	Partial Live Load for	0.0000	0.0000	0.0000	0.0000	0.0000	0.0000			
10	2	Partial Live Load for	0.0000	0.0000	0.0000	0.0000	0.0000	0.0000			
10	2	Partial Live Load for	0.0000	0.0000	0.0000	0.0000	0.0000	0.0000			
10	2	Remove Long Term Live	0.0000	0.0000	0.0000	0.0000	0.0000	0.0000			
10	2	Remove Long Term Live	0.0000	0.0000	0.0000	0.0000	0.0000	0.0000			
10	2	Remove Long Term Live	0.0000	0.0000	0.0000	0.0000	0.0000	0.0000			
10	2	Remove Long Term Live	0.0000	0.0000	0.0000	0.0000	0.0000	0.0000			
10	2	Remove Long Term Live	0.0000	0.0000	0.0000	0.0000	0.0000	0.0000			
10	2	Long Term Performance:	0.0000	0.0000	0.0000	0.0000	0.0000	0.0000			
10	2	Long Term Performance:	0.0000	0.0000	0.0000	0.0000	0.0000	0.0000			

RESULT : Member Sectional Forces

Member	Station	Result Case	Force X (kips)	Force Y (kips)	Force Z (kips)	Moment X (kips-ft)	Moment Y (kips-ft)	Moment Z (kips-ft)
10	2	Long Term Performance:	0.0000	0.0000	0.0000	0.0000	0.0000	0.0000
10	2	Long Term Performance:	0.0000	0.0000	0.0000	0.0000	0.0000	0.0000
10	2	Long Term Performance:	0.0000	0.0000	0.0000	0.0000	0.0000	0.0000
10	2	Long Term Performance:	0.0000	0.0000	0.0000	0.0000	0.0000	0.0000
10	2	Long Term Performance:	0.0000	0.0000	0.0000	0.0000	0.0000	0.0000
10	2	Strength Check: Strength	0.0000	0.0000	0.0000	0.0000	0.0000	0.0000
10	2	Strength Check: Strength	0.0000	0.0000	0.0000	0.0000	0.0000	0.0000
10	2	Strength Check: Strength	0.0000	0.0000	0.0000	0.0000	0.0000	0.0000
10	2	Strength Check: Strength	0.0000	0.0000	0.0000	0.0000	0.0000	0.0000
10	2	Strength Check: Strength	0.0000	0.0000	0.0000	0.0000	0.0000	0.0000
10	2	Strength Check: Strength	0.0000	0.0000	0.0000	0.0000	0.0000	0.0000

RESULT : Member Stresses

Member	Station	Result Case	(P/A) @ Centroid (kips/in²)	Normal Stress @ Point 1 (kips/in²)	Normal Stress @ Point 2 (kips/in²)	Normal Stress @ Point 3 (kips/in²)	Normal Stress @ Point 4 (kips/in²)	Normal Stress @ Point 5	Normal Stress @ Point 6	Max ABS Total Stress (kips/in²)
1	0	Set Precast In	0.0000	0.0000	0.0000	0.0000	0.0000	0.0000	0.0000	0.0000
1	0	Set Precast In	0.0000	0.0000	0.0000	0.0000	0.0000	0.0000	0.0000	0.0000
1	0	Tension PT:	0.0000	0.0000	0.0000	0.0000	0.0000	0.0000	0.0000	0.0000
1	0	Tension PT:	0.0000	0.0000	0.0000	0.0000	0.0000	0.0000	0.0000	0.0000
1	0	Tension PT:	0.0000	0.0000	0.0000	0.0000	0.0000	0.0000	0.0000	0.0000
1	0	Tension PT:	0.0000	0.0000	0.0000	0.0000	0.0000	0.0000	0.0000	0.0000
1	0	Tension PT:	0.0000	0.0000	0.0000	0.0000	0.0000	0.0000	0.0000	0.0000
1	0	Add	0.0000	0.0000	0.0000	0.0000	0.0000	0.0000	0.0000	0.0000
1	0	Add	0.0000	0.0000	0.0000	0.0000	0.0000	0.0000	0.0000	0.0000
1	0	Add	0.0000	0.0000	0.0000	0.0000	0.0000	0.0000	0.0000	0.0000
1	0	Add	0.0000	0.0000	0.0000	0.0000	0.0000	0.0000	0.0000	0.0000
1	0	Add	0.0000	0.0000	0.0000	0.0000	0.0000	0.0000	0.0000	0.0000
1	0	Backfill to Grade:	0.0000	0.0000	0.0000	0.0000	0.0000	0.0000	0.0000	0.0000
1	0	Backfill to Grade:	0.0000	0.0000	0.0000	0.0000	0.0000	0.0000	0.0000	0.0000
1	0	Backfill to Grade:	0.0000	0.0000	0.0000	0.0000	0.0000	0.0000	0.0000	0.0000
1	0	Backfill to Grade:	0.0000	0.0000	0.0000	0.0000	0.0000	0.0000	0.0000	0.0000
1	0	Backfill to Grade:	0.0000	0.0000	0.0000	0.0000	0.0000	0.0000	0.0000	0.0000
1	0	Backfill to Grade:	0.0000	0.0000	0.0000	0.0000	0.0000	0.0000	0.0000	0.0000
1	0	Pave: Pave:	0.0000	0.0000	0.0000	0.0000	0.0000	0.0000	0.0000	0.0000

RESULT : Member Stresses

Member	Station	Result Case	(P/A) @ Centroid (kips/in²)	Normal Stress @ Point 1 (kips/in²)	Normal Stress @ Point 2 (kips/in²)	Normal Stress @ Point 3 (kips/in²)	Normal Stress @ Point 4 (kips/in²)	Normal Stress @ Point 5	Normal Stress @ Point 6	Max ABS Total Stress (kips/in²)
1	0	Pave: Pave:	0.0000	0.0000	0.0000	0.0000	0.0000	0.0000	0.0000	0.0000
1	0	Pave: Pave: PT	0.0000	0.0000	0.0000	0.0000	0.0000	0.0000	0.0000	0.0000
1	0	Pave: Pave:	0.0000	0.0000	0.0000	0.0000	0.0000	0.0000	0.0000	0.0000
1	0	Pave: Pave: step	0.0000	0.0000	0.0000	0.0000	0.0000	0.0000	0.0000	0.0000
1	0	Open Bridge to	0.0000	0.0000	0.0000	0.0000	0.0000	0.0000	0.0000	0.0000
1	0	Open Bridge to	0.0000	0.0000	0.0000	0.0000	0.0000	0.0000	0.0000	0.0000
1	0	Open Bridge to	0.0000	0.0000	0.0000	0.0000	0.0000	0.0000	0.0000	0.0000
1	0	Open Bridge to	0.0000	0.0000	0.0000	0.0000	0.0000	0.0000	0.0000	0.0000
1	0	Open Bridge to	0.0000	0.0000	0.0000	0.0000	0.0000	0.0000	0.0000	0.0000
1	0	Open Bridge to	0.0000	0.0000	0.0000	0.0000	0.0000	0.0000	0.0000	0.0000
1	0	Partial Live Load	0.0000	0.0000	0.0000	0.0000	0.0000	0.0000	0.0000	0.0000
1	0	Partial Live Load	0.0000	0.0000	0.0000	0.0000	0.0000	0.0000	0.0000	0.0000
1	0	Partial Live Load	0.0000	0.0000	0.0000	0.0000	0.0000	0.0000	0.0000	0.0000
1	0	Partial Live Load	0.0000	0.0000	0.0000	0.0000	0.0000	0.0000	0.0000	0.0000
1	0	Partial Live Load	0.0000	0.0000	0.0000	0.0000	0.0000	0.0000	0.0000	0.0000
1	0	Remove Long	0.0000	0.0000	0.0000	0.0000	0.0000	0.0000	0.0000	0.0000
1	0	Remove Long	0.0000	0.0000	0.0000	0.0000	0.0000	0.0000	0.0000	0.0000
1	0	Remove Long	0.0000	0.0000	0.0000	0.0000	0.0000	0.0000	0.0000	0.0000
1	0	Remove Long	0.0000	0.0000	0.0000	0.0000	0.0000	0.0000	0.0000	0.0000
1	0	Remove Long	0.0000	0.0000	0.0000	0.0000	0.0000	0.0000	0.0000	0.0000
1	0	Long Term	0.0000	0.0000	0.0000	0.0000	0.0000	0.0000	0.0000	0.0000
1	0	Long Term	0.0000	0.0000	0.0000	0.0000	0.0000	0.0000	0.0000	0.0000
1	0	Long Term	0.0000	0.0000	0.0000	0.0000	0.0000	0.0000	0.0000	0.0000
1	0	Long Term	0.0000	0.0000	0.0000	0.0000	0.0000	0.0000	0.0000	0.0000
1	0	Long Term	0.0000	0.0000	0.0000	0.0000	0.0000	0.0000	0.0000	0.0000
1	0	Long Term	0.0000	0.0000	0.0000	0.0000	0.0000	0.0000	0.0000	0.0000
1	0	Long Term	0.0000	0.0000	0.0000	0.0000	0.0000	0.0000	0.0000	0.0000
1	0	Strength Check:	0.0000	0.0000	0.0000	0.0000	0.0000	0.0000	0.0000	0.0000
1	0	Strength Check:	0.0000	0.0000	0.0000	0.0000	0.0000	0.0000	0.0000	0.0000
1	0	Strength Check:	0.0000	0.0000	0.0000	0.0000	0.0000	0.0000	0.0000	0.0000
1	0	Strength Check:	0.0000	0.0000	0.0000	0.0000	0.0000	0.0000	0.0000	0.0000
1	0	Strength Check:	0.0000	0.0000	0.0000	0.0000	0.0000	0.0000	0.0000	0.0000
1	0	Strength Check:	0.0000	0.0000	0.0000	0.0000	0.0000	0.0000	0.0000	0.0000
1	1	Set Precast In	0.0000	0.0000	0.0000	0.0000	0.0000	0.0000	0.0000	0.0000

RESULT : Member Stresses

Member	Station	Result Case	(P/A) @ Centroid (kips/in²)	Normal Stress @ Point 1 (kips/in²)	Normal Stress @ Point 2 (kips/in²)	Normal Stress @ Point 3 (kips/in²)	Normal Stress @ Point 4 (kips/in²)	Normal Stress @ Point 5	Normal Stress @ Point 6	Max ABS Total Stress (kips/in²)
1	1	Set Precast In	0.0000	0.0055	-0.0055	-0.0055	0.0055	0.0000	0.0000	0.0055
1	1	Tension PT:	0.0000	0.0055	-0.0055	-0.0055	0.0055	0.0000	0.0000	-0.0055
1	1	Tension PT:	0.0000	0.0055	-0.0055	-0.0055	0.0055	0.0000	0.0000	0.0055
1	1	Tension PT:	0.0000	0.0055	-0.0055	-0.0055	0.0055	0.0000	0.0000	-0.0055
1	1	Tension PT:	0.0000	0.0055	-0.0055	-0.0055	0.0055	0.0000	0.0000	0.0055
1	1	Tension PT:	0.0000	0.0055	-0.0055	-0.0055	0.0055	0.0000	0.0000	0.0055
1	1	Add	0.0000	0.0055	-0.0055	-0.0055	0.0055	0.0000	0.0000	0.0055
1	1	Add	0.0000	0.0055	-0.0055	-0.0055	0.0055	0.0000	0.0000	-0.0055
1	1	Add	0.0000	0.0055	-0.0055	-0.0055	0.0055	0.0000	0.0000	0.0055
1	1	Add	0.0000	0.0055	-0.0055	-0.0055	0.0055	0.0000	0.0000	0.0055
1	1	Add	0.0000	0.0055	-0.0055	-0.0055	0.0055	0.0000	0.0000	0.0055
1	1	Backfill to Grade:	0.0000	0.0055	-0.0055	-0.0055	0.0055	0.0000	0.0000	0.0055
1	1	Backfill to Grade:	0.0000	0.0055	-0.0055	-0.0055	0.0055	0.0000	0.0000	-0.0055
1	1	Backfill to Grade:	0.0000	0.0055	-0.0055	-0.0055	0.0055	0.0000	0.0000	0.0055
1	1	Backfill to Grade:	0.0000	0.0055	-0.0055	-0.0055	0.0055	0.0000	0.0000	0.0055
1	1	Backfill to Grade:	0.0000	0.0744	0.0633	-0.0744	-0.0633	0.0000	0.0000	0.0744
1	1	Backfill to Grade:	0.0000	0.0933	0.0822	-0.0933	-0.0822	0.0000	0.0000	0.0933
1	1	Pave: Pave:	0.0000	0.0744	0.0633	-0.0744	-0.0633	0.0000	0.0000	-0.0744
1	1	Pave: Pave:	0.0000	0.0744	0.0633	-0.0744	-0.0633	0.0000	0.0000	0.0744
1	1	Pave: Pave: PT	0.0000	0.0744	0.0633	-0.0744	-0.0633	0.0000	0.0000	0.0744
1	1	Pave: Pave:	0.0000	0.0744	0.0633	-0.0744	-0.0633	0.0000	0.0000	-0.0744
1	1	Pave: Pave: step	0.0000	0.0744	0.0633	-0.0744	-0.0633	0.0000	0.0000	-0.0744
1	1	Open Bridge to	0.0000	0.0744	0.0633	-0.0744	-0.0633	0.0000	0.0000	0.0744
1	1	Open Bridge to	0.0000	0.0744	0.0633	-0.0744	-0.0633	0.0000	0.0000	-0.0744
1	1	Open Bridge to	0.0000	0.0744	0.0633	-0.0744	-0.0633	0.0000	0.0000	0.0744
1	1	Open Bridge to	0.0000	0.0744	0.0633	-0.0744	-0.0633	0.0000	0.0000	0.0744
1	1	Open Bridge to	0.0000	0.0980	0.0869	-0.0980	-0.0869	0.0000	0.0000	0.0980
1	1	Open Bridge to	0.0000	0.0933	0.0822	-0.0933	-0.0822	0.0000	0.0000	0.0933
1	1	Partial Live Load	0.0000	0.0744	0.0633	-0.0744	-0.0633	0.0000	0.0000	-0.0744
1	1	Partial Live Load	0.0000	0.0744	0.0633	-0.0744	-0.0633	0.0000	0.0000	-0.0744
1	1	Partial Live Load	0.0000	0.0744	0.0633	-0.0744	-0.0633	0.0000	0.0000	-0.0744
1	1	Partial Live Load	0.0000	0.0744	0.0633	-0.0744	-0.0633	0.0000	0.0000	0.0744
1	1	Partial Live Load	0.0000	0.0768	0.0657	-0.0768	-0.0657	0.0000	0.0000	-0.0768
1	1	Remove Long	0.0000	0.0768	0.0657	-0.0768	-0.0657	0.0000	0.0000	-0.0768

RESULT : Member Stresses

Member	Station	Result Case	(P/A) @ Centroid (kips/in²)	Normal Stress @ Point 1 (kips/in²)	Normal Stress @ Point 2 (kips/in²)	Normal Stress @ Point 3 (kips/in²)	Normal Stress @ Point 4 (kips/in²)	Normal Stress @ Point 5	Normal Stress @ Point 6	Max ABS Total Stress (kips/in²)
1	1	Remove Long	0.0000	0.0768	0.0657	-0.0768	-0.0657	0.0000	0.0000	-0.0768
1	1	Remove Long	0.0000	0.0768	0.0657	-0.0768	-0.0657	0.0000	0.0000	0.0768
1	1	Remove Long	0.0000	0.0768	0.0657	-0.0768	-0.0657	0.0000	0.0000	0.0768
1	1	Remove Long	0.0000	0.0744	0.0633	-0.0744	-0.0633	0.0000	0.0000	0.0744
1	1	Long Term	0.0000	0.0744	0.0633	-0.0744	-0.0633	0.0000	0.0000	-0.0744
1	1	Long Term	0.0000	0.0744	0.0633	-0.0744	-0.0633	0.0000	0.0000	0.0744
1	1	Long Term	0.0000	0.0744	0.0633	-0.0744	-0.0633	0.0000	0.0000	0.0744
1	1	Long Term	0.0000	0.0744	0.0633	-0.0744	-0.0633	0.0000	0.0000	-0.0744
1	1	Long Term	0.0000	0.0933	0.0822	-0.0933	-0.0822	0.0000	0.0000	0.0933
1	1	Long Term	0.0000	0.0980	0.0869	-0.0980	-0.0869	0.0000	0.0000	0.0980
1	1	Long Term	0.0000	0.1412	0.1274	-0.1412	-0.1274	0.0000	0.0000	0.1412
1	1	Strength Check:	0.0000	0.0744	0.0633	-0.0744	-0.0633	0.0000	0.0000	-0.0744
1	1	Strength Check:	0.0000	0.0744	0.0633	-0.0744	-0.0633	0.0000	0.0000	0.0744
1	1	Strength Check:	0.0000	0.0744	0.0633	-0.0744	-0.0633	0.0000	0.0000	-0.0744
1	1	Strength Check:	0.0000	0.0744	0.0633	-0.0744	-0.0633	0.0000	0.0000	0.0744
1	1	Strength Check:	0.0000	0.0744	0.0633	-0.0744	-0.0633	0.0000	0.0000	0.0744
1	1	Strength Check:	0.0000	0.1412	0.1274	-0.1412	-0.1274	0.0000	0.0000	-0.1412
1	2	Set Precast In	0.0000	0.0000	0.0000	0.0000	0.0000	0.0000	0.0000	0.0000
1	2	Set Precast In	0.0000	0.0221	-0.0221	-0.0221	0.0221	0.0000	0.0000	0.0221
1	2	Tension PT:	0.0000	0.0221	-0.0221	-0.0221	0.0221	0.0000	0.0000	-0.0221
1	2	Tension PT:	0.0000	0.0221	-0.0221	-0.0221	0.0221	0.0000	0.0000	-0.0221
1	2	Tension PT:	0.0000	0.0221	-0.0221	-0.0221	0.0221	0.0000	0.0000	-0.0221
1	2	Tension PT:	0.0000	0.0221	-0.0221	-0.0221	0.0221	0.0000	0.0000	-0.0221
1	2	Tension PT:	0.0413	-0.2766	-0.2466	0.3591	0.3291	0.0000	0.0000	0.3591
1	2	Add	0.0413	-0.2766	-0.2466	0.3591	0.3291	0.0000	0.0000	0.3591
1	2	Add	0.0413	-0.2766	-0.2466	0.3591	0.3291	0.0000	0.0000	0.3591
1	2	Add	0.0413	-0.2766	-0.2466	0.3591	0.3291	0.0000	0.0000	0.3591
1	2	Add	0.0412	-0.2765	-0.2466	0.3590	0.3290	0.0000	0.0000	0.3590
1	2	Add	0.0412	-0.2765	-0.2466	0.3590	0.3290	0.0000	0.0000	0.3590
1	2	Backfill to Grade:	0.0412	-0.2765	-0.2466	0.3590	0.3290	0.0000	0.0000	0.3590
1	2	Backfill to Grade:	0.0412	-0.2765	-0.2466	0.3590	0.3290	0.0000	0.0000	0.3590
1	2	Backfill to Grade:	0.0412	-0.2765	-0.2466	0.3590	0.3290	0.0000	0.0000	0.3590
1	2	Backfill to Grade:	0.0412	-0.2764	-0.2465	0.3588	0.3289	0.0000	0.0000	0.3588
1	2	Backfill to Grade:	0.0412	-0.0119	0.0180	0.0944	0.0645	0.0000	0.0000	0.0944

RESULT : Member Stresses

Member	Station	Result Case	(P/A) @ Centroid (kips/in²)	Normal Stress @ Point 1 (kips/in²)	Normal Stress @ Point 2 (kips/in²)	Normal Stress @ Point 3 (kips/in²)	Normal Stress @ Point 4 (kips/in²)	Normal Stress @ Point 5	Normal Stress @ Point 6	Max ABS Total Stress (kips/in²)
1	2	Backfill to Grade:	0.0412	0.0606	0.0905	0.0219	-0.0081	0.0000	0.0000	0.0905
1	2	Pave: Pave:	0.0412	-0.0119	0.0180	0.0944	0.0645	0.0000	0.0000	0.0944
1	2	Pave: Pave:	0.0412	-0.0119	0.0180	0.0944	0.0645	0.0000	0.0000	0.0944
1	2	Pave: Pave: PT	0.0412	-0.0119	0.0180	0.0944	0.0645	0.0000	0.0000	0.0944
1	2	Pave: Pave:	0.0412	-0.0120	0.0180	0.0944	0.0645	0.0000	0.0000	0.0944
1	2	Pave: Pave: step	0.0412	-0.0120	0.0180	0.0944	0.0645	0.0000	0.0000	0.0944
1	2	Open Bridge to	0.0412	-0.0120	0.0180	0.0944	0.0645	0.0000	0.0000	0.0944
1	2	Open Bridge to	0.0412	-0.0120	0.0180	0.0944	0.0645	0.0000	0.0000	0.0944
1	2	Open Bridge to	0.0412	-0.0120	0.0180	0.0944	0.0645	0.0000	0.0000	0.0944
1	2	Open Bridge to	0.0412	-0.0120	0.0180	0.0944	0.0645	0.0000	0.0000	0.0944
1	2	Open Bridge to	0.0412	0.0787	0.1086	0.0037	-0.0262	0.0000	0.0000	0.1086
1	2	Open Bridge to	0.0412	0.0606	0.0905	0.0219	-0.0081	0.0000	0.0000	0.0905
1	2	Partial Live Load	0.0412	-0.0120	0.0180	0.0944	0.0645	0.0000	0.0000	0.0944
1	2	Partial Live Load	0.0412	-0.0120	0.0180	0.0944	0.0645	0.0000	0.0000	0.0944
1	2	Partial Live Load	0.0412	-0.0120	0.0180	0.0944	0.0645	0.0000	0.0000	0.0944
1	2	Partial Live Load	0.0412	-0.0119	0.0180	0.0944	0.0645	0.0000	0.0000	0.0944
1	2	Partial Live Load	0.0412	-0.0029	0.0271	0.0853	0.0554	0.0000	0.0000	0.0853
1	2	Remove Long	0.0412	-0.0029	0.0271	0.0853	0.0554	0.0000	0.0000	0.0853
1	2	Remove Long	0.0412	-0.0029	0.0271	0.0853	0.0554	0.0000	0.0000	0.0853
1	2	Remove Long	0.0412	-0.0029	0.0271	0.0853	0.0554	0.0000	0.0000	0.0853
1	2	Remove Long	0.0395	0.0099	0.0366	0.0690	0.0423	0.0000	0.0000	0.0690
1	2	Remove Long	0.0395	0.0008	0.0276	0.0781	0.0513	0.0000	0.0000	0.0781
1	2	Long Term	0.0395	0.0008	0.0276	0.0781	0.0513	0.0000	0.0000	0.0781
1	2	Long Term	0.0395	0.0008	0.0276	0.0781	0.0513	0.0000	0.0000	0.0781
1	2	Long Term	0.0395	0.0008	0.0276	0.0781	0.0513	0.0000	0.0000	0.0781
1	2	Long Term	0.0394	0.0013	0.0279	0.0774	0.0508	0.0000	0.0000	0.0774
1	2	Long Term	0.0394	0.0739	0.1005	0.0049	-0.0217	0.0000	0.0000	0.1005
1	2	Long Term	0.0394	0.0920	0.1186	-0.0132	-0.0399	0.0000	0.0000	0.1186
1	2	Long Term	0.0394	0.2581	0.2736	-0.1793	-0.1949	0.0000	0.0000	0.2736
1	2	Strength Check:	0.0394	0.0013	0.0279	0.0774	0.0508	0.0000	0.0000	0.0774
1	2	Strength Check:	0.0394	0.0013	0.0279	0.0774	0.0508	0.0000	0.0000	0.0774
1	2	Strength Check:	0.0394	0.0013	0.0279	0.0774	0.0508	0.0000	0.0000	0.0774
1	2	Strength Check:	0.0394	0.0013	0.0279	0.0774	0.0508	0.0000	0.0000	0.0774
1	2	Strength Check:	0.0000	0.2866	0.2423	-0.2866	-0.2423	0.0000	0.0000	0.2866

RESULT : Member Stresses

Member	Station	Result Case	(P/A) @ Centroid (kips/in²)	Normal Stress @ Point 1 (kips/in²)	Normal Stress @ Point 2 (kips/in²)	Normal Stress @ Point 3 (kips/in²)	Normal Stress @ Point 4 (kips/in²)	Normal Stress @ Point 5	Normal Stress @ Point 6	Max ABS Total Stress (kips/in²)
1	2	Strength Check:	0.0394	0.2581	0.2736	-0.1793	-0.1949	0.0000	0.0000	0.2736
2	0	Set Precast In	0.0000	0.0000	0.0000	0.0000	0.0000	0.0000	0.0000	0.0000
2	0	Set Precast In	0.0000	-0.0064	0.0071	0.0065	-0.0070	0.0000	0.0000	0.0071
2	0	Tension PT:	0.0000	-0.0064	0.0071	0.0065	-0.0070	0.0000	0.0000	0.0071
2	0	Tension PT:	0.0000	-0.0064	0.0071	0.0065	-0.0070	0.0000	0.0000	0.0071
2	0	Tension PT:	0.0000	-0.0064	0.0071	0.0065	-0.0070	0.0000	0.0000	0.0071
2	0	Tension PT:	0.0000	-0.0064	0.0071	0.0065	-0.0070	0.0000	0.0000	0.0071
2	0	Tension PT:	-0.0744	-0.1628	-0.1457	0.0140	-0.0032	0.0000	0.0000	-0.1628
2	0	Add	-0.0744	-0.1628	-0.1457	0.0140	-0.0032	0.0000	0.0000	-0.1628
2	0	Add	-0.0744	-0.1628	-0.1457	0.0140	-0.0032	0.0000	0.0000	-0.1628
2	0	Add	-0.0744	-0.1628	-0.1457	0.0140	-0.0032	0.0000	0.0000	-0.1628
2	0	Add	-0.0744	-0.1627	-0.1456	0.0140	-0.0032	0.0000	0.0000	-0.1627
2	0	Add	-0.0744	-0.1627	-0.1456	0.0140	-0.0032	0.0000	0.0000	-0.1627
2	0	Backfill to Grade:	-0.0744	-0.1627	-0.1456	0.0140	-0.0032	0.0000	0.0000	-0.1627
2	0	Backfill to Grade:	-0.0744	-0.1627	-0.1456	0.0140	-0.0032	0.0000	0.0000	-0.1627
2	0	Backfill to Grade:	-0.0744	-0.1627	-0.1456	0.0140	-0.0032	0.0000	0.0000	-0.1627
2	0	Backfill to Grade:	-0.0743	-0.1627	-0.1455	0.0140	-0.0032	0.0000	0.0000	-0.1627
2	0	Backfill to Grade:	-0.0673	-0.0865	-0.0677	-0.0481	-0.0669	0.0000	0.0000	-0.0865
2	0	Backfill to Grade:	-0.0654	-0.0629	-0.0491	-0.0679	-0.0816	0.0000	0.0000	-0.0816
2	0	Pave: Pave:	-0.0673	-0.0865	-0.0677	-0.0481	-0.0669	0.0000	0.0000	-0.0865
2	0	Pave: Pave:	-0.0673	-0.0865	-0.0677	-0.0481	-0.0669	0.0000	0.0000	-0.0865
2	0	Pave: Pave: PT	-0.0673	-0.0865	-0.0677	-0.0481	-0.0669	0.0000	0.0000	-0.0865
2	0	Pave: Pave:	-0.0673	-0.0866	-0.0677	-0.0481	-0.0669	0.0000	0.0000	-0.0866
2	0	Pave: Pave: step	-0.0673	-0.0866	-0.0677	-0.0481	-0.0669	0.0000	0.0000	-0.0866
2	0	Open Bridge to	-0.0673	-0.0866	-0.0677	-0.0481	-0.0669	0.0000	0.0000	-0.0866
2	0	Open Bridge to	-0.0673	-0.0866	-0.0677	-0.0481	-0.0669	0.0000	0.0000	-0.0866
2	0	Open Bridge to	-0.0673	-0.0866	-0.0677	-0.0481	-0.0669	0.0000	0.0000	-0.0866
2	0	Open Bridge to	-0.0673	-0.0865	-0.0677	-0.0481	-0.0669	0.0000	0.0000	-0.0865
2	0	Open Bridge to	-0.0649	-0.0569	-0.0445	-0.0729	-0.0853	0.0000	0.0000	-0.0853
2	0	Open Bridge to	-0.0654	-0.0629	-0.0491	-0.0679	-0.0816	0.0000	0.0000	-0.0816
2	0	Partial Live Load	-0.0673	-0.0865	-0.0677	-0.0481	-0.0669	0.0000	0.0000	-0.0865
2	0	Partial Live Load	-0.0673	-0.0865	-0.0677	-0.0481	-0.0669	0.0000	0.0000	-0.0865
2	0	Partial Live Load	-0.0673	-0.0865	-0.0677	-0.0481	-0.0669	0.0000	0.0000	-0.0865
2	0	Partial Live Load	-0.0673	-0.0865	-0.0677	-0.0481	-0.0669	0.0000	0.0000	-0.0865

RESULT : Member Stresses

Member	Station	Result Case	(P/A) @ Centroid (kips/in²)	Normal Stress @ Point 1 (kips/in²)	Normal Stress @ Point 2 (kips/in²)	Normal Stress @ Point 3 (kips/in²)	Normal Stress @ Point 4 (kips/in²)	Normal Stress @ Point 5	Normal Stress @ Point 6	Max ABS Total Stress (kips/in²)
2	0	Partial Live Load	-0.0671	-0.0836	-0.0654	-0.0506	-0.0688	0.0000	0.0000	-0.0836
2	0	Remove Long	-0.0671	-0.0836	-0.0654	-0.0506	-0.0688	0.0000	0.0000	-0.0836
2	0	Remove Long	-0.0671	-0.0836	-0.0654	-0.0506	-0.0688	0.0000	0.0000	-0.0836
2	0	Remove Long	-0.0671	-0.0836	-0.0654	-0.0506	-0.0688	0.0000	0.0000	-0.0836
2	0	Remove Long	-0.0639	-0.0769	-0.0588	-0.0509	-0.0689	0.0000	0.0000	-0.0769
2	0	Remove Long	-0.0641	-0.0798	-0.0612	-0.0484	-0.0671	0.0000	0.0000	-0.0798
2	0	Long Term	-0.0641	-0.0798	-0.0612	-0.0484	-0.0671	0.0000	0.0000	-0.0798
2	0	Long Term	-0.0641	-0.0798	-0.0612	-0.0484	-0.0671	0.0000	0.0000	-0.0798
2	0	Long Term	-0.0641	-0.0798	-0.0612	-0.0484	-0.0671	0.0000	0.0000	-0.0798
2	0	Long Term	-0.0640	-0.0796	-0.0609	-0.0484	-0.0671	0.0000	0.0000	-0.0796
2	0	Long Term	-0.0621	-0.0559	-0.0423	-0.0682	-0.0818	0.0000	0.0000	-0.0818
2	0	Long Term	-0.0616	-0.0500	-0.0377	-0.0732	-0.0855	0.0000	0.0000	-0.0855
2	0	Long Term	-0.0573	-0.0027	0.0088	-0.1119	-0.1234	0.0000	0.0000	-0.1234
2	0	Strength Check:	-0.0640	-0.0796	-0.0609	-0.0484	-0.0671	0.0000	0.0000	-0.0796
2	0	Strength Check:	-0.0640	-0.0796	-0.0609	-0.0484	-0.0671	0.0000	0.0000	-0.0796
2	0	Strength Check:	-0.0640	-0.0796	-0.0609	-0.0484	-0.0671	0.0000	0.0000	-0.0796
2	0	Strength Check:	-0.0640	-0.0796	-0.0609	-0.0484	-0.0671	0.0000	0.0000	-0.0796
2	0	Strength Check:	0.0071	0.0698	0.0849	-0.0556	-0.0708	0.0000	0.0000	0.0849
2	0	Strength Check:	-0.0573	-0.0027	0.0088	-0.1119	-0.1234	0.0000	0.0000	-0.1234
2	1	Set Precast In	0.0000	0.0000	0.0000	0.0000	0.0000	0.0000	0.0000	0.0000
2	1	Set Precast In	0.0001	0.0014	-0.0007	-0.0013	0.0008	0.0000	0.0000	0.0014
2	1	Tension PT:	0.0001	0.0014	-0.0007	-0.0013	0.0008	0.0000	0.0000	0.0014
2	1	Tension PT:	0.0001	0.0014	-0.0007	-0.0013	0.0008	0.0000	0.0000	0.0014
2	1	Tension PT:	0.0001	0.0014	-0.0007	-0.0013	0.0008	0.0000	0.0000	0.0014
2	1	Tension PT:	0.0001	0.0014	-0.0007	-0.0013	0.0008	0.0000	0.0000	0.0014
2	1	Tension PT:	-0.0743	-0.1539	-0.1535	0.0054	0.0050	0.0000	0.0000	-0.1539
2	1	Add	-0.0743	-0.1539	-0.1535	0.0054	0.0050	0.0000	0.0000	-0.1539
2	1	Add	-0.0743	-0.1539	-0.1535	0.0054	0.0050	0.0000	0.0000	-0.1539
2	1	Add	-0.0743	-0.1539	-0.1535	0.0054	0.0050	0.0000	0.0000	-0.1539
2	1	Add	-0.0742	-0.1538	-0.1535	0.0054	0.0050	0.0000	0.0000	-0.1538
2	1	Add	-0.0742	-0.1521	-0.1552	0.0037	0.0068	0.0000	0.0000	-0.1552
2	1	Backfill to Grade:	-0.0742	-0.1521	-0.1552	0.0037	0.0068	0.0000	0.0000	-0.1552
2	1	Backfill to Grade:	-0.0742	-0.1521	-0.1552	0.0037	0.0068	0.0000	0.0000	-0.1552
2	1	Backfill to Grade:	-0.0742	-0.1521	-0.1552	0.0037	0.0068	0.0000	0.0000	-0.1552

RESULT : Member Stresses

Member	Station	Result Case	(P/A) @ Centroid (kips/in²)	Normal Stress @ Point 1 (kips/in²)	Normal Stress @ Point 2 (kips/in²)	Normal Stress @ Point 3 (kips/in²)	Normal Stress @ Point 4 (kips/in²)	Normal Stress @ Point 5	Normal Stress @ Point 6	Max ABS Total Stress (kips/in²)
2	1	Backfill to Grade:	-0.0742	-0.1520	-0.1551	0.0037	0.0068	0.0000	0.0000	-0.1551
2	1	Backfill to Grade:	-0.0672	-0.0789	-0.0803	-0.0554	-0.0540	0.0000	0.0000	-0.0803
2	1	Backfill to Grade:	-0.0652	-0.0559	-0.0623	-0.0745	-0.0681	0.0000	0.0000	-0.0745
2	1	Pave: Pave:	-0.0672	-0.0789	-0.0803	-0.0554	-0.0540	0.0000	0.0000	-0.0803
2	1	Pave: Pave:	-0.0672	-0.0789	-0.0803	-0.0554	-0.0540	0.0000	0.0000	-0.0803
2	1	Pave: Pave: PT	-0.0672	-0.0789	-0.0803	-0.0554	-0.0540	0.0000	0.0000	-0.0803
2	1	Pave: Pave:	-0.0672	-0.0789	-0.0803	-0.0554	-0.0541	0.0000	0.0000	-0.0803
2	1	Pave: Pave: step	-0.0672	-0.0787	-0.0805	-0.0557	-0.0538	0.0000	0.0000	-0.0805
2	1	Open Bridge to	-0.0672	-0.0787	-0.0805	-0.0557	-0.0538	0.0000	0.0000	-0.0805
2	1	Open Bridge to	-0.0672	-0.0787	-0.0805	-0.0557	-0.0538	0.0000	0.0000	-0.0805
2	1	Open Bridge to	-0.0672	-0.0787	-0.0805	-0.0557	-0.0538	0.0000	0.0000	-0.0805
2	1	Open Bridge to	-0.0672	-0.0787	-0.0805	-0.0557	-0.0538	0.0000	0.0000	-0.0805
2	1	Open Bridge to	-0.0647	-0.0487	-0.0593	-0.0808	-0.0702	0.0000	0.0000	-0.0808
2	1	Open Bridge to	-0.0652	-0.0547	-0.0635	-0.0757	-0.0669	0.0000	0.0000	-0.0757
2	1	Partial Live Load	-0.0672	-0.0787	-0.0805	-0.0557	-0.0538	0.0000	0.0000	-0.0805
2	1	Partial Live Load	-0.0672	-0.0787	-0.0805	-0.0557	-0.0538	0.0000	0.0000	-0.0805
2	1	Partial Live Load	-0.0672	-0.0787	-0.0805	-0.0557	-0.0538	0.0000	0.0000	-0.0805
2	1	Partial Live Load	-0.0672	-0.0787	-0.0805	-0.0557	-0.0538	0.0000	0.0000	-0.0805
2	1	Partial Live Load	-0.0669	-0.0757	-0.0784	-0.0582	-0.0554	0.0000	0.0000	-0.0784
2	1	Remove Long	-0.0669	-0.0757	-0.0784	-0.0582	-0.0554	0.0000	0.0000	-0.0784
2	1	Remove Long	-0.0669	-0.0757	-0.0784	-0.0582	-0.0554	0.0000	0.0000	-0.0784
2	1	Remove Long	-0.0669	-0.0757	-0.0784	-0.0582	-0.0554	0.0000	0.0000	-0.0784
2	1	Remove Long	-0.0638	-0.0690	-0.0718	-0.0585	-0.0557	0.0000	0.0000	-0.0718
2	1	Remove Long	-0.0640	-0.0720	-0.0740	-0.0560	-0.0540	0.0000	0.0000	-0.0740
2	1	Long Term	-0.0640	-0.0720	-0.0740	-0.0560	-0.0540	0.0000	0.0000	-0.0740
2	1	Long Term	-0.0640	-0.0720	-0.0740	-0.0560	-0.0540	0.0000	0.0000	-0.0740
2	1	Long Term	-0.0640	-0.0720	-0.0740	-0.0560	-0.0540	0.0000	0.0000	-0.0740
2	1	Long Term	-0.0639	-0.0717	-0.0737	-0.0560	-0.0540	0.0000	0.0000	-0.0737
2	1	Long Term	-0.0619	-0.0478	-0.0567	-0.0761	-0.0671	0.0000	0.0000	-0.0761
2	1	Long Term	-0.0614	-0.0418	-0.0525	-0.0811	-0.0704	0.0000	0.0000	-0.0811
2	1	Long Term	-0.0571	0.0045	-0.0137	-0.1188	-0.1006	0.0000	0.0000	-0.1188
2	1	Strength Check:	-0.0639	-0.0717	-0.0737	-0.0560	-0.0540	0.0000	0.0000	-0.0737
2	1	Strength Check:	-0.0639	-0.0717	-0.0737	-0.0560	-0.0540	0.0000	0.0000	-0.0737
2	1	Strength Check:	-0.0639	-0.0717	-0.0737	-0.0560	-0.0540	0.0000	0.0000	-0.0737

RESULT : Member Stresses

Member	Station	Result Case	(P/A) @ Centroid (kips/in²)	Normal Stress @ Point 1 (kips/in²)	Normal Stress @ Point 2 (kips/in²)	Normal Stress @ Point 3 (kips/in²)	Normal Stress @ Point 4 (kips/in²)	Normal Stress @ Point 5	Normal Stress @ Point 6	Max ABS Total Stress (kips/in²)
2	1	Strength Check:	-0.0639	-0.0717	-0.0737	-0.0560	-0.0540	0.0000	0.0000	-0.0737
2	1	Strength Check:	0.0071	0.0765	0.0722	-0.0623	-0.0580	0.0000	0.0000	0.0765
2	1	Strength Check:	-0.0571	0.0045	-0.0137	-0.1188	-0.1006	0.0000	0.0000	-0.1188
2	2	Set Precast In	0.0000	0.0000	0.0000	0.0000	0.0000	0.0000	0.0000	0.0000
2	2	Set Precast In	0.0001	0.0110	-0.0103	-0.0109	0.0104	0.0000	0.0000	0.0110
2	2	Tension PT:	0.0001	0.0110	-0.0103	-0.0109	0.0104	0.0000	0.0000	0.0110
2	2	Tension PT:	0.0001	0.0110	-0.0103	-0.0109	0.0104	0.0000	0.0000	0.0110
2	2	Tension PT:	0.0001	0.0110	-0.0103	-0.0109	0.0104	0.0000	0.0000	0.0110
2	2	Tension PT:	0.0001	0.0110	-0.0103	-0.0109	0.0104	0.0000	0.0000	0.0110
2	2	Tension PT:	-0.0743	-0.1438	-0.1639	-0.0048	0.0153	0.0000	0.0000	-0.1639
2	2	Add	-0.0743	-0.1438	-0.1639	-0.0048	0.0153	0.0000	0.0000	-0.1639
2	2	Add	-0.0743	-0.1438	-0.1639	-0.0048	0.0153	0.0000	0.0000	-0.1639
2	2	Add	-0.0743	-0.1438	-0.1639	-0.0048	0.0153	0.0000	0.0000	-0.1639
2	2	Add	-0.0743	-0.1437	-0.1638	-0.0048	0.0152	0.0000	0.0000	-0.1638
2	2	Add	-0.0742	-0.1368	-0.1707	-0.0117	0.0222	0.0000	0.0000	-0.1707
2	2	Backfill to Grade:	-0.0742	-0.1368	-0.1707	-0.0117	0.0222	0.0000	0.0000	-0.1707
2	2	Backfill to Grade:	-0.0742	-0.1368	-0.1707	-0.0117	0.0222	0.0000	0.0000	-0.1707
2	2	Backfill to Grade:	-0.0742	-0.1368	-0.1707	-0.0117	0.0222	0.0000	0.0000	-0.1707
2	2	Backfill to Grade:	-0.0742	-0.1367	-0.1706	-0.0117	0.0222	0.0000	0.0000	-0.1706
2	2	Backfill to Grade:	-0.0672	-0.0380	-0.0700	-0.0964	-0.0644	0.0000	0.0000	-0.0964
2	2	Backfill to Grade:	-0.0653	-0.0068	-0.0439	-0.1238	-0.0867	0.0000	0.0000	-0.1238
2	2	Pave: Pave:	-0.0672	-0.0380	-0.0700	-0.0964	-0.0644	0.0000	0.0000	-0.0964
2	2	Pave: Pave:	-0.0672	-0.0380	-0.0700	-0.0964	-0.0644	0.0000	0.0000	-0.0964
2	2	Pave: Pave: PT	-0.0672	-0.0380	-0.0700	-0.0964	-0.0644	0.0000	0.0000	-0.0964
2	2	Pave: Pave:	-0.0672	-0.0380	-0.0701	-0.0964	-0.0644	0.0000	0.0000	-0.0964
2	2	Pave: Pave: step	-0.0672	-0.0370	-0.0711	-0.0974	-0.0633	0.0000	0.0000	-0.0974
2	2	Open Bridge to	-0.0672	-0.0370	-0.0711	-0.0974	-0.0633	0.0000	0.0000	-0.0974
2	2	Open Bridge to	-0.0672	-0.0370	-0.0711	-0.0974	-0.0633	0.0000	0.0000	-0.0974
2	2	Open Bridge to	-0.0672	-0.0370	-0.0711	-0.0974	-0.0633	0.0000	0.0000	-0.0974
2	2	Open Bridge to	-0.0672	-0.0370	-0.0711	-0.0975	-0.0633	0.0000	0.0000	-0.0975
2	2	Open Bridge to	-0.0648	0.0068	-0.0431	-0.1363	-0.0865	0.0000	0.0000	-0.1363
2	2	Open Bridge to	-0.0653	-0.0020	-0.0487	-0.1286	-0.0819	0.0000	0.0000	-0.1286
2	2	Partial Live Load	-0.0672	-0.0370	-0.0711	-0.0975	-0.0633	0.0000	0.0000	-0.0975
2	2	Partial Live Load	-0.0672	-0.0370	-0.0711	-0.0975	-0.0633	0.0000	0.0000	-0.0975

RESULT : Member Stresses

Member	Station	Result Case	(P/A) @ Centroid (kips/in²)	Normal Stress @ Point 1 (kips/in²)	Normal Stress @ Point 2 (kips/in²)	Normal Stress @ Point 3 (kips/in²)	Normal Stress @ Point 4 (kips/in²)	Normal Stress @ Point 5	Normal Stress @ Point 6	Max ABS Total Stress (kips/in²)
2	2	Partial Live Load	-0.0672	-0.0370	-0.0711	-0.0975	-0.0633	0.0000	0.0000	-0.0975
2	2	Partial Live Load	-0.0672	-0.0370	-0.0711	-0.0975	-0.0633	0.0000	0.0000	-0.0975
2	2	Partial Live Load	-0.0670	-0.0326	-0.0683	-0.1013	-0.0657	0.0000	0.0000	-0.1013
2	2	Remove Long	-0.0670	-0.0326	-0.0683	-0.1013	-0.0657	0.0000	0.0000	-0.1013
2	2	Remove Long	-0.0670	-0.0326	-0.0683	-0.1013	-0.0657	0.0000	0.0000	-0.1013
2	2	Remove Long	-0.0670	-0.0326	-0.0683	-0.1013	-0.0657	0.0000	0.0000	-0.1013
2	2	Remove Long	-0.0639	-0.0262	-0.0619	-0.1016	-0.0659	0.0000	0.0000	-0.1016
2	2	Remove Long	-0.0641	-0.0305	-0.0647	-0.0977	-0.0635	0.0000	0.0000	-0.0977
2	2	Long Term	-0.0641	-0.0305	-0.0647	-0.0977	-0.0635	0.0000	0.0000	-0.0977
2	2	Long Term	-0.0641	-0.0305	-0.0647	-0.0977	-0.0635	0.0000	0.0000	-0.0977
2	2	Long Term	-0.0641	-0.0305	-0.0647	-0.0977	-0.0635	0.0000	0.0000	-0.0977
2	2	Long Term	-0.0639	-0.0302	-0.0643	-0.0977	-0.0636	0.0000	0.0000	-0.0977
2	2	Long Term	-0.0620	0.0048	-0.0419	-0.1288	-0.0821	0.0000	0.0000	-0.1288
2	2	Long Term	-0.0615	0.0136	-0.0363	-0.1366	-0.0867	0.0000	0.0000	-0.1366
2	2	Long Term	-0.0572	0.0623	-0.0086	-0.1768	-0.1059	0.0000	0.0000	-0.1768
2	2	Strength Check:	-0.0639	-0.0302	-0.0643	-0.0977	-0.0636	0.0000	0.0000	-0.0977
2	2	Strength Check:	-0.0639	-0.0302	-0.0643	-0.0977	-0.0636	0.0000	0.0000	-0.0977
2	2	Strength Check:	-0.0639	-0.0302	-0.0643	-0.0977	-0.0636	0.0000	0.0000	-0.0977
2	2	Strength Check:	-0.0639	-0.0302	-0.0643	-0.0977	-0.0636	0.0000	0.0000	-0.0977
2	2	Strength Check:	0.0071	0.1177	0.0824	-0.1035	-0.0682	0.0000	0.0000	0.1177
2	2	Strength Check:	-0.0572	0.0623	-0.0086	-0.1768	-0.1059	0.0000	0.0000	-0.1768
3	0	Set Precast In	0.0000	0.0000	0.0000	0.0000	0.0000	0.0000	0.0000	0.0000
3	0	Set Precast In	0.0000	0.0106	-0.0107	-0.0107	0.0106	0.0000	0.0000	-0.0107
3	0	Tension PT:	0.0000	0.0106	-0.0107	-0.0107	0.0106	0.0000	0.0000	-0.0107
3	0	Tension PT:	0.0000	0.0106	-0.0107	-0.0107	0.0106	0.0000	0.0000	-0.0107
3	0	Tension PT:	0.0000	0.0106	-0.0107	-0.0107	0.0106	0.0000	0.0000	-0.0107
3	0	Tension PT:	0.0000	0.0106	-0.0107	-0.0107	0.0106	0.0000	0.0000	-0.0107
3	0	Tension PT:	-0.0744	-0.1442	-0.1643	-0.0046	0.0154	0.0000	0.0000	-0.1643
3	0	Add	-0.0744	-0.1442	-0.1643	-0.0046	0.0154	0.0000	0.0000	-0.1643
3	0	Add	-0.0744	-0.1442	-0.1643	-0.0046	0.0154	0.0000	0.0000	-0.1643
3	0	Add	-0.0744	-0.1442	-0.1643	-0.0046	0.0154	0.0000	0.0000	-0.1643
3	0	Add	-0.0744	-0.1442	-0.1642	-0.0046	0.0154	0.0000	0.0000	-0.1642
3	0	Add	-0.0744	-0.1373	-0.1712	-0.0116	0.0223	0.0000	0.0000	-0.1712
3	0	Backfill to Grade:	-0.0745	-0.1373	-0.1712	-0.0116	0.0223	0.0000	0.0000	-0.1712

RESULT : Member Stresses

Member	Station	Result Case	(P/A) @ Centroid (kips/in²)	Normal Stress @ Point 1 (kips/in²)	Normal Stress @ Point 2 (kips/in²)	Normal Stress @ Point 3 (kips/in²)	Normal Stress @ Point 4 (kips/in²)	Normal Stress @ Point 5	Normal Stress @ Point 6	Max ABS Total Stress (kips/in²)
3	0	Backfill to Grade:	-0.0745	-0.1373	-0.1712	-0.0116	0.0223	0.0000	0.0000	-0.1712
3	0	Backfill to Grade:	-0.0745	-0.1373	-0.1712	-0.0116	0.0223	0.0000	0.0000	-0.1712
3	0	Backfill to Grade:	-0.0744	-0.1372	-0.1711	-0.0116	0.0223	0.0000	0.0000	-0.1711
3	0	Backfill to Grade:	-0.0674	-0.0390	-0.0711	-0.0958	-0.0638	0.0000	0.0000	-0.0958
3	0	Backfill to Grade:	-0.0655	-0.0079	-0.0449	-0.1231	-0.0861	0.0000	0.0000	-0.1231
3	0	Pave: Pave:	-0.0674	-0.0390	-0.0711	-0.0958	-0.0638	0.0000	0.0000	-0.0958
3	0	Pave: Pave:	-0.0674	-0.0390	-0.0711	-0.0958	-0.0638	0.0000	0.0000	-0.0958
3	0	Pave: Pave: PT	-0.0674	-0.0390	-0.0711	-0.0958	-0.0638	0.0000	0.0000	-0.0958
3	0	Pave: Pave:	-0.0674	-0.0391	-0.0711	-0.0958	-0.0638	0.0000	0.0000	-0.0958
3	0	Pave: Pave: step	-0.0674	-0.0380	-0.0721	-0.0968	-0.0627	0.0000	0.0000	-0.0968
3	0	Open Bridge to	-0.0674	-0.0380	-0.0721	-0.0968	-0.0627	0.0000	0.0000	-0.0968
3	0	Open Bridge to	-0.0674	-0.0380	-0.0721	-0.0968	-0.0627	0.0000	0.0000	-0.0968
3	0	Open Bridge to	-0.0674	-0.0380	-0.0721	-0.0968	-0.0627	0.0000	0.0000	-0.0968
3	0	Open Bridge to	-0.0674	-0.0380	-0.0721	-0.0968	-0.0627	0.0000	0.0000	-0.0968
3	0	Open Bridge to	-0.0651	0.0056	-0.0442	-0.1358	-0.0859	0.0000	0.0000	-0.1358
3	0	Open Bridge to	-0.0656	-0.0031	-0.0498	-0.1280	-0.0813	0.0000	0.0000	-0.1280
3	0	Partial Live Load	-0.0674	-0.0380	-0.0721	-0.0968	-0.0627	0.0000	0.0000	-0.0968
3	0	Partial Live Load	-0.0674	-0.0380	-0.0721	-0.0968	-0.0627	0.0000	0.0000	-0.0968
3	0	Partial Live Load	-0.0674	-0.0380	-0.0721	-0.0968	-0.0627	0.0000	0.0000	-0.0968
3	0	Partial Live Load	-0.0674	-0.0380	-0.0721	-0.0968	-0.0627	0.0000	0.0000	-0.0968
3	0	Partial Live Load	-0.0672	-0.0337	-0.0693	-0.1007	-0.0651	0.0000	0.0000	-0.1007
3	0	Remove Long	-0.0672	-0.0337	-0.0693	-0.1007	-0.0651	0.0000	0.0000	-0.1007
3	0	Remove Long	-0.0672	-0.0337	-0.0693	-0.1007	-0.0651	0.0000	0.0000	-0.1007
3	0	Remove Long	-0.0672	-0.0337	-0.0693	-0.1007	-0.0651	0.0000	0.0000	-0.1007
3	0	Remove Long	-0.0641	-0.0272	-0.0629	-0.1010	-0.0653	0.0000	0.0000	-0.1010
3	0	Remove Long	-0.0643	-0.0316	-0.0657	-0.0971	-0.0629	0.0000	0.0000	-0.0971
3	0	Long Term	-0.0643	-0.0316	-0.0657	-0.0971	-0.0629	0.0000	0.0000	-0.0971
3	0	Long Term	-0.0643	-0.0316	-0.0657	-0.0971	-0.0629	0.0000	0.0000	-0.0971
3	0	Long Term	-0.0643	-0.0316	-0.0657	-0.0971	-0.0629	0.0000	0.0000	-0.0971
3	0	Long Term	-0.0642	-0.0312	-0.0654	-0.0971	-0.0630	0.0000	0.0000	-0.0971
3	0	Long Term	-0.0623	0.0037	-0.0431	-0.1283	-0.0815	0.0000	0.0000	-0.1283
3	0	Long Term	-0.0618	0.0124	-0.0375	-0.1361	-0.0861	0.0000	0.0000	-0.1361
3	0	Long Term	-0.0576	0.0610	-0.0099	-0.1762	-0.1054	0.0000	0.0000	-0.1762
3	0	Strength Check:	-0.0642	-0.0312	-0.0654	-0.0971	-0.0630	0.0000	0.0000	-0.0971

RESULT : Member Stresses

Member	Station	Result Case	(P/A) @ Centroid (kips/in²)	Normal Stress @ Point 1 (kips/in²)	Normal Stress @ Point 2 (kips/in²)	Normal Stress @ Point 3 (kips/in²)	Normal Stress @ Point 4 (kips/in²)	Normal Stress @ Point 5	Normal Stress @ Point 6	Max ABS Total Stress (kips/in²)
3	0	Strength Check:	-0.0642	-0.0312	-0.0654	-0.0971	-0.0630	0.0000	0.0000	-0.0971
3	0	Strength Check:	-0.0642	-0.0312	-0.0654	-0.0971	-0.0630	0.0000	0.0000	-0.0971
3	0	Strength Check:	-0.0642	-0.0312	-0.0654	-0.0971	-0.0630	0.0000	0.0000	-0.0971
3	0	Strength Check:	0.0069	0.1167	0.0813	-0.1029	-0.0676	0.0000	0.0000	0.1167
3	0	Strength Check:	-0.0576	0.0610	-0.0099	-0.1762	-0.1054	0.0000	0.0000	-0.1762
3	1	Set Precast In	0.0000	0.0000	0.0000	0.0000	0.0000	0.0000	0.0000	0.0000
3	1	Set Precast In	0.0000	0.0011	-0.0011	-0.0011	0.0011	0.0000	0.0000	-0.0011
3	1	Tension PT:	0.0000	0.0007	-0.0007	-0.0007	0.0007	0.0000	0.0000	-0.0007
3	1	Tension PT:	0.0000	0.0007	-0.0007	-0.0007	0.0007	0.0000	0.0000	-0.0007
3	1	Tension PT:	0.0000	0.0007	-0.0007	-0.0007	0.0007	0.0000	0.0000	-0.0007
3	1	Tension PT:	0.0000	0.0007	-0.0007	-0.0007	0.0007	0.0000	0.0000	-0.0007
3	1	Tension PT:	-0.0742	-0.1054	-0.1062	-0.0430	-0.0422	0.0000	0.0000	-0.1062
3	1	Add	-0.0742	-0.1054	-0.1062	-0.0430	-0.0422	0.0000	0.0000	-0.1062
3	1	Add	-0.0742	-0.1054	-0.1062	-0.0430	-0.0422	0.0000	0.0000	-0.1062
3	1	Add	-0.0742	-0.1054	-0.1062	-0.0430	-0.0422	0.0000	0.0000	-0.1062
3	1	Add	-0.0742	-0.1054	-0.1061	-0.0430	-0.0422	0.0000	0.0000	-0.1061
3	1	Add	-0.0742	-0.1099	-0.1016	-0.0384	-0.0467	0.0000	0.0000	-0.1099
3	1	Backfill to Grade:	-0.0742	-0.1107	-0.1008	-0.0376	-0.0475	0.0000	0.0000	-0.1107
3	1	Backfill to Grade:	-0.0742	-0.1107	-0.1008	-0.0376	-0.0475	0.0000	0.0000	-0.1107
3	1	Backfill to Grade:	-0.0742	-0.1107	-0.1008	-0.0376	-0.0475	0.0000	0.0000	-0.1107
3	1	Backfill to Grade:	-0.0741	-0.1107	-0.1007	-0.0376	-0.0475	0.0000	0.0000	-0.1107
3	1	Backfill to Grade:	-0.0672	-0.1462	-0.1352	0.0118	0.0009	0.0000	0.0000	-0.1462
3	1	Backfill to Grade:	-0.0653	-0.1567	-0.1484	0.0261	0.0178	0.0000	0.0000	-0.1567
3	1	Pave: Pave:	-0.0672	-0.1522	-0.1413	0.0179	0.0069	0.0000	0.0000	-0.1522
3	1	Pave: Pave:	-0.0672	-0.1522	-0.1413	0.0179	0.0069	0.0000	0.0000	-0.1522
3	1	Pave: Pave: PT	-0.0672	-0.1522	-0.1413	0.0179	0.0069	0.0000	0.0000	-0.1522
3	1	Pave: Pave:	-0.0672	-0.1523	-0.1413	0.0179	0.0069	0.0000	0.0000	-0.1523
3	1	Pave: Pave: step	-0.0672	-0.1529	-0.1406	0.0185	0.0062	0.0000	0.0000	-0.1529
3	1	Open Bridge to	-0.0672	-0.1541	-0.1416	0.0197	0.0072	0.0000	0.0000	-0.1541
3	1	Open Bridge to	-0.0672	-0.1541	-0.1416	0.0197	0.0072	0.0000	0.0000	-0.1541
3	1	Open Bridge to	-0.0672	-0.1541	-0.1416	0.0197	0.0072	0.0000	0.0000	-0.1541
3	1	Open Bridge to	-0.0672	-0.1541	-0.1416	0.0197	0.0072	0.0000	0.0000	-0.1541
3	1	Open Bridge to	-0.0648	-0.1703	-0.1549	0.0407	0.0252	0.0000	0.0000	-0.1703
3	1	Open Bridge to	-0.0653	-0.1671	-0.1522	0.0365	0.0216	0.0000	0.0000	-0.1671

RESULT : Member Stresses

Member	Station	Result Case	(P/A) @ Centroid (kips/in²)	Normal Stress @ Point 1 (kips/in²)	Normal Stress @ Point 2 (kips/in²)	Normal Stress @ Point 3 (kips/in²)	Normal Stress @ Point 4 (kips/in²)	Normal Stress @ Point 5	Normal Stress @ Point 6	Max ABS Total Stress (kips/in²)
3	1	Partial Live Load	-0.0672	-0.1548	-0.1423	0.0204	0.0079	0.0000	0.0000	-0.1548
3	1	Partial Live Load	-0.0672	-0.1548	-0.1423	0.0204	0.0079	0.0000	0.0000	-0.1548
3	1	Partial Live Load	-0.0672	-0.1548	-0.1423	0.0204	0.0079	0.0000	0.0000	-0.1548
3	1	Partial Live Load	-0.0672	-0.1548	-0.1423	0.0204	0.0079	0.0000	0.0000	-0.1548
3	1	Partial Live Load	-0.0669	-0.1564	-0.1436	0.0225	0.0097	0.0000	0.0000	-0.1564
3	1	Remove Long	-0.0670	-0.1971	-0.1766	0.0632	0.0427	0.0000	0.0000	-0.1971
3	1	Remove Long	-0.0670	-0.1971	-0.1766	0.0632	0.0427	0.0000	0.0000	-0.1971
3	1	Remove Long	-0.0670	-0.1971	-0.1766	0.0632	0.0427	0.0000	0.0000	-0.1971
3	1	Remove Long	-0.0639	-0.1927	-0.1722	0.0649	0.0445	0.0000	0.0000	-0.1927
3	1	Remove Long	-0.0641	-0.1911	-0.1709	0.0628	0.0427	0.0000	0.0000	-0.1911
3	1	Long Term	-0.0641	-0.1904	-0.1704	0.0621	0.0421	0.0000	0.0000	-0.1904
3	1	Long Term	-0.0641	-0.1904	-0.1704	0.0621	0.0421	0.0000	0.0000	-0.1904
3	1	Long Term	-0.0641	-0.1904	-0.1704	0.0621	0.0421	0.0000	0.0000	-0.1904
3	1	Long Term	-0.0639	-0.1901	-0.1701	0.0622	0.0422	0.0000	0.0000	-0.1901
3	1	Long Term	-0.0620	-0.2031	-0.1807	0.0790	0.0567	0.0000	0.0000	-0.2031
3	1	Long Term	-0.0616	-0.2064	-0.1834	0.0832	0.0603	0.0000	0.0000	-0.2064
3	1	Long Term	-0.0574	-0.1914	-0.1634	0.0767	0.0487	0.0000	0.0000	-0.1914
3	1	Strength Check:	-0.0639	-0.1901	-0.1701	0.0622	0.0422	0.0000	0.0000	-0.1901
3	1	Strength Check:	-0.0639	-0.1901	-0.1701	0.0622	0.0422	0.0000	0.0000	-0.1901
3	1	Strength Check:	-0.0639	-0.1901	-0.1701	0.0622	0.0422	0.0000	0.0000	-0.1901
3	1	Strength Check:	-0.0639	-0.1901	-0.1701	0.0622	0.0422	0.0000	0.0000	-0.1901
3	1	Strength Check:	0.0069	-0.0888	-0.0693	0.1026	0.0832	0.0000	0.0000	0.1026
3	1	Strength Check:	-0.0574	-0.1914	-0.1634	0.0767	0.0487	0.0000	0.0000	-0.1914
3	2	Set Precast In	0.0000	0.0000	0.0000	0.0000	0.0000	0.0000	0.0000	0.0000
3	2	Set Precast In	0.0000	0.0047	-0.0047	-0.0047	0.0047	0.0000	0.0000	0.0047
3	2	Tension PT:	0.0000	0.0040	-0.0040	-0.0040	0.0040	0.0000	0.0000	0.0040
3	2	Tension PT:	0.0000	0.0040	-0.0040	-0.0040	0.0040	0.0000	0.0000	0.0040
3	2	Tension PT:	0.0000	0.0040	-0.0040	-0.0040	0.0040	0.0000	0.0000	0.0040
3	2	Tension PT:	0.0000	0.0040	-0.0040	-0.0040	0.0040	0.0000	0.0000	0.0040
3	2	Tension PT:	-0.0729	-0.0521	-0.0601	-0.0937	-0.0858	0.0000	0.0000	-0.0937
3	2	Add	-0.0729	-0.0522	-0.0601	-0.0937	-0.0858	0.0000	0.0000	-0.0937
3	2	Add	-0.0729	-0.0522	-0.0601	-0.0937	-0.0858	0.0000	0.0000	-0.0937
3	2	Add	-0.0729	-0.0522	-0.0601	-0.0937	-0.0858	0.0000	0.0000	-0.0937
3	2	Add	-0.0729	-0.0522	-0.0600	-0.0936	-0.0857	0.0000	0.0000	-0.0936

RESULT : Member Stresses

Member	Station	Result Case	(P/A) @ Centroid (kips/in²)	Normal Stress @ Point 1 (kips/in²)	Normal Stress @ Point 2 (kips/in²)	Normal Stress @ Point 3 (kips/in²)	Normal Stress @ Point 4 (kips/in²)	Normal Stress @ Point 5	Normal Stress @ Point 6	Max ABS Total Stress (kips/in²)
3	2	Add	-0.0728	-0.0443	-0.0678	-0.1013	-0.0779	0.0000	0.0000	-0.1013
3	2	Backfill to Grade:	-0.0728	-0.0460	-0.0661	-0.0996	-0.0795	0.0000	0.0000	-0.0996
3	2	Backfill to Grade:	-0.0728	-0.0460	-0.0661	-0.0996	-0.0795	0.0000	0.0000	-0.0996
3	2	Backfill to Grade:	-0.0728	-0.0460	-0.0661	-0.0996	-0.0795	0.0000	0.0000	-0.0996
3	2	Backfill to Grade:	-0.0728	-0.0460	-0.0661	-0.0996	-0.0795	0.0000	0.0000	-0.0996
3	2	Backfill to Grade:	-0.0659	0.0109	-0.0091	-0.1426	-0.1227	0.0000	0.0000	-0.1426
3	2	Backfill to Grade:	-0.0640	0.0288	0.0086	-0.1568	-0.1366	0.0000	0.0000	-0.1568
3	2	Pave: Pave:	-0.0659	-0.0012	-0.0210	-0.1306	-0.1107	0.0000	0.0000	-0.1306
3	2	Pave: Pave:	-0.0659	-0.0012	-0.0210	-0.1306	-0.1107	0.0000	0.0000	-0.1306
3	2	Pave: Pave: PT	-0.0659	-0.0012	-0.0210	-0.1306	-0.1107	0.0000	0.0000	-0.1306
3	2	Pave: Pave:	-0.0659	-0.0012	-0.0211	-0.1306	-0.1108	0.0000	0.0000	-0.1306
3	2	Pave: Pave: step	-0.0659	0.0000	-0.0222	-0.1318	-0.1096	0.0000	0.0000	-0.1318
3	2	Open Bridge to	-0.0659	-0.0023	-0.0241	-0.1295	-0.1077	0.0000	0.0000	-0.1295
3	2	Open Bridge to	-0.0659	-0.0023	-0.0241	-0.1295	-0.1077	0.0000	0.0000	-0.1295
3	2	Open Bridge to	-0.0659	-0.0023	-0.0241	-0.1295	-0.1077	0.0000	0.0000	-0.1295
3	2	Open Bridge to	-0.0659	-0.0023	-0.0241	-0.1295	-0.1077	0.0000	0.0000	-0.1295
3	2	Open Bridge to	-0.0635	0.0255	-0.0073	-0.1525	-0.1197	0.0000	0.0000	-0.1525
3	2	Open Bridge to	-0.0640	0.0199	-0.0107	-0.1479	-0.1173	0.0000	0.0000	-0.1479
3	2	Partial Live Load	-0.0659	-0.0038	-0.0255	-0.1280	-0.1063	0.0000	0.0000	-0.1280
3	2	Partial Live Load	-0.0659	-0.0038	-0.0255	-0.1280	-0.1063	0.0000	0.0000	-0.1280
3	2	Partial Live Load	-0.0659	-0.0038	-0.0255	-0.1280	-0.1063	0.0000	0.0000	-0.1280
3	2	Partial Live Load	-0.0659	-0.0038	-0.0255	-0.1280	-0.1063	0.0000	0.0000	-0.1280
3	2	Partial Live Load	-0.0657	-0.0010	-0.0238	-0.1303	-0.1075	0.0000	0.0000	-0.1303
3	2	Remove Long	-0.0657	-0.0817	-0.0894	-0.0496	-0.0419	0.0000	0.0000	-0.0894
3	2	Remove Long	-0.0657	-0.0817	-0.0894	-0.0496	-0.0419	0.0000	0.0000	-0.0894
3	2	Remove Long	-0.0657	-0.0817	-0.0894	-0.0496	-0.0419	0.0000	0.0000	-0.0894
3	2	Remove Long	-0.0626	-0.0793	-0.0871	-0.0459	-0.0382	0.0000	0.0000	-0.0871
3	2	Remove Long	-0.0628	-0.0821	-0.0887	-0.0436	-0.0370	0.0000	0.0000	-0.0887
3	2	Long Term	-0.0628	-0.0807	-0.0876	-0.0450	-0.0381	0.0000	0.0000	-0.0876
3	2	Long Term	-0.0628	-0.0807	-0.0876	-0.0450	-0.0381	0.0000	0.0000	-0.0876
3	2	Long Term	-0.0628	-0.0807	-0.0876	-0.0450	-0.0381	0.0000	0.0000	-0.0876
3	2	Long Term	-0.0627	-0.0806	-0.0875	-0.0448	-0.0378	0.0000	0.0000	-0.0875
3	2	Long Term	-0.0608	-0.0583	-0.0741	-0.0632	-0.0475	0.0000	0.0000	-0.0741
3	2	Long Term	-0.0603	-0.0527	-0.0707	-0.0678	-0.0499	0.0000	0.0000	-0.0707

RESULT : Member Stresses

Member	Station	Result Case	(P/A) @ Centroid (kips/in²)	Normal Stress @ Point 1 (kips/in²)	Normal Stress @ Point 2 (kips/in²)	Normal Stress @ Point 3 (kips/in²)	Normal Stress @ Point 4 (kips/in²)	Normal Stress @ Point 5	Normal Stress @ Point 6	Max ABS Total Stress (kips/in²)
3	2	Long Term	-0.0560	-0.0477	-0.0813	-0.0643	-0.0308	0.0000	0.0000	-0.0813
3	2	Strength Check:	-0.0627	-0.0806	-0.0875	-0.0448	-0.0378	0.0000	0.0000	-0.0875
3	2	Strength Check:	-0.0627	-0.0806	-0.0875	-0.0448	-0.0378	0.0000	0.0000	-0.0875
3	2	Strength Check:	-0.0627	-0.0806	-0.0875	-0.0448	-0.0378	0.0000	0.0000	-0.0875
3	2	Strength Check:	-0.0627	-0.0806	-0.0875	-0.0448	-0.0378	0.0000	0.0000	-0.0875
3	2	Strength Check:	0.0070	-0.0270	-0.0340	0.0409	0.0479	0.0000	0.0000	0.0479
3	2	Strength Check:	-0.0560	-0.0477	-0.0813	-0.0643	-0.0308	0.0000	0.0000	-0.0813
4	0	Set Precast In	0.0000	0.0000	0.0000	0.0000	0.0000	0.0000	0.0000	0.0000
4	0	Set Precast In	0.0000	0.0047	-0.0047	-0.0047	0.0047	0.0000	0.0000	-0.0047
4	0	Tension PT:	0.0000	0.0040	-0.0040	-0.0040	0.0040	0.0000	0.0000	-0.0040
4	0	Tension PT:	0.0000	0.0040	-0.0040	-0.0040	0.0040	0.0000	0.0000	-0.0040
4	0	Tension PT:	0.0000	0.0040	-0.0040	-0.0040	0.0040	0.0000	0.0000	-0.0040
4	0	Tension PT:	0.0000	0.0040	-0.0040	-0.0040	0.0040	0.0000	0.0000	-0.0040
4	0	Tension PT:	-0.0730	-0.0522	-0.0601	-0.0938	-0.0858	0.0000	0.0000	-0.0938
4	0	Add	-0.0730	-0.0522	-0.0601	-0.0937	-0.0858	0.0000	0.0000	-0.0937
4	0	Add	-0.0730	-0.0522	-0.0601	-0.0937	-0.0858	0.0000	0.0000	-0.0937
4	0	Add	-0.0730	-0.0522	-0.0601	-0.0937	-0.0858	0.0000	0.0000	-0.0937
4	0	Add	-0.0729	-0.0522	-0.0601	-0.0937	-0.0858	0.0000	0.0000	-0.0937
4	0	Add	-0.0730	-0.0445	-0.0679	-0.1015	-0.0781	0.0000	0.0000	-0.1015
4	0	Backfill to Grade:	-0.0730	-0.0462	-0.0663	-0.0998	-0.0797	0.0000	0.0000	-0.0998
4	0	Backfill to Grade:	-0.0730	-0.0462	-0.0663	-0.0998	-0.0797	0.0000	0.0000	-0.0998
4	0	Backfill to Grade:	-0.0730	-0.0462	-0.0663	-0.0998	-0.0797	0.0000	0.0000	-0.0998
4	0	Backfill to Grade:	-0.0729	-0.0462	-0.0662	-0.0997	-0.0796	0.0000	0.0000	-0.0997
4	0	Backfill to Grade:	-0.0661	0.0100	-0.0099	-0.1422	-0.1222	0.0000	0.0000	-0.1422
4	0	Backfill to Grade:	-0.0642	0.0280	0.0078	-0.1563	-0.1361	0.0000	0.0000	-0.1563
4	0	Pave: Pave:	-0.0661	-0.0020	-0.0219	-0.1301	-0.1102	0.0000	0.0000	-0.1301
4	0	Pave: Pave:	-0.0661	-0.0020	-0.0219	-0.1301	-0.1102	0.0000	0.0000	-0.1301
4	0	Pave: Pave: PT	-0.0661	-0.0020	-0.0219	-0.1301	-0.1102	0.0000	0.0000	-0.1301
4	0	Pave: Pave:	-0.0661	-0.0020	-0.0219	-0.1301	-0.1103	0.0000	0.0000	-0.1301
4	0	Pave: Pave: step	-0.0661	-0.0009	-0.0230	-0.1313	-0.1091	0.0000	0.0000	-0.1313
4	0	Open Bridge to	-0.0661	-0.0032	-0.0250	-0.1290	-0.1072	0.0000	0.0000	-0.1290
4	0	Open Bridge to	-0.0661	-0.0032	-0.0250	-0.1290	-0.1072	0.0000	0.0000	-0.1290
4	0	Open Bridge to	-0.0661	-0.0032	-0.0250	-0.1290	-0.1072	0.0000	0.0000	-0.1290
4	0	Open Bridge to	-0.0661	-0.0032	-0.0250	-0.1290	-0.1072	0.0000	0.0000	-0.1290

RESULT : Member Stresses

Member	Station	Result Case	(P/A) @ Centroid (kips/in²)	Normal Stress @ Point 1 (kips/in²)	Normal Stress @ Point 2 (kips/in²)	Normal Stress @ Point 3 (kips/in²)	Normal Stress @ Point 4 (kips/in²)	Normal Stress @ Point 5	Normal Stress @ Point 6	Max ABS Total Stress (kips/in²)
4	0	Open Bridge to	-0.0638	0.0246	-0.0082	-0.1521	-0.1193	0.0000	0.0000	-0.1521
4	0	Open Bridge to	-0.0642	0.0191	-0.0116	-0.1475	-0.1169	0.0000	0.0000	-0.1475
4	0	Partial Live Load	-0.0661	-0.0046	-0.0263	-0.1275	-0.1058	0.0000	0.0000	-0.1275
4	0	Partial Live Load	-0.0661	-0.0046	-0.0263	-0.1275	-0.1058	0.0000	0.0000	-0.1275
4	0	Partial Live Load	-0.0661	-0.0046	-0.0263	-0.1275	-0.1058	0.0000	0.0000	-0.1275
4	0	Partial Live Load	-0.0661	-0.0046	-0.0263	-0.1275	-0.1058	0.0000	0.0000	-0.1275
4	0	Partial Live Load	-0.0658	-0.0019	-0.0246	-0.1298	-0.1070	0.0000	0.0000	-0.1298
4	0	Remove Long	-0.0658	-0.0825	-0.0902	-0.0492	-0.0414	0.0000	0.0000	-0.0902
4	0	Remove Long	-0.0658	-0.0825	-0.0902	-0.0492	-0.0414	0.0000	0.0000	-0.0902
4	0	Remove Long	-0.0658	-0.0825	-0.0902	-0.0492	-0.0414	0.0000	0.0000	-0.0902
4	0	Remove Long	-0.0628	-0.0802	-0.0879	-0.0454	-0.0377	0.0000	0.0000	-0.0879
4	0	Remove Long	-0.0630	-0.0829	-0.0896	-0.0431	-0.0365	0.0000	0.0000	-0.0896
4	0	Long Term	-0.0630	-0.0815	-0.0885	-0.0445	-0.0376	0.0000	0.0000	-0.0885
4	0	Long Term	-0.0630	-0.0815	-0.0885	-0.0445	-0.0376	0.0000	0.0000	-0.0885
4	0	Long Term	-0.0630	-0.0815	-0.0885	-0.0445	-0.0376	0.0000	0.0000	-0.0885
4	0	Long Term	-0.0628	-0.0814	-0.0883	-0.0443	-0.0374	0.0000	0.0000	-0.0883
4	0	Long Term	-0.0610	-0.0592	-0.0749	-0.0628	-0.0470	0.0000	0.0000	-0.0749
4	0	Long Term	-0.0605	-0.0536	-0.0716	-0.0674	-0.0495	0.0000	0.0000	-0.0716
4	0	Long Term	-0.0564	-0.0487	-0.0823	-0.0641	-0.0305	0.0000	0.0000	-0.0823
4	0	Strength Check:	-0.0628	-0.0814	-0.0883	-0.0443	-0.0374	0.0000	0.0000	-0.0883
4	0	Strength Check:	-0.0628	-0.0814	-0.0883	-0.0443	-0.0374	0.0000	0.0000	-0.0883
4	0	Strength Check:	-0.0628	-0.0814	-0.0883	-0.0443	-0.0374	0.0000	0.0000	-0.0883
4	0	Strength Check:	-0.0628	-0.0814	-0.0883	-0.0443	-0.0374	0.0000	0.0000	-0.0883
4	0	Strength Check:	0.0068	-0.0278	-0.0348	0.0414	0.0484	0.0000	0.0000	0.0484
4	0	Strength Check:	-0.0564	-0.0487	-0.0823	-0.0641	-0.0305	0.0000	0.0000	-0.0823
4	1	Set Precast In	0.0000	0.0000	0.0000	0.0000	0.0000	0.0000	0.0000	0.0000
4	1	Set Precast In	0.0000	0.0019	-0.0019	-0.0019	0.0019	0.0000	0.0000	-0.0019
4	1	Tension PT:	0.0000	0.0012	-0.0012	-0.0012	0.0012	0.0000	0.0000	-0.0012
4	1	Tension PT:	0.0000	0.0012	-0.0012	-0.0012	0.0012	0.0000	0.0000	-0.0012
4	1	Tension PT:	0.0000	0.0012	-0.0012	-0.0012	0.0012	0.0000	0.0000	-0.0012
4	1	Tension PT:	0.0000	0.0012	-0.0012	-0.0012	0.0012	0.0000	0.0000	-0.0012
4	1	Tension PT:	-0.0727	-0.0611	-0.0635	-0.0842	-0.0818	0.0000	0.0000	-0.0842
4	1	Add	-0.0727	-0.0612	-0.0635	-0.0841	-0.0818	0.0000	0.0000	-0.0841
4	1	Add	-0.0727	-0.0612	-0.0635	-0.0841	-0.0818	0.0000	0.0000	-0.0841

RESULT : Member Stresses

Member	Station	Result Case	(P/A) @ Centroid (kips/in²)	Normal Stress @ Point 1 (kips/in²)	Normal Stress @ Point 2 (kips/in²)	Normal Stress @ Point 3 (kips/in²)	Normal Stress @ Point 4 (kips/in²)	Normal Stress @ Point 5	Normal Stress @ Point 6	Max ABS Total Stress (kips/in²)
4	1	Add	-0.0727	-0.0612	-0.0635	-0.0841	-0.0818	0.0000	0.0000	-0.0841
4	1	Add	-0.0726	-0.0611	-0.0635	-0.0841	-0.0818	0.0000	0.0000	-0.0841
4	1	Add	-0.0727	-0.0584	-0.0663	-0.0869	-0.0790	0.0000	0.0000	-0.0869
4	1	Backfill to Grade:	-0.0727	-0.0601	-0.0646	-0.0852	-0.0807	0.0000	0.0000	-0.0852
4	1	Backfill to Grade:	-0.0727	-0.0601	-0.0646	-0.0852	-0.0807	0.0000	0.0000	-0.0852
4	1	Backfill to Grade:	-0.0727	-0.0601	-0.0646	-0.0852	-0.0807	0.0000	0.0000	-0.0852
4	1	Backfill to Grade:	-0.0726	-0.0600	-0.0646	-0.0852	-0.0806	0.0000	0.0000	-0.0852
4	1	Backfill to Grade:	-0.0657	-0.0164	-0.0209	-0.1151	-0.1106	0.0000	0.0000	-0.1151
4	1	Backfill to Grade:	-0.0639	-0.0027	-0.0074	-0.1250	-0.1203	0.0000	0.0000	-0.1250
4	1	Pave: Pave:	-0.0657	-0.0261	-0.0305	-0.1053	-0.1009	0.0000	0.0000	-0.1053
4	1	Pave: Pave:	-0.0657	-0.0261	-0.0305	-0.1053	-0.1009	0.0000	0.0000	-0.1053
4	1	Pave: Pave: PT	-0.0657	-0.0261	-0.0305	-0.1053	-0.1009	0.0000	0.0000	-0.1053
4	1	Pave: Pave:	-0.0658	-0.0262	-0.0305	-0.1053	-0.1010	0.0000	0.0000	-0.1053
4	1	Pave: Pave: step	-0.0658	-0.0258	-0.0310	-0.1058	-0.1006	0.0000	0.0000	-0.1058
4	1	Open Bridge to	-0.0658	-0.0276	-0.0325	-0.1039	-0.0990	0.0000	0.0000	-0.1039
4	1	Open Bridge to	-0.0658	-0.0276	-0.0325	-0.1039	-0.0990	0.0000	0.0000	-0.1039
4	1	Open Bridge to	-0.0658	-0.0276	-0.0325	-0.1039	-0.0990	0.0000	0.0000	-0.1039
4	1	Open Bridge to	-0.0658	-0.0276	-0.0325	-0.1039	-0.0990	0.0000	0.0000	-0.1039
4	1	Open Bridge to	-0.0634	-0.0086	-0.0176	-0.1182	-0.1092	0.0000	0.0000	-0.1182
4	1	Open Bridge to	-0.0639	-0.0124	-0.0206	-0.1153	-0.1072	0.0000	0.0000	-0.1153
4	1	Partial Live Load	-0.0658	-0.0288	-0.0336	-0.1027	-0.0980	0.0000	0.0000	-0.1027
4	1	Partial Live Load	-0.0658	-0.0288	-0.0336	-0.1027	-0.0980	0.0000	0.0000	-0.1027
4	1	Partial Live Load	-0.0658	-0.0288	-0.0336	-0.1027	-0.0980	0.0000	0.0000	-0.1027
4	1	Partial Live Load	-0.0658	-0.0288	-0.0336	-0.1027	-0.0980	0.0000	0.0000	-0.1027
4	1	Partial Live Load	-0.0655	-0.0269	-0.0321	-0.1041	-0.0990	0.0000	0.0000	-0.1041
4	1	Remove Long	-0.0655	-0.0935	-0.0837	-0.0376	-0.0473	0.0000	0.0000	-0.0935
4	1	Remove Long	-0.0655	-0.0935	-0.0837	-0.0375	-0.0473	0.0000	0.0000	-0.0935
4	1	Remove Long	-0.0655	-0.0935	-0.0837	-0.0375	-0.0473	0.0000	0.0000	-0.0935
4	1	Remove Long	-0.0625	-0.0909	-0.0811	-0.0341	-0.0438	0.0000	0.0000	-0.0909
4	1	Remove Long	-0.0627	-0.0928	-0.0826	-0.0326	-0.0428	0.0000	0.0000	-0.0928
4	1	Long Term	-0.0627	-0.0916	-0.0818	-0.0338	-0.0436	0.0000	0.0000	-0.0916
4	1	Long Term	-0.0627	-0.0916	-0.0818	-0.0338	-0.0436	0.0000	0.0000	-0.0916
4	1	Long Term	-0.0627	-0.0916	-0.0818	-0.0338	-0.0436	0.0000	0.0000	-0.0916
4	1	Long Term	-0.0625	-0.0915	-0.0816	-0.0336	-0.0435	0.0000	0.0000	-0.0915

RESULT : Member Stresses

Member	Station	Result Case	(P/A) @ Centroid (kips/in²)	Normal Stress @ Point 1 (kips/in²)	Normal Stress @ Point 2 (kips/in²)	Normal Stress @ Point 3 (kips/in²)	Normal Stress @ Point 4 (kips/in²)	Normal Stress @ Point 5	Normal Stress @ Point 6	Max ABS Total Stress (kips/in²)
4	1	Long Term	-0.0607	-0.0763	-0.0697	-0.0451	-0.0516	0.0000	0.0000	-0.0763
4	1	Long Term	-0.0602	-0.0725	-0.0668	-0.0479	-0.0536	0.0000	0.0000	-0.0725
4	1	Long Term	-0.0561	-0.0698	-0.0699	-0.0423	-0.0422	0.0000	0.0000	-0.0699
4	1	Strength Check:	-0.0625	-0.0915	-0.0816	-0.0336	-0.0435	0.0000	0.0000	-0.0915
4	1	Strength Check:	-0.0625	-0.0915	-0.0816	-0.0336	-0.0435	0.0000	0.0000	-0.0915
4	1	Strength Check:	-0.0625	-0.0915	-0.0816	-0.0336	-0.0435	0.0000	0.0000	-0.0915
4	1	Strength Check:	-0.0625	-0.0915	-0.0816	-0.0336	-0.0435	0.0000	0.0000	-0.0915
4	1	Strength Check:	0.0068	-0.0320	-0.0222	0.0456	0.0358	0.0000	0.0000	0.0456
4	1	Strength Check:	-0.0561	-0.0698	-0.0699	-0.0423	-0.0422	0.0000	0.0000	-0.0699
4	2	Set Precast In	0.0000	0.0000	0.0000	0.0000	0.0000	0.0000	0.0000	0.0000
4	2	Set Precast In	0.0000	-0.0002	0.0001	0.0001	-0.0002	0.0000	0.0000	-0.0002
4	2	Tension PT:	0.0000	-0.0009	0.0008	0.0008	-0.0009	0.0000	0.0000	-0.0009
4	2	Tension PT:	0.0000	-0.0009	0.0008	0.0008	-0.0009	0.0000	0.0000	-0.0009
4	2	Tension PT:	0.0000	-0.0009	0.0008	0.0008	-0.0009	0.0000	0.0000	-0.0009
4	2	Tension PT:	0.0000	-0.0009	0.0008	0.0008	-0.0009	0.0000	0.0000	-0.0009
4	2	Tension PT:	-0.0724	-0.0692	-0.0676	-0.0755	-0.0772	0.0000	0.0000	-0.0772
4	2	Add	-0.0724	-0.0693	-0.0675	-0.0755	-0.0772	0.0000	0.0000	-0.0772
4	2	Add	-0.0724	-0.0693	-0.0675	-0.0755	-0.0772	0.0000	0.0000	-0.0772
4	2	Add	-0.0724	-0.0693	-0.0675	-0.0755	-0.0772	0.0000	0.0000	-0.0772
4	2	Add	-0.0723	-0.0692	-0.0675	-0.0754	-0.0772	0.0000	0.0000	-0.0772
4	2	Add	-0.0724	-0.0701	-0.0667	-0.0747	-0.0780	0.0000	0.0000	-0.0780
4	2	Backfill to Grade:	-0.0724	-0.0717	-0.0651	-0.0730	-0.0797	0.0000	0.0000	-0.0797
4	2	Backfill to Grade:	-0.0724	-0.0717	-0.0651	-0.0730	-0.0797	0.0000	0.0000	-0.0797
4	2	Backfill to Grade:	-0.0724	-0.0717	-0.0651	-0.0730	-0.0797	0.0000	0.0000	-0.0797
4	2	Backfill to Grade:	-0.0723	-0.0717	-0.0650	-0.0730	-0.0796	0.0000	0.0000	-0.0796
4	2	Backfill to Grade:	-0.0655	-0.0275	-0.0208	-0.1034	-0.1101	0.0000	0.0000	-0.1101
4	2	Backfill to Grade:	-0.0636	-0.0141	-0.0076	-0.1131	-0.1196	0.0000	0.0000	-0.1196
4	2	Pave: Pave:	-0.0655	-0.0350	-0.0282	-0.0959	-0.1027	0.0000	0.0000	-0.1027
4	2	Pave: Pave:	-0.0655	-0.0350	-0.0282	-0.0959	-0.1027	0.0000	0.0000	-0.1027
4	2	Pave: Pave: PT	-0.0655	-0.0350	-0.0282	-0.0959	-0.1027	0.0000	0.0000	-0.1027
4	2	Pave: Pave:	-0.0655	-0.0350	-0.0282	-0.0959	-0.1027	0.0000	0.0000	-0.1027
4	2	Pave: Pave: step	-0.0655	-0.0352	-0.0281	-0.0958	-0.1028	0.0000	0.0000	-0.1028
4	2	Open Bridge to	-0.0655	-0.0366	-0.0292	-0.0943	-0.1017	0.0000	0.0000	-0.1017
4	2	Open Bridge to	-0.0655	-0.0366	-0.0292	-0.0943	-0.1017	0.0000	0.0000	-0.1017

RESULT : Member Stresses

Member	Station	Result Case	(P/A) @ Centroid (kips/in²)	Normal Stress @ Point 1 (kips/in²)	Normal Stress @ Point 2 (kips/in²)	Normal Stress @ Point 3 (kips/in²)	Normal Stress @ Point 4 (kips/in²)	Normal Stress @ Point 5	Normal Stress @ Point 6	Max ABS Total Stress (kips/in²)
4	2	Open Bridge to	-0.0655	-0.0366	-0.0292	-0.0943	-0.1017	0.0000	0.0000	-0.1017
4	2	Open Bridge to	-0.0655	-0.0366	-0.0292	-0.0943	-0.1017	0.0000	0.0000	-0.1017
4	2	Open Bridge to	-0.0631	-0.0204	-0.0122	-0.1059	-0.1141	0.0000	0.0000	-0.1141
4	2	Open Bridge to	-0.0636	-0.0237	-0.0156	-0.1036	-0.1116	0.0000	0.0000	-0.1116
4	2	Partial Live Load	-0.0655	-0.0376	-0.0300	-0.0934	-0.1009	0.0000	0.0000	-0.1009
4	2	Partial Live Load	-0.0655	-0.0376	-0.0300	-0.0934	-0.1009	0.0000	0.0000	-0.1009
4	2	Partial Live Load	-0.0655	-0.0376	-0.0300	-0.0934	-0.1009	0.0000	0.0000	-0.1009
4	2	Partial Live Load	-0.0655	-0.0376	-0.0300	-0.0934	-0.1009	0.0000	0.0000	-0.1009
4	2	Partial Live Load	-0.0652	-0.0359	-0.0283	-0.0945	-0.1021	0.0000	0.0000	-0.1021
4	2	Remove Long	-0.0652	-0.0884	-0.0661	-0.0420	-0.0644	0.0000	0.0000	-0.0884
4	2	Remove Long	-0.0652	-0.0884	-0.0661	-0.0420	-0.0644	0.0000	0.0000	-0.0884
4	2	Remove Long	-0.0652	-0.0884	-0.0661	-0.0420	-0.0644	0.0000	0.0000	-0.0884
4	2	Remove Long	-0.0622	-0.0856	-0.0632	-0.0388	-0.0611	0.0000	0.0000	-0.0856
4	2	Remove Long	-0.0624	-0.0872	-0.0649	-0.0377	-0.0599	0.0000	0.0000	-0.0872
4	2	Long Term	-0.0624	-0.0863	-0.0643	-0.0386	-0.0605	0.0000	0.0000	-0.0863
4	2	Long Term	-0.0624	-0.0863	-0.0643	-0.0386	-0.0605	0.0000	0.0000	-0.0863
4	2	Long Term	-0.0624	-0.0863	-0.0643	-0.0386	-0.0605	0.0000	0.0000	-0.0863
4	2	Long Term	-0.0623	-0.0861	-0.0642	-0.0384	-0.0603	0.0000	0.0000	-0.0861
4	2	Long Term	-0.0604	-0.0732	-0.0505	-0.0476	-0.0702	0.0000	0.0000	-0.0732
4	2	Long Term	-0.0599	-0.0699	-0.0471	-0.0499	-0.0727	0.0000	0.0000	-0.0727
4	2	Long Term	-0.0558	-0.0681	-0.0441	-0.0434	-0.0675	0.0000	0.0000	-0.0681
4	2	Strength Check:	-0.0623	-0.0861	-0.0642	-0.0384	-0.0603	0.0000	0.0000	-0.0861
4	2	Strength Check:	-0.0623	-0.0861	-0.0642	-0.0384	-0.0603	0.0000	0.0000	-0.0861
4	2	Strength Check:	-0.0623	-0.0861	-0.0642	-0.0384	-0.0603	0.0000	0.0000	-0.0861
4	2	Strength Check:	-0.0623	-0.0861	-0.0642	-0.0384	-0.0603	0.0000	0.0000	-0.0861
4	2	Strength Check:	0.0068	-0.0208	0.0011	0.0345	0.0125	0.0000	0.0000	0.0345
4	2	Strength Check:	-0.0558	-0.0681	-0.0441	-0.0434	-0.0675	0.0000	0.0000	-0.0681
5	0	Set Precast In	0.0000	0.0000	0.0000	0.0000	0.0000	0.0000	0.0000	0.0000
5	0	Set Precast In	0.0000	-0.0002	0.0001	0.0001	-0.0002	0.0000	0.0000	-0.0002
5	0	Tension PT:	0.0000	-0.0009	0.0008	0.0008	-0.0009	0.0000	0.0000	-0.0009
5	0	Tension PT:	0.0000	-0.0009	0.0008	0.0008	-0.0009	0.0000	0.0000	-0.0009
5	0	Tension PT:	0.0000	-0.0009	0.0008	0.0008	-0.0009	0.0000	0.0000	-0.0009
5	0	Tension PT:	0.0000	-0.0009	0.0008	0.0008	-0.0009	0.0000	0.0000	-0.0009
5	0	Tension PT:	-0.0724	-0.0692	-0.0676	-0.0755	-0.0772	0.0000	0.0000	-0.0772

RESULT : Member Stresses

Member	Station	Result Case	(P/A) @ Centroid (kips/in²)	Normal Stress @ Point 1 (kips/in²)	Normal Stress @ Point 2 (kips/in²)	Normal Stress @ Point 3 (kips/in²)	Normal Stress @ Point 4 (kips/in²)	Normal Stress @ Point 5	Normal Stress @ Point 6	Max ABS Total Stress (kips/in²)
5	0	Add	-0.0724	-0.0693	-0.0675	-0.0755	-0.0772	0.0000	0.0000	-0.0772
5	0	Add	-0.0724	-0.0693	-0.0675	-0.0755	-0.0772	0.0000	0.0000	-0.0772
5	0	Add	-0.0724	-0.0693	-0.0675	-0.0755	-0.0772	0.0000	0.0000	-0.0772
5	0	Add	-0.0723	-0.0692	-0.0675	-0.0754	-0.0772	0.0000	0.0000	-0.0772
5	0	Add	-0.0724	-0.0701	-0.0667	-0.0747	-0.0780	0.0000	0.0000	-0.0780
5	0	Backfill to Grade:	-0.0724	-0.0717	-0.0651	-0.0730	-0.0797	0.0000	0.0000	-0.0797
5	0	Backfill to Grade:	-0.0724	-0.0717	-0.0651	-0.0730	-0.0797	0.0000	0.0000	-0.0797
5	0	Backfill to Grade:	-0.0724	-0.0717	-0.0651	-0.0730	-0.0797	0.0000	0.0000	-0.0797
5	0	Backfill to Grade:	-0.0723	-0.0717	-0.0650	-0.0730	-0.0796	0.0000	0.0000	-0.0796
5	0	Backfill to Grade:	-0.0655	-0.0275	-0.0208	-0.1034	-0.1101	0.0000	0.0000	-0.1101
5	0	Backfill to Grade:	-0.0636	-0.0141	-0.0076	-0.1131	-0.1195	0.0000	0.0000	-0.1195
5	0	Pave: Pave:	-0.0655	-0.0350	-0.0282	-0.0959	-0.1027	0.0000	0.0000	-0.1027
5	0	Pave: Pave:	-0.0655	-0.0350	-0.0282	-0.0959	-0.1027	0.0000	0.0000	-0.1027
5	0	Pave: Pave: PT	-0.0655	-0.0350	-0.0282	-0.0959	-0.1027	0.0000	0.0000	-0.1027
5	0	Pave: Pave:	-0.0655	-0.0351	-0.0283	-0.0959	-0.1027	0.0000	0.0000	-0.1027
5	0	Pave: Pave: step	-0.0655	-0.0352	-0.0281	-0.0958	-0.1028	0.0000	0.0000	-0.1028
5	0	Open Bridge to	-0.0655	-0.0367	-0.0293	-0.0943	-0.1017	0.0000	0.0000	-0.1017
5	0	Open Bridge to	-0.0655	-0.0367	-0.0293	-0.0943	-0.1017	0.0000	0.0000	-0.1017
5	0	Open Bridge to	-0.0655	-0.0367	-0.0293	-0.0943	-0.1017	0.0000	0.0000	-0.1017
5	0	Open Bridge to	-0.0655	-0.0367	-0.0293	-0.0943	-0.1017	0.0000	0.0000	-0.1017
5	0	Open Bridge to	-0.0631	-0.0204	-0.0122	-0.1058	-0.1141	0.0000	0.0000	-0.1141
5	0	Open Bridge to	-0.0636	-0.0237	-0.0156	-0.1035	-0.1116	0.0000	0.0000	-0.1116
5	0	Partial Live Load	-0.0655	-0.0376	-0.0301	-0.0934	-0.1009	0.0000	0.0000	-0.1009
5	0	Partial Live Load	-0.0655	-0.0376	-0.0301	-0.0934	-0.1009	0.0000	0.0000	-0.1009
5	0	Partial Live Load	-0.0655	-0.0376	-0.0301	-0.0934	-0.1009	0.0000	0.0000	-0.1009
5	0	Partial Live Load	-0.0655	-0.0376	-0.0301	-0.0934	-0.1009	0.0000	0.0000	-0.1009
5	0	Partial Live Load	-0.0652	-0.0360	-0.0284	-0.0945	-0.1021	0.0000	0.0000	-0.1021
5	0	Remove Long	-0.0652	-0.0885	-0.0662	-0.0420	-0.0643	0.0000	0.0000	-0.0885
5	0	Remove Long	-0.0652	-0.0885	-0.0661	-0.0420	-0.0643	0.0000	0.0000	-0.0885
5	0	Remove Long	-0.0652	-0.0885	-0.0661	-0.0420	-0.0643	0.0000	0.0000	-0.0885
5	0	Remove Long	-0.0622	-0.0856	-0.0633	-0.0388	-0.0611	0.0000	0.0000	-0.0856
5	0	Remove Long	-0.0624	-0.0872	-0.0650	-0.0376	-0.0599	0.0000	0.0000	-0.0872
5	0	Long Term	-0.0624	-0.0863	-0.0644	-0.0385	-0.0605	0.0000	0.0000	-0.0863
5	0	Long Term	-0.0624	-0.0863	-0.0644	-0.0385	-0.0605	0.0000	0.0000	-0.0863

RESULT : Member Stresses

Member	Station	Result Case	(P/A) @ Centroid (kips/in²)	Normal Stress @ Point 1 (kips/in²)	Normal Stress @ Point 2 (kips/in²)	Normal Stress @ Point 3 (kips/in²)	Normal Stress @ Point 4 (kips/in²)	Normal Stress @ Point 5	Normal Stress @ Point 6	Max ABS Total Stress (kips/in²)
5	0	Long Term	-0.0624	-0.0863	-0.0644	-0.0385	-0.0605	0.0000	0.0000	-0.0863
5	0	Long Term	-0.0623	-0.0862	-0.0642	-0.0383	-0.0603	0.0000	0.0000	-0.0862
5	0	Long Term	-0.0604	-0.0732	-0.0506	-0.0476	-0.0702	0.0000	0.0000	-0.0732
5	0	Long Term	-0.0599	-0.0700	-0.0472	-0.0499	-0.0727	0.0000	0.0000	-0.0727
5	0	Long Term	-0.0558	-0.0682	-0.0441	-0.0434	-0.0674	0.0000	0.0000	-0.0682
5	0	Strength Check:	-0.0623	-0.0862	-0.0642	-0.0383	-0.0603	0.0000	0.0000	-0.0862
5	0	Strength Check:	-0.0623	-0.0862	-0.0642	-0.0383	-0.0603	0.0000	0.0000	-0.0862
5	0	Strength Check:	-0.0623	-0.0862	-0.0642	-0.0383	-0.0603	0.0000	0.0000	-0.0862
5	0	Strength Check:	-0.0623	-0.0862	-0.0642	-0.0383	-0.0603	0.0000	0.0000	-0.0862
5	0	Strength Check:	0.0068	-0.0209	0.0011	0.0345	0.0126	0.0000	0.0000	0.0345
5	0	Strength Check:	-0.0558	-0.0682	-0.0441	-0.0434	-0.0674	0.0000	0.0000	-0.0682
5	1	Set Precast In	0.0000	0.0000	0.0000	0.0000	0.0000	0.0000	0.0000	0.0000
5	1	Set Precast In	0.0000	-0.0016	0.0016	0.0016	-0.0016	0.0000	0.0000	0.0016
5	1	Tension PT:	0.0000	-0.0022	0.0023	0.0023	-0.0022	0.0000	0.0000	0.0023
5	1	Tension PT:	0.0000	-0.0022	0.0023	0.0023	-0.0022	0.0000	0.0000	0.0023
5	1	Tension PT:	0.0000	-0.0022	0.0023	0.0023	-0.0022	0.0000	0.0000	0.0023
5	1	Tension PT:	0.0000	-0.0022	0.0023	0.0023	-0.0022	0.0000	0.0000	0.0023
5	1	Tension PT:	-0.0714	-0.0721	-0.0677	-0.0707	-0.0751	0.0000	0.0000	-0.0751
5	1	Add	-0.0714	-0.0722	-0.0677	-0.0706	-0.0751	0.0000	0.0000	-0.0751
5	1	Add	-0.0714	-0.0722	-0.0677	-0.0706	-0.0751	0.0000	0.0000	-0.0751
5	1	Add	-0.0714	-0.0722	-0.0677	-0.0706	-0.0751	0.0000	0.0000	-0.0751
5	1	Add	-0.0713	-0.0721	-0.0676	-0.0706	-0.0751	0.0000	0.0000	-0.0751
5	1	Add	-0.0713	-0.0753	-0.0644	-0.0673	-0.0783	0.0000	0.0000	-0.0783
5	1	Backfill to Grade:	-0.0713	-0.0769	-0.0628	-0.0657	-0.0799	0.0000	0.0000	-0.0799
5	1	Backfill to Grade:	-0.0713	-0.0769	-0.0628	-0.0657	-0.0799	0.0000	0.0000	-0.0799
5	1	Backfill to Grade:	-0.0713	-0.0769	-0.0628	-0.0657	-0.0799	0.0000	0.0000	-0.0799
5	1	Backfill to Grade:	-0.0713	-0.0769	-0.0627	-0.0657	-0.0798	0.0000	0.0000	-0.0798
5	1	Backfill to Grade:	-0.0645	-0.0944	-0.0803	-0.0345	-0.0486	0.0000	0.0000	-0.0944
5	1	Backfill to Grade:	-0.0626	-0.1000	-0.0860	-0.0251	-0.0391	0.0000	0.0000	-0.1000
5	1	Pave: Pave:	-0.0645	-0.1022	-0.0879	-0.0267	-0.0410	0.0000	0.0000	-0.1022
5	1	Pave: Pave:	-0.0645	-0.1022	-0.0879	-0.0267	-0.0410	0.0000	0.0000	-0.1022
5	1	Pave: Pave: PT	-0.0645	-0.1022	-0.0879	-0.0267	-0.0410	0.0000	0.0000	-0.1022
5	1	Pave: Pave:	-0.0645	-0.1022	-0.0880	-0.0267	-0.0410	0.0000	0.0000	-0.1022
5	1	Pave: Pave: step	-0.0645	-0.1027	-0.0875	-0.0263	-0.0415	0.0000	0.0000	-0.1027

RESULT : Member Stresses

Member	Station	Result Case	(P/A) @ Centroid (kips/in²)	Normal Stress @ Point 1 (kips/in²)	Normal Stress @ Point 2 (kips/in²)	Normal Stress @ Point 3 (kips/in²)	Normal Stress @ Point 4 (kips/in²)	Normal Stress @ Point 5	Normal Stress @ Point 6	Max ABS Total Stress (kips/in²)
5	1	Open Bridge to	-0.0645	-0.1042	-0.0887	-0.0248	-0.0403	0.0000	0.0000	-0.1042
5	1	Open Bridge to	-0.0645	-0.1042	-0.0887	-0.0248	-0.0403	0.0000	0.0000	-0.1042
5	1	Open Bridge to	-0.0645	-0.1042	-0.0887	-0.0248	-0.0403	0.0000	0.0000	-0.1042
5	1	Open Bridge to	-0.0645	-0.1042	-0.0887	-0.0248	-0.0403	0.0000	0.0000	-0.1042
5	1	Open Bridge to	-0.0621	-0.1134	-0.0936	-0.0108	-0.0306	0.0000	0.0000	-0.1134
5	1	Open Bridge to	-0.0626	-0.1116	-0.0926	-0.0136	-0.0326	0.0000	0.0000	-0.1116
5	1	Partial Live Load	-0.0645	-0.1051	-0.0895	-0.0238	-0.0394	0.0000	0.0000	-0.1051
5	1	Partial Live Load	-0.0645	-0.1051	-0.0895	-0.0238	-0.0394	0.0000	0.0000	-0.1051
5	1	Partial Live Load	-0.0645	-0.1051	-0.0895	-0.0238	-0.0394	0.0000	0.0000	-0.1051
5	1	Partial Live Load	-0.0645	-0.1051	-0.0895	-0.0238	-0.0394	0.0000	0.0000	-0.1051
5	1	Partial Live Load	-0.0642	-0.1061	-0.0900	-0.0224	-0.0385	0.0000	0.0000	-0.1061
5	1	Remove Long	-0.0642	-0.1597	-0.1294	0.0312	0.0009	0.0000	0.0000	-0.1597
5	1	Remove Long	-0.0642	-0.1597	-0.1294	0.0312	0.0009	0.0000	0.0000	-0.1597
5	1	Remove Long	-0.0642	-0.1597	-0.1294	0.0312	0.0009	0.0000	0.0000	-0.1597
5	1	Remove Long	-0.0612	-0.1567	-0.1264	0.0343	0.0040	0.0000	0.0000	-0.1567
5	1	Remove Long	-0.0614	-0.1558	-0.1259	0.0329	0.0031	0.0000	0.0000	-0.1558
5	1	Long Term	-0.0614	-0.1549	-0.1253	0.0320	0.0024	0.0000	0.0000	-0.1549
5	1	Long Term	-0.0614	-0.1549	-0.1253	0.0320	0.0024	0.0000	0.0000	-0.1549
5	1	Long Term	-0.0614	-0.1549	-0.1253	0.0320	0.0024	0.0000	0.0000	-0.1549
5	1	Long Term	-0.0613	-0.1547	-0.1251	0.0322	0.0026	0.0000	0.0000	-0.1547
5	1	Long Term	-0.0594	-0.1621	-0.1291	0.0433	0.0103	0.0000	0.0000	-0.1621
5	1	Long Term	-0.0589	-0.1639	-0.1301	0.0461	0.0122	0.0000	0.0000	-0.1639
5	1	Long Term	-0.0547	-0.1634	-0.1234	0.0539	0.0139	0.0000	0.0000	-0.1634
5	1	Strength Check:	-0.0613	-0.1547	-0.1251	0.0322	0.0026	0.0000	0.0000	-0.1547
5	1	Strength Check:	-0.0613	-0.1547	-0.1251	0.0322	0.0026	0.0000	0.0000	-0.1547
5	1	Strength Check:	-0.0613	-0.1547	-0.1251	0.0322	0.0026	0.0000	0.0000	-0.1547
5	1	Strength Check:	-0.0613	-0.1547	-0.1251	0.0322	0.0026	0.0000	0.0000	-0.1547
5	1	Strength Check:	0.0069	-0.0880	-0.0584	0.1017	0.0721	0.0000	0.0000	0.1017
5	1	Strength Check:	-0.0547	-0.1634	-0.1234	0.0539	0.0139	0.0000	0.0000	-0.1634
5	2	Set Precast In	0.0000	0.0000	0.0000	0.0000	0.0000	0.0000	0.0000	0.0000
5	2	Set Precast In	0.0000	0.0046	-0.0045	-0.0045	0.0046	0.0000	0.0000	0.0046
5	2	Tension PT:	0.0000	0.0039	-0.0038	-0.0038	0.0039	0.0000	0.0000	0.0039
5	2	Tension PT:	0.0000	0.0039	-0.0038	-0.0038	0.0039	0.0000	0.0000	0.0039
5	2	Tension PT:	0.0000	0.0039	-0.0038	-0.0038	0.0039	0.0000	0.0000	0.0039

RESULT : Member Stresses

Member	Station	Result Case	(P/A) @ Centroid (kips/in²)	Normal Stress @ Point 1 (kips/in²)	Normal Stress @ Point 2 (kips/in²)	Normal Stress @ Point 3 (kips/in²)	Normal Stress @ Point 4 (kips/in²)	Normal Stress @ Point 5	Normal Stress @ Point 6	Max ABS Total Stress (kips/in²)
5	2	Tension PT:	0.0000	0.0039	-0.0038	-0.0038	0.0039	0.0000	0.0000	0.0039
5	2	Tension PT:	-0.0704	-0.0675	-0.0753	-0.0733	-0.0655	0.0000	0.0000	-0.0753
5	2	Add	-0.0704	-0.0675	-0.0753	-0.0733	-0.0655	0.0000	0.0000	-0.0753
5	2	Add	-0.0704	-0.0675	-0.0753	-0.0733	-0.0655	0.0000	0.0000	-0.0753
5	2	Add	-0.0704	-0.0675	-0.0753	-0.0733	-0.0655	0.0000	0.0000	-0.0753
5	2	Add	-0.0704	-0.0674	-0.0752	-0.0733	-0.0655	0.0000	0.0000	-0.0752
5	2	Add	-0.0703	-0.0597	-0.0829	-0.0809	-0.0577	0.0000	0.0000	-0.0829
5	2	Backfill to Grade:	-0.0703	-0.0612	-0.0813	-0.0794	-0.0593	0.0000	0.0000	-0.0813
5	2	Backfill to Grade:	-0.0703	-0.0612	-0.0813	-0.0794	-0.0593	0.0000	0.0000	-0.0813
5	2	Backfill to Grade:	-0.0703	-0.0612	-0.0813	-0.0794	-0.0593	0.0000	0.0000	-0.0813
5	2	Backfill to Grade:	-0.0703	-0.0611	-0.0813	-0.0794	-0.0592	0.0000	0.0000	-0.0813
5	2	Backfill to Grade:	-0.0635	-0.0075	-0.0277	-0.1194	-0.0992	0.0000	0.0000	-0.1194
5	2	Backfill to Grade:	-0.0616	0.0089	-0.0114	-0.1321	-0.1118	0.0000	0.0000	-0.1321
5	2	Pave: Pave:	-0.0635	-0.0155	-0.0356	-0.1114	-0.0913	0.0000	0.0000	-0.1114
5	2	Pave: Pave:	-0.0635	-0.0155	-0.0356	-0.1114	-0.0913	0.0000	0.0000	-0.1114
5	2	Pave: Pave: PT	-0.0635	-0.0155	-0.0356	-0.1114	-0.0913	0.0000	0.0000	-0.1114
5	2	Pave: Pave:	-0.0635	-0.0155	-0.0356	-0.1115	-0.0913	0.0000	0.0000	-0.1115
5	2	Pave: Pave: step	-0.0635	-0.0143	-0.0368	-0.1126	-0.0902	0.0000	0.0000	-0.1126
5	2	Open Bridge to	-0.0635	-0.0159	-0.0380	-0.1111	-0.0890	0.0000	0.0000	-0.1111
5	2	Open Bridge to	-0.0635	-0.0159	-0.0380	-0.1111	-0.0890	0.0000	0.0000	-0.1111
5	2	Open Bridge to	-0.0635	-0.0159	-0.0380	-0.1111	-0.0890	0.0000	0.0000	-0.1111
5	2	Open Bridge to	-0.0635	-0.0159	-0.0380	-0.1110	-0.0890	0.0000	0.0000	-0.1110
5	2	Open Bridge to	-0.0611	0.0099	-0.0229	-0.1321	-0.0993	0.0000	0.0000	-0.1321
5	2	Open Bridge to	-0.0616	0.0047	-0.0259	-0.1279	-0.0972	0.0000	0.0000	-0.1279
5	2	Partial Live Load	-0.0635	-0.0169	-0.0388	-0.1101	-0.0881	0.0000	0.0000	-0.1101
5	2	Partial Live Load	-0.0635	-0.0169	-0.0388	-0.1101	-0.0881	0.0000	0.0000	-0.1101
5	2	Partial Live Load	-0.0635	-0.0169	-0.0388	-0.1101	-0.0881	0.0000	0.0000	-0.1101
5	2	Partial Live Load	-0.0635	-0.0169	-0.0388	-0.1101	-0.0881	0.0000	0.0000	-0.1101
5	2	Partial Live Load	-0.0632	-0.0143	-0.0373	-0.1122	-0.0891	0.0000	0.0000	-0.1122
5	2	Remove Long	-0.0632	-0.0690	-0.0783	-0.0575	-0.0481	0.0000	0.0000	-0.0783
5	2	Remove Long	-0.0632	-0.0690	-0.0783	-0.0575	-0.0481	0.0000	0.0000	-0.0783
5	2	Remove Long	-0.0632	-0.0690	-0.0783	-0.0575	-0.0481	0.0000	0.0000	-0.0783
5	2	Remove Long	-0.0602	-0.0659	-0.0753	-0.0545	-0.0451	0.0000	0.0000	-0.0753
5	2	Remove Long	-0.0604	-0.0685	-0.0768	-0.0524	-0.0441	0.0000	0.0000	-0.0768

RESULT : Member Stresses

Member	Station	Result Case	(P/A) @ Centroid (kips/in²)	Normal Stress @ Point 1 (kips/in²)	Normal Stress @ Point 2 (kips/in²)	Normal Stress @ Point 3 (kips/in²)	Normal Stress @ Point 4 (kips/in²)	Normal Stress @ Point 5	Normal Stress @ Point 6	Max ABS Total Stress (kips/in²)
5	2	Long Term	-0.0604	-0.0676	-0.0761	-0.0533	-0.0448	0.0000	0.0000	-0.0761
5	2	Long Term	-0.0604	-0.0676	-0.0761	-0.0533	-0.0448	0.0000	0.0000	-0.0761
5	2	Long Term	-0.0604	-0.0676	-0.0761	-0.0533	-0.0448	0.0000	0.0000	-0.0761
5	2	Long Term	-0.0603	-0.0674	-0.0759	-0.0531	-0.0446	0.0000	0.0000	-0.0759
5	2	Long Term	-0.0584	-0.0468	-0.0639	-0.0700	-0.0529	0.0000	0.0000	-0.0700
5	2	Long Term	-0.0579	-0.0417	-0.0609	-0.0742	-0.0550	0.0000	0.0000	-0.0742
5	2	Long Term	-0.0537	-0.0292	-0.0637	-0.0783	-0.0437	0.0000	0.0000	-0.0783
5	2	Strength Check:	-0.0603	-0.0674	-0.0759	-0.0531	-0.0446	0.0000	0.0000	-0.0759
5	2	Strength Check:	-0.0603	-0.0674	-0.0759	-0.0531	-0.0446	0.0000	0.0000	-0.0759
5	2	Strength Check:	-0.0603	-0.0674	-0.0759	-0.0531	-0.0446	0.0000	0.0000	-0.0759
5	2	Strength Check:	-0.0603	-0.0674	-0.0759	-0.0531	-0.0446	0.0000	0.0000	-0.0759
5	2	Strength Check:	0.0069	0.0007	-0.0078	0.0131	0.0216	0.0000	0.0000	0.0216
5	2	Strength Check:	-0.0537	-0.0292	-0.0637	-0.0783	-0.0437	0.0000	0.0000	-0.0783
6	0	Set Precast In	0.0000	0.0000	0.0000	0.0000	0.0000	0.0000	0.0000	0.0000
6	0	Set Precast In	0.0000	0.0045	-0.0046	-0.0046	0.0045	0.0000	0.0000	-0.0046
6	0	Tension PT:	0.0000	0.0038	-0.0039	-0.0039	0.0038	0.0000	0.0000	-0.0039
6	0	Tension PT:	0.0000	0.0038	-0.0039	-0.0039	0.0038	0.0000	0.0000	-0.0039
6	0	Tension PT:	0.0000	0.0038	-0.0039	-0.0039	0.0038	0.0000	0.0000	-0.0039
6	0	Tension PT:	0.0000	0.0038	-0.0039	-0.0039	0.0038	0.0000	0.0000	-0.0039
6	0	Tension PT:	-0.0705	-0.0675	-0.0754	-0.0734	-0.0655	0.0000	0.0000	-0.0754
6	0	Add	-0.0705	-0.0675	-0.0753	-0.0734	-0.0656	0.0000	0.0000	-0.0753
6	0	Add	-0.0705	-0.0675	-0.0753	-0.0734	-0.0656	0.0000	0.0000	-0.0753
6	0	Add	-0.0705	-0.0675	-0.0753	-0.0734	-0.0656	0.0000	0.0000	-0.0753
6	0	Add	-0.0704	-0.0675	-0.0753	-0.0733	-0.0656	0.0000	0.0000	-0.0753
6	0	Add	-0.0705	-0.0598	-0.0830	-0.0811	-0.0579	0.0000	0.0000	-0.0830
6	0	Backfill to Grade:	-0.0705	-0.0614	-0.0815	-0.0796	-0.0594	0.0000	0.0000	-0.0815
6	0	Backfill to Grade:	-0.0705	-0.0614	-0.0815	-0.0796	-0.0594	0.0000	0.0000	-0.0815
6	0	Backfill to Grade:	-0.0705	-0.0614	-0.0815	-0.0796	-0.0594	0.0000	0.0000	-0.0815
6	0	Backfill to Grade:	-0.0704	-0.0613	-0.0815	-0.0795	-0.0594	0.0000	0.0000	-0.0815
6	0	Backfill to Grade:	-0.0626	-0.0074	-0.0274	-0.1179	-0.0978	0.0000	0.0000	-0.1179
6	0	Backfill to Grade:	-0.0606	0.0091	-0.0109	-0.1303	-0.1102	0.0000	0.0000	-0.1303
6	0	Pave: Pave:	-0.0626	-0.0154	-0.0353	-0.1099	-0.0899	0.0000	0.0000	-0.1099
6	0	Pave: Pave:	-0.0626	-0.0154	-0.0353	-0.1099	-0.0899	0.0000	0.0000	-0.1099
6	0	Pave: Pave: PT	-0.0626	-0.0154	-0.0353	-0.1099	-0.0899	0.0000	0.0000	-0.1099

RESULT : Member Stresses

Member	Station	Result Case	(P/A) @ Centroid (kips/in²)	Normal Stress @ Point 1 (kips/in²)	Normal Stress @ Point 2 (kips/in²)	Normal Stress @ Point 3 (kips/in²)	Normal Stress @ Point 4 (kips/in²)	Normal Stress @ Point 5	Normal Stress @ Point 6	Max ABS Total Stress (kips/in²)
6	0	Pave: Pave:	-0.0627	-0.0154	-0.0354	-0.1099	-0.0900	0.0000	0.0000	-0.1099
6	0	Pave: Pave: step	-0.0627	-0.0143	-0.0365	-0.1110	-0.0888	0.0000	0.0000	-0.1110
6	0	Open Bridge to	-0.0627	-0.0159	-0.0377	-0.1095	-0.0876	0.0000	0.0000	-0.1095
6	0	Open Bridge to	-0.0627	-0.0159	-0.0377	-0.1095	-0.0876	0.0000	0.0000	-0.1095
6	0	Open Bridge to	-0.0627	-0.0159	-0.0377	-0.1095	-0.0876	0.0000	0.0000	-0.1095
6	0	Open Bridge to	-0.0627	-0.0158	-0.0377	-0.1095	-0.0876	0.0000	0.0000	-0.1095
6	0	Open Bridge to	-0.0601	0.0101	-0.0225	-0.1303	-0.0978	0.0000	0.0000	-0.1303
6	0	Open Bridge to	-0.0606	0.0049	-0.0255	-0.1262	-0.0958	0.0000	0.0000	-0.1262
6	0	Partial Live Load	-0.0627	-0.0168	-0.0386	-0.1085	-0.0867	0.0000	0.0000	-0.1085
6	0	Partial Live Load	-0.0627	-0.0168	-0.0386	-0.1085	-0.0867	0.0000	0.0000	-0.1085
6	0	Partial Live Load	-0.0627	-0.0168	-0.0386	-0.1085	-0.0867	0.0000	0.0000	-0.1085
6	0	Partial Live Load	-0.0627	-0.0168	-0.0386	-0.1085	-0.0867	0.0000	0.0000	-0.1085
6	0	Partial Live Load	-0.0624	-0.0142	-0.0371	-0.1106	-0.0878	0.0000	0.0000	-0.1106
6	0	Remove Long	-0.0624	-0.0689	-0.0781	-0.0559	-0.0468	0.0000	0.0000	-0.0781
6	0	Remove Long	-0.0624	-0.0689	-0.0781	-0.0559	-0.0468	0.0000	0.0000	-0.0781
6	0	Remove Long	-0.0624	-0.0689	-0.0781	-0.0559	-0.0468	0.0000	0.0000	-0.0781
6	0	Remove Long	-0.0594	-0.0659	-0.0750	-0.0529	-0.0438	0.0000	0.0000	-0.0750
6	0	Remove Long	-0.0596	-0.0685	-0.0765	-0.0508	-0.0428	0.0000	0.0000	-0.0765
6	0	Long Term	-0.0596	-0.0675	-0.0759	-0.0518	-0.0434	0.0000	0.0000	-0.0759
6	0	Long Term	-0.0596	-0.0675	-0.0759	-0.0518	-0.0434	0.0000	0.0000	-0.0759
6	0	Long Term	-0.0596	-0.0675	-0.0759	-0.0518	-0.0434	0.0000	0.0000	-0.0759
6	0	Long Term	-0.0595	-0.0674	-0.0757	-0.0516	-0.0433	0.0000	0.0000	-0.0757
6	0	Long Term	-0.0575	-0.0466	-0.0635	-0.0683	-0.0514	0.0000	0.0000	-0.0683
6	0	Long Term	-0.0569	-0.0414	-0.0604	-0.0724	-0.0535	0.0000	0.0000	-0.0724
6	0	Long Term	-0.0523	-0.0286	-0.0628	-0.0760	-0.0419	0.0000	0.0000	-0.0760
6	0	Strength Check:	-0.0595	-0.0674	-0.0757	-0.0516	-0.0433	0.0000	0.0000	-0.0757
6	0	Strength Check:	-0.0595	-0.0674	-0.0757	-0.0516	-0.0433	0.0000	0.0000	-0.0757
6	0	Strength Check:	-0.0595	-0.0674	-0.0757	-0.0516	-0.0433	0.0000	0.0000	-0.0757
6	0	Strength Check:	-0.0595	-0.0674	-0.0757	-0.0516	-0.0433	0.0000	0.0000	-0.0757
6	0	Strength Check:	0.0077	0.0007	-0.0075	0.0147	0.0229	0.0000	0.0000	0.0229
6	0	Strength Check:	-0.0523	-0.0286	-0.0628	-0.0760	-0.0419	0.0000	0.0000	-0.0760
6	1	Set Precast In	0.0000	0.0000	0.0000	0.0000	0.0000	0.0000	0.0000	0.0000
6	1	Set Precast In	0.0000	-0.0006	0.0005	0.0005	-0.0006	0.0000	0.0000	-0.0006
6	1	Tension PT:	0.0000	-0.0012	0.0012	0.0012	-0.0012	0.0000	0.0000	-0.0012

RESULT : Member Stresses

Member	Station	Result Case	(P/A) @ Centroid (kips/in²)	Normal Stress @ Point 1 (kips/in²)	Normal Stress @ Point 2 (kips/in²)	Normal Stress @ Point 3 (kips/in²)	Normal Stress @ Point 4 (kips/in²)	Normal Stress @ Point 5	Normal Stress @ Point 6	Max ABS Total Stress (kips/in²)
6	1	Tension PT:	0.0000	-0.0012	0.0012	0.0012	-0.0012	0.0000	0.0000	-0.0012
6	1	Tension PT:	0.0000	-0.0012	0.0012	0.0012	-0.0012	0.0000	0.0000	-0.0012
6	1	Tension PT:	0.0000	-0.0012	0.0012	0.0012	-0.0012	0.0000	0.0000	-0.0012
6	1	Tension PT:	-0.0695	-0.0690	-0.0673	-0.0699	-0.0717	0.0000	0.0000	-0.0717
6	1	Add	-0.0695	-0.0691	-0.0672	-0.0699	-0.0717	0.0000	0.0000	-0.0717
6	1	Add	-0.0695	-0.0691	-0.0672	-0.0699	-0.0717	0.0000	0.0000	-0.0717
6	1	Add	-0.0695	-0.0691	-0.0672	-0.0699	-0.0717	0.0000	0.0000	-0.0717
6	1	Add	-0.0694	-0.0690	-0.0672	-0.0698	-0.0717	0.0000	0.0000	-0.0717
6	1	Add	-0.0694	-0.0717	-0.0645	-0.0672	-0.0744	0.0000	0.0000	-0.0744
6	1	Backfill to Grade:	-0.0694	-0.0732	-0.0630	-0.0657	-0.0759	0.0000	0.0000	-0.0759
6	1	Backfill to Grade:	-0.0694	-0.0732	-0.0630	-0.0657	-0.0759	0.0000	0.0000	-0.0759
6	1	Backfill to Grade:	-0.0694	-0.0732	-0.0630	-0.0657	-0.0759	0.0000	0.0000	-0.0759
6	1	Backfill to Grade:	-0.0694	-0.0732	-0.0629	-0.0656	-0.0759	0.0000	0.0000	-0.0759
6	1	Backfill to Grade:	-0.0617	-0.0944	-0.0839	-0.0290	-0.0394	0.0000	0.0000	-0.0944
6	1	Backfill to Grade:	-0.0596	-0.1010	-0.0907	-0.0183	-0.0285	0.0000	0.0000	-0.1010
6	1	Pave: Pave:	-0.0617	-0.1022	-0.0917	-0.0211	-0.0316	0.0000	0.0000	-0.1022
6	1	Pave: Pave:	-0.0617	-0.1022	-0.0917	-0.0211	-0.0316	0.0000	0.0000	-0.1022
6	1	Pave: Pave: PT	-0.0617	-0.1022	-0.0917	-0.0211	-0.0316	0.0000	0.0000	-0.1022
6	1	Pave: Pave:	-0.0617	-0.1022	-0.0917	-0.0212	-0.0317	0.0000	0.0000	-0.1022
6	1	Pave: Pave: step	-0.0617	-0.1026	-0.0913	-0.0208	-0.0321	0.0000	0.0000	-0.1026
6	1	Open Bridge to	-0.0617	-0.1041	-0.0925	-0.0192	-0.0309	0.0000	0.0000	-0.1041
6	1	Open Bridge to	-0.0617	-0.1041	-0.0925	-0.0192	-0.0309	0.0000	0.0000	-0.1041
6	1	Open Bridge to	-0.0617	-0.1041	-0.0925	-0.0192	-0.0309	0.0000	0.0000	-0.1041
6	1	Open Bridge to	-0.0617	-0.1041	-0.0925	-0.0192	-0.0308	0.0000	0.0000	-0.1041
6	1	Open Bridge to	-0.0591	-0.1142	-0.0991	-0.0040	-0.0191	0.0000	0.0000	-0.1142
6	1	Open Bridge to	-0.0596	-0.1122	-0.0978	-0.0071	-0.0215	0.0000	0.0000	-0.1122
6	1	Partial Live Load	-0.0617	-0.1051	-0.0934	-0.0183	-0.0300	0.0000	0.0000	-0.1051
6	1	Partial Live Load	-0.0617	-0.1051	-0.0934	-0.0183	-0.0300	0.0000	0.0000	-0.1051
6	1	Partial Live Load	-0.0617	-0.1051	-0.0934	-0.0183	-0.0300	0.0000	0.0000	-0.1051
6	1	Partial Live Load	-0.0617	-0.1051	-0.0934	-0.0183	-0.0300	0.0000	0.0000	-0.1051
6	1	Partial Live Load	-0.0614	-0.1061	-0.0940	-0.0167	-0.0288	0.0000	0.0000	-0.1061
6	1	Remove Long	-0.0614	-0.1600	-0.1341	0.0372	0.0112	0.0000	0.0000	-0.1600
6	1	Remove Long	-0.0614	-0.1600	-0.1341	0.0371	0.0112	0.0000	0.0000	-0.1600
6	1	Remove Long	-0.0614	-0.1600	-0.1341	0.0371	0.0112	0.0000	0.0000	-0.1600

RESULT : Member Stresses

Member	Station	Result Case	(P/A) @ Centroid (kips/in²)	Normal Stress @ Point 1 (kips/in²)	Normal Stress @ Point 2 (kips/in²)	Normal Stress @ Point 3 (kips/in²)	Normal Stress @ Point 4 (kips/in²)	Normal Stress @ Point 5	Normal Stress @ Point 6	Max ABS Total Stress (kips/in²)
6	1	Remove Long	-0.0584	-0.1571	-0.1311	0.0402	0.0143	0.0000	0.0000	-0.1571
6	1	Remove Long	-0.0587	-0.1561	-0.1305	0.0387	0.0131	0.0000	0.0000	-0.1561
6	1	Long Term	-0.0587	-0.1552	-0.1298	0.0378	0.0125	0.0000	0.0000	-0.1552
6	1	Long Term	-0.0587	-0.1552	-0.1298	0.0378	0.0125	0.0000	0.0000	-0.1552
6	1	Long Term	-0.0587	-0.1552	-0.1298	0.0378	0.0125	0.0000	0.0000	-0.1552
6	1	Long Term	-0.0585	-0.1550	-0.1297	0.0380	0.0126	0.0000	0.0000	-0.1550
6	1	Long Term	-0.0565	-0.1631	-0.1350	0.0501	0.0220	0.0000	0.0000	-0.1631
6	1	Long Term	-0.0560	-0.1651	-0.1363	0.0532	0.0243	0.0000	0.0000	-0.1651
6	1	Long Term	-0.0514	-0.1642	-0.1307	0.0615	0.0280	0.0000	0.0000	-0.1642
6	1	Strength Check:	-0.0585	-0.1550	-0.1297	0.0380	0.0126	0.0000	0.0000	-0.1550
6	1	Strength Check:	-0.0585	-0.1550	-0.1297	0.0380	0.0126	0.0000	0.0000	-0.1550
6	1	Strength Check:	-0.0585	-0.1550	-0.1297	0.0380	0.0126	0.0000	0.0000	-0.1550
6	1	Strength Check:	-0.0585	-0.1550	-0.1297	0.0380	0.0126	0.0000	0.0000	-0.1550
6	1	Strength Check:	0.0077	-0.0903	-0.0644	0.1058	0.0798	0.0000	0.0000	0.1058
6	1	Strength Check:	-0.0514	-0.1642	-0.1307	0.0615	0.0280	0.0000	0.0000	-0.1642
6	2	Set Precast In	0.0000	0.0000	0.0000	0.0000	0.0000	0.0000	0.0000	0.0000
6	2	Set Precast In	0.0000	0.0019	-0.0018	-0.0018	0.0019	0.0000	0.0000	0.0019
6	2	Tension PT:	0.0000	0.0012	-0.0011	-0.0011	0.0012	0.0000	0.0000	0.0012
6	2	Tension PT:	0.0000	0.0012	-0.0011	-0.0011	0.0012	0.0000	0.0000	0.0012
6	2	Tension PT:	0.0000	0.0012	-0.0011	-0.0011	0.0012	0.0000	0.0000	0.0012
6	2	Tension PT:	0.0000	0.0012	-0.0011	-0.0011	0.0012	0.0000	0.0000	0.0012
6	2	Tension PT:	-0.0685	-0.0631	-0.0666	-0.0739	-0.0704	0.0000	0.0000	-0.0739
6	2	Add	-0.0685	-0.0632	-0.0666	-0.0738	-0.0704	0.0000	0.0000	-0.0738
6	2	Add	-0.0685	-0.0632	-0.0666	-0.0738	-0.0704	0.0000	0.0000	-0.0738
6	2	Add	-0.0685	-0.0632	-0.0666	-0.0738	-0.0704	0.0000	0.0000	-0.0738
6	2	Add	-0.0685	-0.0631	-0.0665	-0.0738	-0.0704	0.0000	0.0000	-0.0738
6	2	Add	-0.0684	-0.0630	-0.0666	-0.0739	-0.0702	0.0000	0.0000	-0.0739
6	2	Backfill to Grade:	-0.0684	-0.0645	-0.0651	-0.0723	-0.0718	0.0000	0.0000	-0.0723
6	2	Backfill to Grade:	-0.0684	-0.0645	-0.0651	-0.0723	-0.0718	0.0000	0.0000	-0.0723
6	2	Backfill to Grade:	-0.0684	-0.0645	-0.0651	-0.0723	-0.0718	0.0000	0.0000	-0.0723
6	2	Backfill to Grade:	-0.0684	-0.0645	-0.0651	-0.0723	-0.0717	0.0000	0.0000	-0.0723
6	2	Backfill to Grade:	-0.0607	-0.0278	-0.0281	-0.0936	-0.0933	0.0000	0.0000	-0.0936
6	2	Backfill to Grade:	-0.0587	-0.0170	-0.0177	-0.1003	-0.0996	0.0000	0.0000	-0.1003
6	2	Pave: Pave:	-0.0607	-0.0354	-0.0357	-0.0859	-0.0857	0.0000	0.0000	-0.0859

RESULT : Member Stresses

Member	Station	Result Case	(P/A) @ Centroid (kips/in²)	Normal Stress @ Point 1 (kips/in²)	Normal Stress @ Point 2 (kips/in²)	Normal Stress @ Point 3 (kips/in²)	Normal Stress @ Point 4 (kips/in²)	Normal Stress @ Point 5	Normal Stress @ Point 6	Max ABS Total Stress (kips/in²)
6	2	Pave: Pave:	-0.0607	-0.0354	-0.0357	-0.0859	-0.0857	0.0000	0.0000	-0.0859
6	2	Pave: Pave: PT	-0.0607	-0.0354	-0.0357	-0.0859	-0.0857	0.0000	0.0000	-0.0859
6	2	Pave: Pave:	-0.0607	-0.0355	-0.0357	-0.0860	-0.0857	0.0000	0.0000	-0.0860
6	2	Pave: Pave: step	-0.0607	-0.0354	-0.0357	-0.0860	-0.0857	0.0000	0.0000	-0.0860
6	2	Open Bridge to	-0.0607	-0.0369	-0.0369	-0.0845	-0.0845	0.0000	0.0000	-0.0845
6	2	Open Bridge to	-0.0607	-0.0369	-0.0369	-0.0845	-0.0845	0.0000	0.0000	-0.0845
6	2	Open Bridge to	-0.0607	-0.0369	-0.0369	-0.0845	-0.0845	0.0000	0.0000	-0.0845
6	2	Open Bridge to	-0.0607	-0.0369	-0.0369	-0.0845	-0.0845	0.0000	0.0000	-0.0845
6	2	Open Bridge to	-0.0581	-0.0234	-0.0239	-0.0928	-0.0924	0.0000	0.0000	-0.0928
6	2	Open Bridge to	-0.0587	-0.0261	-0.0265	-0.0912	-0.0908	0.0000	0.0000	-0.0912
6	2	Partial Live Load	-0.0607	-0.0379	-0.0377	-0.0835	-0.0837	0.0000	0.0000	-0.0837
6	2	Partial Live Load	-0.0607	-0.0379	-0.0377	-0.0835	-0.0837	0.0000	0.0000	-0.0837
6	2	Partial Live Load	-0.0607	-0.0379	-0.0377	-0.0835	-0.0837	0.0000	0.0000	-0.0837
6	2	Partial Live Load	-0.0607	-0.0379	-0.0377	-0.0835	-0.0837	0.0000	0.0000	-0.0837
6	2	Partial Live Load	-0.0604	-0.0365	-0.0364	-0.0844	-0.0845	0.0000	0.0000	-0.0845
6	2	Remove Long	-0.0604	-0.0896	-0.0755	-0.0313	-0.0453	0.0000	0.0000	-0.0896
6	2	Remove Long	-0.0604	-0.0896	-0.0756	-0.0313	-0.0453	0.0000	0.0000	-0.0896
6	2	Remove Long	-0.0604	-0.0896	-0.0756	-0.0313	-0.0453	0.0000	0.0000	-0.0896
6	2	Remove Long	-0.0575	-0.0868	-0.0727	-0.0281	-0.0422	0.0000	0.0000	-0.0868
6	2	Remove Long	-0.0577	-0.0882	-0.0740	-0.0273	-0.0414	0.0000	0.0000	-0.0882
6	2	Long Term	-0.0577	-0.0873	-0.0734	-0.0282	-0.0421	0.0000	0.0000	-0.0873
6	2	Long Term	-0.0577	-0.0873	-0.0734	-0.0282	-0.0421	0.0000	0.0000	-0.0873
6	2	Long Term	-0.0577	-0.0873	-0.0734	-0.0282	-0.0421	0.0000	0.0000	-0.0873
6	2	Long Term	-0.0576	-0.0872	-0.0733	-0.0280	-0.0419	0.0000	0.0000	-0.0872
6	2	Long Term	-0.0555	-0.0764	-0.0629	-0.0347	-0.0482	0.0000	0.0000	-0.0764
6	2	Long Term	-0.0550	-0.0737	-0.0603	-0.0363	-0.0497	0.0000	0.0000	-0.0737
6	2	Long Term	-0.0504	-0.0717	-0.0596	-0.0291	-0.0412	0.0000	0.0000	-0.0717
6	2	Strength Check:	-0.0576	-0.0872	-0.0733	-0.0280	-0.0419	0.0000	0.0000	-0.0872
6	2	Strength Check:	-0.0576	-0.0872	-0.0733	-0.0280	-0.0419	0.0000	0.0000	-0.0872
6	2	Strength Check:	-0.0576	-0.0872	-0.0733	-0.0280	-0.0419	0.0000	0.0000	-0.0872
6	2	Strength Check:	-0.0576	-0.0872	-0.0733	-0.0280	-0.0419	0.0000	0.0000	-0.0872
6	2	Strength Check:	0.0077	-0.0258	-0.0108	0.0413	0.0263	0.0000	0.0000	0.0413
6	2	Strength Check:	-0.0504	-0.0717	-0.0596	-0.0291	-0.0412	0.0000	0.0000	-0.0717
7	0	Set Precast In	0.0000	0.0000	0.0000	0.0000	0.0000	0.0000	0.0000	0.0000

RESULT : Member Stresses

Member	Station	Result Case	(P/A) @ Centroid (kips/in²)	Normal Stress @ Point 1 (kips/in²)	Normal Stress @ Point 2 (kips/in²)	Normal Stress @ Point 3 (kips/in²)	Normal Stress @ Point 4 (kips/in²)	Normal Stress @ Point 5	Normal Stress @ Point 6	Max ABS Total Stress (kips/in²)
7	0	Set Precast In	0.0000	0.0019	-0.0018	-0.0018	0.0019	0.0000	0.0000	0.0019
7	0	Tension PT:	0.0000	0.0012	-0.0011	-0.0011	0.0012	0.0000	0.0000	0.0012
7	0	Tension PT:	0.0000	0.0012	-0.0011	-0.0011	0.0012	0.0000	0.0000	0.0012
7	0	Tension PT:	0.0000	0.0012	-0.0011	-0.0011	0.0012	0.0000	0.0000	0.0012
7	0	Tension PT:	0.0000	0.0012	-0.0011	-0.0011	0.0012	0.0000	0.0000	0.0012
7	0	Tension PT:	-0.0685	-0.0631	-0.0666	-0.0739	-0.0704	0.0000	0.0000	-0.0739
7	0	Add	-0.0685	-0.0632	-0.0666	-0.0738	-0.0704	0.0000	0.0000	-0.0738
7	0	Add	-0.0685	-0.0632	-0.0666	-0.0738	-0.0704	0.0000	0.0000	-0.0738
7	0	Add	-0.0685	-0.0632	-0.0666	-0.0738	-0.0704	0.0000	0.0000	-0.0738
7	0	Add	-0.0685	-0.0631	-0.0665	-0.0738	-0.0704	0.0000	0.0000	-0.0738
7	0	Add	-0.0684	-0.0630	-0.0666	-0.0739	-0.0702	0.0000	0.0000	-0.0739
7	0	Backfill to Grade:	-0.0684	-0.0645	-0.0651	-0.0723	-0.0718	0.0000	0.0000	-0.0723
7	0	Backfill to Grade:	-0.0684	-0.0645	-0.0651	-0.0723	-0.0718	0.0000	0.0000	-0.0723
7	0	Backfill to Grade:	-0.0684	-0.0645	-0.0651	-0.0723	-0.0718	0.0000	0.0000	-0.0723
7	0	Backfill to Grade:	-0.0684	-0.0645	-0.0651	-0.0723	-0.0717	0.0000	0.0000	-0.0723
7	0	Backfill to Grade:	-0.0607	-0.0278	-0.0282	-0.0936	-0.0932	0.0000	0.0000	-0.0936
7	0	Backfill to Grade:	-0.0587	-0.0171	-0.0178	-0.1002	-0.0995	0.0000	0.0000	-0.1002
7	0	Pave: Pave:	-0.0607	-0.0355	-0.0358	-0.0859	-0.0856	0.0000	0.0000	-0.0859
7	0	Pave: Pave:	-0.0607	-0.0355	-0.0358	-0.0859	-0.0856	0.0000	0.0000	-0.0859
7	0	Pave: Pave: PT	-0.0607	-0.0355	-0.0358	-0.0859	-0.0856	0.0000	0.0000	-0.0859
7	0	Pave: Pave:	-0.0607	-0.0355	-0.0358	-0.0859	-0.0856	0.0000	0.0000	-0.0859
7	0	Pave: Pave: step	-0.0607	-0.0355	-0.0358	-0.0859	-0.0856	0.0000	0.0000	-0.0859
7	0	Open Bridge to	-0.0607	-0.0370	-0.0370	-0.0844	-0.0844	0.0000	0.0000	-0.0844
7	0	Open Bridge to	-0.0607	-0.0370	-0.0370	-0.0844	-0.0844	0.0000	0.0000	-0.0844
7	0	Open Bridge to	-0.0607	-0.0370	-0.0370	-0.0844	-0.0844	0.0000	0.0000	-0.0844
7	0	Open Bridge to	-0.0607	-0.0370	-0.0370	-0.0844	-0.0844	0.0000	0.0000	-0.0844
7	0	Open Bridge to	-0.0581	-0.0235	-0.0240	-0.0927	-0.0923	0.0000	0.0000	-0.0927
7	0	Open Bridge to	-0.0587	-0.0262	-0.0266	-0.0911	-0.0907	0.0000	0.0000	-0.0911
7	0	Partial Live Load	-0.0607	-0.0380	-0.0378	-0.0834	-0.0836	0.0000	0.0000	-0.0836
7	0	Partial Live Load	-0.0607	-0.0380	-0.0378	-0.0834	-0.0836	0.0000	0.0000	-0.0836
7	0	Partial Live Load	-0.0607	-0.0380	-0.0378	-0.0834	-0.0836	0.0000	0.0000	-0.0836
7	0	Partial Live Load	-0.0607	-0.0380	-0.0378	-0.0834	-0.0836	0.0000	0.0000	-0.0836
7	0	Partial Live Load	-0.0604	-0.0366	-0.0365	-0.0843	-0.0844	0.0000	0.0000	-0.0844
7	0	Remove Long	-0.0604	-0.0897	-0.0756	-0.0312	-0.0452	0.0000	0.0000	-0.0897

RESULT : Member Stresses

Member	Station	Result Case	(P/A) @ Centroid (kips/in²)	Normal Stress @ Point 1 (kips/in²)	Normal Stress @ Point 2 (kips/in²)	Normal Stress @ Point 3 (kips/in²)	Normal Stress @ Point 4 (kips/in²)	Normal Stress @ Point 5	Normal Stress @ Point 6	Max ABS Total Stress (kips/in²)
7	0	Remove Long	-0.0604	-0.0897	-0.0757	-0.0312	-0.0452	0.0000	0.0000	-0.0897
7	0	Remove Long	-0.0604	-0.0897	-0.0757	-0.0312	-0.0452	0.0000	0.0000	-0.0897
7	0	Remove Long	-0.0575	-0.0869	-0.0728	-0.0280	-0.0421	0.0000	0.0000	-0.0869
7	0	Remove Long	-0.0577	-0.0883	-0.0741	-0.0272	-0.0413	0.0000	0.0000	-0.0883
7	0	Long Term	-0.0577	-0.0874	-0.0735	-0.0281	-0.0420	0.0000	0.0000	-0.0874
7	0	Long Term	-0.0577	-0.0874	-0.0735	-0.0281	-0.0420	0.0000	0.0000	-0.0874
7	0	Long Term	-0.0577	-0.0874	-0.0735	-0.0281	-0.0420	0.0000	0.0000	-0.0874
7	0	Long Term	-0.0576	-0.0873	-0.0734	-0.0279	-0.0418	0.0000	0.0000	-0.0873
7	0	Long Term	-0.0555	-0.0765	-0.0630	-0.0345	-0.0481	0.0000	0.0000	-0.0765
7	0	Long Term	-0.0550	-0.0738	-0.0604	-0.0362	-0.0496	0.0000	0.0000	-0.0738
7	0	Long Term	-0.0504	-0.0718	-0.0597	-0.0289	-0.0410	0.0000	0.0000	-0.0718
7	0	Strength Check:	-0.0576	-0.0873	-0.0734	-0.0279	-0.0418	0.0000	0.0000	-0.0873
7	0	Strength Check:	-0.0576	-0.0873	-0.0734	-0.0279	-0.0418	0.0000	0.0000	-0.0873
7	0	Strength Check:	-0.0576	-0.0873	-0.0734	-0.0279	-0.0418	0.0000	0.0000	-0.0873
7	0	Strength Check:	-0.0576	-0.0873	-0.0734	-0.0279	-0.0418	0.0000	0.0000	-0.0873
7	0	Strength Check:	0.0077	-0.0259	-0.0110	0.0414	0.0264	0.0000	0.0000	0.0414
7	0	Strength Check:	-0.0504	-0.0718	-0.0597	-0.0289	-0.0410	0.0000	0.0000	-0.0718
7	1	Set Precast In	0.0000	0.0000	0.0000	0.0000	0.0000	0.0000	0.0000	0.0000
7	1	Set Precast In	0.0000	0.0041	-0.0041	-0.0041	0.0041	0.0000	0.0000	0.0041
7	1	Tension PT:	0.0000	0.0035	-0.0034	-0.0034	0.0035	0.0000	0.0000	0.0035
7	1	Tension PT:	0.0000	0.0035	-0.0034	-0.0034	0.0035	0.0000	0.0000	0.0035
7	1	Tension PT:	0.0000	0.0035	-0.0034	-0.0034	0.0035	0.0000	0.0000	0.0035
7	1	Tension PT:	0.0000	0.0035	-0.0034	-0.0034	0.0035	0.0000	0.0000	0.0035
7	1	Tension PT:	-0.0682	-0.0549	-0.0631	-0.0816	-0.0734	0.0000	0.0000	-0.0816
7	1	Add	-0.0682	-0.0549	-0.0630	-0.0815	-0.0734	0.0000	0.0000	-0.0815
7	1	Add	-0.0682	-0.0549	-0.0630	-0.0815	-0.0734	0.0000	0.0000	-0.0815
7	1	Add	-0.0682	-0.0549	-0.0630	-0.0815	-0.0734	0.0000	0.0000	-0.0815
7	1	Add	-0.0682	-0.0549	-0.0630	-0.0815	-0.0734	0.0000	0.0000	-0.0815
7	1	Add	-0.0681	-0.0512	-0.0666	-0.0851	-0.0697	0.0000	0.0000	-0.0851
7	1	Backfill to Grade:	-0.0681	-0.0527	-0.0651	-0.0836	-0.0712	0.0000	0.0000	-0.0836
7	1	Backfill to Grade:	-0.0681	-0.0527	-0.0651	-0.0836	-0.0712	0.0000	0.0000	-0.0836
7	1	Backfill to Grade:	-0.0681	-0.0527	-0.0651	-0.0836	-0.0712	0.0000	0.0000	-0.0836
7	1	Backfill to Grade:	-0.0681	-0.0527	-0.0650	-0.0835	-0.0712	0.0000	0.0000	-0.0835
7	1	Backfill to Grade:	-0.0604	-0.0313	-0.0434	-0.0896	-0.0775	0.0000	0.0000	-0.0896

RESULT : Member Stresses

Member	Station	Result Case	(P/A) @ Centroid (kips/in²)	Normal Stress @ Point 1 (kips/in²)	Normal Stress @ Point 2 (kips/in²)	Normal Stress @ Point 3 (kips/in²)	Normal Stress @ Point 4 (kips/in²)	Normal Stress @ Point 5	Normal Stress @ Point 6	Max ABS Total Stress (kips/in²)
7	1	Backfill to Grade:	-0.0584	-0.0246	-0.0370	-0.0922	-0.0798	0.0000	0.0000	-0.0922
7	1	Pave: Pave:	-0.0604	-0.0414	-0.0534	-0.0795	-0.0675	0.0000	0.0000	-0.0795
7	1	Pave: Pave:	-0.0604	-0.0414	-0.0534	-0.0795	-0.0675	0.0000	0.0000	-0.0795
7	1	Pave: Pave: PT	-0.0604	-0.0414	-0.0534	-0.0795	-0.0675	0.0000	0.0000	-0.0795
7	1	Pave: Pave:	-0.0604	-0.0414	-0.0534	-0.0795	-0.0675	0.0000	0.0000	-0.0795
7	1	Pave: Pave: step	-0.0604	-0.0408	-0.0539	-0.0801	-0.0669	0.0000	0.0000	-0.0801
7	1	Open Bridge to	-0.0604	-0.0427	-0.0555	-0.0781	-0.0653	0.0000	0.0000	-0.0781
7	1	Open Bridge to	-0.0604	-0.0427	-0.0555	-0.0781	-0.0653	0.0000	0.0000	-0.0781
7	1	Open Bridge to	-0.0604	-0.0427	-0.0555	-0.0781	-0.0653	0.0000	0.0000	-0.0781
7	1	Open Bridge to	-0.0604	-0.0427	-0.0555	-0.0781	-0.0653	0.0000	0.0000	-0.0781
7	1	Open Bridge to	-0.0579	-0.0318	-0.0500	-0.0839	-0.0657	0.0000	0.0000	-0.0839
7	1	Open Bridge to	-0.0584	-0.0340	-0.0511	-0.0828	-0.0656	0.0000	0.0000	-0.0828
7	1	Partial Live Load	-0.0604	-0.0440	-0.0566	-0.0769	-0.0642	0.0000	0.0000	-0.0769
7	1	Partial Live Load	-0.0604	-0.0440	-0.0566	-0.0769	-0.0642	0.0000	0.0000	-0.0769
7	1	Partial Live Load	-0.0604	-0.0440	-0.0566	-0.0769	-0.0642	0.0000	0.0000	-0.0769
7	1	Partial Live Load	-0.0604	-0.0440	-0.0566	-0.0769	-0.0642	0.0000	0.0000	-0.0769
7	1	Partial Live Load	-0.0602	-0.0429	-0.0561	-0.0775	-0.0643	0.0000	0.0000	-0.0775
7	1	Remove Long	-0.0602	-0.1107	-0.1099	-0.0097	-0.0105	0.0000	0.0000	-0.1107
7	1	Remove Long	-0.0602	-0.1107	-0.1099	-0.0097	-0.0105	0.0000	0.0000	-0.1107
7	1	Remove Long	-0.0602	-0.1107	-0.1099	-0.0097	-0.0105	0.0000	0.0000	-0.1107
7	1	Remove Long	-0.0572	-0.1082	-0.1073	-0.0063	-0.0071	0.0000	0.0000	-0.1082
7	1	Remove Long	-0.0575	-0.1093	-0.1079	-0.0057	-0.0071	0.0000	0.0000	-0.1093
7	1	Long Term	-0.0575	-0.1081	-0.1070	-0.0068	-0.0080	0.0000	0.0000	-0.1081
7	1	Long Term	-0.0575	-0.1081	-0.1070	-0.0068	-0.0080	0.0000	0.0000	-0.1081
7	1	Long Term	-0.0575	-0.1081	-0.1070	-0.0068	-0.0080	0.0000	0.0000	-0.1081
7	1	Long Term	-0.0573	-0.1080	-0.1069	-0.0066	-0.0078	0.0000	0.0000	-0.1080
7	1	Long Term	-0.0553	-0.0993	-0.1025	-0.0113	-0.0081	0.0000	0.0000	-0.1025
7	1	Long Term	-0.0548	-0.0971	-0.1014	-0.0124	-0.0081	0.0000	0.0000	-0.1014
7	1	Long Term	-0.0501	-0.0967	-0.1094	-0.0036	0.0092	0.0000	0.0000	-0.1094
7	1	Strength Check:	-0.0573	-0.1080	-0.1069	-0.0066	-0.0078	0.0000	0.0000	-0.1080
7	1	Strength Check:	-0.0573	-0.1080	-0.1069	-0.0066	-0.0078	0.0000	0.0000	-0.1080
7	1	Strength Check:	-0.0573	-0.1080	-0.1069	-0.0066	-0.0078	0.0000	0.0000	-0.1080
7	1	Strength Check:	-0.0573	-0.1080	-0.1069	-0.0066	-0.0078	0.0000	0.0000	-0.1080
7	1	Strength Check:	0.0078	-0.0523	-0.0500	0.0678	0.0655	0.0000	0.0000	0.0678

RESULT : Member Stresses

Member	Station	Result Case	(P/A) @ Centroid (kips/in²)	Normal Stress @ Point 1 (kips/in²)	Normal Stress @ Point 2 (kips/in²)	Normal Stress @ Point 3 (kips/in²)	Normal Stress @ Point 4 (kips/in²)	Normal Stress @ Point 5	Normal Stress @ Point 6	Max ABS Total Stress (kips/in²)
7	1	Strength Check:	-0.0501	-0.0967	-0.1094	-0.0036	0.0092	0.0000	0.0000	-0.1094
7	2	Set Precast In	0.0000	0.0000	0.0000	0.0000	0.0000	0.0000	0.0000	0.0000
7	2	Set Precast In	0.0000	0.0071	-0.0071	-0.0071	0.0071	0.0000	0.0000	0.0071
7	2	Tension PT:	0.0000	0.0065	-0.0064	-0.0064	0.0065	0.0000	0.0000	0.0065
7	2	Tension PT:	0.0000	0.0065	-0.0064	-0.0064	0.0065	0.0000	0.0000	0.0065
7	2	Tension PT:	0.0000	0.0065	-0.0064	-0.0064	0.0065	0.0000	0.0000	0.0065
7	2	Tension PT:	0.0000	0.0065	-0.0064	-0.0064	0.0065	0.0000	0.0000	0.0065
7	2	Tension PT:	-0.0680	-0.0460	-0.0603	-0.0899	-0.0756	0.0000	0.0000	-0.0899
7	2	Add	-0.0680	-0.0460	-0.0602	-0.0899	-0.0757	0.0000	0.0000	-0.0899
7	2	Add	-0.0680	-0.0460	-0.0602	-0.0899	-0.0757	0.0000	0.0000	-0.0899
7	2	Add	-0.0680	-0.0460	-0.0602	-0.0899	-0.0757	0.0000	0.0000	-0.0899
7	2	Add	-0.0679	-0.0460	-0.0602	-0.0899	-0.0756	0.0000	0.0000	-0.0899
7	2	Add	-0.0679	-0.0375	-0.0686	-0.0983	-0.0671	0.0000	0.0000	-0.0983
7	2	Backfill to Grade:	-0.0679	-0.0390	-0.0671	-0.0967	-0.0687	0.0000	0.0000	-0.0967
7	2	Backfill to Grade:	-0.0679	-0.0390	-0.0671	-0.0967	-0.0687	0.0000	0.0000	-0.0967
7	2	Backfill to Grade:	-0.0679	-0.0390	-0.0671	-0.0967	-0.0687	0.0000	0.0000	-0.0967
7	2	Backfill to Grade:	-0.0678	-0.0390	-0.0670	-0.0967	-0.0686	0.0000	0.0000	-0.0967
7	2	Backfill to Grade:	-0.0602	-0.0193	-0.0472	-0.1010	-0.0732	0.0000	0.0000	-0.1010
7	2	Backfill to Grade:	-0.0581	-0.0126	-0.0407	-0.1037	-0.0755	0.0000	0.0000	-0.1037
7	2	Pave: Pave:	-0.0602	-0.0318	-0.0595	-0.0885	-0.0608	0.0000	0.0000	-0.0885
7	2	Pave: Pave:	-0.0602	-0.0318	-0.0595	-0.0885	-0.0608	0.0000	0.0000	-0.0885
7	2	Pave: Pave: PT	-0.0602	-0.0318	-0.0595	-0.0885	-0.0608	0.0000	0.0000	-0.0885
7	2	Pave: Pave:	-0.0602	-0.0318	-0.0596	-0.0885	-0.0608	0.0000	0.0000	-0.0885
7	2	Pave: Pave: step	-0.0602	-0.0305	-0.0608	-0.0898	-0.0595	0.0000	0.0000	-0.0898
7	2	Open Bridge to	-0.0602	-0.0329	-0.0628	-0.0874	-0.0575	0.0000	0.0000	-0.0874
7	2	Open Bridge to	-0.0602	-0.0329	-0.0628	-0.0874	-0.0575	0.0000	0.0000	-0.0874
7	2	Open Bridge to	-0.0602	-0.0329	-0.0628	-0.0874	-0.0575	0.0000	0.0000	-0.0874
7	2	Open Bridge to	-0.0602	-0.0329	-0.0628	-0.0874	-0.0575	0.0000	0.0000	-0.0874
7	2	Open Bridge to	-0.0576	-0.0186	-0.0606	-0.0966	-0.0546	0.0000	0.0000	-0.0966
7	2	Open Bridge to	-0.0581	-0.0214	-0.0610	-0.0948	-0.0552	0.0000	0.0000	-0.0948
7	2	Partial Live Load	-0.0602	-0.0344	-0.0642	-0.0859	-0.0561	0.0000	0.0000	-0.0859
7	2	Partial Live Load	-0.0602	-0.0344	-0.0642	-0.0859	-0.0561	0.0000	0.0000	-0.0859
7	2	Partial Live Load	-0.0602	-0.0344	-0.0642	-0.0859	-0.0561	0.0000	0.0000	-0.0859
7	2	Partial Live Load	-0.0602	-0.0344	-0.0642	-0.0859	-0.0561	0.0000	0.0000	-0.0859

RESULT : Member Stresses

Member	Station	Result Case	(P/A) @ Centroid (kips/in²)	Normal Stress @ Point 1 (kips/in²)	Normal Stress @ Point 2 (kips/in²)	Normal Stress @ Point 3 (kips/in²)	Normal Stress @ Point 4 (kips/in²)	Normal Stress @ Point 5	Normal Stress @ Point 6	Max ABS Total Stress (kips/in²)
7	2	Partial Live Load	-0.0599	-0.0330	-0.0640	-0.0868	-0.0558	0.0000	0.0000	-0.0868
7	2	Remove Long	-0.0599	-0.1154	-0.1324	-0.0044	0.0126	0.0000	0.0000	-0.1324
7	2	Remove Long	-0.0599	-0.1154	-0.1324	-0.0044	0.0126	0.0000	0.0000	-0.1324
7	2	Remove Long	-0.0599	-0.1154	-0.1324	-0.0044	0.0126	0.0000	0.0000	-0.1324
7	2	Remove Long	-0.0570	-0.1132	-0.1301	-0.0008	0.0161	0.0000	0.0000	-0.1301
7	2	Remove Long	-0.0572	-0.1146	-0.1303	0.0001	0.0158	0.0000	0.0000	-0.1303
7	2	Long Term	-0.0572	-0.1132	-0.1292	-0.0012	0.0147	0.0000	0.0000	-0.1292
7	2	Long Term	-0.0572	-0.1132	-0.1292	-0.0012	0.0147	0.0000	0.0000	-0.1292
7	2	Long Term	-0.0572	-0.1132	-0.1292	-0.0012	0.0147	0.0000	0.0000	-0.1292
7	2	Long Term	-0.0571	-0.1131	-0.1290	-0.0010	0.0149	0.0000	0.0000	-0.1290
7	2	Long Term	-0.0550	-0.1016	-0.1273	-0.0084	0.0173	0.0000	0.0000	-0.1273
7	2	Long Term	-0.0545	-0.0988	-0.1268	-0.0102	0.0178	0.0000	0.0000	-0.1268
7	2	Long Term	-0.0498	-0.0987	-0.1448	-0.0010	0.0451	0.0000	0.0000	-0.1448
7	2	Strength Check:	-0.0571	-0.1131	-0.1290	-0.0010	0.0149	0.0000	0.0000	-0.1290
7	2	Strength Check:	-0.0571	-0.1131	-0.1290	-0.0010	0.0149	0.0000	0.0000	-0.1290
7	2	Strength Check:	-0.0571	-0.1131	-0.1290	-0.0010	0.0149	0.0000	0.0000	-0.1290
7	2	Strength Check:	-0.0571	-0.1131	-0.1290	-0.0010	0.0149	0.0000	0.0000	-0.1290
7	2	Strength Check:	0.0078	-0.0631	-0.0776	0.0786	0.0932	0.0000	0.0000	0.0932
7	2	Strength Check:	-0.0498	-0.0987	-0.1448	-0.0010	0.0451	0.0000	0.0000	-0.1448
8	0	Set Precast In	0.0000	0.0000	0.0000	0.0000	0.0000	0.0000	0.0000	0.0000
8	0	Set Precast In	0.0000	0.0071	-0.0071	-0.0071	0.0071	0.0000	0.0000	0.0071
8	0	Tension PT:	0.0000	0.0064	-0.0064	-0.0064	0.0064	0.0000	0.0000	0.0064
8	0	Tension PT:	0.0000	0.0064	-0.0064	-0.0064	0.0064	0.0000	0.0000	0.0064
8	0	Tension PT:	0.0000	0.0064	-0.0064	-0.0064	0.0064	0.0000	0.0000	0.0064
8	0	Tension PT:	0.0000	0.0064	-0.0064	-0.0064	0.0064	0.0000	0.0000	0.0064
8	0	Tension PT:	-0.0680	-0.0460	-0.0603	-0.0899	-0.0756	0.0000	0.0000	-0.0899
8	0	Add	-0.0680	-0.0460	-0.0602	-0.0899	-0.0757	0.0000	0.0000	-0.0899
8	0	Add	-0.0680	-0.0460	-0.0602	-0.0899	-0.0757	0.0000	0.0000	-0.0899
8	0	Add	-0.0680	-0.0460	-0.0602	-0.0899	-0.0757	0.0000	0.0000	-0.0899
8	0	Add	-0.0679	-0.0460	-0.0602	-0.0899	-0.0756	0.0000	0.0000	-0.0899
8	0	Add	-0.0680	-0.0376	-0.0687	-0.0984	-0.0672	0.0000	0.0000	-0.0984
8	0	Backfill to Grade:	-0.0680	-0.0391	-0.0672	-0.0968	-0.0688	0.0000	0.0000	-0.0968
8	0	Backfill to Grade:	-0.0680	-0.0391	-0.0672	-0.0968	-0.0688	0.0000	0.0000	-0.0968
8	0	Backfill to Grade:	-0.0680	-0.0391	-0.0672	-0.0968	-0.0688	0.0000	0.0000	-0.0968

RESULT : Member Stresses

Member	Station	Result Case	(P/A) @ Centroid (kips/in²)	Normal Stress @ Point 1 (kips/in²)	Normal Stress @ Point 2 (kips/in²)	Normal Stress @ Point 3 (kips/in²)	Normal Stress @ Point 4 (kips/in²)	Normal Stress @ Point 5	Normal Stress @ Point 6	Max ABS Total Stress (kips/in²)
8	0	Backfill to Grade:	-0.0679	-0.0391	-0.0671	-0.0968	-0.0687	0.0000	0.0000	-0.0968
8	0	Backfill to Grade:	-0.0603	-0.0201	-0.0479	-0.1004	-0.0726	0.0000	0.0000	-0.1004
8	0	Backfill to Grade:	-0.0582	-0.0133	-0.0415	-0.1031	-0.0750	0.0000	0.0000	-0.1031
8	0	Pave: Pave:	-0.0603	-0.0326	-0.0603	-0.0880	-0.0602	0.0000	0.0000	-0.0880
8	0	Pave: Pave:	-0.0603	-0.0326	-0.0603	-0.0880	-0.0602	0.0000	0.0000	-0.0880
8	0	Pave: Pave: PT	-0.0603	-0.0326	-0.0603	-0.0880	-0.0602	0.0000	0.0000	-0.0880
8	0	Pave: Pave:	-0.0603	-0.0326	-0.0603	-0.0880	-0.0602	0.0000	0.0000	-0.0880
8	0	Pave: Pave: step	-0.0603	-0.0313	-0.0616	-0.0892	-0.0590	0.0000	0.0000	-0.0892
8	0	Open Bridge to	-0.0603	-0.0337	-0.0636	-0.0869	-0.0570	0.0000	0.0000	-0.0869
8	0	Open Bridge to	-0.0603	-0.0337	-0.0636	-0.0869	-0.0570	0.0000	0.0000	-0.0869
8	0	Open Bridge to	-0.0603	-0.0337	-0.0636	-0.0869	-0.0570	0.0000	0.0000	-0.0869
8	0	Open Bridge to	-0.0603	-0.0337	-0.0636	-0.0869	-0.0570	0.0000	0.0000	-0.0869
8	0	Open Bridge to	-0.0578	-0.0194	-0.0614	-0.0961	-0.0541	0.0000	0.0000	-0.0961
8	0	Open Bridge to	-0.0583	-0.0222	-0.0618	-0.0943	-0.0547	0.0000	0.0000	-0.0943
8	0	Partial Live Load	-0.0603	-0.0352	-0.0650	-0.0854	-0.0556	0.0000	0.0000	-0.0854
8	0	Partial Live Load	-0.0603	-0.0352	-0.0650	-0.0854	-0.0556	0.0000	0.0000	-0.0854
8	0	Partial Live Load	-0.0603	-0.0352	-0.0650	-0.0854	-0.0556	0.0000	0.0000	-0.0854
8	0	Partial Live Load	-0.0603	-0.0352	-0.0650	-0.0854	-0.0556	0.0000	0.0000	-0.0854
8	0	Partial Live Load	-0.0600	-0.0338	-0.0648	-0.0863	-0.0553	0.0000	0.0000	-0.0863
8	0	Remove Long	-0.0600	-0.1162	-0.1331	-0.0038	0.0131	0.0000	0.0000	-0.1331
8	0	Remove Long	-0.0600	-0.1162	-0.1331	-0.0038	0.0131	0.0000	0.0000	-0.1331
8	0	Remove Long	-0.0600	-0.1162	-0.1331	-0.0038	0.0131	0.0000	0.0000	-0.1331
8	0	Remove Long	-0.0571	-0.1139	-0.1308	-0.0002	0.0167	0.0000	0.0000	-0.1308
8	0	Remove Long	-0.0573	-0.1154	-0.1311	0.0007	0.0164	0.0000	0.0000	-0.1311
8	0	Long Term	-0.0573	-0.1140	-0.1299	-0.0007	0.0153	0.0000	0.0000	-0.1299
8	0	Long Term	-0.0573	-0.1140	-0.1299	-0.0007	0.0153	0.0000	0.0000	-0.1299
8	0	Long Term	-0.0573	-0.1140	-0.1299	-0.0007	0.0153	0.0000	0.0000	-0.1299
8	0	Long Term	-0.0572	-0.1138	-0.1298	-0.0005	0.0155	0.0000	0.0000	-0.1298
8	0	Long Term	-0.0552	-0.1024	-0.1281	-0.0079	0.0177	0.0000	0.0000	-0.1281
8	0	Long Term	-0.0547	-0.0996	-0.1276	-0.0097	0.0183	0.0000	0.0000	-0.1276
8	0	Long Term	-0.0501	-0.0996	-0.1456	-0.0006	0.0455	0.0000	0.0000	-0.1456
8	0	Strength Check:	-0.0572	-0.1138	-0.1298	-0.0005	0.0155	0.0000	0.0000	-0.1298
8	0	Strength Check:	-0.0572	-0.1138	-0.1298	-0.0005	0.0155	0.0000	0.0000	-0.1298
8	0	Strength Check:	-0.0572	-0.1138	-0.1298	-0.0005	0.0155	0.0000	0.0000	-0.1298

RESULT : Member Stresses

Member	Station	Result Case	(P/A) @ Centroid (kips/in²)	Normal Stress @ Point 1 (kips/in²)	Normal Stress @ Point 2 (kips/in²)	Normal Stress @ Point 3 (kips/in²)	Normal Stress @ Point 4 (kips/in²)	Normal Stress @ Point 5	Normal Stress @ Point 6	Max ABS Total Stress (kips/in²)
8	0	Strength Check:	-0.0572	-0.1138	-0.1298	-0.0005	0.0155	0.0000	0.0000	-0.1298
8	0	Strength Check:	0.0077	-0.0638	-0.0784	0.0791	0.0937	0.0000	0.0000	0.0937
8	0	Strength Check:	-0.0501	-0.0996	-0.1456	-0.0006	0.0455	0.0000	0.0000	-0.1456
8	1	Set Precast In	0.0000	0.0000	0.0000	0.0000	0.0000	0.0000	0.0000	0.0000
8	1	Set Precast In	0.0000	0.0197	-0.0196	-0.0196	0.0197	0.0000	0.0000	0.0197
8	1	Tension PT:	0.0000	0.0193	-0.0192	-0.0192	0.0193	0.0000	0.0000	0.0193
8	1	Tension PT:	0.0000	0.0193	-0.0192	-0.0192	0.0193	0.0000	0.0000	0.0193
8	1	Tension PT:	0.0000	0.0193	-0.0192	-0.0192	0.0193	0.0000	0.0000	0.0193
8	1	Tension PT:	0.0000	0.0193	-0.0192	-0.0192	0.0193	0.0000	0.0000	0.0193
8	1	Tension PT:	-0.0666	-0.0695	-0.1192	-0.0637	-0.0140	0.0000	0.0000	-0.1192
8	1	Add	-0.0666	-0.0695	-0.1192	-0.0637	-0.0141	0.0000	0.0000	-0.1192
8	1	Add	-0.0666	-0.0695	-0.1192	-0.0637	-0.0141	0.0000	0.0000	-0.1192
8	1	Add	-0.0666	-0.0695	-0.1192	-0.0637	-0.0141	0.0000	0.0000	-0.1192
8	1	Add	-0.0666	-0.0695	-0.1191	-0.0637	-0.0140	0.0000	0.0000	-0.1191
8	1	Add	-0.0666	-0.0652	-0.1234	-0.0679	-0.0098	0.0000	0.0000	-0.1234
8	1	Backfill to Grade:	-0.0666	-0.0659	-0.1226	-0.0672	-0.0105	0.0000	0.0000	-0.1226
8	1	Backfill to Grade:	-0.0666	-0.0659	-0.1226	-0.0672	-0.0105	0.0000	0.0000	-0.1226
8	1	Backfill to Grade:	-0.0666	-0.0659	-0.1226	-0.0672	-0.0105	0.0000	0.0000	-0.1226
8	1	Backfill to Grade:	-0.0665	-0.0659	-0.1225	-0.0672	-0.0105	0.0000	0.0000	-0.1225
8	1	Backfill to Grade:	-0.0589	-0.0287	-0.0837	-0.0891	-0.0341	0.0000	0.0000	-0.0891
8	1	Backfill to Grade:	-0.0569	-0.0177	-0.0753	-0.0961	-0.0384	0.0000	0.0000	-0.0961
8	1	Pave: Pave:	-0.0589	-0.0349	-0.0899	-0.0829	-0.0279	0.0000	0.0000	-0.0899
8	1	Pave: Pave:	-0.0589	-0.0349	-0.0899	-0.0829	-0.0279	0.0000	0.0000	-0.0899
8	1	Pave: Pave: PT	-0.0589	-0.0349	-0.0899	-0.0829	-0.0279	0.0000	0.0000	-0.0899
8	1	Pave: Pave:	-0.0589	-0.0349	-0.0899	-0.0829	-0.0279	0.0000	0.0000	-0.0899
8	1	Pave: Pave: step	-0.0589	-0.0343	-0.0905	-0.0836	-0.0273	0.0000	0.0000	-0.0905
8	1	Open Bridge to	-0.0589	-0.0355	-0.0915	-0.0824	-0.0263	0.0000	0.0000	-0.0915
8	1	Open Bridge to	-0.0589	-0.0355	-0.0915	-0.0824	-0.0263	0.0000	0.0000	-0.0915
8	1	Open Bridge to	-0.0589	-0.0355	-0.0915	-0.0824	-0.0263	0.0000	0.0000	-0.0915
8	1	Open Bridge to	-0.0589	-0.0355	-0.0915	-0.0824	-0.0263	0.0000	0.0000	-0.0915
8	1	Open Bridge to	-0.0564	-0.0188	-0.0840	-0.0940	-0.0288	0.0000	0.0000	-0.0940
8	1	Open Bridge to	-0.0569	-0.0221	-0.0855	-0.0917	-0.0283	0.0000	0.0000	-0.0917
8	1	Partial Live Load	-0.0589	-0.0362	-0.0922	-0.0816	-0.0256	0.0000	0.0000	-0.0922
8	1	Partial Live Load	-0.0589	-0.0362	-0.0922	-0.0816	-0.0256	0.0000	0.0000	-0.0922

RESULT : Member Stresses

Member	Station	Result Case	(P/A) @ Centroid (kips/in²)	Normal Stress @ Point 1 (kips/in²)	Normal Stress @ Point 2 (kips/in²)	Normal Stress @ Point 3 (kips/in²)	Normal Stress @ Point 4 (kips/in²)	Normal Stress @ Point 5	Normal Stress @ Point 6	Max ABS Total Stress (kips/in²)
8	1	Partial Live Load	-0.0589	-0.0362	-0.0922	-0.0816	-0.0256	0.0000	0.0000	-0.0922
8	1	Partial Live Load	-0.0589	-0.0362	-0.0922	-0.0816	-0.0256	0.0000	0.0000	-0.0922
8	1	Partial Live Load	-0.0587	-0.0345	-0.0915	-0.0828	-0.0259	0.0000	0.0000	-0.0915
8	1	Remove Long	-0.0587	-0.0754	-0.1254	-0.0419	0.0081	0.0000	0.0000	-0.1254
8	1	Remove Long	-0.0587	-0.0754	-0.1254	-0.0419	0.0081	0.0000	0.0000	-0.1254
8	1	Remove Long	-0.0587	-0.0754	-0.1254	-0.0419	0.0081	0.0000	0.0000	-0.1254
8	1	Remove Long	-0.0557	-0.0715	-0.1211	-0.0400	0.0096	0.0000	0.0000	-0.1211
8	1	Remove Long	-0.0560	-0.0732	-0.1218	-0.0388	0.0098	0.0000	0.0000	-0.1218
8	1	Long Term	-0.0560	-0.0725	-0.1213	-0.0395	0.0093	0.0000	0.0000	-0.1213
8	1	Long Term	-0.0560	-0.0725	-0.1213	-0.0395	0.0093	0.0000	0.0000	-0.1213
8	1	Long Term	-0.0560	-0.0725	-0.1213	-0.0395	0.0093	0.0000	0.0000	-0.1213
8	1	Long Term	-0.0558	-0.0723	-0.1210	-0.0394	0.0093	0.0000	0.0000	-0.1210
8	1	Long Term	-0.0538	-0.0589	-0.1149	-0.0487	0.0073	0.0000	0.0000	-0.1149
8	1	Long Term	-0.0533	-0.0556	-0.1134	-0.0510	0.0068	0.0000	0.0000	-0.1134
8	1	Long Term	-0.0487	-0.0162	-0.0929	-0.0812	-0.0045	0.0000	0.0000	-0.0929
8	1	Strength Check:	-0.0558	-0.0723	-0.1210	-0.0394	0.0093	0.0000	0.0000	-0.1210
8	1	Strength Check:	-0.0558	-0.0723	-0.1210	-0.0394	0.0093	0.0000	0.0000	-0.1210
8	1	Strength Check:	-0.0558	-0.0723	-0.1210	-0.0394	0.0093	0.0000	0.0000	-0.1210
8	1	Strength Check:	-0.0558	-0.0723	-0.1210	-0.0394	0.0093	0.0000	0.0000	-0.1210
8	1	Strength Check:	0.0077	0.0123	-0.0258	0.0030	0.0412	0.0000	0.0000	0.0412
8	1	Strength Check:	-0.0487	-0.0162	-0.0929	-0.0812	-0.0045	0.0000	0.0000	-0.0929
8	2	Set Precast In	0.0000	0.0000	0.0000	0.0000	0.0000	0.0000	0.0000	0.0000
8	2	Set Precast In	0.0001	0.0444	-0.0442	-0.0442	0.0444	0.0000	0.0000	0.0444
8	2	Tension PT:	0.0001	0.0444	-0.0442	-0.0442	0.0444	0.0000	0.0000	0.0444
8	2	Tension PT:	0.0001	0.0444	-0.0442	-0.0442	0.0444	0.0000	0.0000	0.0444
8	2	Tension PT:	0.0001	0.0444	-0.0442	-0.0442	0.0444	0.0000	0.0000	0.0444
8	2	Tension PT:	0.0001	0.0444	-0.0442	-0.0442	0.0444	0.0000	0.0000	0.0444
8	2	Tension PT:	-0.0654	-0.0808	-0.1899	-0.0499	0.0592	0.0000	0.0000	-0.1899
8	2	Add	-0.0654	-0.0808	-0.1899	-0.0499	0.0592	0.0000	0.0000	-0.1899
8	2	Add	-0.0654	-0.0808	-0.1899	-0.0499	0.0592	0.0000	0.0000	-0.1899
8	2	Add	-0.0654	-0.0808	-0.1899	-0.0499	0.0592	0.0000	0.0000	-0.1899
8	2	Add	-0.0653	-0.0807	-0.1899	-0.0499	0.0592	0.0000	0.0000	-0.1899
8	2	Add	-0.0653	-0.0589	-0.2116	-0.0716	0.0811	0.0000	0.0000	-0.2116
8	2	Backfill to Grade:	-0.0652	-0.0589	-0.2116	-0.0716	0.0811	0.0000	0.0000	-0.2116

RESULT : Member Stresses

Member	Station	Result Case	(P/A) @ Centroid (kips/in²)	Normal Stress @ Point 1 (kips/in²)	Normal Stress @ Point 2 (kips/in²)	Normal Stress @ Point 3 (kips/in²)	Normal Stress @ Point 4 (kips/in²)	Normal Stress @ Point 5	Normal Stress @ Point 6	Max ABS Total Stress (kips/in²)
8	2	Backfill to Grade:	-0.0652	-0.0589	-0.2116	-0.0716	0.0811	0.0000	0.0000	-0.2116
8	2	Backfill to Grade:	-0.0652	-0.0589	-0.2116	-0.0716	0.0811	0.0000	0.0000	-0.2116
8	2	Backfill to Grade:	-0.0652	-0.0588	-0.2115	-0.0716	0.0811	0.0000	0.0000	-0.2115
8	2	Backfill to Grade:	-0.0576	0.2287	0.0790	-0.3440	-0.1943	0.0000	0.0000	-0.3440
8	2	Backfill to Grade:	-0.0556	0.3133	0.1587	-0.4246	-0.2700	0.0000	0.0000	-0.4246
8	2	Pave: Pave:	-0.0576	0.2287	0.0790	-0.3440	-0.1943	0.0000	0.0000	-0.3440
8	2	Pave: Pave:	-0.0576	0.2287	0.0790	-0.3440	-0.1943	0.0000	0.0000	-0.3440
8	2	Pave: Pave: PT	-0.0576	0.2287	0.0790	-0.3440	-0.1943	0.0000	0.0000	-0.3440
8	2	Pave: Pave:	-0.0577	0.2287	0.0789	-0.3440	-0.1943	0.0000	0.0000	-0.3440
8	2	Pave: Pave: step	-0.0577	0.2319	0.0757	-0.3472	-0.1910	0.0000	0.0000	-0.3472
8	2	Open Bridge to	-0.0577	0.2319	0.0757	-0.3472	-0.1910	0.0000	0.0000	-0.3472
8	2	Open Bridge to	-0.0577	0.2319	0.0757	-0.3472	-0.1910	0.0000	0.0000	-0.3472
8	2	Open Bridge to	-0.0577	0.2319	0.0757	-0.3472	-0.1910	0.0000	0.0000	-0.3472
8	2	Open Bridge to	-0.0577	0.2319	0.0757	-0.3472	-0.1910	0.0000	0.0000	-0.3472
8	2	Open Bridge to	-0.0551	0.3527	0.1604	-0.4629	-0.2706	0.0000	0.0000	-0.4629
8	2	Open Bridge to	-0.0556	0.3285	0.1435	-0.4397	-0.2547	0.0000	0.0000	-0.4397
8	2	Partial Live Load	-0.0577	0.2319	0.0757	-0.3472	-0.1910	0.0000	0.0000	-0.3472
8	2	Partial Live Load	-0.0577	0.2319	0.0757	-0.3472	-0.1910	0.0000	0.0000	-0.3472
8	2	Partial Live Load	-0.0577	0.2319	0.0757	-0.3472	-0.1910	0.0000	0.0000	-0.3472
8	2	Partial Live Load	-0.0576	0.2319	0.0757	-0.3472	-0.1910	0.0000	0.0000	-0.3472
8	2	Partial Live Load	-0.0574	0.2440	0.0842	-0.3588	-0.1990	0.0000	0.0000	-0.3588
8	2	Remove Long	-0.0574	0.2440	0.0842	-0.3588	-0.1990	0.0000	0.0000	-0.3588
8	2	Remove Long	-0.0574	0.2440	0.0842	-0.3588	-0.1990	0.0000	0.0000	-0.3588
8	2	Remove Long	-0.0574	0.2440	0.0842	-0.3588	-0.1990	0.0000	0.0000	-0.3588
8	2	Remove Long	-0.0545	0.2495	0.0906	-0.3585	-0.1996	0.0000	0.0000	-0.3585
8	2	Remove Long	-0.0548	0.2374	0.0821	-0.3469	-0.1917	0.0000	0.0000	-0.3469
8	2	Long Term	-0.0548	0.2374	0.0821	-0.3469	-0.1917	0.0000	0.0000	-0.3469
8	2	Long Term	-0.0548	0.2374	0.0821	-0.3469	-0.1917	0.0000	0.0000	-0.3469
8	2	Long Term	-0.0548	0.2374	0.0821	-0.3469	-0.1917	0.0000	0.0000	-0.3469
8	2	Long Term	-0.0546	0.2377	0.0825	-0.3469	-0.1917	0.0000	0.0000	-0.3469
8	2	Long Term	-0.0525	0.3344	0.1503	-0.4395	-0.2554	0.0000	0.0000	-0.4395
8	2	Long Term	-0.0520	0.3585	0.1672	-0.4626	-0.2713	0.0000	0.0000	-0.4626
8	2	Long Term	-0.0474	0.4580	0.2045	-0.5529	-0.2994	0.0000	0.0000	-0.5529
8	2	Strength Check:	-0.0546	0.2377	0.0825	-0.3469	-0.1917	0.0000	0.0000	-0.3469

RESULT : Member Stresses

Member	Station	Result Case	(P/A) @ Centroid (kips/in²)	Normal Stress @ Point 1 (kips/in²)	Normal Stress @ Point 2 (kips/in²)	Normal Stress @ Point 3 (kips/in²)	Normal Stress @ Point 4 (kips/in²)	Normal Stress @ Point 5	Normal Stress @ Point 6	Max ABS Total Stress (kips/in²)
8	2	Strength Check:	-0.0546	0.2377	0.0825	-0.3469	-0.1917	0.0000	0.0000	-0.3469
8	2	Strength Check:	-0.0546	0.2377	0.0825	-0.3469	-0.1917	0.0000	0.0000	-0.3469
8	2	Strength Check:	-0.0546	0.2377	0.0825	-0.3469	-0.1917	0.0000	0.0000	-0.3469
8	2	Strength Check:	0.0077	0.3570	0.2213	-0.3415	-0.2058	0.0000	0.0000	0.3570
8	2	Strength Check:	-0.0474	0.4580	0.2045	-0.5529	-0.2994	0.0000	0.0000	-0.5529
9	0	Set Precast In	0.0000	0.0000	0.0000	0.0000	0.0000	0.0000	0.0000	0.0000
9	0	Set Precast In	-0.0001	0.0439	-0.0447	-0.0441	0.0446	0.0000	0.0000	-0.0447
9	0	Tension PT:	-0.0001	0.0439	-0.0447	-0.0441	0.0446	0.0000	0.0000	-0.0447
9	0	Tension PT:	-0.0001	0.0439	-0.0447	-0.0441	0.0446	0.0000	0.0000	-0.0447
9	0	Tension PT:	-0.0001	0.0439	-0.0447	-0.0441	0.0446	0.0000	0.0000	-0.0447
9	0	Tension PT:	-0.0001	0.0439	-0.0447	-0.0441	0.0446	0.0000	0.0000	-0.0447
9	0	Tension PT:	-0.0655	-0.0813	-0.1904	-0.0498	0.0594	0.0000	0.0000	-0.1904
9	0	Add	-0.0655	-0.0813	-0.1904	-0.0498	0.0594	0.0000	0.0000	-0.1904
9	0	Add	-0.0655	-0.0813	-0.1904	-0.0498	0.0594	0.0000	0.0000	-0.1904
9	0	Add	-0.0655	-0.0813	-0.1904	-0.0498	0.0594	0.0000	0.0000	-0.1904
9	0	Add	-0.0655	-0.0812	-0.1904	-0.0498	0.0594	0.0000	0.0000	-0.1904
9	0	Add	-0.0656	-0.0595	-0.2122	-0.0716	0.0811	0.0000	0.0000	-0.2122
9	0	Backfill to Grade:	-0.0656	-0.0595	-0.2122	-0.0716	0.0811	0.0000	0.0000	-0.2122
9	0	Backfill to Grade:	-0.0656	-0.0595	-0.2122	-0.0716	0.0811	0.0000	0.0000	-0.2122
9	0	Backfill to Grade:	-0.0656	-0.0595	-0.2122	-0.0716	0.0811	0.0000	0.0000	-0.2122
9	0	Backfill to Grade:	-0.0655	-0.0594	-0.2121	-0.0716	0.0811	0.0000	0.0000	-0.2121
9	0	Backfill to Grade:	-0.0580	0.2272	0.0775	-0.3432	-0.1934	0.0000	0.0000	-0.3432
9	0	Backfill to Grade:	-0.0560	0.3118	0.1572	-0.4237	-0.2692	0.0000	0.0000	-0.4237
9	0	Pave: Pave:	-0.0580	0.2272	0.0775	-0.3432	-0.1934	0.0000	0.0000	-0.3432
9	0	Pave: Pave:	-0.0580	0.2272	0.0775	-0.3432	-0.1934	0.0000	0.0000	-0.3432
9	0	Pave: Pave: PT	-0.0580	0.2272	0.0775	-0.3432	-0.1934	0.0000	0.0000	-0.3432
9	0	Pave: Pave:	-0.0580	0.2272	0.0775	-0.3432	-0.1934	0.0000	0.0000	-0.3432
9	0	Pave: Pave: step	-0.0580	0.2304	0.0742	-0.3464	-0.1902	0.0000	0.0000	-0.3464
9	0	Open Bridge to	-0.0580	0.2304	0.0742	-0.3464	-0.1902	0.0000	0.0000	-0.3464
9	0	Open Bridge to	-0.0580	0.2304	0.0742	-0.3464	-0.1902	0.0000	0.0000	-0.3464
9	0	Open Bridge to	-0.0580	0.2304	0.0742	-0.3464	-0.1902	0.0000	0.0000	-0.3464
9	0	Open Bridge to	-0.0580	0.2304	0.0742	-0.3464	-0.1902	0.0000	0.0000	-0.3464
9	0	Open Bridge to	-0.0555	0.3511	0.1589	-0.4622	-0.2699	0.0000	0.0000	-0.4622
9	0	Open Bridge to	-0.0560	0.3270	0.1419	-0.4390	-0.2540	0.0000	0.0000	-0.4390

RESULT : Member Stresses

Member	Station	Result Case	(P/A) @ Centroid (kips/in²)	Normal Stress @ Point 1 (kips/in²)	Normal Stress @ Point 2 (kips/in²)	Normal Stress @ Point 3 (kips/in²)	Normal Stress @ Point 4 (kips/in²)	Normal Stress @ Point 5	Normal Stress @ Point 6	Max ABS Total Stress (kips/in²)
9	0	Partial Live Load	-0.0580	0.2304	0.0742	-0.3464	-0.1902	0.0000	0.0000	-0.3464
9	0	Partial Live Load	-0.0580	0.2304	0.0742	-0.3464	-0.1902	0.0000	0.0000	-0.3464
9	0	Partial Live Load	-0.0580	0.2304	0.0742	-0.3464	-0.1902	0.0000	0.0000	-0.3464
9	0	Partial Live Load	-0.0580	0.2304	0.0742	-0.3464	-0.1902	0.0000	0.0000	-0.3464
9	0	Partial Live Load	-0.0577	0.2425	0.0827	-0.3580	-0.1982	0.0000	0.0000	-0.3580
9	0	Remove Long	-0.0577	0.2425	0.0827	-0.3580	-0.1982	0.0000	0.0000	-0.3580
9	0	Remove Long	-0.0577	0.2425	0.0827	-0.3580	-0.1982	0.0000	0.0000	-0.3580
9	0	Remove Long	-0.0577	0.2425	0.0827	-0.3580	-0.1982	0.0000	0.0000	-0.3580
9	0	Remove Long	-0.0549	0.2480	0.0891	-0.3577	-0.1988	0.0000	0.0000	-0.3577
9	0	Remove Long	-0.0551	0.2359	0.0807	-0.3461	-0.1909	0.0000	0.0000	-0.3461
9	0	Long Term	-0.0551	0.2359	0.0807	-0.3461	-0.1909	0.0000	0.0000	-0.3461
9	0	Long Term	-0.0551	0.2359	0.0807	-0.3461	-0.1909	0.0000	0.0000	-0.3461
9	0	Long Term	-0.0551	0.2359	0.0807	-0.3461	-0.1909	0.0000	0.0000	-0.3461
9	0	Long Term	-0.0549	0.2363	0.0810	-0.3461	-0.1909	0.0000	0.0000	-0.3461
9	0	Long Term	-0.0530	0.3328	0.1487	-0.4388	-0.2547	0.0000	0.0000	-0.4388
9	0	Long Term	-0.0525	0.3569	0.1657	-0.4619	-0.2706	0.0000	0.0000	-0.4619
9	0	Long Term	-0.0480	0.4562	0.2027	-0.5523	-0.2988	0.0000	0.0000	-0.5523
9	0	Strength Check:	-0.0549	0.2363	0.0810	-0.3461	-0.1909	0.0000	0.0000	-0.3461
9	0	Strength Check:	-0.0549	0.2363	0.0810	-0.3461	-0.1909	0.0000	0.0000	-0.3461
9	0	Strength Check:	-0.0549	0.2363	0.0810	-0.3461	-0.1909	0.0000	0.0000	-0.3461
9	0	Strength Check:	-0.0549	0.2363	0.0810	-0.3461	-0.1909	0.0000	0.0000	-0.3461
9	0	Strength Check:	0.0074	0.3555	0.2198	-0.3407	-0.2050	0.0000	0.0000	0.3555
9	0	Strength Check:	-0.0480	0.4562	0.2027	-0.5523	-0.2988	0.0000	0.0000	-0.5523
9	1	Set Precast In	0.0000	0.0000	0.0000	0.0000	0.0000	0.0000	0.0000	0.0000
9	1	Set Precast In	-0.0001	0.0218	-0.0226	-0.0219	0.0225	0.0000	0.0000	-0.0226
9	1	Tension PT:	-0.0001	0.0218	-0.0226	-0.0219	0.0225	0.0000	0.0000	-0.0226
9	1	Tension PT:	-0.0001	0.0218	-0.0226	-0.0219	0.0225	0.0000	0.0000	-0.0226
9	1	Tension PT:	-0.0001	0.0218	-0.0226	-0.0219	0.0225	0.0000	0.0000	-0.0226
9	1	Tension PT:	-0.0001	0.0218	-0.0226	-0.0219	0.0225	0.0000	0.0000	-0.0226
9	1	Tension PT:	-0.0647	-0.1011	-0.1675	-0.0284	0.0380	0.0000	0.0000	-0.1675
9	1	Add	-0.0647	-0.1011	-0.1675	-0.0284	0.0380	0.0000	0.0000	-0.1675
9	1	Add	-0.0647	-0.1011	-0.1675	-0.0284	0.0380	0.0000	0.0000	-0.1675
9	1	Add	-0.0647	-0.1011	-0.1675	-0.0284	0.0380	0.0000	0.0000	-0.1675
9	1	Add	-0.0647	-0.1010	-0.1674	-0.0284	0.0380	0.0000	0.0000	-0.1674

RESULT : Member Stresses

Member	Station	Result Case	(P/A) @ Centroid (kips/in²)	Normal Stress @ Point 1 (kips/in²)	Normal Stress @ Point 2 (kips/in²)	Normal Stress @ Point 3 (kips/in²)	Normal Stress @ Point 4 (kips/in²)	Normal Stress @ Point 5	Normal Stress @ Point 6	Max ABS Total Stress (kips/in²)
9	1	Add	-0.0647	-0.0956	-0.1728	-0.0339	0.0433	0.0000	0.0000	-0.1728
9	1	Backfill to Grade:	-0.0647	-0.0956	-0.1728	-0.0339	0.0433	0.0000	0.0000	-0.1728
9	1	Backfill to Grade:	-0.0647	-0.0956	-0.1728	-0.0339	0.0433	0.0000	0.0000	-0.1728
9	1	Backfill to Grade:	-0.0647	-0.0956	-0.1728	-0.0339	0.0433	0.0000	0.0000	-0.1728
9	1	Backfill to Grade:	-0.0647	-0.0956	-0.1727	-0.0339	0.0433	0.0000	0.0000	-0.1727
9	1	Backfill to Grade:	-0.0572	0.0330	-0.0410	-0.1473	-0.0733	0.0000	0.0000	-0.1473
9	1	Backfill to Grade:	-0.0552	0.0708	-0.0079	-0.1812	-0.1024	0.0000	0.0000	-0.1812
9	1	Pave: Pave:	-0.0572	0.0330	-0.0410	-0.1473	-0.0733	0.0000	0.0000	-0.1473
9	1	Pave: Pave:	-0.0572	0.0330	-0.0410	-0.1473	-0.0733	0.0000	0.0000	-0.1473
9	1	Pave: Pave: PT	-0.0572	0.0330	-0.0410	-0.1473	-0.0733	0.0000	0.0000	-0.1473
9	1	Pave: Pave:	-0.0572	0.0329	-0.0411	-0.1473	-0.0733	0.0000	0.0000	-0.1473
9	1	Pave: Pave: step	-0.0572	0.0337	-0.0419	-0.1481	-0.0725	0.0000	0.0000	-0.1481
9	1	Open Bridge to	-0.0572	0.0337	-0.0419	-0.1481	-0.0725	0.0000	0.0000	-0.1481
9	1	Open Bridge to	-0.0572	0.0337	-0.0419	-0.1481	-0.0725	0.0000	0.0000	-0.1481
9	1	Open Bridge to	-0.0572	0.0337	-0.0419	-0.1481	-0.0725	0.0000	0.0000	-0.1481
9	1	Open Bridge to	-0.0572	0.0337	-0.0419	-0.1481	-0.0725	0.0000	0.0000	-0.1481
9	1	Open Bridge to	-0.0547	0.0847	-0.0042	-0.1942	-0.1052	0.0000	0.0000	-0.1942
9	1	Open Bridge to	-0.0552	0.0745	-0.0118	-0.1850	-0.0987	0.0000	0.0000	-0.1850
9	1	Partial Live Load	-0.0572	0.0337	-0.0419	-0.1481	-0.0725	0.0000	0.0000	-0.1481
9	1	Partial Live Load	-0.0572	0.0337	-0.0419	-0.1481	-0.0725	0.0000	0.0000	-0.1481
9	1	Partial Live Load	-0.0572	0.0337	-0.0419	-0.1481	-0.0725	0.0000	0.0000	-0.1481
9	1	Partial Live Load	-0.0572	0.0337	-0.0419	-0.1481	-0.0725	0.0000	0.0000	-0.1481
9	1	Partial Live Load	-0.0570	0.0388	-0.0381	-0.1527	-0.0758	0.0000	0.0000	-0.1527
9	1	Remove Long	-0.0570	0.0388	-0.0381	-0.1527	-0.0758	0.0000	0.0000	-0.1527
9	1	Remove Long	-0.0570	0.0388	-0.0381	-0.1527	-0.0758	0.0000	0.0000	-0.1527
9	1	Remove Long	-0.0570	0.0388	-0.0381	-0.1527	-0.0758	0.0000	0.0000	-0.1527
9	1	Remove Long	-0.0541	0.0443	-0.0317	-0.1525	-0.0765	0.0000	0.0000	-0.1525
9	1	Remove Long	-0.0543	0.0392	-0.0355	-0.1479	-0.0732	0.0000	0.0000	-0.1479
9	1	Long Term	-0.0543	0.0392	-0.0355	-0.1479	-0.0732	0.0000	0.0000	-0.1479
9	1	Long Term	-0.0543	0.0392	-0.0355	-0.1479	-0.0732	0.0000	0.0000	-0.1479
9	1	Long Term	-0.0543	0.0392	-0.0355	-0.1479	-0.0732	0.0000	0.0000	-0.1479
9	1	Long Term	-0.0542	0.0395	-0.0351	-0.1478	-0.0733	0.0000	0.0000	-0.1478
9	1	Long Term	-0.0522	0.0803	-0.0050	-0.1847	-0.0994	0.0000	0.0000	-0.1847
9	1	Long Term	-0.0517	0.0905	0.0026	-0.1939	-0.1060	0.0000	0.0000	-0.1939

RESULT : Member Stresses

Member	Station	Result Case	(P/A) @ Centroid (kips/in²)	Normal Stress @ Point 1 (kips/in²)	Normal Stress @ Point 2 (kips/in²)	Normal Stress @ Point 3 (kips/in²)	Normal Stress @ Point 4 (kips/in²)	Normal Stress @ Point 5	Normal Stress @ Point 6	Max ABS Total Stress (kips/in²)
9	1	Long Term	-0.0473	0.1618	0.0504	-0.2563	-0.1449	0.0000	0.0000	-0.2563
9	1	Strength Check:	-0.0542	0.0395	-0.0351	-0.1478	-0.0733	0.0000	0.0000	-0.1478
9	1	Strength Check:	-0.0542	0.0395	-0.0351	-0.1478	-0.0733	0.0000	0.0000	-0.1478
9	1	Strength Check:	-0.0542	0.0395	-0.0351	-0.1478	-0.0733	0.0000	0.0000	-0.1478
9	1	Strength Check:	-0.0542	0.0395	-0.0351	-0.1478	-0.0733	0.0000	0.0000	-0.1478
9	1	Strength Check:	0.0074	0.1565	0.1029	-0.1416	-0.0880	0.0000	0.0000	0.1565
9	1	Strength Check:	-0.0473	0.1618	0.0504	-0.2563	-0.1449	0.0000	0.0000	-0.2563
9	2	Set Precast In	0.0000	0.0000	0.0000	0.0000	0.0000	0.0000	0.0000	0.0000
9	2	Set Precast In	0.0000	0.0064	-0.0071	-0.0064	0.0070	0.0000	0.0000	-0.0071
9	2	Tension PT:	0.0000	0.0064	-0.0071	-0.0064	0.0070	0.0000	0.0000	-0.0071
9	2	Tension PT:	0.0000	0.0064	-0.0071	-0.0064	0.0070	0.0000	0.0000	-0.0071
9	2	Tension PT:	0.0000	0.0064	-0.0071	-0.0064	0.0070	0.0000	0.0000	-0.0071
9	2	Tension PT:	0.0000	0.0064	-0.0071	-0.0064	0.0070	0.0000	0.0000	-0.0071
9	2	Tension PT:	-0.0639	-0.1141	-0.1510	-0.0136	0.0233	0.0000	0.0000	-0.1510
9	2	Add	-0.0639	-0.1141	-0.1510	-0.0136	0.0233	0.0000	0.0000	-0.1510
9	2	Add	-0.0639	-0.1141	-0.1510	-0.0136	0.0233	0.0000	0.0000	-0.1510
9	2	Add	-0.0639	-0.1141	-0.1510	-0.0136	0.0233	0.0000	0.0000	-0.1510
9	2	Add	-0.0638	-0.1140	-0.1510	-0.0136	0.0233	0.0000	0.0000	-0.1510
9	2	Add	-0.0638	-0.1140	-0.1510	-0.0136	0.0233	0.0000	0.0000	-0.1510
9	2	Backfill to Grade:	-0.0638	-0.1140	-0.1510	-0.0136	0.0233	0.0000	0.0000	-0.1510
9	2	Backfill to Grade:	-0.0638	-0.1140	-0.1510	-0.0136	0.0233	0.0000	0.0000	-0.1510
9	2	Backfill to Grade:	-0.0638	-0.1140	-0.1510	-0.0136	0.0233	0.0000	0.0000	-0.1510
9	2	Backfill to Grade:	-0.0638	-0.1140	-0.1509	-0.0136	0.0233	0.0000	0.0000	-0.1509
9	2	Backfill to Grade:	-0.0563	-0.0302	-0.0637	-0.0824	-0.0489	0.0000	0.0000	-0.0824
9	2	Backfill to Grade:	-0.0543	-0.0052	-0.0434	-0.1034	-0.0652	0.0000	0.0000	-0.1034
9	2	Pave: Pave:	-0.0563	-0.0302	-0.0637	-0.0824	-0.0489	0.0000	0.0000	-0.0824
9	2	Pave: Pave:	-0.0563	-0.0302	-0.0637	-0.0824	-0.0489	0.0000	0.0000	-0.0824
9	2	Pave: Pave: PT	-0.0563	-0.0302	-0.0637	-0.0824	-0.0489	0.0000	0.0000	-0.0824
9	2	Pave: Pave:	-0.0563	-0.0302	-0.0637	-0.0824	-0.0489	0.0000	0.0000	-0.0824
9	2	Pave: Pave: step	-0.0563	-0.0302	-0.0637	-0.0824	-0.0489	0.0000	0.0000	-0.0824
9	2	Open Bridge to	-0.0563	-0.0302	-0.0637	-0.0824	-0.0489	0.0000	0.0000	-0.0824
9	2	Open Bridge to	-0.0563	-0.0302	-0.0637	-0.0824	-0.0489	0.0000	0.0000	-0.0824
9	2	Open Bridge to	-0.0563	-0.0302	-0.0637	-0.0824	-0.0489	0.0000	0.0000	-0.0824
9	2	Open Bridge to	-0.0563	-0.0302	-0.0637	-0.0824	-0.0489	0.0000	0.0000	-0.0824

RESULT : Member Stresses

Member	Station	Result Case	(P/A) @ Centroid (kips/in²)	Normal Stress @ Point 1 (kips/in²)	Normal Stress @ Point 2 (kips/in²)	Normal Stress @ Point 3 (kips/in²)	Normal Stress @ Point 4 (kips/in²)	Normal Stress @ Point 5	Normal Stress @ Point 6	Max ABS Total Stress (kips/in²)
9	2	Open Bridge to	-0.0538	0.0010	-0.0383	-0.1087	-0.0693	0.0000	0.0000	-0.1087
9	2	Open Bridge to	-0.0543	-0.0052	-0.0434	-0.1034	-0.0652	0.0000	0.0000	-0.1034
9	2	Partial Live Load	-0.0563	-0.0302	-0.0637	-0.0824	-0.0489	0.0000	0.0000	-0.0824
9	2	Partial Live Load	-0.0563	-0.0302	-0.0637	-0.0824	-0.0489	0.0000	0.0000	-0.0824
9	2	Partial Live Load	-0.0563	-0.0302	-0.0637	-0.0824	-0.0489	0.0000	0.0000	-0.0824
9	2	Partial Live Load	-0.0563	-0.0302	-0.0637	-0.0824	-0.0489	0.0000	0.0000	-0.0824
9	2	Partial Live Load	-0.0561	-0.0271	-0.0612	-0.0851	-0.0509	0.0000	0.0000	-0.0851
9	2	Remove Long	-0.0561	-0.0271	-0.0612	-0.0851	-0.0509	0.0000	0.0000	-0.0851
9	2	Remove Long	-0.0561	-0.0271	-0.0612	-0.0851	-0.0509	0.0000	0.0000	-0.0851
9	2	Remove Long	-0.0561	-0.0271	-0.0612	-0.0851	-0.0509	0.0000	0.0000	-0.0851
9	2	Remove Long	-0.0531	-0.0214	-0.0545	-0.0847	-0.0517	0.0000	0.0000	-0.0847
9	2	Remove Long	-0.0533	-0.0246	-0.0570	-0.0821	-0.0496	0.0000	0.0000	-0.0821
9	2	Long Term	-0.0533	-0.0246	-0.0570	-0.0821	-0.0496	0.0000	0.0000	-0.0821
9	2	Long Term	-0.0533	-0.0246	-0.0570	-0.0821	-0.0496	0.0000	0.0000	-0.0821
9	2	Long Term	-0.0533	-0.0246	-0.0570	-0.0821	-0.0496	0.0000	0.0000	-0.0821
9	2	Long Term	-0.0532	-0.0243	-0.0567	-0.0821	-0.0497	0.0000	0.0000	-0.0821
9	2	Long Term	-0.0512	0.0006	-0.0364	-0.1031	-0.0660	0.0000	0.0000	-0.1031
9	2	Long Term	-0.0507	0.0069	-0.0313	-0.1083	-0.0701	0.0000	0.0000	-0.1083
9	2	Long Term	-0.0463	0.0612	0.0164	-0.1537	-0.1090	0.0000	0.0000	-0.1537
9	2	Strength Check:	-0.0532	-0.0243	-0.0567	-0.0821	-0.0497	0.0000	0.0000	-0.0821
9	2	Strength Check:	-0.0532	-0.0243	-0.0567	-0.0821	-0.0497	0.0000	0.0000	-0.0821
9	2	Strength Check:	-0.0532	-0.0243	-0.0567	-0.0821	-0.0497	0.0000	0.0000	-0.0821
9	2	Strength Check:	-0.0532	-0.0243	-0.0567	-0.0821	-0.0497	0.0000	0.0000	-0.0821
9	2	Strength Check:	0.0075	0.0902	0.0801	-0.0753	-0.0652	0.0000	0.0000	0.0902
9	2	Strength Check:	-0.0463	0.0612	0.0164	-0.1537	-0.1090	0.0000	0.0000	-0.1537
10	0	Set Precast In	0.0000	0.0000	0.0000	0.0000	0.0000	0.0000	0.0000	0.0000
10	0	Set Precast In	0.0000	0.0238	-0.0238	-0.0238	0.0238	0.0000	0.0000	0.0238
10	0	Tension PT:	0.0000	0.0238	-0.0238	-0.0238	0.0238	0.0000	0.0000	0.0238
10	0	Tension PT:	0.0000	0.0238	-0.0238	-0.0238	0.0238	0.0000	0.0000	-0.0238
10	0	Tension PT:	0.0000	0.0238	-0.0238	-0.0238	0.0238	0.0000	0.0000	-0.0238
10	0	Tension PT:	0.0000	0.0238	-0.0238	-0.0238	0.0238	0.0000	0.0000	0.0238
10	0	Tension PT:	-0.0367	-0.2453	-0.3642	0.1719	0.2908	0.0000	0.0000	-0.3642
10	0	Add	-0.0367	-0.2453	-0.3642	0.1719	0.2908	0.0000	0.0000	-0.3642
10	0	Add	-0.0367	-0.2453	-0.3642	0.1719	0.2908	0.0000	0.0000	-0.3642

RESULT : Member Stresses

Member	Station	Result Case	(P/A) @ Centroid (kips/in²)	Normal Stress @ Point 1 (kips/in²)	Normal Stress @ Point 2 (kips/in²)	Normal Stress @ Point 3 (kips/in²)	Normal Stress @ Point 4 (kips/in²)	Normal Stress @ Point 5	Normal Stress @ Point 6	Max ABS Total Stress (kips/in²)
10	0	Add	-0.0367	-0.2453	-0.3642	0.1719	0.2908	0.0000	0.0000	-0.3642
10	0	Add	-0.0367	-0.2452	-0.3640	0.1718	0.2907	0.0000	0.0000	-0.3640
10	0	Add	-0.0367	-0.2452	-0.3640	0.1718	0.2907	0.0000	0.0000	-0.3640
10	0	Backfill to Grade:	-0.0367	-0.2452	-0.3640	0.1718	0.2907	0.0000	0.0000	-0.3640
10	0	Backfill to Grade:	-0.0367	-0.2452	-0.3640	0.1718	0.2907	0.0000	0.0000	-0.3640
10	0	Backfill to Grade:	-0.0367	-0.2452	-0.3640	0.1718	0.2907	0.0000	0.0000	-0.3640
10	0	Backfill to Grade:	-0.0366	-0.2450	-0.3638	0.1717	0.2906	0.0000	0.0000	-0.3638
10	0	Backfill to Grade:	-0.0366	0.0608	-0.0581	-0.1340	-0.0152	0.0000	0.0000	-0.1340
10	0	Backfill to Grade:	-0.0366	0.1417	0.0228	-0.2149	-0.0961	0.0000	0.0000	-0.2149
10	0	Pave: Pave:	-0.0366	0.0608	-0.0581	-0.1340	-0.0152	0.0000	0.0000	-0.1340
10	0	Pave: Pave:	-0.0366	0.0608	-0.0581	-0.1340	-0.0152	0.0000	0.0000	-0.1340
10	0	Pave: Pave: PT	-0.0366	0.0608	-0.0581	-0.1340	-0.0152	0.0000	0.0000	-0.1340
10	0	Pave: Pave:	-0.0366	0.0607	-0.0581	-0.1340	-0.0152	0.0000	0.0000	-0.1340
10	0	Pave: Pave: step	-0.0366	0.0607	-0.0581	-0.1340	-0.0152	0.0000	0.0000	-0.1340
10	0	Open Bridge to	-0.0366	0.0607	-0.0581	-0.1340	-0.0152	0.0000	0.0000	-0.1340
10	0	Open Bridge to	-0.0366	0.0607	-0.0581	-0.1340	-0.0152	0.0000	0.0000	-0.1340
10	0	Open Bridge to	-0.0366	0.0607	-0.0581	-0.1340	-0.0152	0.0000	0.0000	-0.1340
10	0	Open Bridge to	-0.0366	0.0608	-0.0581	-0.1340	-0.0152	0.0000	0.0000	-0.1340
10	0	Open Bridge to	-0.0366	0.1619	0.0430	-0.2351	-0.1163	0.0000	0.0000	-0.2351
10	0	Open Bridge to	-0.0366	0.1416	0.0228	-0.2149	-0.0961	0.0000	0.0000	-0.2149
10	0	Partial Live Load	-0.0366	0.0608	-0.0581	-0.1340	-0.0152	0.0000	0.0000	-0.1340
10	0	Partial Live Load	-0.0366	0.0608	-0.0581	-0.1340	-0.0152	0.0000	0.0000	-0.1340
10	0	Partial Live Load	-0.0366	0.0608	-0.0581	-0.1340	-0.0152	0.0000	0.0000	-0.1340
10	0	Partial Live Load	-0.0366	0.0608	-0.0581	-0.1340	-0.0152	0.0000	0.0000	-0.1340
10	0	Partial Live Load	-0.0366	0.0709	-0.0480	-0.1442	-0.0253	0.0000	0.0000	-0.1442
10	0	Remove Long	-0.0366	0.0709	-0.0480	-0.1442	-0.0253	0.0000	0.0000	-0.1442
10	0	Remove Long	-0.0366	0.0709	-0.0480	-0.1442	-0.0253	0.0000	0.0000	-0.1442
10	0	Remove Long	-0.0366	0.0709	-0.0480	-0.1442	-0.0253	0.0000	0.0000	-0.1442
10	0	Remove Long	-0.0349	0.0834	-0.0321	-0.1533	-0.0378	0.0000	0.0000	-0.1533
10	0	Remove Long	-0.0349	0.0733	-0.0422	-0.1432	-0.0277	0.0000	0.0000	-0.1432
10	0	Long Term	-0.0349	0.0733	-0.0422	-0.1432	-0.0277	0.0000	0.0000	-0.1432
10	0	Long Term	-0.0349	0.0733	-0.0422	-0.1432	-0.0277	0.0000	0.0000	-0.1432
10	0	Long Term	-0.0349	0.0733	-0.0422	-0.1432	-0.0277	0.0000	0.0000	-0.1432
10	0	Long Term	-0.0349	0.0738	-0.0415	-0.1435	-0.0282	0.0000	0.0000	-0.1435

RESULT : Member Stresses

Member	Station	Result Case	(P/A) @ Centroid (kips/in²)	Normal Stress @ Point 1 (kips/in²)	Normal Stress @ Point 2 (kips/in²)	Normal Stress @ Point 3 (kips/in²)	Normal Stress @ Point 4 (kips/in²)	Normal Stress @ Point 5	Normal Stress @ Point 6	Max ABS Total Stress (kips/in²)
10	0	Long Term	-0.0349	0.1547	0.0393	-0.2244	-0.1091	0.0000	0.0000	-0.2244
10	0	Long Term	-0.0349	0.1749	0.0596	-0.2447	-0.1293	0.0000	0.0000	-0.2447
10	0	Long Term	-0.0349	0.3638	0.2365	-0.4335	-0.3062	0.0000	0.0000	-0.4335
10	0	Strength Check:	-0.0349	0.0738	-0.0415	-0.1435	-0.0282	0.0000	0.0000	-0.1435
10	0	Strength Check:	-0.0349	0.0738	-0.0415	-0.1435	-0.0282	0.0000	0.0000	-0.1435
10	0	Strength Check:	-0.0349	0.0738	-0.0415	-0.1435	-0.0282	0.0000	0.0000	-0.1435
10	0	Strength Check:	-0.0349	0.0738	-0.0415	-0.1435	-0.0282	0.0000	0.0000	-0.1435
10	0	Strength Check:	0.0000	0.3296	0.2820	-0.3296	-0.2820	0.0000	0.0000	0.3296
10	0	Strength Check:	-0.0349	0.3638	0.2365	-0.4335	-0.3062	0.0000	0.0000	-0.4335
10	1	Set Precast In	0.0000	0.0000	0.0000	0.0000	0.0000	0.0000	0.0000	0.0000
10	1	Set Precast In	0.0000	0.0059	-0.0059	-0.0059	0.0059	0.0000	0.0000	0.0059
10	1	Tension PT:	0.0000	0.0059	-0.0059	-0.0059	0.0059	0.0000	0.0000	0.0059
10	1	Tension PT:	0.0000	0.0059	-0.0059	-0.0059	0.0059	0.0000	0.0000	-0.0059
10	1	Tension PT:	0.0000	0.0059	-0.0059	-0.0059	0.0059	0.0000	0.0000	-0.0059
10	1	Tension PT:	0.0000	0.0059	-0.0059	-0.0059	0.0059	0.0000	0.0000	0.0059
10	1	Tension PT:	0.0000	0.0059	-0.0059	-0.0059	0.0059	0.0000	0.0000	-0.0059
10	1	Add	0.0000	0.0059	-0.0059	-0.0059	0.0059	0.0000	0.0000	-0.0059
10	1	Add	0.0000	0.0059	-0.0059	-0.0059	0.0059	0.0000	0.0000	-0.0059
10	1	Add	0.0000	0.0059	-0.0059	-0.0059	0.0059	0.0000	0.0000	-0.0059
10	1	Add	0.0000	0.0059	-0.0059	-0.0059	0.0059	0.0000	0.0000	-0.0059
10	1	Add	0.0000	0.0059	-0.0059	-0.0059	0.0059	0.0000	0.0000	-0.0059
10	1	Backfill to Grade:	0.0000	0.0059	-0.0059	-0.0059	0.0059	0.0000	0.0000	-0.0059
10	1	Backfill to Grade:	0.0000	0.0059	-0.0059	-0.0059	0.0059	0.0000	0.0000	-0.0059
10	1	Backfill to Grade:	0.0000	0.0059	-0.0059	-0.0059	0.0059	0.0000	0.0000	-0.0059
10	1	Backfill to Grade:	0.0000	0.0059	-0.0059	-0.0059	0.0059	0.0000	0.0000	-0.0059
10	1	Backfill to Grade:	0.0000	0.0853	0.0734	-0.0853	-0.0734	0.0000	0.0000	-0.0853
10	1	Backfill to Grade:	0.0000	0.1062	0.0943	-0.1062	-0.0943	0.0000	0.0000	-0.1062
10	1	Pave: Pave:	0.0000	0.0853	0.0734	-0.0853	-0.0734	0.0000	0.0000	-0.0853
10	1	Pave: Pave:	0.0000	0.0853	0.0734	-0.0853	-0.0734	0.0000	0.0000	-0.0853
10	1	Pave: Pave: PT	0.0000	0.0853	0.0734	-0.0853	-0.0734	0.0000	0.0000	-0.0853
10	1	Pave: Pave:	0.0000	0.0853	0.0734	-0.0853	-0.0734	0.0000	0.0000	-0.0853
10	1	Pave: Pave: step	0.0000	0.0853	0.0734	-0.0853	-0.0734	0.0000	0.0000	-0.0853
10	1	Open Bridge to	0.0000	0.0853	0.0734	-0.0853	-0.0734	0.0000	0.0000	-0.0853
10	1	Open Bridge to	0.0000	0.0853	0.0734	-0.0853	-0.0734	0.0000	0.0000	-0.0853

RESULT : Member Stresses

Member	Station	Result Case	(P/A) @ Centroid (kips/in²)	Normal Stress @ Point 1 (kips/in²)	Normal Stress @ Point 2 (kips/in²)	Normal Stress @ Point 3 (kips/in²)	Normal Stress @ Point 4 (kips/in²)	Normal Stress @ Point 5	Normal Stress @ Point 6	Max ABS Total Stress (kips/in²)
10	1	Open Bridge to	0.0000	0.0853	0.0734	-0.0853	-0.0734	0.0000	0.0000	-0.0853
10	1	Open Bridge to	0.0000	0.0853	0.0734	-0.0853	-0.0734	0.0000	0.0000	-0.0853
10	1	Open Bridge to	0.0000	0.1115	0.0996	-0.1115	-0.0996	0.0000	0.0000	-0.1115
10	1	Open Bridge to	0.0000	0.1062	0.0943	-0.1062	-0.0943	0.0000	0.0000	-0.1062
10	1	Partial Live Load	0.0000	0.0853	0.0734	-0.0853	-0.0734	0.0000	0.0000	-0.0853
10	1	Partial Live Load	0.0000	0.0853	0.0734	-0.0853	-0.0734	0.0000	0.0000	-0.0853
10	1	Partial Live Load	0.0000	0.0853	0.0734	-0.0853	-0.0734	0.0000	0.0000	-0.0853
10	1	Partial Live Load	0.0000	0.0853	0.0734	-0.0853	-0.0734	0.0000	0.0000	-0.0853
10	1	Partial Live Load	0.0000	0.0879	0.0760	-0.0879	-0.0760	0.0000	0.0000	-0.0879
10	1	Remove Long	0.0000	0.0879	0.0760	-0.0879	-0.0760	0.0000	0.0000	-0.0879
10	1	Remove Long	0.0000	0.0879	0.0760	-0.0879	-0.0760	0.0000	0.0000	-0.0879
10	1	Remove Long	0.0000	0.0879	0.0760	-0.0879	-0.0760	0.0000	0.0000	-0.0879
10	1	Remove Long	0.0000	0.0879	0.0760	-0.0879	-0.0760	0.0000	0.0000	-0.0879
10	1	Remove Long	0.0000	0.0853	0.0734	-0.0853	-0.0734	0.0000	0.0000	-0.0853
10	1	Long Term	0.0000	0.0853	0.0734	-0.0853	-0.0734	0.0000	0.0000	-0.0853
10	1	Long Term	0.0000	0.0853	0.0734	-0.0853	-0.0734	0.0000	0.0000	-0.0853
10	1	Long Term	0.0000	0.0853	0.0734	-0.0853	-0.0734	0.0000	0.0000	-0.0853
10	1	Long Term	0.0000	0.0853	0.0734	-0.0853	-0.0734	0.0000	0.0000	0.0853
10	1	Long Term	0.0000	0.1062	0.0943	-0.1062	-0.0943	0.0000	0.0000	0.1062
10	1	Long Term	0.0000	0.1115	0.0996	-0.1115	-0.0996	0.0000	0.0000	0.1115
10	1	Long Term	0.0000	0.1604	0.1455	-0.1604	-0.1455	0.0000	0.0000	0.1604
10	1	Strength Check:	0.0000	0.0853	0.0734	-0.0853	-0.0734	0.0000	0.0000	0.0853
10	1	Strength Check:	0.0000	0.0853	0.0734	-0.0853	-0.0734	0.0000	0.0000	0.0853
10	1	Strength Check:	0.0000	0.0853	0.0734	-0.0853	-0.0734	0.0000	0.0000	0.0853
10	1	Strength Check:	0.0000	0.0853	0.0734	-0.0853	-0.0734	0.0000	0.0000	0.0853
10	1	Strength Check:	0.0000	0.0853	0.0734	-0.0853	-0.0734	0.0000	0.0000	-0.0853
10	1	Strength Check:	0.0000	0.1604	0.1455	-0.1604	-0.1455	0.0000	0.0000	0.1604
10	2	Set Precast In	0.0000	0.0000	0.0000	0.0000	0.0000	0.0000	0.0000	0.0000
10	2	Set Precast In	0.0000	0.0000	0.0000	0.0000	0.0000	0.0000	0.0000	0.0000
10	2	Tension PT:	0.0000	0.0000	0.0000	0.0000	0.0000	0.0000	0.0000	0.0000
10	2	Tension PT:	0.0000	0.0000	0.0000	0.0000	0.0000	0.0000	0.0000	0.0000
10	2	Tension PT:	0.0000	0.0000	0.0000	0.0000	0.0000	0.0000	0.0000	0.0000
10	2	Tension PT:	0.0000	0.0000	0.0000	0.0000	0.0000	0.0000	0.0000	0.0000
10	2	Tension PT:	0.0000	0.0000	0.0000	0.0000	0.0000	0.0000	0.0000	0.0000

RESULT : Member Stresses

Member	Station	Result Case	(P/A) @ Centroid (kips/in²)	Normal Stress @ Point 1 (kips/in²)	Normal Stress @ Point 2 (kips/in²)	Normal Stress @ Point 3 (kips/in²)	Normal Stress @ Point 4 (kips/in²)	Normal Stress @ Point 5	Normal Stress @ Point 6	Max ABS Total Stress (kips/in²)
10	2	Add	0.0000	0.0000	0.0000	0.0000	0.0000	0.0000	0.0000	0.0000
10	2	Add	0.0000	0.0000	0.0000	0.0000	0.0000	0.0000	0.0000	0.0000
10	2	Add	0.0000	0.0000	0.0000	0.0000	0.0000	0.0000	0.0000	0.0000
10	2	Add	0.0000	0.0000	0.0000	0.0000	0.0000	0.0000	0.0000	0.0000
10	2	Add	0.0000	0.0000	0.0000	0.0000	0.0000	0.0000	0.0000	0.0000
10	2	Backfill to Grade:	0.0000	0.0000	0.0000	0.0000	0.0000	0.0000	0.0000	0.0000
10	2	Backfill to Grade:	0.0000	0.0000	0.0000	0.0000	0.0000	0.0000	0.0000	0.0000
10	2	Backfill to Grade:	0.0000	0.0000	0.0000	0.0000	0.0000	0.0000	0.0000	0.0000
10	2	Backfill to Grade:	0.0000	0.0000	0.0000	0.0000	0.0000	0.0000	0.0000	0.0000
10	2	Backfill to Grade:	0.0000	0.0000	0.0000	0.0000	0.0000	0.0000	0.0000	0.0000
10	2	Backfill to Grade:	0.0000	0.0000	0.0000	0.0000	0.0000	0.0000	0.0000	0.0000
10	2	Pave: Pave:	0.0000	0.0000	0.0000	0.0000	0.0000	0.0000	0.0000	0.0000
10	2	Pave: Pave:	0.0000	0.0000	0.0000	0.0000	0.0000	0.0000	0.0000	0.0000
10	2	Pave: Pave: PT	0.0000	0.0000	0.0000	0.0000	0.0000	0.0000	0.0000	0.0000
10	2	Pave: Pave:	0.0000	0.0000	0.0000	0.0000	0.0000	0.0000	0.0000	0.0000
10	2	Pave: Pave: step	0.0000	0.0000	0.0000	0.0000	0.0000	0.0000	0.0000	0.0000
10	2	Open Bridge to	0.0000	0.0000	0.0000	0.0000	0.0000	0.0000	0.0000	0.0000
10	2	Open Bridge to	0.0000	0.0000	0.0000	0.0000	0.0000	0.0000	0.0000	0.0000
10	2	Open Bridge to	0.0000	0.0000	0.0000	0.0000	0.0000	0.0000	0.0000	0.0000
10	2	Open Bridge to	0.0000	0.0000	0.0000	0.0000	0.0000	0.0000	0.0000	0.0000
10	2	Open Bridge to	0.0000	0.0000	0.0000	0.0000	0.0000	0.0000	0.0000	0.0000
10	2	Open Bridge to	0.0000	0.0000	0.0000	0.0000	0.0000	0.0000	0.0000	0.0000
10	2	Partial Live Load	0.0000	0.0000	0.0000	0.0000	0.0000	0.0000	0.0000	0.0000
10	2	Partial Live Load	0.0000	0.0000	0.0000	0.0000	0.0000	0.0000	0.0000	0.0000
10	2	Partial Live Load	0.0000	0.0000	0.0000	0.0000	0.0000	0.0000	0.0000	0.0000
10	2	Partial Live Load	0.0000	0.0000	0.0000	0.0000	0.0000	0.0000	0.0000	0.0000
10	2	Partial Live Load	0.0000	0.0000	0.0000	0.0000	0.0000	0.0000	0.0000	0.0000
10	2	Remove Long	0.0000	0.0000	0.0000	0.0000	0.0000	0.0000	0.0000	0.0000
10	2	Remove Long	0.0000	0.0000	0.0000	0.0000	0.0000	0.0000	0.0000	0.0000
10	2	Remove Long	0.0000	0.0000	0.0000	0.0000	0.0000	0.0000	0.0000	0.0000
10	2	Remove Long	0.0000	0.0000	0.0000	0.0000	0.0000	0.0000	0.0000	0.0000
10	2	Remove Long	0.0000	0.0000	0.0000	0.0000	0.0000	0.0000	0.0000	0.0000
10	2	Long Term	0.0000	0.0000	0.0000	0.0000	0.0000	0.0000	0.0000	0.0000
10	2	Long Term	0.0000	0.0000	0.0000	0.0000	0.0000	0.0000	0.0000	0.0000

RESULT : Member Stresses

Member	Station	Result Case	(P/A) @ Centroid (kips/in²)	Normal Stress @ Point 1 (kips/in²)	Normal Stress @ Point 2 (kips/in²)	Normal Stress @ Point 3 (kips/in²)	Normal Stress @ Point 4 (kips/in²)	Normal Stress @ Point 5	Normal Stress @ Point 6	Max ABS Total Stress (kips/in²)
10	2	Long Term	0.0000	0.0000	0.0000	0.0000	0.0000	0.0000	0.0000	0.0000
10	2	Long Term	0.0000	0.0000	0.0000	0.0000	0.0000	0.0000	0.0000	0.0000
10	2	Long Term	0.0000	0.0000	0.0000	0.0000	0.0000	0.0000	0.0000	0.0000
10	2	Long Term	0.0000	0.0000	0.0000	0.0000	0.0000	0.0000	0.0000	0.0000
10	2	Long Term	0.0000	0.0000	0.0000	0.0000	0.0000	0.0000	0.0000	0.0000
10	2	Strength Check:	0.0000	0.0000	0.0000	0.0000	0.0000	0.0000	0.0000	0.0000
10	2	Strength Check:	0.0000	0.0000	0.0000	0.0000	0.0000	0.0000	0.0000	0.0000
10	2	Strength Check:	0.0000	0.0000	0.0000	0.0000	0.0000	0.0000	0.0000	0.0000
10	2	Strength Check:	0.0000	0.0000	0.0000	0.0000	0.0000	0.0000	0.0000	0.0000
10	2	Strength Check:	0.0000	0.0000	0.0000	0.0000	0.0000	0.0000	0.0000	0.0000
10	2	Strength Check:	0.0000	0.0000	0.0000	0.0000	0.0000	0.0000	0.0000	0.0000

2. Post-Processing Calculations

T·Y·LIN INTERNATIONAL

Project: PITTSFIELD | Job No. 411762 | Sheet: 1 of 3

Item: STRESS CHECKS | Designer: J. OLUND | Date: 2/28/14

Checker: | Date:

Grid: 1/10"

TENDON STRESS CHECKS:

→ REF: AASHTO 5.9.3

→ USING LOW RELAXATION STRANDS, 0.6" ϕ (0.217 in²)

✓ AASHTO 5.4.4.1

• MAX ALLOWABLE STRESS PRIOR TO ANCHOR SET = $0.9 f_{py} = 0.9(0.9 f_{pu}) = 218.7$ ksi

$(218.7 \text{ ksi}) \cdot (0.217 \text{ in}^2) = 47.4$ kip

→ USING/PROPOSING 42 kip ∴ ok

• MAX ALLOWABLE IMMEDIATELY AFTER ANCHOR SET = $0.70 f_{pu} = 189$ ksi

$(189 \text{ ksi})(0.217 \text{ in}^2) = 41.01$ kip

→ PER LARSA, MAX TENDON FORCE AT ANCHORS AFTER SEATING IS ≈ 38.4 KIPS w/ 1/4" ANCHOR SET ASSUMED ∴ ok

• MAX ALLOWABLE SERVICE STRESS AFTER ALL LOSSES = $0.8 f_{py} = 194.4$ ksi

$194 \text{ ksi} (0.217 \text{ in}^2) = 42.2$ kip

→ MAX TENDON FORCE UNDER SERVICE I CONDITIONS AT 100 YEAR POINT IS ≈ 36.8 KIPS ∴ ok

TENDON STRESSES OK AS PROPOSED

TENSION STRESS LIMIT CHECKS:

→ SERVICE III → TABLES 5.9.4.1.2-1 & 5.9.4.2.2-1

- @ JOINTS, MAX TENSION STRESS = 0 ksi (IN PRECOMPRESSED TENSILE ZONE)
- ELSWHERE = $0.19\sqrt{f'_c}$ = 0.425 ksi*, ASSUMING 5ksi CONCRETE STRENGTH AT TENSIONING TIME

* NEED MILD STEEL TO CONTROL/CARRY THESE STRESSES USING 30ksi MAX STEEL STRESS

→ MODEL LOCATIONS OF INTEREST = • MEMBER 2, STATION 0 } ENDS OF PRECAST ABUTMENTS
• MEMBER 9, STATION 2 } AT WING INTERFACE

• MEMBER 5, STATION 0 } INTERIOR BETWEEN ABUT SECTIONS
• MEMBER 6, STATION 2 }

CONSTRUCTION PHASING STRESSES:

- JOINTS
  → AFTER INITIAL STRESSING, JOINTS BETWEEN WINGS & ABUTS HAVE ~ 15-20 PSI IN TENSION, BUT THIS IS IN A COMPRESSION ZONE IN FINAL-BUILD CONDITION ∴ OK. ALL OTHER JOINT POINTS IN COMPRESSION.

  → AT DAY OF BRIDGE OPENING, ALL JOINTS ARE IN COMPRESSION. MINIMUM STRESS IS 6 PSI COMPRESSION AT WING #1 CONNECTION.
  → OK

  → AT 100 YEAR, END OF LIFE SITUATION, ALL JOINTS (EXCEPT WING 1) ARE IN COMPRESSION. WINGWALL #1 JOINT HAS 0.6 PSI IN TENSION ∴ SAY OK

CONSTRUCTION PHASING STRESSES (CONTINUED):

- ELSEWHERE (LOCATIONS OTHER THAN JOINTS)

→ AT END OF SERVICE, TENSION STRESS ON FRONT OF ABUTMENT AT PIER NEAR LINE #1 IS ≈ 0.36 KSI, ≤ 0.425 KSI ∴ OK

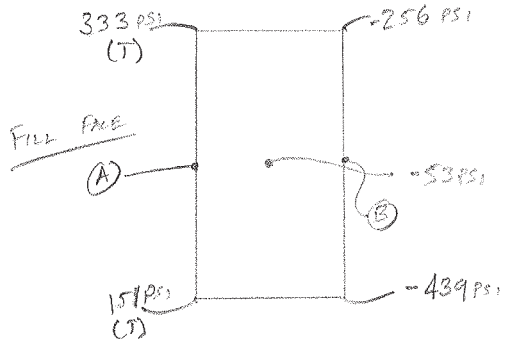

ABUTMENT SECTION WITH MAX TENSION (MEMBER 8, SPAN 2)

$$A = \frac{333 + 151}{2} = 242 \text{ PSI (T)}$$

$$B = \frac{-256 + -439}{2} = -348 \text{ (C)}$$

$$\left(\frac{242}{242 + 348}\right) \cdot 42'' = 17.2'' = \text{NEUTRAL AXIS FROM FILL FACE}$$

TENSION FORCE TO RESIST BY MILD REBAR = $\frac{(8.7' \text{ TALL})(17.2'' \text{ DEEP})(242 \text{ PSI})}{2} = 217.3$ KIPS

@ 30 KSI, NEED 7.24 IN^2 = $\boxed{\#6 \text{ @ } 6'' \text{ HORIZONTALLY, BACK FACE}}$

COMPRESSION STRESS LIMITS

STRESS LIMIT = $0.45 f'_c$ AFTER LOSSES (5.9.4.2.1-1)

= 2.25 KSI

→ MAX COMPRESSION THROUGHOUT CONSTRUCTION AND SERVICE IS 0.162 KSI < $0.45 f'_c$ ∴ COMPRESSION OK

T·Y·LIN INTERNATIONAL

Project: PITTSFIELD	Job No. 411762	Sheet: 1 of 2	
Item: PT VERIFICATION CALC'S	Designer: J. OLMO	Date: 1/7/14	
	Checker:	Date:	
WING WALL 1		Grid: 1/10"	

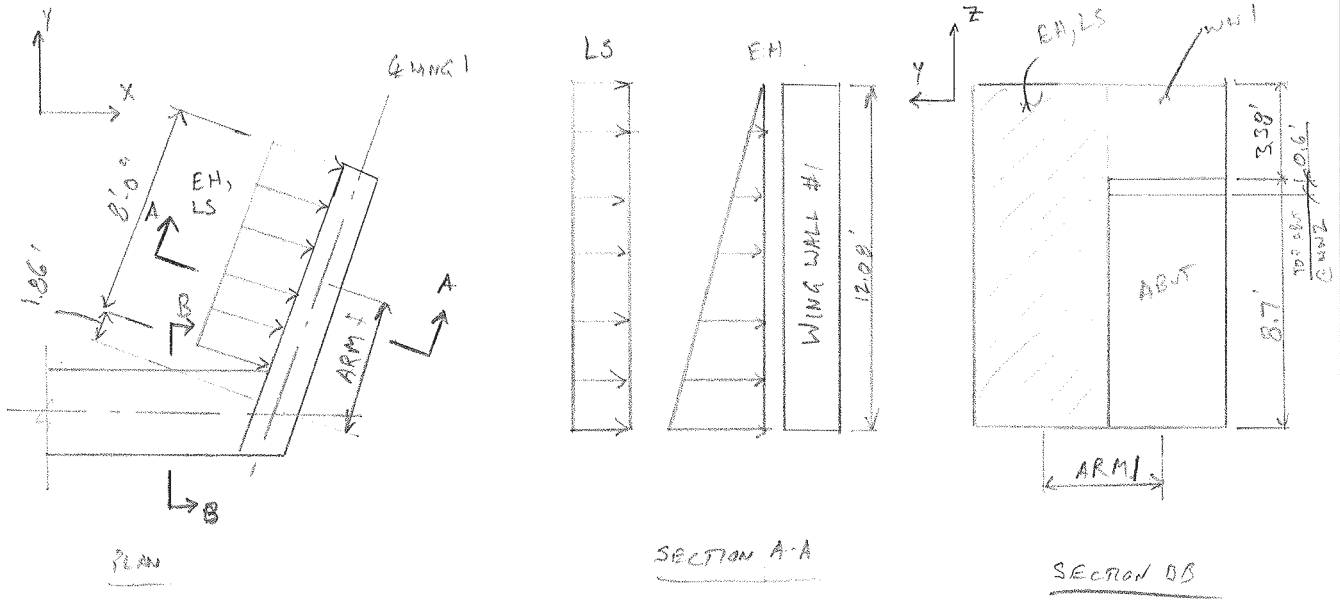

EH:

$K_0 = 0.44$

$EH = \frac{K_0 \gamma^s \cdot 12.08' \cdot 12.08'}{2} \cdot 8.0' = \underline{35.96 \text{ KIP}}$ (TENSION @ JOINT)

$ARM1 = 5.86'$

$M_{ZEH} = 35.96 \text{KIP} \cdot 5.86' = \underline{210.73 \text{ KIP·FT}} = 2528.8 \text{ KIP·IN}$

$M_{YEH} = 35.96 \text{KIP} \left[\frac{12.08'}{3} - \frac{8.7'}{2}\right] = \underline{-11.63 \text{ KIP·FT}} = -139.56 \text{ KIP·IN}$

LS:

$H_{EQ} = 2 \text{FT}$

$LS = 2\text{FT} \cdot 0.14 \text{KCF} \cdot 12.08' \cdot 8' \cdot 0.44 = \underline{11.91 \text{KIP}}$

$M_{ZLS} = LS \cdot ARM1 = \underline{69.8 \text{ KIP·FT}} = 837.6 \text{ KIP·IN}$

$M_{YLS} = LS \cdot (12.08/2 - 8.7/2) = \underline{20.13 \text{ KIP·FT}} = 241.6 \text{ KIP·IN}$

TENSION ON UPPER, FILL FACE CORNER (SERVICE III):

$$\sigma = \frac{P}{A} + \frac{M_z}{S_z} + \frac{M_y}{S_y}$$

$$S_y = \frac{(3.5')(8.7')^2}{6} = 44.15\,ft^3 = 76{,}295\,in^3$$

$$S_z = \frac{3.5^2 \cdot 8.7}{6} = 17.76\,ft^3 = 30{,}694\,in^3$$

$$A = (3.5')(8.7') = 30.45\,ft^2 = 4385\,in^2$$

$$\sigma = \frac{35.96^k}{4{,}385\,in^2} + \frac{[(1.0)(2{,}528.3\,k\text{-}ft\text{-}in) + (0.8)(337.6\,k\text{-}ft\text{-}in)]}{30{,}694\,in^3} + \frac{[(1.0)(-139.56\,k\text{-}ft\text{-}in) + (0.8)(241.6\,k\text{-}ft\text{-}in)]}{76{,}295\,in^3}$$

$$= 0.0082\,ksi + 0.1042\,ksi + 0.0007\,ksi$$

$$= 0.113\,ksi, \text{ TENSION}$$

EQUIVALENT PT NEEDS:

→ ASSUME BALANCED PT LAYOUT & 60% GUTS

$$A_{ps} = \frac{0.113\,ksi\,(4385\,in^2)}{0.6(270\,ksi)} = 3.05\,in^2 \equiv 14 \sim 0.6''\phi \text{ STRANDS (7 EA FACE)}$$

→ CHECK 6 STRANDS ON FILL FACE & 2 ON FRONT, BALANCED VERTICALLY:
PT FORCE = (0.6)(0.217 in²)(270) =

$$ecc = \frac{2.6'' + 6 \cdot 3.6''}{8} = 2.85'' \text{ FROM FRONT, } 7.5'' \text{ FROM CENTER}$$

$$\sigma_{PT} = \left[\frac{8.35\,kip}{4385\,in^2} + \frac{8.35\,kip \cdot 7.5''}{30{,}694\,in^3}\right] = 133\,PSI$$

∴ 6 & 2 PT LAYOUT SEEMS REASONABLE FOR SERVICE

→ CHECK STRENGTH

T·Y·LIN INTERNATIONAL

Project:	PITTSFIELD	Job No.	411762	Sheet:	1 of
Item:	CONSTRUCTION LOADS	Designer:	J. OLUND	Date:	2/27/14
	EH + LS ON WINGS	Checker:		Date:	
				Grid:	1/10"

→ ASSUME ABUTMENTS BACKFILLED TO ½ FT BELOW BRIDGE SEAT

→ ASSUME 200 TON CRANE (USE LINKBELT HC-248H) AND USE CLEAR DIST. BETWEEN WINGWALL & OUTRIGGER PAD

→ USE AT-REST PRESSURE ($K_o = 0.44$)

→ DETERMINE LATERAL SURCHARGE IN ACCORDANCE WITH AASHTO FIG 3.11.6.3.1 & 11.10.10.1-1

→ IGNORE PASSIVE PRESSURE ON EXTERIOR WALL FACE

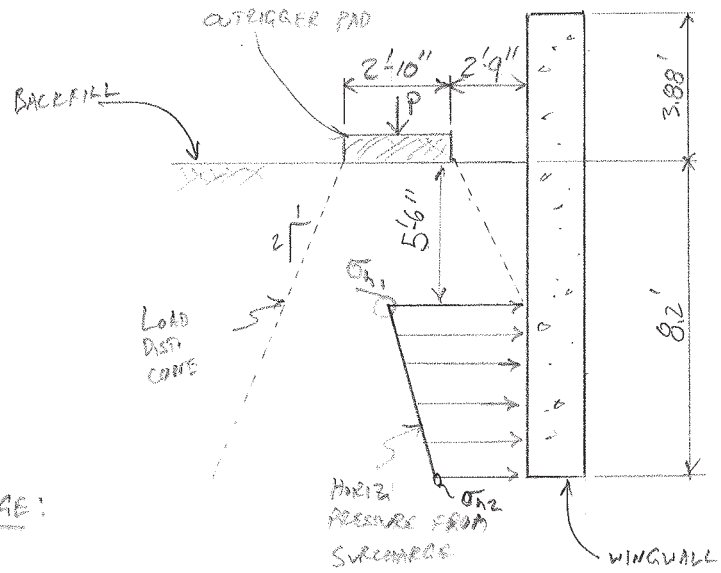

CONSTRUCTION SURCHARGE:

P = 201 KIP (SEE NEXT PAGE)

$$\sigma_{h_1} = K_o \sigma_{v_1} = K_o \cdot \left[\frac{P}{2.83' + 5.5'} \cdot \frac{1}{2.83' + 5.5'} \right] = \frac{K_o \cdot P}{69.4\,sf} = 1.27\,ksf$$

$$\sigma_{h_2} = K_o \sigma_{v_2} = K_o \cdot \left[\frac{P}{2.83' + 8.2'} \cdot \frac{1}{\frac{2.83' + 8.2'}{2} + 4.17'} \right] = \frac{K_o \cdot P}{106.8\,sf} = 0.83\,ksf$$

EQUIVALENT SURCHARGE ON TOTAL WALL HEIGHT = $\left[\frac{\sigma_{h_1} + \sigma_{h_2}}{2} \cdot 2.7 \right] \cdot \frac{1}{12.08'}$

$= \underline{0.234\,ksf}$

$= \underline{21.9\,kip\ TOTAL}$

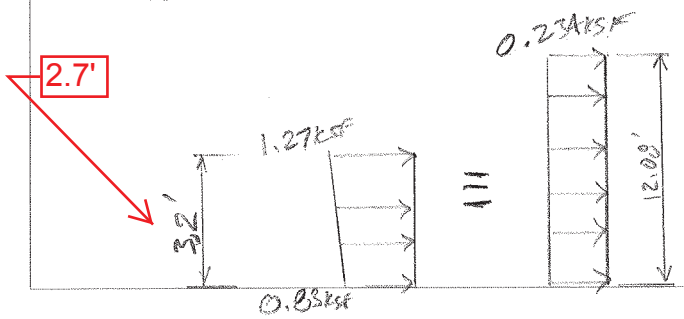

TY·LIN INTERNATIONAL

Project: Pittsfield	Job No. 41762	Sheet: 2 of
Item: Construction Loads	Designer: J. Olund	Date: 2/27/14
EH + LS on Wings	Checker:	Date:
		Grid: 1/10"

CRANE OUTRIGGER LOAD:

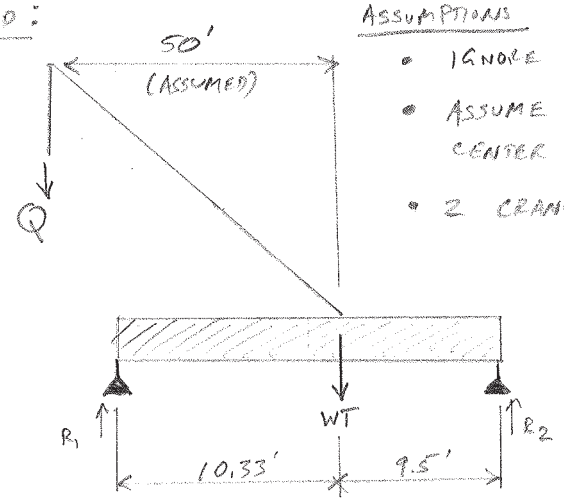

CRANE DIAGRAM

ASSUMPTIONS

- IGNORE FRONT BUMPER OUTRIGGERS
- ASSUME CRANE C.G. IS AT CENTER OF MAST ROTATION
- 2 CRANES FOR BEAM PICK

WT = 232.4 KIP

NEXT BEAM WT ≈ 1.75 KLF

$Q = 1.75\,KLF \cdot \frac{79'}{2} = 69.1\,KIP$

Total Weight =73.59 tons. NEXT D BEAM
Shop Drawings: Page NB1
Q= 73.59 kips

$$R_1 = \frac{(WT)\cdot 9.5'}{9.5' + 10.33'} + \frac{Q\cdot(50' + 9.5')}{10.33' + 9.5'}$$

$R_1 = 111.3\,KIP + 207\,KIP = 318\,KIP$

→ NOTE: REAR OUTRIGGERS IN TENSION
∴ UNSTABLE

→ SET $R_1 = 232.4\,KIP + 69.1\,KIP = 301.5\,KIP$

→ USE $\frac{1}{3}/\frac{2}{3}$ SPLIT FOR FRONT OUTRIGGERS

OUTRIGGER LOAD $= \frac{2}{3}(301.5\,KIP) = \underline{201\,KIP}$

ok... Tables are available for max pick angle for this crane to determine the actual outrigger load.

AT-REST PRESSURE (CONSTRUCTION):

$$EH = K_o \cdot \gamma_{soil} \cdot \frac{(8.2')^2}{2} \cdot (7.73' \text{ EXPOSED WALL LENGTH})$$

$$= 16.01 \text{ KIP TOTAL}$$

CONSTRUCTION FACTORED LOADS:

STR I = 1.35EH + 1.75 LS = 59.93 KIP

SER III = 1.0 EH + 0.8 LS = 33.5 KIP

IN-SERVICE FACTORED LOADS:

$$EH = K_o \cdot \gamma_{soil} \cdot \frac{(12.08')^2}{2} \cdot 7.73' = 34.75 \text{ KIP TOTAL}$$

$$LS = K_o \cdot 2' \cdot \gamma_{soil} \cdot 12.08' \cdot 7.73' = 11.50 \text{ KIP TOTAL}$$

STR I = 1.35EH + 1.75 LS = 67.04 KIP

SER III = 1.0 EH + 0.8 LS = 43.9 KIP

→ FINAL, IN-SERVICE CONDITIONS CONTROL OVER CONSTRUCTION LOADS ∴ NO NEED TO INVESTIGATE STRUCTURAL DESIGN WITH CONSTRUCTION LOADS.

→ KEEP OUTRIGGERS ≥ 2.75' CLEAR OF WALL

Link-Belt
CONSTRUCTION EQUIPMENT

Specifications

Hydraulic Lattice Boom Truck Crane

HC-248H

200-Ton *(181.50 metric ton)*

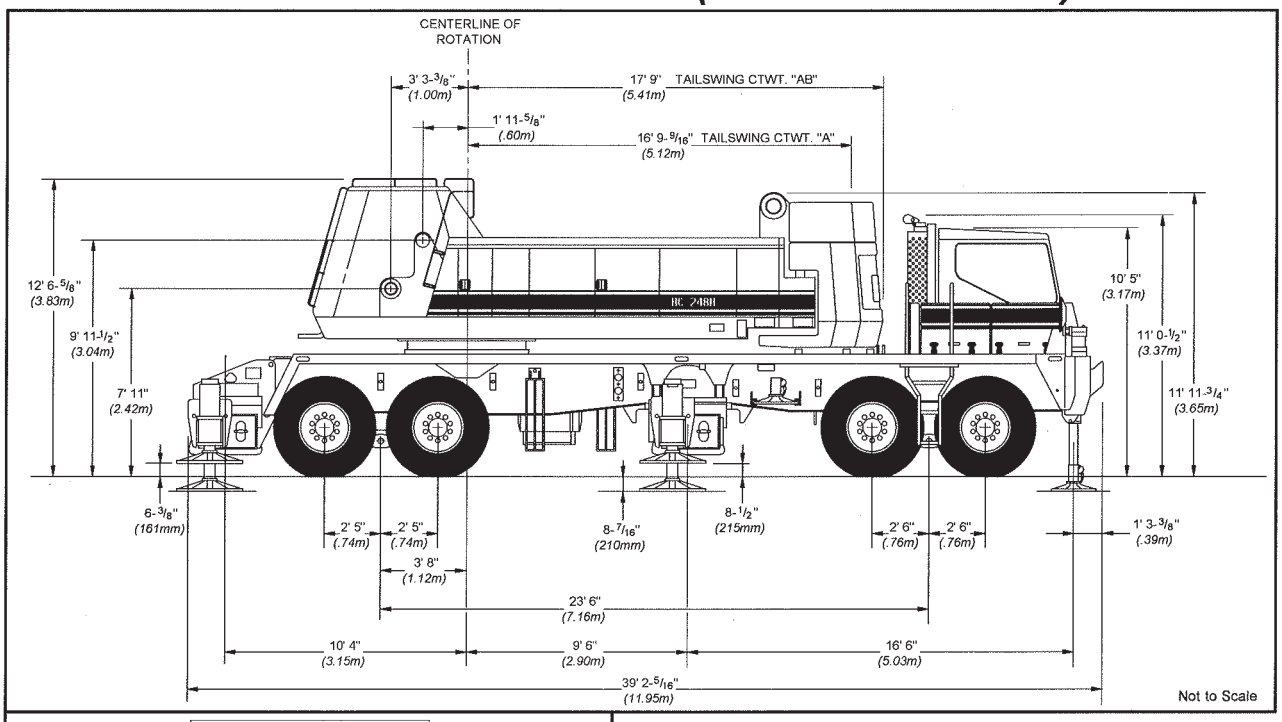

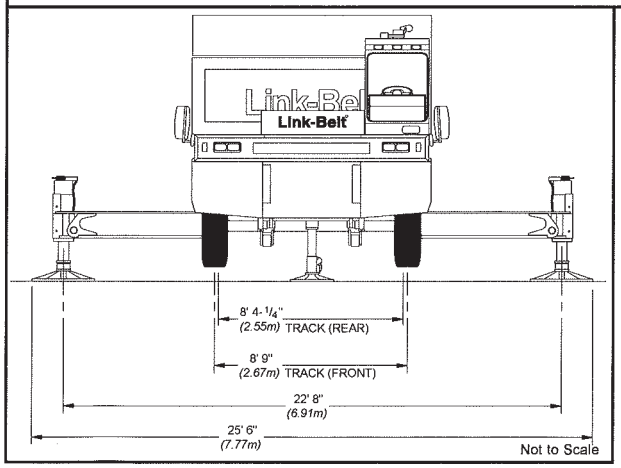

General dimensions	Feet	meters
Overall width, outriggers retracted (floats removed)	11' 0"	3.35
Minimum ground clearance (at bottom of front bogie beam)	11"	.28
Ground clearance under counterweight with machine on tires	5' 8.75"	1.75
Overall cab width (upper)	11' 0"	3.35
Radius of boom hinge pin	3' 3.4"	1.00
Vehicle turning diameter - Centerline outside front tire	106'	32.30
Vehicle turning diameter - Outside of outer front tire (curb clearance)	107' 3"	32.69
Vehicle clearance over front bumper	111' 8"	34.03
Vehicle clearance over "A" front bumper ctwt	113' 2"	34.49
Vehicle clearance over "AB" front bumper ctwt	113' 10"	34.70

Litho in U.S.A 11/98
#5272

This information is for reference use only. Operators manual should be consulted and adhered to.

Link-Belt
CONSTRUCTION EQUIPMENT

Axle	Maximum Allowable Load @ 65 mph (105 km/hr)
Front	43,660 lbs *(19804 kg)*
Rear	85,840 lbs *(38936 kg)*

Axle Loads

Base machine: Standard revolving upperstructure equipped with Isuzu engine, hydraulic backstops, mast, bridle, bail, boomhoist rope with mast to rear of upper and 1,050' (320 m) of front drum rope; Standard carrier equipped with Detroit Diesel Series 60 engine, manual transmission, aluminum fenders, 14R24 front and rear radial tires, full fuel and front center hydraulic jack.	Gross Vehicle Weight		Upper Facing Rear				Upper Facing Front			
			Front Axle		Rear Axle		Front Axle		Rear Axle	
	lbs	*kg*	lbs	*kg*	lbs	*kg*	lbs	*kg*	lbs	*kg*
	93,167	*42273*	43,933	*19928*	49,264	22346	17,606	*7986*	75,591	34288
Add Rear Outrigger Box	13,160	*5969*	-3,620	*-1642*	16,780	*7611*	-3,620	*-1642*	16,780	*7611*
Add Front Outrigger Box	11,960	5425	6,830	*3098*	5,130	*2327*	6,830	*3098*	5,130	*2327*
Add Main Outrigger Floats to Storage Racks	660	*299*	230	*104*	430	*195*	230	*104*	430	*195*
Add Bumper Outrigger Float to Storage Rack	80	*36*	60	*27*	20	*9*	60	*27*	20	*9*
~~Replace Std Front Tires with 14.00 x 24 Bias Tires~~	~~-130~~	*-59*	-130	*-59*	0	*0*	-130	*-59*	0	*0*
Add Pusher/Lift Axle (Consult factory for effects on axle groups)	2,250	*1021*								
Add "A" Bumper Counterweight	13,500	*6123*	17,718	*8037*	-4,218	*-1913*	17,718	*8037*	-4,218	*-1913*
Add "B" Bumper Counterweight	11,500	*5216*	15,625	*7087*	-4,125	*-1871*	15,625	*7087*	-4,125	*-1871*
Add "C" Bumper Counterweight	10,000	*4536*	13,348	*6054*	-3,348	*-1518*	13,348	*6054*	-3,348	*-1518*
Add Driver to Carrier Cab	220	*100*	245	*111*	-25	*-11*	245	*111*	-25	*-11*
~~Remove 1,050 ft of Wire Rope from Front Drum~~	~~-1,940~~	-880	-668	*-303*	-1,272	*-577*	63	*29*	-2,003	*-909*
~~Add 850 ft of Wire Rope to Rear Drum~~	~~-1,700~~	*771*	887	*402*	813	*369*	-357	*-162*	2,057	*933*
~~Remove Mast, Bridle, Bail & Boom Hoist Rope~~	~~-7,614~~	*-3454*	-6,342	*-2877*	-1,272	*-577*	3,966	*1799*	-11,580	*-5253*
~~Remove Boom Foot Pin Puller~~	~~-320~~	*-145*	-5	*-2*	-315	*-143*	-95	*-45*	-225	*-102*
Flip Mast to Front of the Upper	0	*0*	9,101	*4128*	9,101	*4128*	9,101	*4128*	-9,101	*-4128*
Replace hydraulic backstops w/ rigid (mast over front of upper)	0	0	9,101	*4128*	9,101	*4128*	9,101	*4128*	9,101	*4128*
Add "A" Upper Counterweight	23,000	*10433*	18,639	*8455*	4,361	*1978*	-11,462	*5199*	34,462	*15632*
Add "B" Upper Counterweight	19,330	*8768*	16,798	*7619*	2,532	*1149*	-10,766	*-4833*	30,096	*13651*
Add "C" Upper Counterweight	21,110	*9575*	17,422	*7903*	3,688	*1673*	-10,835	*-4915*	31,945	*14490*
Add 20 ft. Lattice Base Section	4,647	2108	-1,822	-826	6,469	2934				
Add 850 ft Type RB 1' rope to third drum	2,350	1066	-761	-345	3,111	1411				
Add 1050 ft Type RB 1' rope to third drum	2,280	*1034*	-598	*-271*	2,443	*1108*				
Add third drum deflector sheave assembly	600	*272*	-462	*-210*	1,062	*482*				
Add 10 ft Lattice Extension w/ Lifting Sheaves	2,574	*1168*	2,765	*1254*	5,339	*2422*				

TOTAL WEIGHT = 232.4 KIP

BIGGE This information is for reference use only. Operators manual should be consulted and adhered to. BIGGE

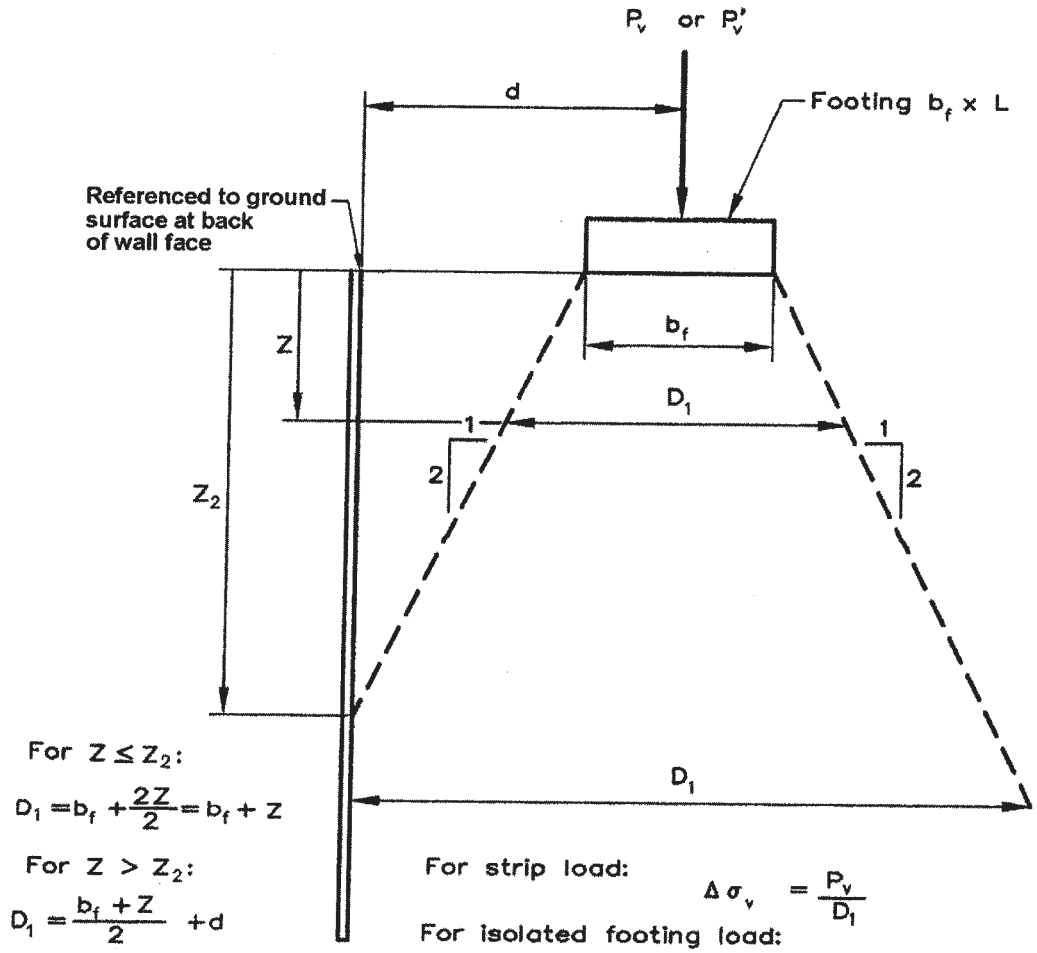

For $Z \le Z_2$:

$$D_1 = b_f + \frac{2Z}{2} = b_f + Z$$

For $Z > Z_2$:

$$D_1 = \frac{b_f + Z}{2} + d$$

For strip load:

$$\Delta\sigma_v = \frac{P_v}{D_1}$$

For isolated footing load:

$$\Delta\sigma_v = \frac{P_v'}{D_1(L+Z)}$$

For point load:

$$\Delta\sigma_v = \frac{P_v'}{D_1^2} \text{ with } b_f = 0$$

Where: D_1 = Effective width of applied load at any depth, calculated as shown above

b_f = Width of applied load. For footings which are eccentrically loaded (e.g., bridge abutment footings), set b_f equal to the equivalent footing width B' by reducing it by 2e', where e' is the eccentricity of the footing load (i.e., $b_f - 2e'$).

L = Length of footing

P_v = Load per linear foot of strip footing

P_v' = Load on isolated rectangular footing or point load

Z_2 = depth where effective width intersects back of wall face = $2d - b_f$

d = distance between the centroid of the concentrated vertical load and the back of the wall face.

Assume the increased vertical stress due to the surcharge load has no influence on stresses used to evaluate internal stability if the surcharge load is located behind the reinforced soil mass. For external stability, assume the surcharge has no influence if it is located outside the active zone behind the wall.

Figure 3.11.6.3-1—Distribution of Stress from Concentrated Vertical Load P_v for Internal and External Stability Calculations

© 2012 by the American Association of State Highway and Transportation Officials.
All rights reserved. Duplication is a violation of applicable law.

11.10.10—Special Loading Conditions

11.10.10.1—Concentrated Dead Loads

The distribution of stresses within and behind the wall resulting from concentrated loads applied to the wall top or behind the wall shall be determined in accordance with Article 3.11.6.3.

Figure 11.10.10.1-1 illustrates the combination of loads using superposition principles to evaluate external and internal wall stability. Depending on the size and location of the concentrated dead load, the location of the boundary between the active and resistant zones may have to be adjusted as shown in Figure 11.10.10.1-2.

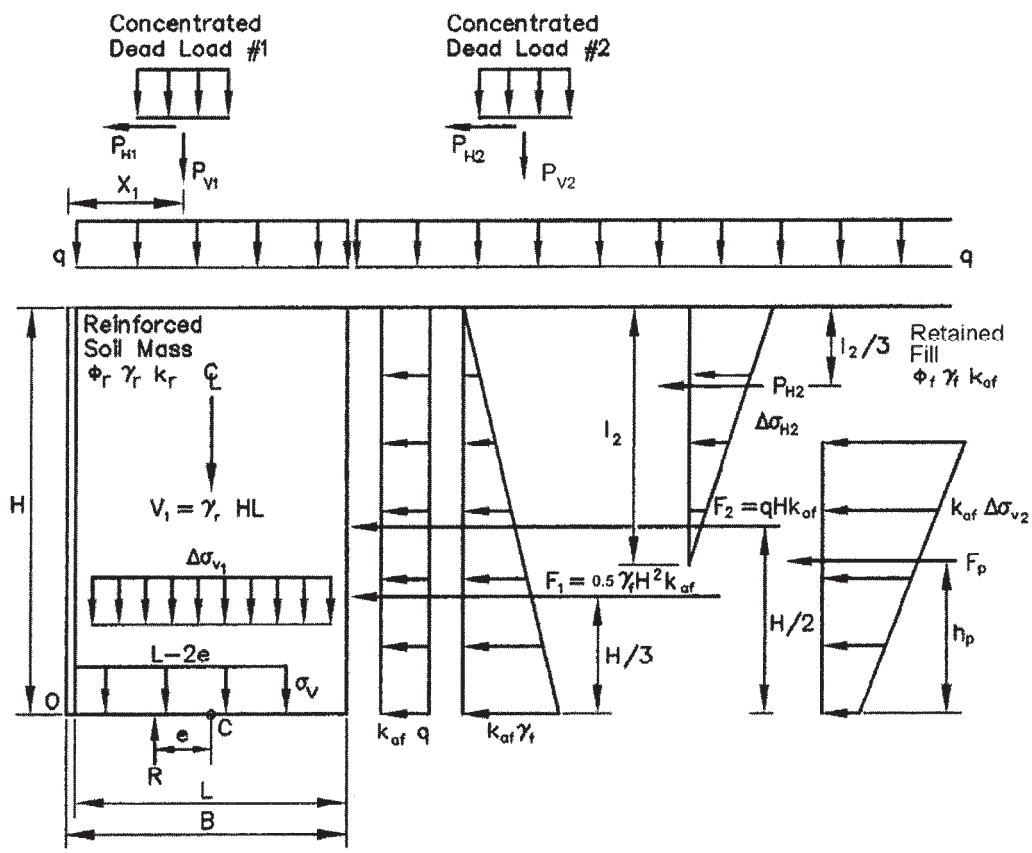

Notes:

These equations assume that concentrated dead load #2 is located within the active zone behind the reinforced soil mass.

For relatively thick facing elements, (e.g., segmental concrete facing blocks), it is acceptable to include the facing dimensions and weight in sliding, overturning, and bearing capacity calculations (i.e., use B in lieu of L).

P_{V1}, P_{H1}, $\Delta\sigma_{v1}$, $\Delta\sigma_{v2}$, $\Delta\sigma_{H2}$, and l_2 are as determined from Figures 3.11.6.3-1 and 3.11.6.3-2, and F_p results from P_{V2} (i.e., $K\Delta\sigma_{v2}$ from Figure 3.11.6.3-1. H is the total wall height at the face. h_p is the distance between the centroid of the trapezoidal distribution shown and the bottom of that distribution.

Figure 11.10.10.1-1—Superposition of Concentrated Dead Loads for External and Internal Stability Evaluation

T·Y·LIN INTERNATIONAL
engineers | planners | scientists

PROJECT: Pittsfield **JOB NO:** 411762.00
TASK: Integral Abutment Structural Design
DESIGN: Josh Olund **DATE:** 2/28/2014
CHECK: **DATE:**

Integral Abutment: Structural Design

All calculations are for Abutment No. 1 (Abutment No. 2 similar)

Inputs in yellow *Outputs Bordered*

Geometry

Thickness of Abutment Stem $t_{abut} := 3.5ft$

Thickness of Return Wingwalls $t_{wing} := 1.5ft$

Skew of Bridge $\theta := 20deg$

Abutment geometry from geometry MathCAD sheets and CAD.

$S_{pile} := 8.33333ft$

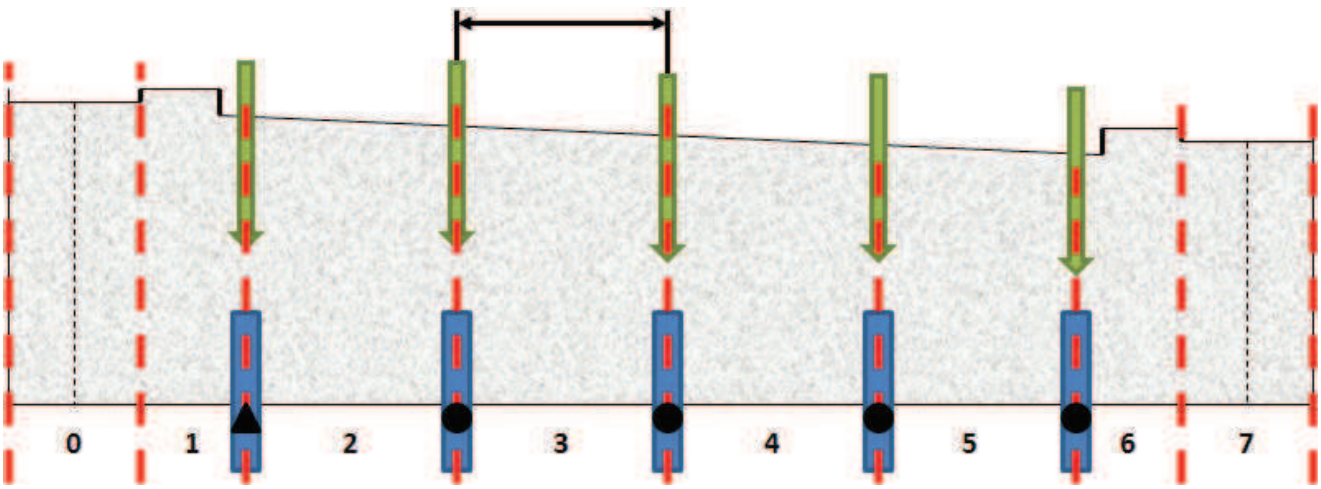

Lengths:

$L_{abut_0} := 3.957ft$ $L_{abut_1} := 0ft$ $L_{abut_2} := S_{pile}$ $L_{abut_3} := S_{pile}$ $L_{abut_4} := S_{pile}$ $L_{abut_5} := S_{pile}$ $L_{abut_6} := 0ft$ $L_{abut_7} := 6.710$

Heights:

$h_{abut_0} := 11.67ft$ $h_{abut_2} := 11.72ft$ $h_{abut_3} := 11.82ft$ $h_{abut_4} := 11.93ft$ $h_{abut_5} := 12.03ft$ $h_{abut_7} := 12.08ft$

$h_{abut_1} := 11.67ft$ $h_{abut_6} := 12.08ft$

$H_{dia} := 32in + 3in = 2.92\,ft$

Height of the Closure Pour, above precast abutments

Geometry, cont:

Length of Abutment $L_{abut.tot} := \sum L_{abut} = 44.00\,ft$

Length of Wings (from center of abutment) $L_{wing.1} := 7.229ft + \frac{1.75ft}{\cos(20deg)} = 9.09\,ft$

$L_{wing.2} := 7.729ft + \frac{1.75ft}{\cos(20deg)} = 9.59\,ft$

Maximum Height of Abutment $h_{abut.max} := \max(h_{abut}) = 12.08\,ft$

Number of Girders $n_{bm} := 8$

Approach Slab Seat Dimensions $AS_{seat.h} := 1.25ft$

$AS_{seat.w} := 1ft$

Height of Construction Jt. above Bottom of Abut $h_{const.jt} := 8.4ft$

Length Of Bridge $L_{bridge} := 78ft$

Material Properties:

Unit Weight of Concrete $\gamma_c := 150pcf$

Unit Weight of Backfill $\gamma_s := 140pcf$ *Project Plans*

Backfill Friction Angle $\phi_f := 34deg$ *VTrans SDM*

Rankine K_p equation: $K_p := \frac{1 + \sin(\phi_f)}{1 - \sin(\phi_f)} = 3.54$ *Use Rankine with 1.0 Load Factor*

At-Rest Pressure Coefficient $K_o := 1 - \sin(\phi_f) = 0.44$ *[AASHTO 3.11.5.2-1]*

Abutment Loads

Vertical loads from superstucture calculated separately

LS: Live Load Surcharge:

LL Surcharge Table [AASHTO T 3.11.6.4-1]

$$LS_{Table} := \begin{array}{c} \begin{array}{cc} \text{About Ht (ft)} & h_{eq}\text{ (ft)} \end{array} \\ \begin{pmatrix} 0 & 4 \\ 5 & 4 \\ 10 & 3 \\ 20 & 2 \\ 50 & 2 \end{pmatrix} \end{array}$$

Equivalent Heights of Soil at each Location

$$h_{eq} := \overrightarrow{\text{linterp}\left(LS_{Table}^{\langle 0 \rangle}, LS_{Table}^{\langle 1 \rangle}, \frac{h_{abut}}{ft}\right)} \cdot ft = \begin{pmatrix} 2.83 \\ 2.83 \\ 2.83 \\ 2.82 \\ 2.81 \\ 2.80 \\ 2.79 \\ 2.79 \end{pmatrix} ft$$

Constant Horizontal Earth Pressure due to Live Load Surcharge

$$\Delta_p := K_p \cdot \gamma_s \cdot h_{eq} = \begin{pmatrix} 1.40 \\ 1.40 \\ 1.40 \\ 1.40 \\ 1.39 \\ 1.39 \\ 1.38 \\ 1.38 \end{pmatrix} \cdot ksf$$

Distributed Linear Load of Live Load Surcharge at Each Location

$$\boxed{W_{LS} := \overrightarrow{\left[\Delta_p \cdot \left(h_{abut} - H_{dia}\right)\right]} = \begin{pmatrix} 1.02 \\ 1.02 \\ 1.03 \\ 1.04 \\ 1.04 \\ 1.05 \\ 1.06 \\ 1.06 \end{pmatrix} \cdot \frac{kip}{in}}$$

Loads, cont.:

LS on Wings

Uniform Loads (2 ft h_{eq}) [AASHTO T3.11.6.4-2]

$$W_{LS.wing.1} := K_o \cdot \gamma_s \cdot 2ft \cdot h_{abut_0} = 0.120 \cdot \frac{kip}{in}$$

$$W_{LS.wing.2} := K_o \cdot \gamma_s \cdot 2ft \cdot h_{abut_7} = 0.124 \cdot \frac{kip}{in}$$

Application Length Ratio

$$L_{ratio1} := \left(L_{wing.1} - 1.75 \frac{ft}{\cos(20deg)}\right) \div L_{wing.1} = 0.80$$

$$L_{ratio2} := \left(L_{wing.2} - 1.75 \frac{ft}{\cos(20deg)}\right) \div L_{wing.2} = 0.81$$

EH: Passive Pressure:

Distributed Linear Load of Passive Lateral Earth Pressure

$$W_{EH} := \overrightarrow{\left[K_p \cdot \gamma_s \cdot \left(\frac{h_{abut} + H_{dia}}{2}\right) \cdot \left(h_{abut} - H_{dia}\right)\right]} = \begin{pmatrix} 2.63 \\ 2.63 \\ 2.66 \\ 2.71 \\ 2.76 \\ 2.81 \\ 2.84 \\ 2.84 \end{pmatrix} \cdot \frac{kip}{in}$$

$$a := K_p \cdot \gamma_s \cdot H_{dia}$$

$$b := K_p \cdot \gamma_s \cdot h_{abut}$$

$$R := \overrightarrow{\left[\left(\frac{h_{abut} - H_{dia}}{3}\right) \cdot \frac{(2 \cdot a + b)}{a + b}\right]} = \begin{pmatrix} 3.50 \\ 3.50 \\ 3.52 \\ 3.56 \\ 3.59 \\ 3.63 \\ 3.65 \\ 3.65 \end{pmatrix} ft$$

Distributed moment along abutment sections - moment arm is the difference between the vertical centers of the precast and the center of the resultant

$$M_{EH} := \overrightarrow{\left[W_{EH} \cdot \left[R - \frac{\left(h_{abut} - H_{dia}\right)}{2}\right]\right]} = \begin{pmatrix} -27.68 \\ -27.68 \\ -28.15 \\ -29.12 \\ -30.22 \\ -31.23 \\ -31.75 \\ -31.75 \end{pmatrix} \cdot \frac{kip \cdot in}{in}$$

EH: At Rest Pressure (on Wing):

Distributed Linear Load of At Rest Lat. Earth Pressure

$$W_{EH.wing.1} := K_o \cdot \gamma_s \cdot h_{abut_0} \cdot \frac{h_{abut_0}}{2} = 0.350 \cdot \frac{kip}{in}$$

$$W_{EH.wing.2} := K_o \cdot \gamma_s \cdot h_{abut_7} \cdot \frac{h_{abut_7}}{2} = 0.375 \cdot \frac{kip}{in}$$

Distributed Moment along member, due to offset between lateral load application point and pressure resultant location

$$M_{EF.wing.1} := W_{EH.wing.1} \cdot \left(\frac{1}{2} - \frac{1}{3}\right) \cdot h_{abut_0} = 8.17 \cdot \frac{kip \cdot in}{in}$$

$$M_{EF.wing.2} := W_{EH.wing.2} \cdot \left(\frac{1}{2} - \frac{1}{3}\right) \cdot h_{abut_7} = 9.07 \cdot \frac{kip \cdot in}{in}$$

CT: Collision Force transmitted through soil from guardrail posts to wings

There is no specific guidance in the AASHTO code regarding loads from traffic impact on guardrails located adjacent to abutments or wingwalls. Section 11.10.10.2 discusses traffic loads from barriers transmitted to MSE walls and uses a distributed force equal to 2 kips/ft (0.167 kip/in) . This load, applied with the EEII loading case (thus a resistance factor of 1.0 and an LS load factor of 0.5) is not significantly greater than the loads used for the Strength I case and will be ignored.

Outputs from LARSA Model

At Precast Joint	At Fixity Location	Internal (reversible)
$M_{z.u.jt} := 219kip \cdot ft$	$M_{z.u.fixity} := 959kip \cdot ft$	$M_{z.u.int} := 292kip \cdot ft$
$M_{y.u.jt} := 178kip \cdot ft$	$M_{y.u.fixity} := 791 \cdot kip \cdot ft$	$M_{y.u.int} := 140kip \cdot ft$

By observation, internal moments will not control

Material Properties:

Concrete Strength of Abutment $f'_c := 5ksi$

Concrete compressive stress block coefficeint (AASHTO 5.7.2.2) $\beta_1 := \max\left[\left[0.85 - 0.05 \cdot \frac{(f'_c - 4ksi)}{1ksi}\right], 0.65\right] = 0.80$

Rupture Modulus (5.4.2.6) $f_r := 0.24 \cdot \sqrt{f'_c \cdot ksi} = 0.54 \cdot ksi$

Modulus of Elasticity of Concrete $E_c := 1820\sqrt{f'_c \cdot ksi} = 4070 \cdot ksi$

Yield Strength of Plain Steel Reinforcement $F_y := 60ksi$

Modulus of Elasticity of Tendons $E_{ps} := 28500ksi$

Ultimate Strength of Tendons $f_{pu} := 270ksi$

Yield Strength of Tendons $f_{py} := 0.9 \cdot f_{pu} = 243.00 \cdot ksi$

Area of Tendons $A_{ps} := 8 \cdot 0.217in^2 = 1.74 \cdot in^2$

Pretensioning steel coefficient (AASHTO C5.7.3.1.1-1) $k := 0.28$

Depth to center of post tensioning steel from extreme compression fiber (Moment about Y axis)

$$d_{p.y} := \frac{9in + 25in + 41in + 57in + 73in + 89in + 25in + 73in}{8} = 49.00 \cdot in$$

Depth to center of post tensioning steel from extreme compression fiber (Moment about Z axis)

$$d_{p.z} := \frac{2 \cdot 6in + 6 \cdot 36in}{8} = 28.50 \cdot in$$

Depth to extreme fiber of post tensioning steel from extreme compression fiber (For moment about Y axis) (Assuming Tendon within center of Duct, OK for a straight duct)

$$d_{t.y} := 8.7ft - 6in = 98.40 \cdot in$$

Depth to extreme fiber of post tensioning steel from extreme compression fiber (For moment about Z axis) (Assuming Tendon within center of Duct, OK for a straight duct)

$$d_{t.z} := t_{abut} - 6in = 36.00 \cdot in$$

Check Ultimate Moment

Design Height of Abutment $h_{design} := 8.7ft = 104.40 \cdot in$

Thickness of Abutment $t_{abut} = 42.00 \cdot in$

Gross Section Area $A_g := h_{design} \cdot t_{abut} = 4384.80 \cdot in^2$

Gross Section Moment of Inertia (about Y axis) $I_{g.y} := \frac{h_{design}^3 \cdot t_{abut}}{12} = 3982626.14 \cdot in^4$

Gross Section Moment of Inertia (about Z axis) $I_{g.z} := \frac{h_{design} \cdot t_{abut}^3}{12} = 644565.60 \cdot in^4$

Section Modulus (about Y axis) $S_{g.y} := \frac{I_{g.y}}{h_{design} \div 2} = 76295.52 \cdot in^3$

Section Modulus (about Z axis) $S_{g.z} := \frac{I_{g.z}}{t_{abut} \div 2} = 30693.60 \cdot in^3$

Plain Steel Reinforcement:

Area Steel (resisting Z axis moment) (#6's at 9" in plan set) $A_{s.z} := Ceil\left(\frac{8.7ft - 2 \cdot 2in}{9in}, 1\right) 0.44in^2 = 5.28 \cdot in^2$

Area Steel Top and Bottom (resisting Y axis moment) (use single #6 from z-axis compression face) $A_{s.y} := 0.44in^2 = 0.44 \cdot in^2$

Design Moments

Effective Stress in Post-Tensioning Steel at Section under Consideration, After all Losses (From LARSA)

$$f_{pe} := \frac{33.9kip \cdot 8}{A_{ps}} = 156.22 \cdot ksi$$

Distance from Compression Fiber to neutral axis assuming Rectangular-section behavior (AASHTO 5.7.3.1.2-4) (About Y axis)

$$c_y := \frac{A_{ps} \cdot f_{pu} + A_{s.y} \cdot F_y}{0.85 f'_c \cdot \beta_1 \cdot t_{abut}} = 3.47 \cdot in$$

Distance from Compression Fiber to neutral axis assuming Rectangular-section behavior (AASHTO 5.7.3.1.2-4) (About Z axis)

$$c_z := \frac{A_{ps} \cdot f_{pu} + A_{s.z} \cdot F_y}{0.85 f'_c \cdot \beta_1 \cdot h_{design}} = 2.21 \cdot in$$

Number of Support Hinges Crossed by the Tendon between Anchorages or Discretely Bonded Points

$$N_s := 0$$

Effective Tendon Length (AASHTO 5.7.3.1.2-2)

$$l_e := \frac{2 \cdot L_{abut.tot}}{2 + N_s} = 44.00 ft$$

Stress in PT at centroid at ultimate moment (AASHTO 5.7.3.1.2-1) (Y axis)

$$f_{ps.y} := \min\left[f_{pe} + 900 \cdot \left(\frac{d_{p.y} - c_y}{l_e}\right) \cdot ksi, f_{py}\right] = 233.83 \cdot ksi$$

Stress in PT at centroid at ultimate moment (AASHTO 5.7.3.1.2-1) (Z axis)

$$f_{ps.z} := \min\left[f_{pe} + 900 \cdot \left(\frac{d_{p.z} - c_z}{l_e}\right) \cdot ksi, f_{py}\right] = 201.03 \cdot ksi$$

Moment Resistance at Fixity Location:

Nominal Moment Resistance
(AASHTO 5.7.3.2.2-1) (Moment about Y axis)

$$M_{n.y.fixity} := A_{ps} \cdot f_{ps.y} \cdot \left(d_{p.y} - \frac{\beta_1 \cdot c_y}{2} \right) + A_{s.y} \cdot F_y \cdot \left[\left(h_{design} - 3.125in \right) - \frac{\beta_1 \cdot c_y}{2} \right] = 1830.40 \cdot kip \cdot ft$$

Nominal Moment Resistance
(AASHTO 5.7.3.2.2-1) (Moment about Z axis)

$$M_{n.z.fixity} := A_{ps} \cdot f_{ps.z} \cdot \left(d_{p.z} - \frac{\beta_1 \cdot c_z}{2} \right) + A_{s.z} \cdot F_y \cdot \left[\left(t_{abut} - 3.125in \right) - \frac{\beta_1 \cdot c_z}{2} \right] = 1806.03 \cdot kip \cdot ft$$

Resistance Factor, not at joints:

Resistance Factor for Prestressed Concrete
(AASHTO 5.5.4.2.1) (About Y axis)

$$\phi_{f.y.fixity} := \min\left[\max\left[\left[0.583 + 0.25 \cdot \left(\frac{d_{t.y}}{c_y} - 1 \right) \right], 0.75 \right], 1 \right] = 1.0$$

Resistance Factor for Prestressed Concrete
(AASHTO 5.5.4.2.1) (About Z axis)

$$\phi_{f.z.fixity} := \min\left[\max\left[\left[0.583 + 0.25 \cdot \left(\frac{d_{t.z}}{c_z} - 1 \right) \right], 0.75 \right], 1 \right] = 1.0$$

Factored Bending Resistance (About Y axis)

$$\boxed{M_{r.y.fixity} := \phi_{f.y.fixity} \cdot M_{n.y.fixity} = 1830.40 \cdot kip \cdot ft}$$

Factored Bending Resistance (About Z axis)

$$\boxed{M_{r.z.fixity} := \phi_{f.z.fixity} \cdot M_{n.z.fixity} = 1806.03 \cdot kip \cdot ft}$$

Moment Resistance at Joint Location:

Nominal Moment Resistance
(AASHTO 5.7.3.2.2-1) (Moment about Y axis)

$$M_{n.y.joint} := A_{ps} \cdot f_{ps.y} \cdot \left(d_{p.y} - \frac{\beta_1 \cdot c_y}{2} \right) = 1610.65 \cdot kip \cdot ft$$

Nominal Moment Resistance
(AASHTO 5.7.3.2.2-1) (Moment about Z axis)

$$M_{n.z.joint} := A_{ps} \cdot f_{ps.z} \cdot \left(d_{p.z} - \frac{\beta_1 \cdot c_z}{2} \right) = 803.10 \cdot kip \cdot ft$$

Resistance Factor, at joints:

Resistance Factor for Prestressed Concrete
(AASHTO 5.5.4.2.2) (About Y axis)

$$\phi_{f.y.joint} := 0.9 = 0.90$$

Resistance Factor for Prestressed Concrete
(AASHTO 5.5.4.2.2) (About Z axis)

$$\phi_{f.z.joint} := 0.9 = 0.90$$

Factored Bending Resistance (About Y axis)

$$\boxed{M_{r.y.joint} := \phi_{f.y.joint} \cdot M_{n.y.joint} = 1449.59 \cdot kip \cdot ft}$$

Factored Bending Resistance (About Z axis)

$$\boxed{M_{r.z.joint} := \phi_{f.z.joint} \cdot M_{n.z.joint} = 722.79 \cdot kip \cdot ft}$$

Ultimate Moment Check

Load Factor for Prestressing $\gamma_p := 1.00$

Axial Load (From Prestressing) (From LARSA) $P_u := \gamma_p \cdot 8 \cdot 33.8kip = 270.40 \cdot kip$

Axial Resistance Factor $\phi_a := 0.75$

Nominal Axial Resistance $P_n := f'_c \cdot A_g = 21924.00 \cdot kip$

Is Factored Axial Load Below Biaxial Threshold? [5.7.4.5]

$$Check_{Biaxial.fixity} := if\left(P_u \le 0.1 \cdot \phi_a \cdot P_n, \text{"Include Moment Only"}, \text{"Use Axial Expression"}\right) = \text{"Include Moment Only"}$$

Demand to Capacity Ratio (About Y Axis) $\dfrac{M_{y.u.fixity}}{M_{r.y.fixity}} = 0.43$

Demand to Capacity Ratio (About Z Axis) $\dfrac{M_{z.u.fixity}}{M_{r.z.fixity}} = 0.53$

Biaxial Bending Demand to Capacity Ratio, Moment Only (AASHTO 5.7.4.5-3) $Biaxial_{DC.Ratio.fixity} := \dfrac{M_{y.u.fixity}}{M_{r.y.fixity}} + \dfrac{M_{z.u.fixity}}{M_{r.z.fixity}} = 0.96$

$$Check_{M.u.fixity} := if\left(Biaxial_{DC.Ratio.fixity} \le 1.0, \text{"Abutment Ultimate Moment OK"}, \text{"Abutment Ultimate Moment No Good"}\right)$$

$$\boxed{Check_{M.u.fixity} = \text{"Abutment Ultimate Moment OK"}}$$

Demand to Capacity Ratio (About Y Axis) $\dfrac{M_{y.u.jt}}{M_{r.y.joint}} = 0.12$

Demand to Capacity Ratio (About Z Axis) $\dfrac{M_{z.u.jt}}{M_{r.z.joint}} = 0.30$

Biaxial Bending Demand to Capacity Ratio, Moment Only (AASHTO 5.7.4.5-3) $Biaxial_{DC.Ratio.joint} := \dfrac{M_{y.u.jt}}{M_{r.y.joint}} + \dfrac{M_{z.u.jt}}{M_{r.z.joint}} = 0.43$

$$Check_{M.u.joint} := if\left(Biaxial_{DC.Ratio.joint} \le 1.0, \text{"Abutment Ultimate Moment OK"}, \text{"Abutment Ultimate Moment No Good"}\right)$$

$$\boxed{Check_{M.u.joint} = \text{"Abutment Ultimate Moment OK"}}$$

Minimum Reinforcement Check (5.7.3.3.2)

Average Stress in Extreme Tension Fiber due to Post Tensioning, After all Losses (Moment about Y Axis) (From LARSA)

$$f_{cpe.y} := \frac{(.121 - .006) + (-.016 + .001)}{2} ksi = 0.05 \cdot ksi$$

Average Stress in Extreme Tension Fiber due to Post Tensioning, After all Losses (Moment about Z Axis) (From LARSA)

$$f_{cpe.z} := \frac{(.121 - .006) + (.144 - .007)}{2} ksi = 0.13 \cdot ksi$$

Flexural Cracking Variabliity Factor $\gamma_1 := 1.6$

Prestress Variability Factor $\gamma_2 := 1.0$

Ratio of Min Yield to Ult. Tensile Strength $\gamma_3 := 1.0$

Cracking Moment (About Y Axis) $M_{cr.y} := \gamma_3 \cdot (\gamma_1 \cdot f_r + \gamma_2 \cdot f_{cpe.y}) \cdot S_{g.y} = 5777.16 \cdot kip \cdot ft$

Cracking Moment (About Z Axis) $M_{cr.z} := \gamma_3 \cdot (\gamma_1 \cdot f_r + \gamma_2 \cdot f_{cpe.z}) \cdot S_{g.z} = 2518.54 \cdot kip \cdot ft$

Factored Ultimate Moment (About Y Axis) $M_{y.u.fixity} = 791.00 \cdot kip \cdot ft$

Factored Ultimate Moment (About Z Axis) $M_{z.u.fixity} = 959.00 \cdot kip \cdot ft$

Required Minimum Flexural Resistance (About Y Axis) $\boxed{M_{r.y.min} := \min(M_{cr.y}, 1.33 \cdot M_{y.u.fixity}) = 1052.03 \cdot kip \cdot ft}$

Required Minimum Flexural Resistance (About Z Axis) $\boxed{M_{r.z.min} := \min(M_{cr.z}, 1.33 \cdot M_{z.u.fixity}) = 1275.47 \cdot kip \cdot ft}$

Demand to Capacity Ratio (About Y Axis) $\frac{M_{r.y.min}}{M_{r.y.fixity}} = 0.57$

Demand to Capacity Ratio (About Z Axis) $\frac{M_{r.z.min}}{M_{r.z.fixity}} = 0.71$

$$Check_{Min.Reinf} := \text{if}\left(\frac{M_{r.z.min}}{M_{r.z.fixity}} \le 1.0 \wedge \frac{M_{r.y.min}}{M_{r.y.fixity}} \le 1.0, \text{"Abutment Min. Reinf. OK"}, \text{"Abutment Min. Reinf. No Good"}\right)$$

$$\boxed{Check_{Min.Reinf} = \text{"Abutment Min. Reinf. OK"}}$$

TY·LIN INTERNATIONAL

Project: PITTSFIELD	Job No. 411762.00	Sheet: 1	of 5
Item: BURSTING STEEL	Designer: J. Quinn	Date: 1/16/14	
	Checker:	Date:	
		Grid: 1/10"	

STRUT & TIE MODEL METHOD:

REF: AASHTO 5.10.9.4

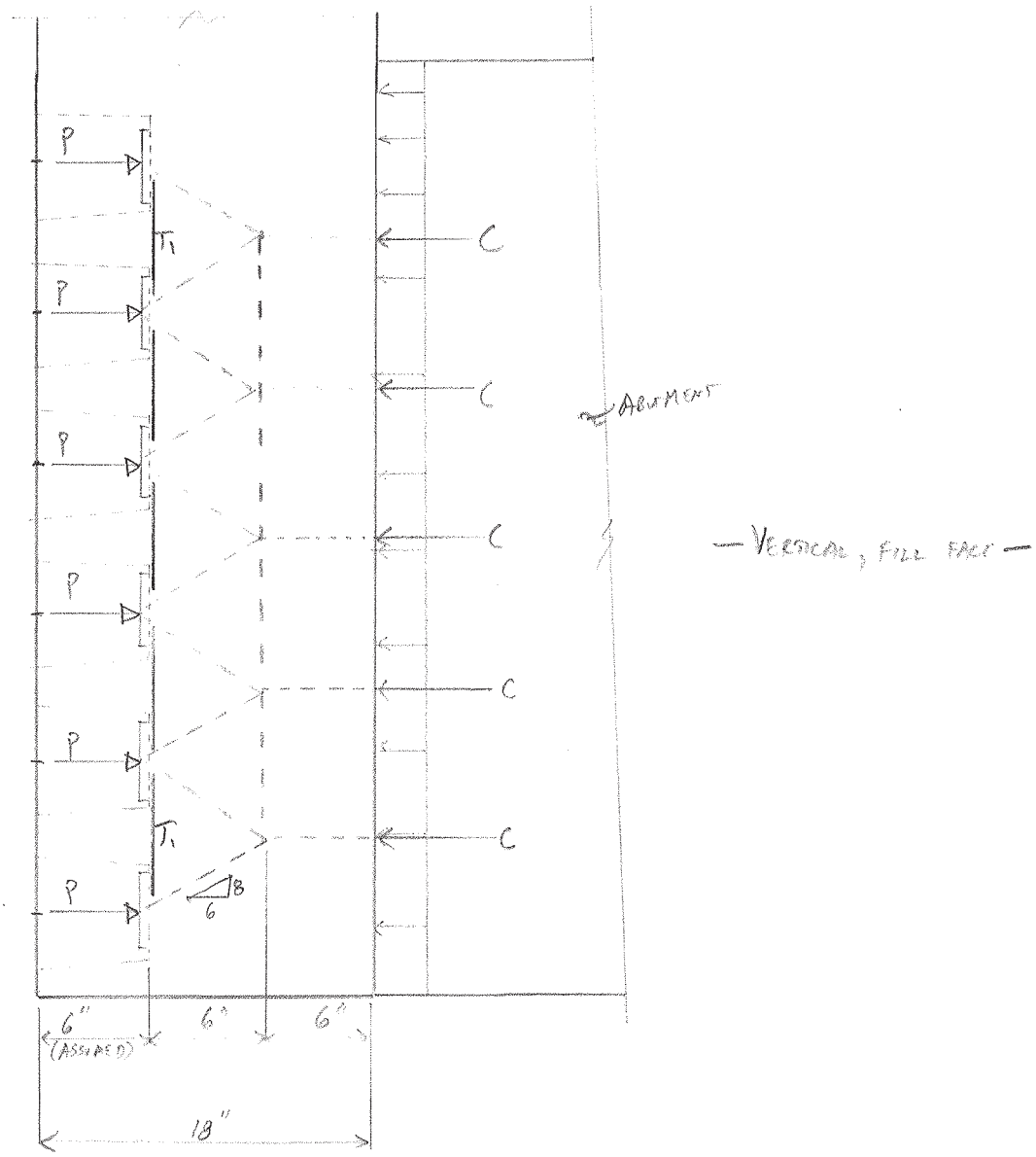

APPLIED PRESSURE IS NEARLY UNIFORM AND CONDENSING FORCES FROM 6 APPLICATION POINTS TO 5 RECEIVING POINTS IS CONSERVATIVE FOR STRUT & TIE MODELING.

$$T_1 = \frac{8}{6} \cdot P = \frac{8}{6} \cdot 42\,\text{kip} = 56\,\text{kip}$$

$$A_s\,\text{REQ'D} = \frac{56}{(0.9)(60\,\text{ksi})} = 1.04\,\text{in}^2 \equiv 3 \sim \#6^{\text{'s}},\ 4 \sim \#5^{\text{'s}},\ 6 \sim \#4^{\text{'s}}$$

ϕ

T·Y·LIN INTERNATIONAL

Project: PITTSFIELD	Job No. 41762.00	Sheet: 2	of 5
Item: BURSTING STEEL	Designer: J. OLUND	Date: 1/16/14	
	Checker:	Date:	
		Grid: 1/10"	

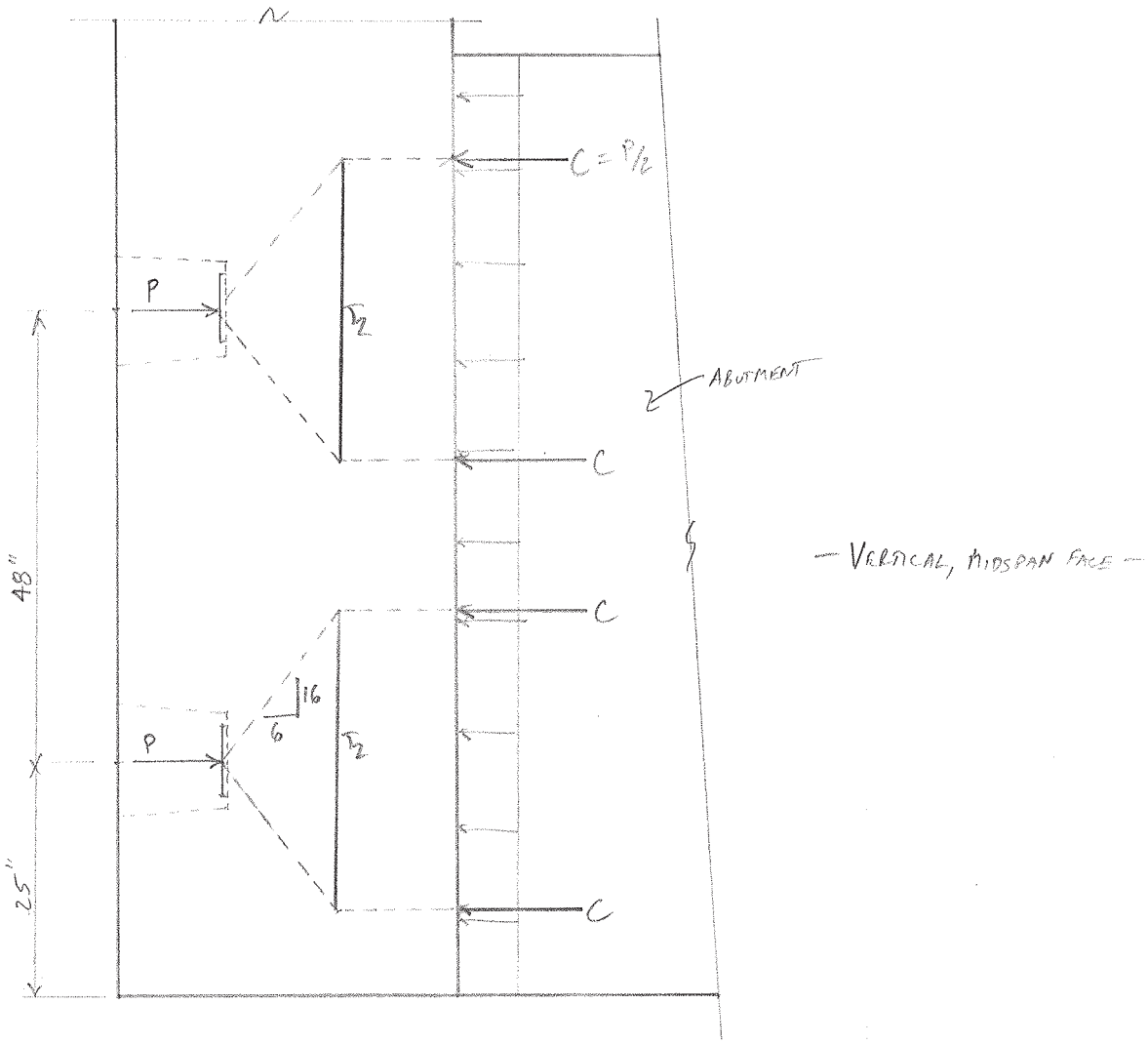

$T_2 = \frac{P}{2} \cdot \frac{16}{6} = 56\,kip$

$T_1 + T_2 = 112\,kip$ = TOTAL BURSTING FORCE, VERTICALLY

$\frac{112\,kip}{(0.9)60\,ksi} = 2.08\,in^2$ REQ'D $\equiv$ 7 ~ #5's

→ VTRANS DESIGN CALLS FOR #5's @ 12" EF WHICH PROVIDES 8 LEGS WITHIN JOINT REGION (2 FACES, 3.5' WIDTH) ∴ BURSTING STEEL SATISFIED WITH T&S STEEL.

→ NEED TO ADD HOOKS

→ PROVIDE 1-ADD'L LAYER OF #5's IN MIDDLE OF WING

Project: PITTSFIELD	Job No. 41176 E	Sheet: 3 of 5
Item: BUSTING STEEL	Designer: J. OLUND	Date: 1/16/14
	Checker:	Date:
HORIZONTAL STEEL		Grid: 1/10"

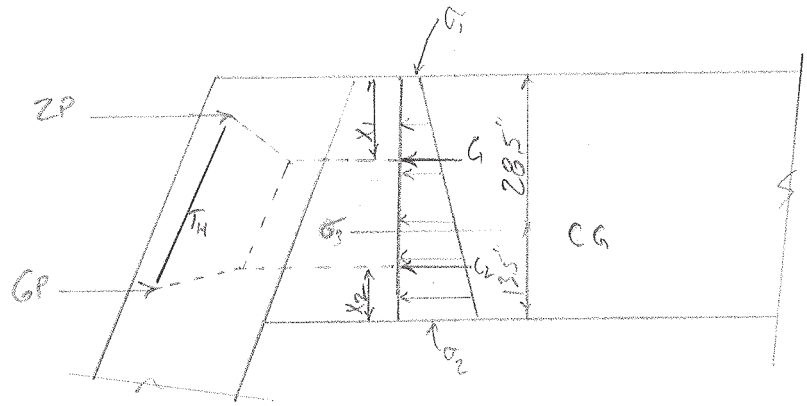

GEOMETRY:

$$\sigma_1 = \frac{P}{A} - \frac{P \cdot e}{S}$$

$$= \frac{8P}{42} - \frac{(8P)(7.5")}{\frac{42^2}{6}} = -0.0136P$$

$$\sigma_2 = \frac{P}{A} + \frac{Pe}{S} = 0.394P$$

$$\sigma_3 = 0.1905P$$

$$x_1 = \frac{2}{3}(28.5") - \frac{0.036}{0.036 + .1905} \cdot 28.5 = 17.1"$$

$$x_2 = \frac{13.5"}{3} \cdot \left(\frac{2 \cdot 0.1905 + 0.394}{0.1905 + 0.394}\right) = 5.97"$$ ⟵ IN-LINE WITH '6P' PT FORCE

TY·LIN INTERNATIONAL

Project: PITTSFIELD	Job No. 41762	Sheet: 4 of 5
Item: BURSTING STEEL	Designer: J. OLAND	Date: 1/16/14
	Checker:	Date:
HORIZ. STEEL		Grid: 1/10"

$\alpha = 20° + \tan^{-1}\left(\frac{1.96}{11.1}\right) = 30.01°$

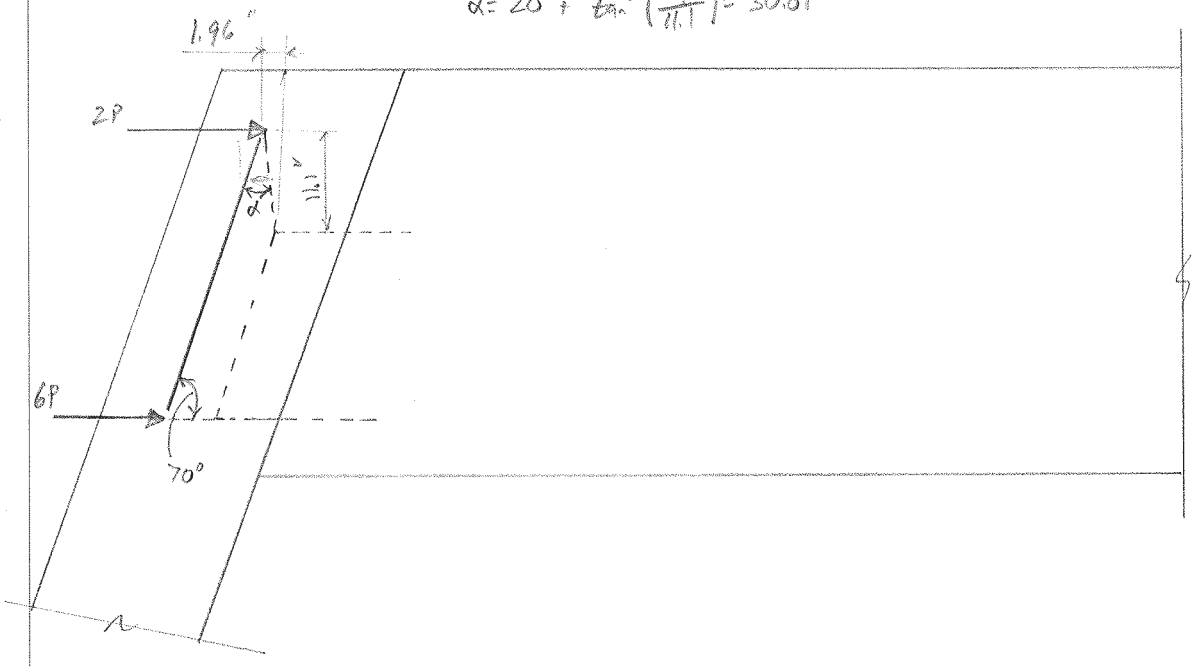

$T = \frac{2P}{\sin 30.01°} = 3.99P = 168 \text{ kip}$

$\frac{168^k}{0.9(60 \text{ ksi})} = 3.11 \text{ in}^2 \equiv 8 \text{ ea } \#6$'s

→ COMPRESSION FACE HAS #6'S @ 12" WHICH PROVIDES 9 #6'S MINIMUM ∴ T&S STEEL SATISFIES HORIZ. BURSTING STEEL REQ'S

→ STEEL NEEDS TO BE AHEAD OF APPLIED FORCE ∴ ADD #5 TIES TO CENTER OF WING, 2 @ EACH PT LOCATION

T·Y·LIN INTERNATIONAL

Project:	PITTSFIELD	Job No.	41762	Sheet:	5 of 5
Item:	BUNDLE SHEET	Designer:	J. OLMO	Date:	1/16/14
		Checker:		Date:	
	SUMMARY SKETCH			Grid:	1/10"

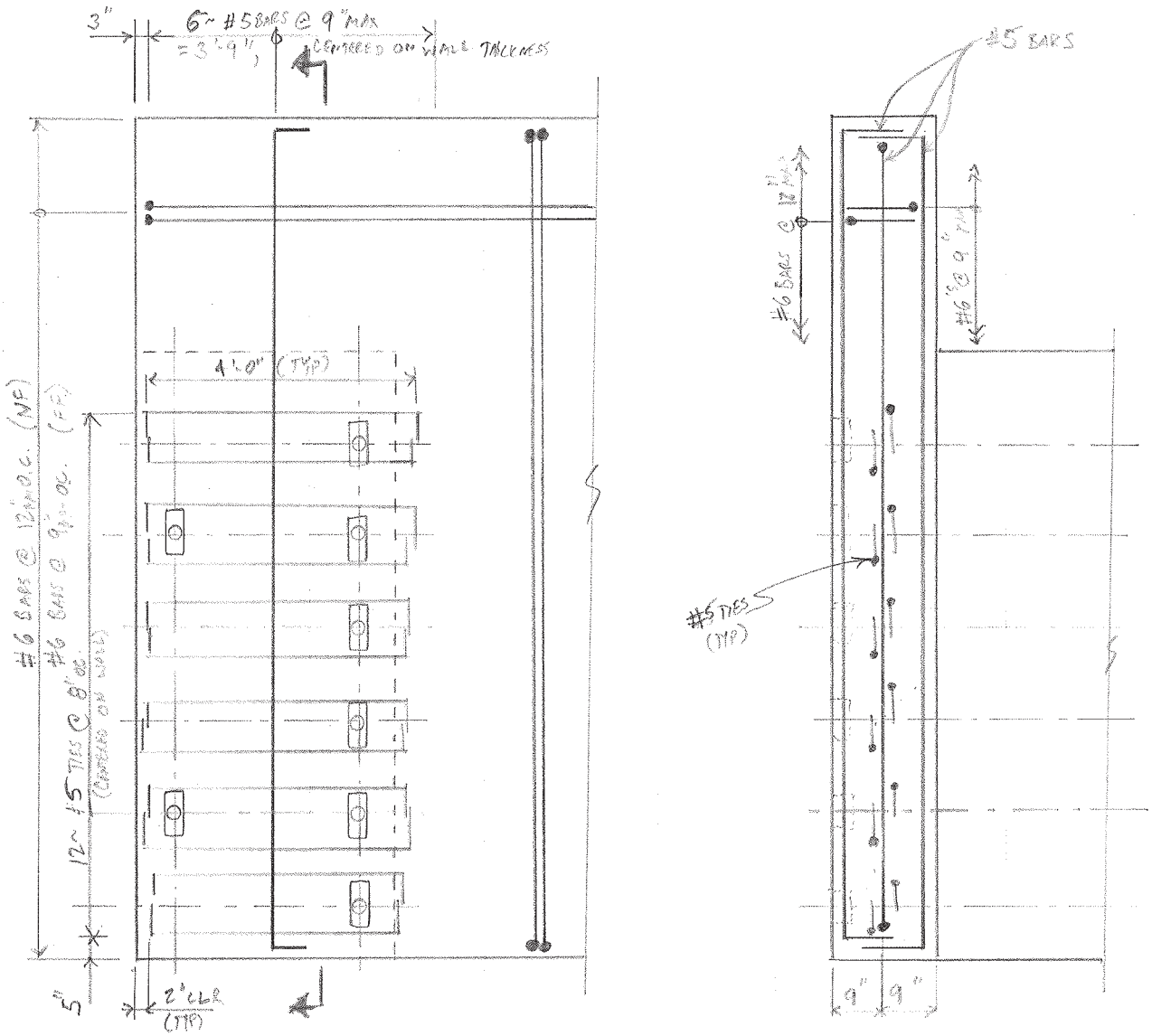

WINGWALL/ABUTMENT JOINT:

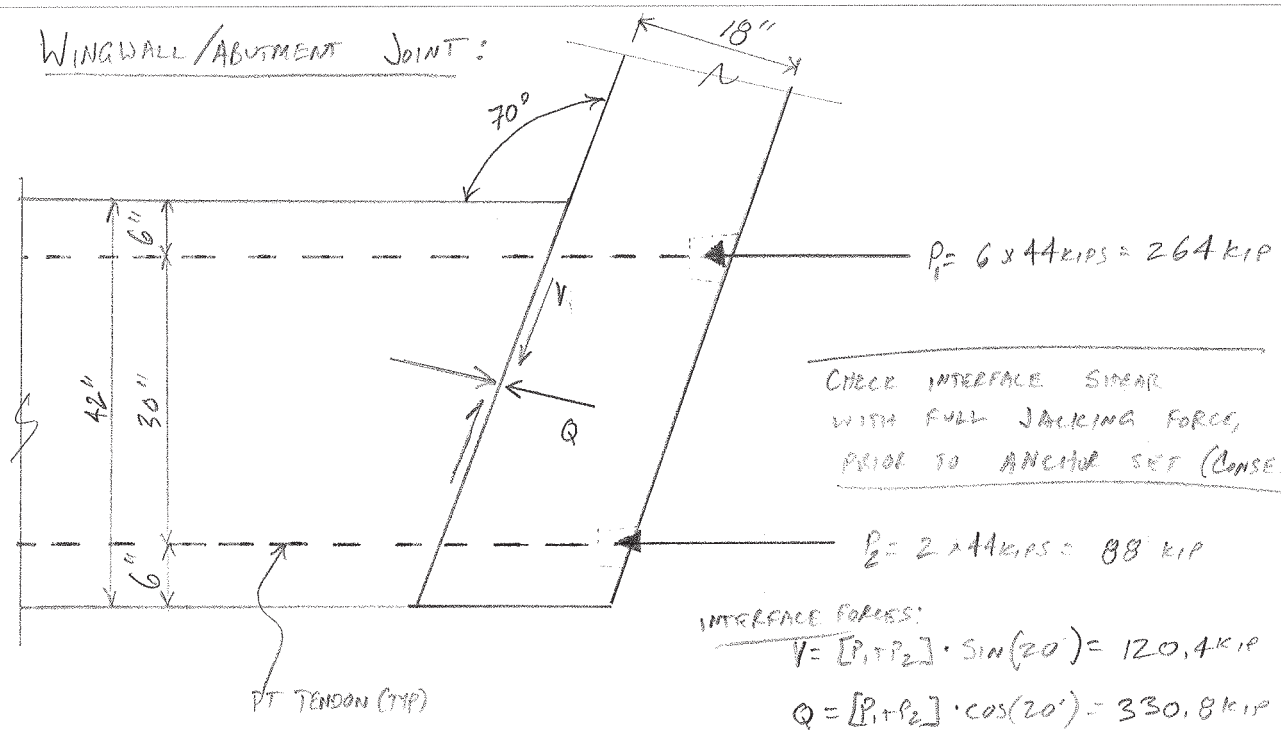

$P_1 = 6 \times 44\text{kips} = 264\text{ kip}$

$P_2 = 2 \times 44\text{kips} = 88\text{ kip}$

CHECK INTERFACE SHEAR WITH FULL JACKING FORCE, PRIOR TO ANCHOR SET (CONSERVATIVE)

INTERFACE FORCES:

$V = [P_1 + P_2] \cdot \sin(20^\circ) = 120.4\text{ kip}$

$Q = [P_1 + P_2] \cdot \cos(20^\circ) = 330.8\text{ kip}$

$$V_{ni} = \min \begin{cases} c \cdot A_{cv} + \mu (A_{vf} \cdot f_y + P_c) & [5.8.4.1\text{-}3] \\ K_1 \cdot f'_c A_{cv} & [5.8.4.1\text{-}4] \\ K_2 \cdot A_{cv} & [5.8.4.1\text{-}5] \end{cases}$$

ASSUME 1" EDGE CHAMFERS

$$A_{cv} = \left[\left[42'' - 2(1'')\right] / \cos(20^\circ)\right] \cdot 7.91' = 4{,}040\text{ in}^2$$

ABUT 2, EAST SIDE

$A_{vf} = 0\text{ in}^2$

$P_c = Q - LS - EH$

COHESION AND FRICTION FACTORS:

(AASHTO 5.8.4.3)

→ USE VALUES FOR 'CONCRETE PLACED AGAINST A CLEAN CONCRETE SURFACE, FREE OF LATANCE, BUT NOT INTENTIONALLY ROUGHENED'

→ INTERFACE SURFACES ARE MATCH CAST AND WILL HAVE INTERFACES PLACED TOGETHER WITH EPOXY.

$c = 0.075$ KSI

$\mu = 0.6$

$K_1 = 0.2$

$K_2 = 0.8$ KSI

WITH $P_c = 0$ KIPS (ASSUMING LS + EH > Q):

$V_{ni} = 303$ KIPS

$\phi = 0.90$ (5.5.4.2.1)

$\phi V_{ni} = 272.7$ KIPS >> $V_u = 1.25(120.4$ KIPS$) = 150.5$ KIPS

∴ INTERFACE SHEAR OK, PROVIDED BOND BETWEEN SURFACES IS NOT BROKEN

STRENGTH I LOADS:

FROM OTHER CALCULATIONS,

EH = 36 KIP

LS = 11.9 KIP

$R_u = 1.35EH + 1.75LS = 69.4$ KIP

→ WITH LONG TERM LOSSES AND 0.9 LOAD FACTOR, Q = 230 KIP & V = 84 KIP

$\phi V_{ni} = cA_{cv} + \mu \cdot P_c = 0.9\left[\left(\frac{1}{2}\right)(0.075)(4{,}040\,in^2) + 0.6\,(230)\right] = 260$ KIP >> $V_u = 84$ KIP

↳ ASSUME ONLY PARTIALLY BONDED

∴ INTERFACE SHEAR OK, CHECK SHEAR KEYS

T·Y·LIN INTERNATIONAL

Project: PITTSFIELD	Job No. 41762.00	Sheet: 3 of 3
Item: INTERFACE SHEAR	Designer: J. OLIND	Date: 1/9/14
	Checker:	Date:
		Grid: 1/10"

CHECK STANDARD VTRANS SHEAR KEY (STRUCTURES DETAIL SD-501.00)

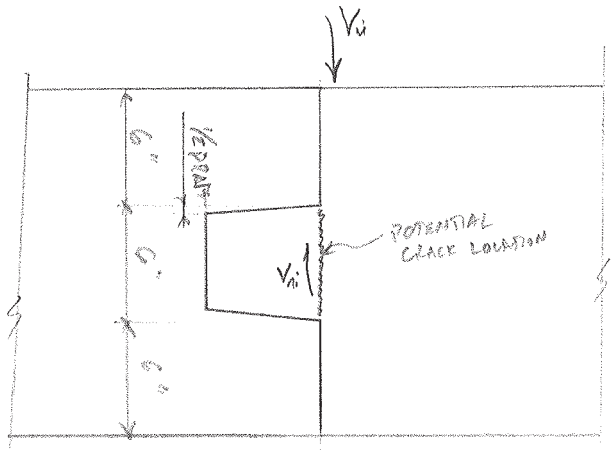

$V_u = 1.25(120.4\text{ kips}) = 150.5\text{ kips}$

COHESION AND FRICTION VALUES:

→ USE 'CONCRETE PLACED MONOLITHICALLY' & NEGLECT NORMAL FORCE

$c = 0.40\text{ ksi}$

$K_1 = 0.25$

$K_2 = 1.5\text{ ksi}$

$A_{cv} = (7.91')(0.5') = 569\text{ in}^2$

$\phi V_{ni} = (0.9)(0.4\text{ ksi})(569\text{ in}^2) = 204.8\text{ kips} > V_u = 150.5\text{ kips}$

INTERFACE SHEAR OK

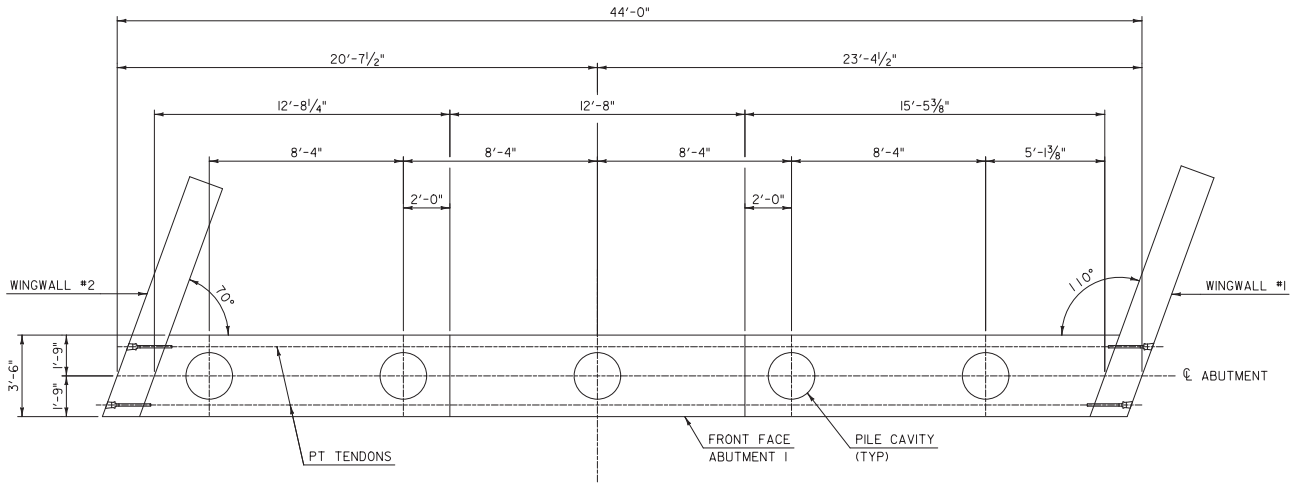

ABUTMENT #1 - PLAN

SCALE: ⅜" = 1'-0"

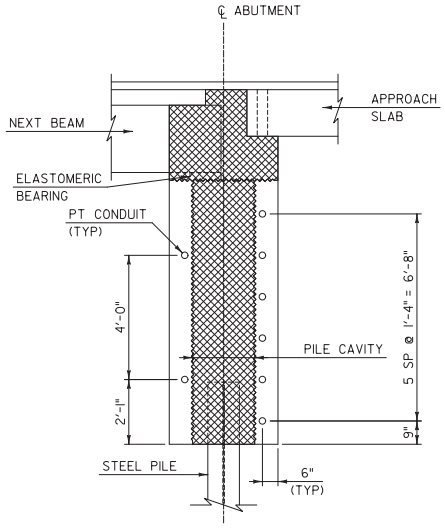

ABUTMENT TYPICAL

SCALE: ½" = 1'-0"

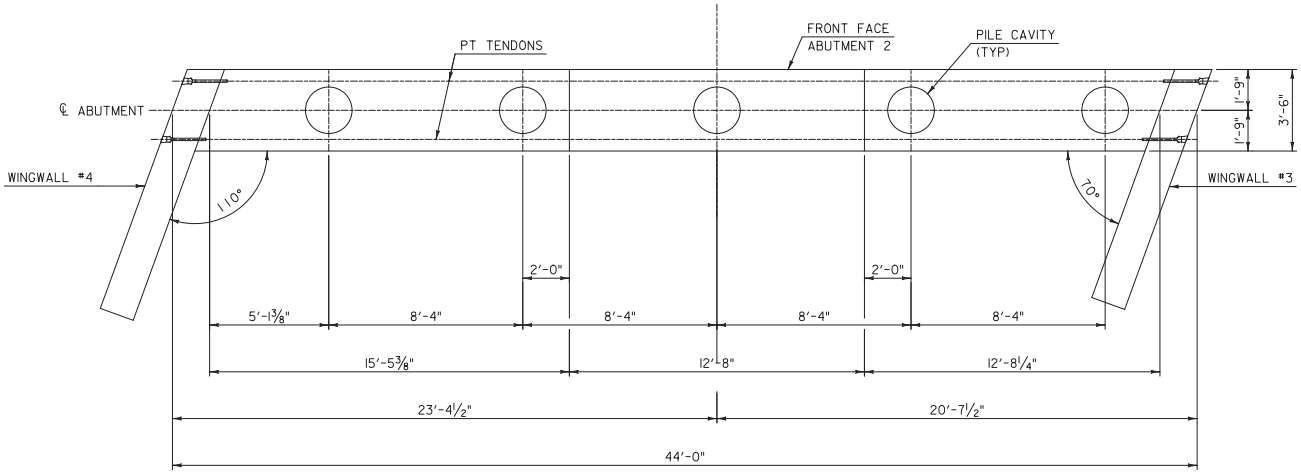

ABUTMENT #2 - PLAN

SCALE: ⅜" = 1'-0"

NOTES:

1. GEOMETRY SHOWN HEREIN IS AN UNDERSTANDING OF THE CONTRACTOR'S INTENDED PRECAST ABUTMENT CONSTRUCTION AND IS PROVIDED TO QUALIFY THE POST-TENSIONING DESIGN. DETAILS SHOWN HEREIN ARE INTENDED TO CONVEY TRANSVERSE POST-TENSIONING DESIGN ONLY. ALL GEOMETRY, MILD STEEL REINFORCEMENT, PROJECT NOTES, AND DETAILS NOT SHOWN HEREIN SHALL BE IN ACCORDANCE WITH THE ORIGINAL BRIDGE REPLACEMENT PLAN SET PREPARED BY VTRANS.

2. THERE SHALL BE A SINGLE POST-TENSIONING TENDON PER DUCT. POST-TENSIONING DESIGN VALUES ARE AS FOLLOWS:
   - TENDONS SHALL BE 0.6 INCH DIAMETER, AASHTO M 203 LOW RELAXATION 7-WIRE STRANDS.
   - JACKING FORCE PER TENDON = 42 KIPS.
   - ANCHOR SET SHALL BE ¼ INCH OR LESS.
   - APPARENT MODULUS OF ELASTICITY (TENDONS) = 28,500 KSI.

3. TENDON STRESSING SEQUENCE SHALL BEGIN NEAR THE CENTER OF THE ABUTMENT AND PROGRESS OUTWARD.

4. PILE CAVITIES SHALL BE FILLED PRIOR TO FULLY STRESSING THE TENDONS. TENDONS MAY BE JACKED TO 3 KIPS EACH PRIOR TO FILLING PILE CAVITIES.

TY·LIN INTERNATIONAL	PROJECT NAME: PITTSFIELD PROJECT NUMBER: ER BRF 022-1(23)	
	FILE NAME: z86e060bdrabut1.dgn PROJECT LEADER: J. OLUND DESIGNED BY: J. OLUND ABUTMENT 1 & 2 PLAN & SECTION	PLOT DATE: 3/3/2014 DRAWN BY: S. MORGAN CHECKED BY: D. MYERS SHEET 1 OF 2

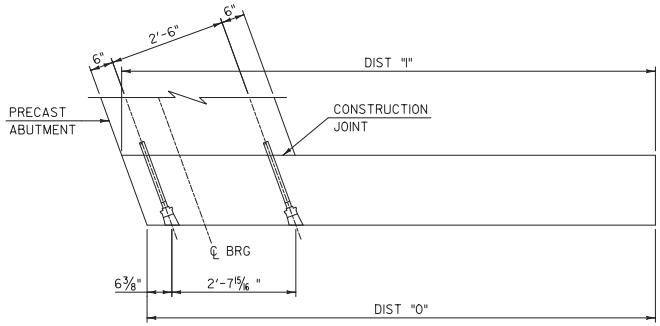

WWI PLAN

SCALE: 3/4" = 1'-0"

(REINFORCING STEEL NOT SHOWN FOR CLARITY)

WINGWALL DIMENSIONS				
	WINGWALL 1	WINGWALL 2	WINGWALL 3	WINGWALL 4
DIST "I"	11'-8 3/4"	10'-8 1/4"	10'-8 1/4"	11'-8 3/4"
DIST "O"	11'-2 1/4"	11'-2 3/4"	11'-2 3/4"	11'-2 1/4"

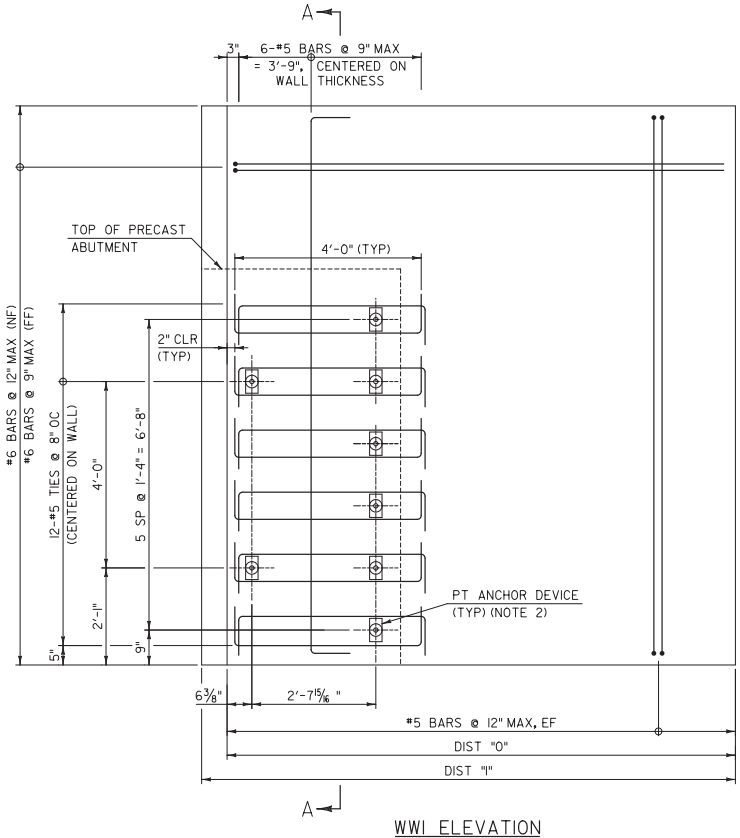

WWI ELEVATION

SCALE: 3/4" = 1'-0"

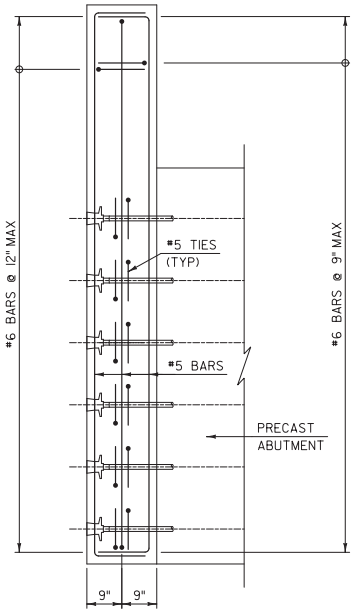

SECTION A-A WWI TYPICAL

SCALE: 3/4" = 1'-0"

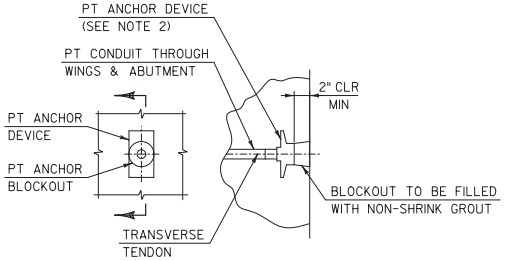

TRANSVERSE TENDON ANCHORAGE DETAIL

NOT TO SCALE

NOTES:

1. WWI SHOWN, OTHERS SHALL BE SIMILAR.
2. POST-TENSIONING ANCHOR DEVICE SHALL BE DYWIDAG ANCHOR CASTING GTI SI-06 OR SIMILAR.
3. PRECAST WINGWALL MILD STEEL REINFORCEMENT SHOWN SHALL BE USED IN PLACE OF REINFORCEMENT DETAILED IN THE ORIGINAL PLAN SET.
4. DIMENSIONS AND ELEVATIONS NOT SHOWN SHALL BE CONSISTENT WITH THE ORIGINAL PLAN SET.

TY·LIN INTERNATIONAL	PROJECT NAME: PITTSFIELD PROJECT NUMBER: ER BRF 022-1(23)
FILE NAME: z86e060bdrabutdet.dgn PROJECT LEADER: J. OLUND DESIGNED BY: T. POULIN WINGWALL DETAILS	PLOT DATE: 3/3/2014 DRAWN BY: S. MORGAN CHECKED BY: J. OLUND SHEET 2 OF 2