T·Y·LIN INTERNATIONAL

# Pittsfield Bridge 124

## VT Route 100
## Over
## South Branch Tweed River

**Pittsfield, VT**

**VTrans Project: ER BRF 022-1(23)**

## *Post-Tensioning Design Calculations*

**March 3, 2014**


Prepared by

T·Y·LIN INTERNATIONAL
engineers | planners | scientists
12 Northbrook Drive
Building A, Suite One
Falmouth, ME 04105

Joshua K. Olund, P.E.


STATE OF VERMONT
JOSHUA K. OLUND
NO. 72818
Structural Part II
LICENSED
PROFESSIONAL ENGINEER

3/3/2014

REVIEWED BY VTRANS 3-7-2014

# Table of Contents

1. LARSA Model

   a. Geometry

   b. Inputs

   c. Results

2. Post Processing Calculations

   a. Stress Checks (Service)

   b. PT model Verification Calculations

   c. Construction Loads

   d. Ultimate Capacity (Strength) Checks

   e. Bursting Steel Design

   f. Interface Shear Checks

# 1. LARSA Model

T·Y·LIN INTERNATIONAL

| | | |
|---|---|---|
| Project: PITTSFIELD | Job No. 411762 | Sheet: 1 of 4 |
| Item: LARSA MODEL INPUTS | Designer: J. OLIVO | Date: 1/7/2014 |
| | Checker: | Date: |
| GEOMETRY | | Grid: 1/10" |

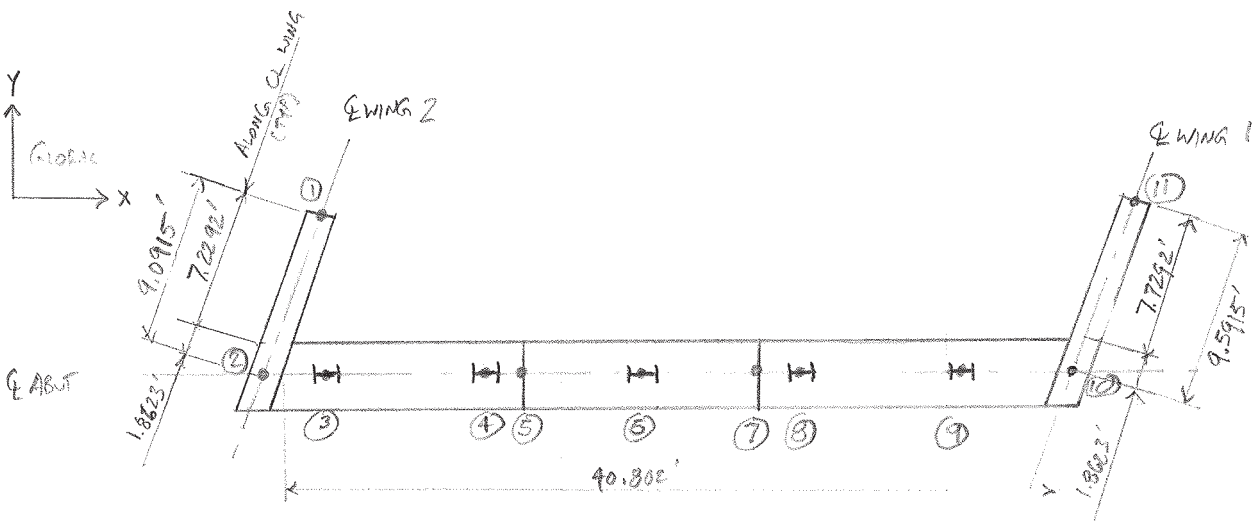


ABUT #1 PLAN

POINT 1 = [(0 + 9.0915 SIN 20), (0 + 9.0915 COS 20)] = (3.1095, 8.5432)

POINT 2 = (0,0)

POINT 3 = 2'-4 1/4" + 9"/COS 20° = (3.1523, 0)

POINT 4 = POINT 3 + 8.33' ∴ (11.4586, 0)

POINT 5 = POINT 4 + 2.0' ∴ (13.4586, 0)

POINT 6 = POINT 4 + 8.33' ∴ (19.8190, 0)

POINT 7 = POINT 5 + 12.67' ∴ (26.1523, 0)

POINT 8 = POINT 6 + 8.33' ∴ (28.1523, 0)

POINT 9 = POINT 8 + 8.33' ∴ (36.4856, 0)

POINT 10 = POINT 9 + (5'-1 3/8") + 9"/COS 20° = (42.3983, 0)

POINT 11 = [(42.3983 + 9.5915 SIN 20), (0 + 9.5915 COS 20)]

= (45.6788, 9.0131)

T·Y·LIN INTERNATIONAL

| | | |
|---|---|---|
| Project: PITTSFIELD | Job No. 411 762 | Sheet: 2 of 4 |
| Item: LARSA MODEL INPUTS | Designer: J. Olmos | Date: 1/9/14 |
| | Checker: | Date: |
| RESULT LOCATIONS | | Grid: 1/10" |

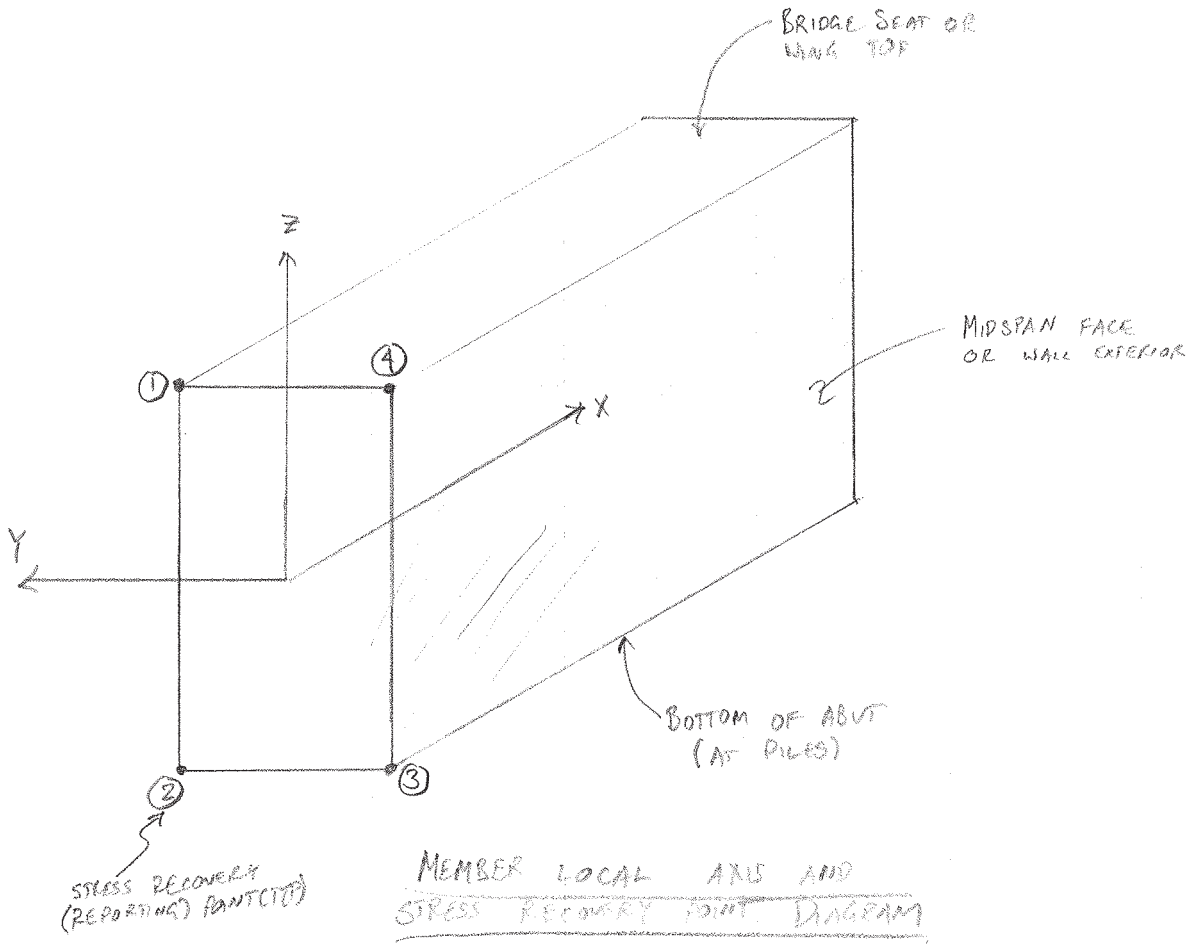


MEMBER LOCAL AXIS AND STRESS RECOVERY POINT DIAGRAM

TY·LIN INTERNATIONAL

| | | |
|---|---|---|
| Project: PITTSFIELD | Job No. 411762 | Sheet: 3 of 4 |
| Item: LARSA MODEL INPUTS | Designer: J. QUAND | Date: 1/7/14 |
| | Checker: | Date: |
| PT COORDINATES | | Grid: 1/10" |

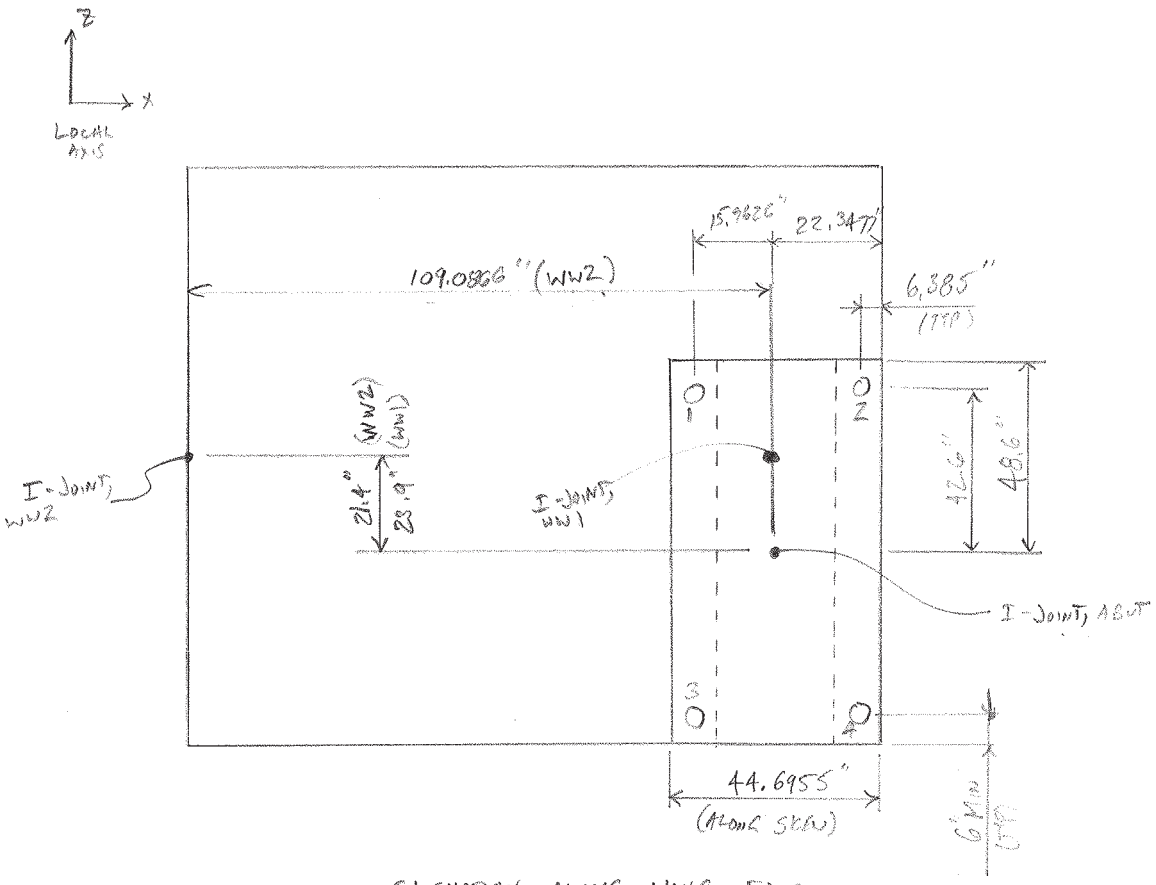


ELEVATION ALONG WING FACE

WINGWALL 2 CORNER DUCT COORDS

① = (x, y, z) = (93.124, 0, 21.2)

② = (125.0492, 0, 21.2)

③ = (93.124, 0, -64)

④ = (125.0492, 0, -64)

WINGWALL 1 CORNER COORDS

① = (15.9626, 0, 18.7)

② = (-15.9626, 0, 18.7)

③ = (15.9626, 0, -66.5)

④ = (-15.9626, 0, -66.5)

MAX # DUCTS PER SIDE = 2(42.6")/9" SPACING = 9.4 SPACES ∴ 10 DUCTS MAX EA. SIDE

NOMINAL, COULD BE CLOSER

T·Y·LIN INTERNATIONAL

| | | |
|---|---|---|
| Project: PITTSFIELD | Job No. 411762 | Sheet: 4 of 4 |
| Item: LARSA MODEL INPUTS | Designer: J. OLUND | Date: 1/7/14 |
| | Checker: | Date: |
| BOUNDARY CONDITIONS | | Grid: 1/10" |

→ POINTS 3, 4, 6, 8, 9 SUPPORTED VERTICALLY AND LONGITUDINALLY (FIX Z & Y) → DUE TO PILES & SUPERSTRUCTURE

→ POINTS 5 & 7 SUPPORTED LONGITUDINALLY (FIX Y) → DUE TO SUPERSTRUCTURE

→ FOR NUMERICAL STABILITY, FIX POINT 6 IN ALL TRANSLATIONAL DIRECTIONS

SUPERSTRUCTURE & CLOSURE LOADS:

→ ASSUME LATERAL LOAD FROM MINIMAL CLOSURE POUR IS NEGLIGABLE AND RH+LS WILL BE GREATER THAN TEMPORARY CONCRETE FLUID PRESSURE, THEREBY OFFSETTING & REPLACING APPLIED FLUID FORCE

→ SUPER & SUBSTRUCTURE WEIGHT IS EQUALLY/EVENLY DISTRIBUTED ALONG BRIDGE SEAT

• DEAD LOADS (DC)

NEXT BEAMS ≃ 1.6 KLF EA ∴ $\left(\frac{78'}{2} \cdot 1.6\text{KLF} \cdot 4\text{ BEAMS}\right) \cdot \frac{1}{40.8'} = 6.12\text{KLF}$

CLOSURES $= \left((0.75')(0.67') \cdot 0.15\text{KCF} \cdot 3 \cdot \frac{78'}{2}\right) \cdot \frac{1}{40.8'} = 0.22\text{KLF}$

RAILINGS $\simeq 2(67\text{ PLF}) \cdot \frac{78'}{2} \cdot \frac{1}{40.8'} = 0.13\text{KLF}$

END DIAPHRAGM $\simeq (35'' \text{ TALL}) \cdot (3' \text{ WIDE}) \cdot 0.15\text{KCF} = 1.31\text{KLF}$

(OMITTING NEXT BEAMS & APP SLAB SEAT)

TOTAL DC = 7.78 KLF

• DEAD LOADS (DW)

WEARING SURFACE $= (38\text{PSF}) \cdot \left(\frac{78'}{2}\right)(32'\text{ ROAD}) \cdot \frac{1}{40.8'} = \underline{1.16\text{KLF}}$

• LIVE LOADS (LL + IM)

$$\left[\underset{(\text{BLADE})}{2} \cdot \underset{(\text{IM})}{1.33} \cdot \underset{(\text{MP})}{1.0} \cdot \left[32^{\text{KIP}} + 32^{\text{KIP}}\left(\frac{64'}{78'}\right) + 8^{\text{KIP}}\left(\frac{50'}{78'}\right)\right] + 2 \cdot 1.0 \cdot \frac{78'}{2} \cdot 640\text{PLF}\right] \cdot \frac{1}{40.8'} = \underline{5.36\text{ KLF}}$$

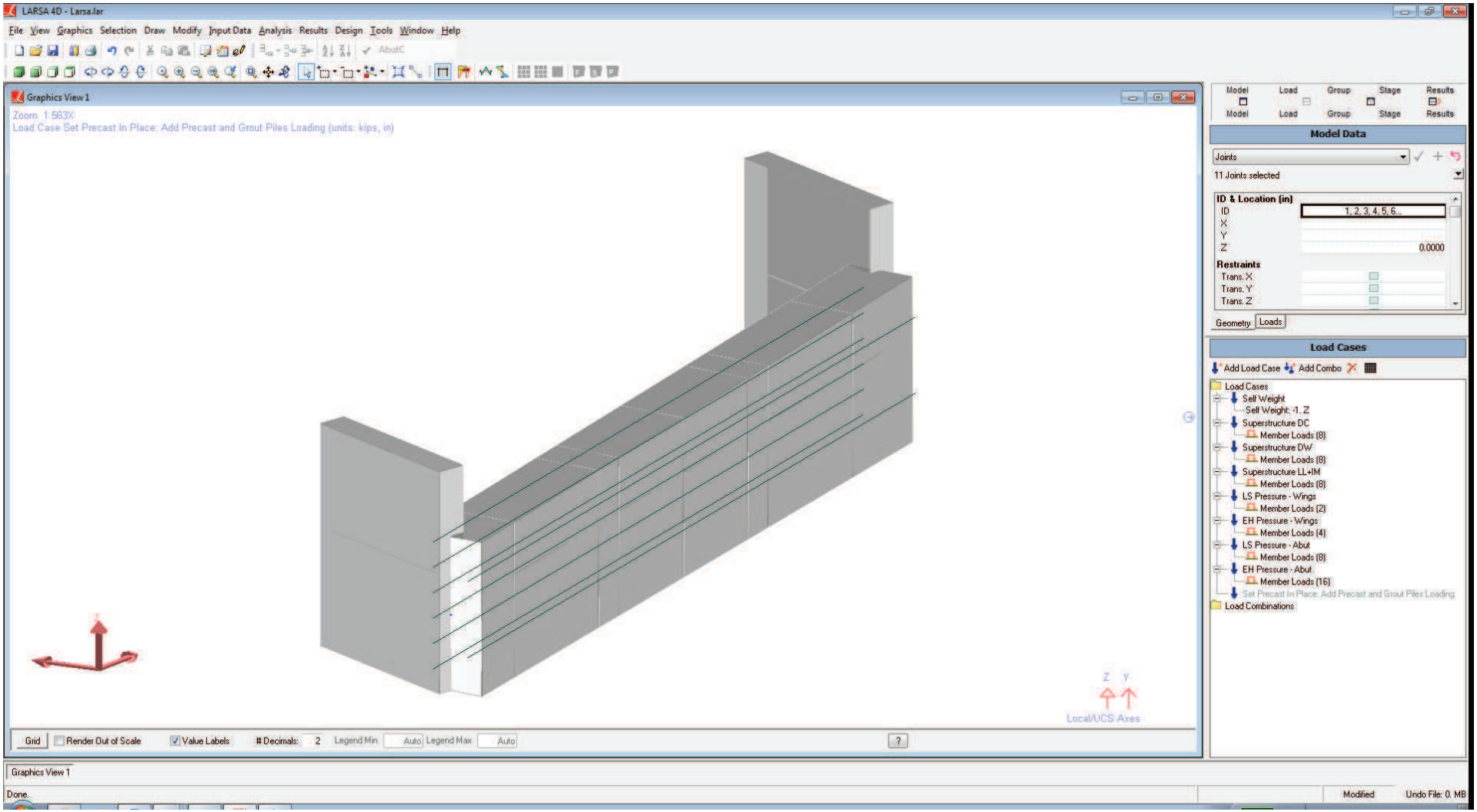
LARSA 4D - Larsa.lar
File View Graphics Selection Draw Modify Input Data Analysis Results Design Tools Window Help
Graphics View 1
Zoom 1.563X
Load Case Set Precast In Place: Add Precast and Grout Piles Loading (units: kips, in)
Model Load Group Stage Results
Model Data
Joints
11 Joints selected
ID & Location (in)
ID 1, 2, 3, 4, 5, 6...
X
Y
Z 0.0000
Restraints
Trans. X
Trans. Y
Trans. Z
Geometry Loads
Load Cases
Add Load Case Add Combo
Load Cases
Self Weight
Self Weight: -1. Z
Superstructure DC
Member Loads (8)
Superstructure DW
Member Loads (8)
Superstructure LL+IM
Member Loads (8)
LS Pressure - Wings
Member Loads (2)
EH Pressure - Wings
Member Loads (4)
LS Pressure - Abut
Member Loads (8)
EH Pressure - Abut
Member Loads (16)
Set Precast In Place: Add Precast and Grout Piles Loading
Load Combinations
Z Y
Local/UCS Axes
Grid Render Out of Scale Value Labels # Decimals: 2 Legend Min Auto Legend Max Auto
Graphics View 1
Done.
Modified
Undo File: 0. MB

## INPUT : Material Properties

| Name | Modulus of Elasticity (kips/in²) | Poisson Ratio | Shear Modulus (kips/in²) | Unit Weight (kips/in³) | Thermal Expansion (1/ °F *10^-6) | Assigned |
|---|---|---|---|---|---|---|
| Fc_5 | 4,031.00 | 0.1704 | 1,722.00 | 0.0001 | 5.500000 | Yes |
| PT Steel | 28,500.00 | 0.2946 | 11,006.90 | 0.0003 | 6.500000 | Yes |

## INPUT : Sections

| Name | Section Area (in²) | Shear Area in yy (in²) | Shear Area in zz (in²) | Torsion Constant (in^4) | Inertia Izz (in^4) | Inertia Iyy (in^4) | Plastic Modulus Zyy (in³) | Plastic Modulus Zzz (in³) | Perimeter (in) | Material Time-Effect | Ductility | Residual Strength (%) | Assigned |
|---|---|---|---|---|---|---|---|---|---|---|---|---|---|
| Wingwall 1 | 2,610.0000 | 2,175.0000 | 2,175.0000 | 2.5975e5 | 70,470.0000 | 4.5729e6 | 0.0000 | 0.0000 | 326.0000 | New Time- | 50. | 0. | Yes |
| Wingwall 2 | 2,520.0000 | 2,100.0000 | 2,100.0000 | 2.4993e5 | 68,040.0000 | 4.1160e6 | 0.0000 | 0.0000 | 316.0000 | New Time- | 50. | 0. | Yes |
| Abut 1 | 4,082.4000 | 3,402.0000 | 3,402.0000 | 1.7396e6 | 6.0011e5 | 3.2142e6 | 0.0000 | 0.0000 | 278.4000 | New Time- | 50. | 0. | Yes |
| Abut 2 | 4,105.0800 | 3,420.9000 | 3,420.9000 | 1.7530e6 | 6.0345e5 | 3.2680e6 | 0.0000 | 0.0000 | 279.4800 | New Time- | 50. | 0. | Yes |
| Abut 3 | 4,164.3000 | 3,470.2500 | 3,470.2500 | 1.7882e6 | 6.1215e5 | 3.4115e6 | 0.0000 | 0.0000 | 282.3000 | New Time- | 50. | 0. | Yes |
| Abut 4 | 4,178.5800 | 3,482.1500 | 3,482.1500 | 1.7967e6 | 6.1425e5 | 3.4467e6 | 0.0000 | 0.0000 | 282.9800 | New Time- | 50. | 0. | Yes |
| Abut 5 | 4,223.9400 | 3,519.9500 | 3,519.9500 | 1.8239e6 | 6.2092e5 | 3.5602e6 | 0.0000 | 0.0000 | 285.1400 | New Time- | 50. | 0. | Yes |
| Abut 6 | 4,268.8800 | 3,557.4000 | 3,557.4000 | 1.8509e6 | 6.2753e5 | 3.6750e6 | 0.0000 | 0.0000 | 287.2800 | New Time- | 50. | 0. | Yes |
| Abut 7 | 4,283.1600 | 3,569.3000 | 3,569.3000 | 1.8596e6 | 6.2962e5 | 3.7120e6 | 0.0000 | 0.0000 | 287.9600 | New Time- | 50. | 0. | Yes |
| Abut 8 | 4,342.8000 | 3,619.0000 | 3,619.0000 | 1.8958e6 | 6.3839e5 | 3.8693e6 | 0.0000 | 0.0000 | 290.8000 | New Time- | 50. | 0. | Yes |
| Abut 9 | 4,384.8000 | 3,654.0000 | 3,654.0000 | 1.9215e6 | 6.4457e5 | 3.9826e6 | 0.0000 | 0.0000 | 292.8000 | New Time- | 50. | 0. | Yes |

## INPUT : Section Stress Points

| Name | Point 1 Y (in) | Point 1 Z (in) | Point 2 Y (in) | Point 2 Z (in) | Point 3 Y (in) | Point 3 Z (in) | Point 4 Y (in) | Point 4 Z (in) | Point 5 Y (in) | Point 5 Z (in) | Point 6 Y (in) | Point 6 Z (in) |
|---|---|---|---|---|---|---|---|---|---|---|---|---|
| Wingwall 1 | 9.0000 | 72.5000 | 9.0000 | -72.5000 | -9.0000 | -72.5000 | -9.0000 | 72.5000 | (NONE) | (NONE) | (NONE) | (NONE) |
| Wingwall 2 | 9.0000 | 70.0000 | 9.0000 | -70.0000 | -9.0000 | -70.0000 | -9.0000 | 70.0000 | (NONE) | (NONE) | (NONE) | (NONE) |
| Abut 1 | 21.0000 | 48.6000 | 21.0000 | -48.6000 | -21.0000 | -48.6000 | -21.0000 | 48.6000 | (NONE) | (NONE) | (NONE) | (NONE) |
| Abut 2 | 21.0000 | 48.8700 | 21.0000 | -48.8700 | -21.0000 | -48.8700 | -21.0000 | 48.8700 | (NONE) | (NONE) | (NONE) | (NONE) |
| Abut 3 | 21.0000 | 49.5750 | 21.0000 | -49.5750 | -21.0000 | -49.5750 | -21.0000 | 49.5750 | (NONE) | (NONE) | (NONE) | (NONE) |
| Abut 4 | 21.0000 | 49.7450 | 21.0000 | -49.7450 | -21.0000 | -49.7450 | -21.0000 | 49.7450 | (NONE) | (NONE) | (NONE) | (NONE) |
| Abut 5 | 21.0000 | 50.2850 | 21.0000 | -50.2850 | -21.0000 | -50.2850 | -21.0000 | 50.2850 | (NONE) | (NONE) | (NONE) | (NONE) |
| Abut 6 | 21.0000 | 50.8200 | 21.0000 | -50.8200 | -21.0000 | -50.8200 | -21.0000 | 50.8200 | (NONE) | (NONE) | (NONE) | (NONE) |
| Abut 7 | 21.0000 | 50.9900 | 21.0000 | -50.9900 | -21.0000 | -50.9900 | -21.0000 | 50.9900 | (NONE) | (NONE) | (NONE) | (NONE) |
| Abut 8 | 21.0000 | 51.7000 | 21.0000 | -51.7000 | -21.0000 | -51.7000 | -21.0000 | 51.7000 | (NONE) | (NONE) | (NONE) | (NONE) |

## INPUT : Section Stress Points

| Name | Point 1 Y (in) | Point 1 Z (in) | Point 2 Y (in) | Point 2 Z (in) | Point 3 Y (in) | Point 3 Z (in) | Point 4 Y (in) | Point 4 Z (in) | Point 5 Y (in) | Point 5 Z (in) | Point 6 Y (in) | Point 6 Z (in) |
|---|---|---|---|---|---|---|---|---|---|---|---|---|
| Abut 9 | 21.0000 | 52.2000 | 21.0000 | -52.2000 | -21.0000 | -52.2000 | -21.0000 | 52.2000 | (NONE) | (NONE) | (NONE) | (NONE) |

## INPUT : Section Dimensions

| Name | Shape | Dimension D1 | Dimension D2 | Dimension D3 | Dimension D4 | Dimension D5 | Dimension D6 |
|---|---|---|---|---|---|---|---|
| Wingwall 1 | Rectangle | 18.0000 | 145.0000 | | | | |
| Wingwall 2 | Rectangle | 18.0000 | 140.0000 | | | | |
| Abut 1 | Rectangle | 42.0000 | 97.2000 | | | | |
| Abut 2 | Rectangle | 42.0000 | 97.7400 | | | | |
| Abut 3 | Rectangle | 42.0000 | 99.1500 | | | | |
| Abut 4 | Rectangle | 42.0000 | 99.4900 | | | | |
| Abut 5 | Rectangle | 42.0000 | 100.5700 | | | | |
| Abut 6 | Rectangle | 42.0000 | 101.6400 | | | | |
| Abut 7 | Rectangle | 42.0000 | 101.9800 | | | | |
| Abut 8 | Rectangle | 42.0000 | 103.4000 | | | | |
| Abut 9 | Rectangle | 42.0000 | 104.4000 | | | | |

## INPUT : Joints

| ID | X (in) | Y (in) | Z (in) | Translation DOF | Rotation DOF | Displacement UCS | Assignment |
|---|---|---|---|---|---|---|---|
| 1 | 37.3140 | 102.5064 | 0.0000 | all free | all free | Global | Yes |
| 2 | 0.0000 | 0.0000 | 0.0000 | all free | all free | Global | Yes |
| 3 | 37.8276 | 0.0000 | 0.0000 | y, z fixed | x fixed | Global | Yes |
| 4 | 137.5032 | 0.0000 | 0.0000 | y, z fixed | x fixed | Global | Yes |
| 5 | 161.5032 | 0.0000 | 0.0000 | y fixed | all free | Global | Yes |
| 6 | 237.8280 | 0.0000 | 0.0000 | all fixed | x fixed | Global | Yes |
| 7 | 313.8276 | 0.0000 | 0.0000 | y fixed | all free | Global | Yes |
| 8 | 337.8276 | 0.0000 | 0.0000 | y, z fixed | x fixed | Global | Yes |
| 9 | 437.8272 | 0.0000 | 0.0000 | y, z fixed | x fixed | Global | Yes |
| 10 | 508.7796 | 0.0000 | 0.0000 | all free | all free | Global | Yes |
| 11 | 548.1456 | 108.1572 | 0.0000 | all free | all free | Global | Yes |

## INPUT : Members

| ID | I-Joint | J-Joint | Span | Type | Section at Start | Section at End | Material | Prestress Force (kips) | Length (in) | Rigid Zone from Start (x/L) | Rigid Zone from End (x/L) | Orientation Angle (deg) | Casting (day) | Structure Group |
|---|---|---|---|---|---|---|---|---|---|---|---|---|---|---|
| 1 | 1 | 2 | - | Beam | Wingwall 2 | Wingwall 2 | Fc_5 | 0.0000 | 109.0866 | 0.0000 | 0.0000 | 0.0000 | 1 | Wing2 |
| 2 | 2 | 3 | - | Beam | Abut 1 | Abut 2 | Fc_5 | 0.0000 | 37.8285 | 0.0000 | 0.0000 | 0.0000 | 7 | AbutA |
| 3 | 3 | 4 | - | Beam | Abut 2 | Abut 3 | Fc_5 | 0.0000 | 99.6781 | 0.0000 | 0.0000 | 0.0000 | 7 | AbutA |
| 4 | 4 | 5 | - | Beam | Abut 3 | Abut 4 | Fc_5 | 0.0000 | 24.0006 | 0.0000 | 0.0000 | 0.0000 | 7 | AbutA |
| 5 | 5 | 6 | - | Beam | Abut 4 | Abut 5 | Fc_5 | 0.0000 | 76.3267 | 0.0000 | 0.0000 | 0.0000 | 14 | AbutB |
| 6 | 6 | 7 | - | Beam | Abut 5 | Abut 6 | Fc_5 | 0.0000 | 76.0015 | 0.0000 | 0.0000 | 0.0000 | 14 | AbutB |
| 7 | 7 | 8 | - | Beam | Abut 6 | Abut 7 | Fc_5 | 0.0000 | 24.0006 | 0.0000 | 0.0000 | 0.0000 | 7 | AbutC |
| 8 | 8 | 9 | - | Beam | Abut 7 | Abut 8 | Fc_5 | 0.0000 | 100.0021 | 0.0000 | 0.0000 | 0.0000 | 7 | AbutC |
| 9 | 9 | 10 | - | Beam | Abut 8 | Abut 9 | Fc_5 | 0.0000 | 70.9542 | 0.0000 | 0.0000 | 0.0000 | 7 | AbutC |
| 10 | 10 | 11 | - | Beam | Wingwall 1 | Wingwall 1 | Fc_5 | 0.0000 | 115.0985 | 0.0000 | 0.0000 | 0.0000 | 1 | Wing1 |

## INPUT : Member End Offsets

| ID | I-Offset X (in) | I-Offset Y (in) | I-Offset Z (in) | J-Offset X (in) | J-Offset Y (in) | J-Offset Z (in) |
|---|---|---|---|---|---|---|
| 1 | 0.0000 | 0.0000 | 21.4000 | 0.0000 | 0.0000 | 21.4000 |
| 2 | 0.0000 | 0.0000 | 0.0000 | 0.0000 | 0.0000 | 0.2677 |
| 3 | 0.0000 | 0.0000 | 0.2677 | 0.0000 | 0.0000 | 0.9729 |
| 4 | 0.0000 | 0.0000 | 0.9729 | 0.0000 | 0.0000 | 1.1428 |
| 5 | 0.0000 | 0.0000 | 1.1428 | 0.0000 | 0.0000 | 1.6828 |
| 6 | 0.0000 | 0.0000 | 1.6828 | 0.0000 | 0.0000 | 2.2206 |
| 7 | 0.0000 | 0.0000 | 2.2206 | 0.0000 | 0.0000 | 2.3904 |
| 8 | 0.0000 | 0.0000 | 2.3904 | 0.0000 | 0.0000 | 3.0980 |
| 9 | 0.0000 | 0.0000 | 3.0980 | 0.0000 | 0.0000 | 3.6000 |
| 10 | 0.0000 | 0.0000 | 23.9000 | 0.0000 | 0.0000 | 23.9000 |

## INPUT : Tendons

| Tendon Name | Design Group | Material | Exposure | Strand Area (per strand) | # of Strands | Jacking Force @ Start | Jacking Force @ End | Jacking End | Anchor Set (in) | Wobble Coefficient | Curvature Friction Coefficie | Peak Stress Ratio - | Peak Stress Ratio - | Elongation After | Elongation After | Elongation @ Left of | Elongation @ Right of |
|---|---|---|---|---|---|---|---|---|---|---|---|---|---|---|---|---|---|
| New Tendon | (none) | PT Steel | Post-Tension | 0.2170 | 1 | 44 | 42.0000 | End | 0.2500 | 0.0002 | 0.2300 | 0.8000 | 0.8000 | 3.2852 | 0 | 0 | 0 |
| New Tendon | (none) | PT Steel | Post-Tension | 0.2170 | 1 | 44 | 42.0000 | End | 0.2500 | 0.0002 | 0.2300 | 0.8000 | 0.8000 | 3.4096 | 0 | 0 | 0 |
| New Tendon | (none) | PT Steel | Post-Tension | 0.2170 | 1 | 44 | 42.0000 | End | 0.2500 | 0.0002 | 0.2300 | 0.8000 | 0.8000 | 3.4117 | 0 | 0 | 0 |

## INPUT : Tendons

| Tendon Name | Design Group | Material | Exposure | Strand Area (per strand) | # of Strands | Jacking Force @ Start | Jacking Force @ End | Jacking End | Anchor Set (in) | Wobble Coefficient | Curvature Friction Coefficie | Peak Stress Ratio - | Peak Stress Ratio - | Elongation After | Elongation After | Elongation @ Left of | Elongation @ Right of |
|---|---|---|---|---|---|---|---|---|---|---|---|---|---|---|---|---|---|
| New Tendon | (none) | PT Steel | Post-Tension | 0.2170 | 1 | 44 | 42.0000 | End | 0.2500 | 0.0002 | 0.2300 | 0.8000 | 0.8000 | 3.2852 | 0 | 0 | 0 |
| New Tendon | (none) | PT Steel | Post-Tension | 0.2170 | 1 | 44 | 42.0000 | End | 0.2500 | 0.0002 | 0.2300 | 0.8000 | 0.8000 | 3.2852 | 0 | 0 | 0 |
| New Tendon | (none) | PT Steel | Post-Tension | 0.2170 | 1 | 44 | 42.0000 | End | 0.2500 | 0.0002 | 0.2300 | 0.8000 | 0.8000 | 3.2852 | 0 | 0 | 0 |
| New Tendon | (none) | PT Steel | Post-Tension | 0.2170 | 1 | 44 | 42.0000 | End | 0.2500 | 0.0002 | 0.2300 | 0.8000 | 0.8000 | 3.2852 | 0 | 0 | 0 |
| New Tendon | (none) | PT Steel | Post-Tension | 0.2170 | 1 | 44 | 42.0000 | End | 0.2500 | 0.0002 | 0.2300 | 0.8000 | 0.8000 | 3.2852 | 0 | 0 | 0 |

## INPUT : More Material Properties

| Name | Yield Stress (kips/in²) | Post-yield to Initial Slope Ratio | Concrete Strength Specimen | Concrete fc28 or Steel Fu (kips/in²) | Concrete Cement Hardening Type | Tendon GUTS (kips/in²) | Material Time-Effect | Assigned |
|---|---|---|---|---|---|---|---|---|
| Fc_5 | 0.00 | 0.020 | Cylinder | 5.00 | Normal | 0.00 | New Time-Dep Property | Yes |
| PT Steel | 243.00 | 0.020 | Cylinder | 270.00 | Not Concrete | 270.00 | (NONE) | Yes |

## INPUT : CEB-FIP 90

| Name | Creep Factor | Shrinkage Factor | Relaxation Factor | Steel Relaxation Type | Assigned |
|---|---|---|---|---|---|
| New Time-Dep Property | 1.0000 | 1.0000 | 1.0000 | Improved(Class 2) | Yes |

## TENDON New Tendon 1

| Point Type | Reference Object Type | Reference Object or Range | Offset X (in) | Offset Y (in) | Offset Z (in) | X Reference | Y Reference | Z Reference | Curvature Type | | | Width |
|---|---|---|---|---|---|---|---|---|---|---|---|---|
| geometry | member | 1 | 93.1240 | 0.0000 | 19.0000 | Start | Reference Line | Reference Line | No Curve | | | |
| path only | member | 2-9 | | | | | | | | | | |
| geometry | member | 10 | 15.9626 | 0.0000 | 16.5000 | Start | Reference Line | Reference Line | No Curve | | | |

## TENDON New Tendon 7

| Point Type | Reference Object Type | Reference Object or Range | Offset X (in) | Offset Y (in) | Offset Z (in) | X Reference | Y Reference | Z Reference | Curvature Type | | | Width |
|---|---|---|---|---|---|---|---|---|---|---|---|---|
| geometry | member | 1 | 125.0495 | 0.0000 | 3.0000 | Start | Reference Line | Reference Line | No Curve | | | |
| path only | member | 2-10 | | | | | | | | | | |
| geometry | member | 9 | -15.0000 | -15.0000 | 20.6944 | End | Reference Line | Reference Line | No Curve | | | |

## TENDON New Tendon 8

| Point Type | Reference Object Type | Reference Object or Range | Offset X (in) | Offset Y (in) | Offset Z (in) | X Reference | Y Reference | Z Reference | Curvature Type | | | Width |
|---|---|---|---|---|---|---|---|---|---|---|---|---|
| geometry | member | 1 | 125.0495 | 0.0000 | -45.0000 | Start | Reference Line | Reference Line | No Curve | | | |
| path only | member | 2-10 | | | | | | | | | | |
| geometry | member | 9 | -15.0000 | -15.0000 | -27.3068 | End | Reference Line | Reference Line | No Curve | | | |

## TENDON New Tendon 2

| Point Type | Reference Object Type | Reference Object or Range | Offset X (in) | Offset Y (in) | Offset Z (in) | X Reference | Y Reference | Z Reference | Curvature Type | | | Width |
|---|---|---|---|---|---|---|---|---|---|---|---|---|
| geometry | member | 1 | 93.1240 | 0.0000 | 3.0000 | Start | Reference Line | Reference Line | No Curve | | | |
| path only | member | 2-9 | | | | | | | | | | |
| geometry | member | 10 | 15.9626 | 0.0000 | 0.5000 | Start | Reference Line | Reference Line | No Curve | | | |

## TENDON New Tendon 3

| Point Type | Reference Object Type | Reference Object or Range | Offset X (in) | Offset Y (in) | Offset Z (in) | X Reference | Y Reference | Z Reference | Curvature Type | | | Width |
|---|---|---|---|---|---|---|---|---|---|---|---|---|
| geometry | member | 1 | 93.1240 | 0.0000 | -13.0000 | Start | Reference Line | Reference Line | No Curve | | | |
| path only | member | 2-9 | | | | | | | | | | |
| geometry | member | 10 | 15.9626 | 0.0000 | -15.5000 | Start | Reference Line | Reference Line | No Curve | | | |

## TENDON New Tendon 4

| Point Type | Reference Object Type | Reference Object or Range | Offset X (in) | Offset Y (in) | Offset Z (in) | X Reference | Y Reference | Z Reference | Curvature Type | | | Width |
|---|---|---|---|---|---|---|---|---|---|---|---|---|
| geometry | member | 1 | 93.1240 | 0.0000 | -29.0000 | Start | Reference Line | Reference Line | No Curve | | | |
| path only | member | 2-9 | | | | | | | | | | |
| geometry | member | 10 | 15.9626 | 0.0000 | -31.5000 | Start | Reference Line | Reference Line | No Curve | | | |

## TENDON New Tendon 5

| Point Type | Reference Object Type | Reference Object or Range | Offset X (in) | Offset Y (in) | Offset Z (in) | X Reference | Y Reference | Z Reference | Curvature Type | | | Width |
|---|---|---|---|---|---|---|---|---|---|---|---|---|
| geometry | member | 1 | 93.1240 | 0.0000 | -45.0000 | Start | Reference Line | Reference Line | No Curve | | | |
| path only | member | 2-9 | | | | | | | | | | |

## TENDON New Tendon 5

| Point Type | Reference Object Type | Reference Object or Range | Offset X (in) | Offset Y (in) | Offset Z (in) | X Reference | Y Reference | Z Reference | Curvature Type | | | Width |
|---|---|---|---|---|---|---|---|---|---|---|---|---|
| geometry | member | 10 | 15.9626 | 0.0000 | -47.5000 | Start | Reference Line | Reference Line | No Curve | | | |

## TENDON New Tendon 6

| Point Type | Reference Object Type | Reference Object or Range | Offset X (in) | Offset Y (in) | Offset Z (in) | X Reference | Y Reference | Z Reference | Curvature Type | | | Width |
|---|---|---|---|---|---|---|---|---|---|---|---|---|
| geometry | member | 1 | 93.1240 | 0.0000 | -61.0000 | Start | Reference Line | Reference Line | No Curve | | | |
| path only | member | 2-9 | | | | | | | | | | |
| geometry | member | 10 | 15.9626 | 0.0000 | -63.5000 | Start | Reference Line | Reference Line | No Curve | | | |

# TENDON New Tendon 1, Graph

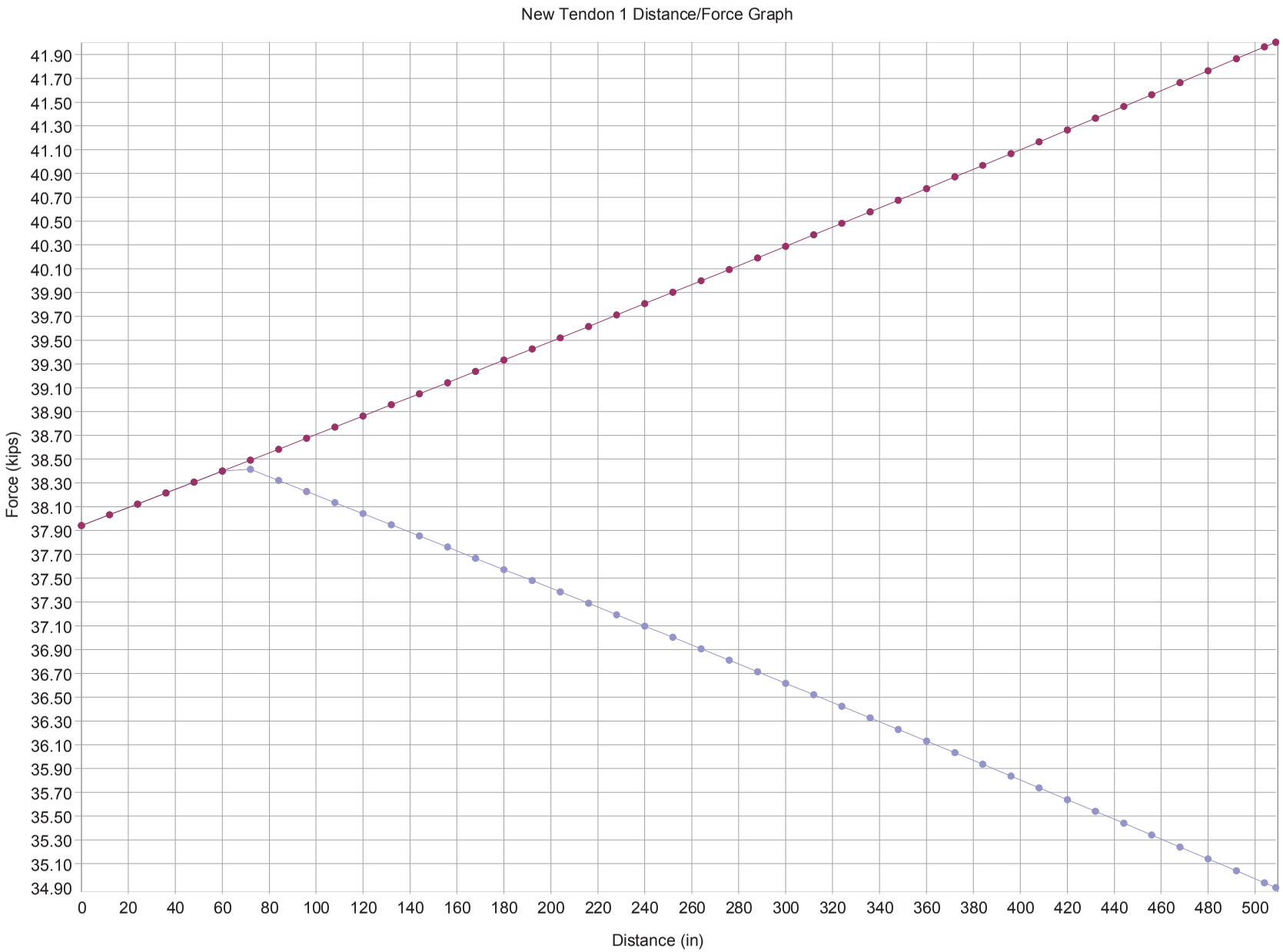

# TENDON New Tendon 7, Graph

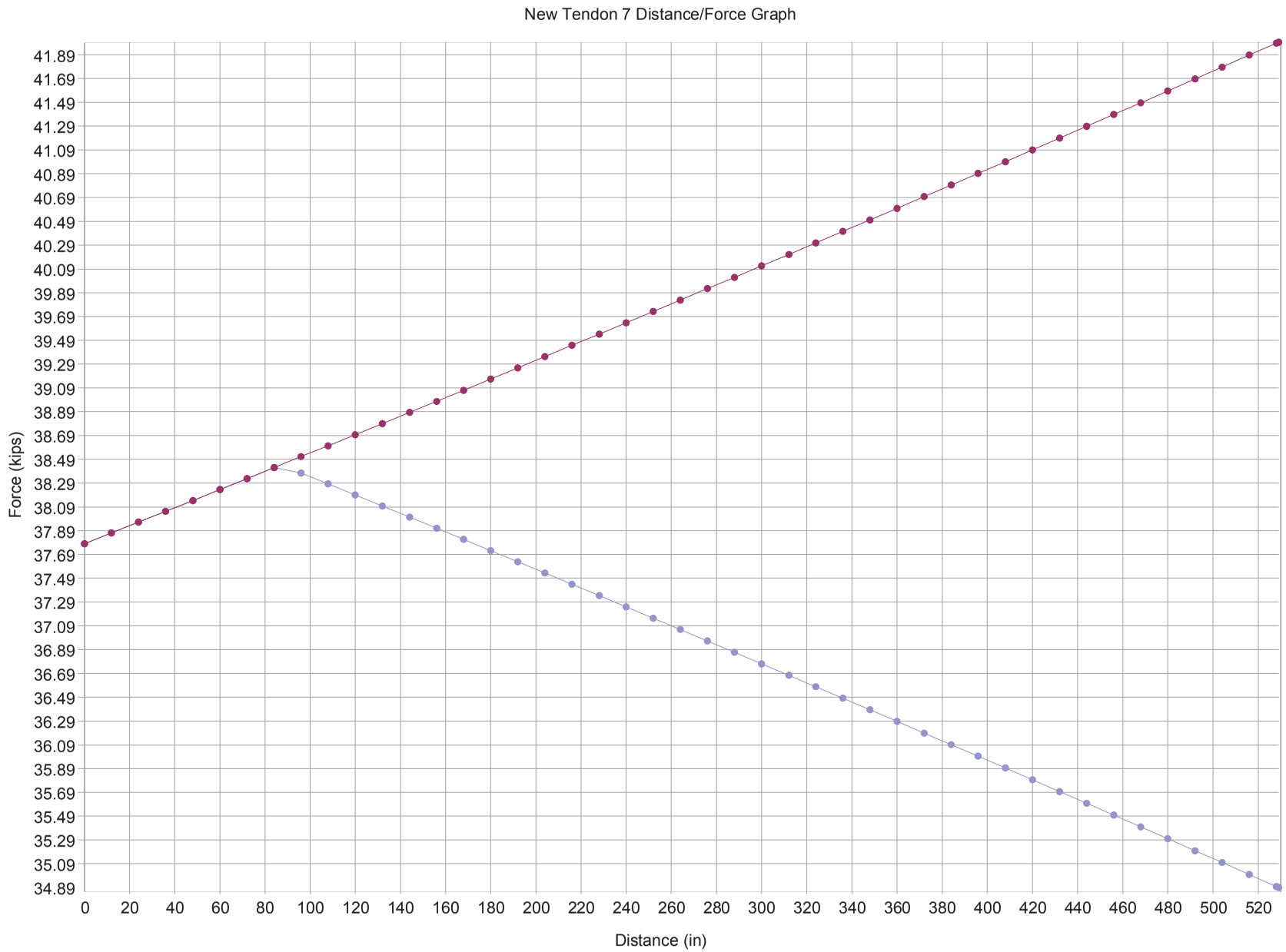

# TENDON New Tendon 8, Graph

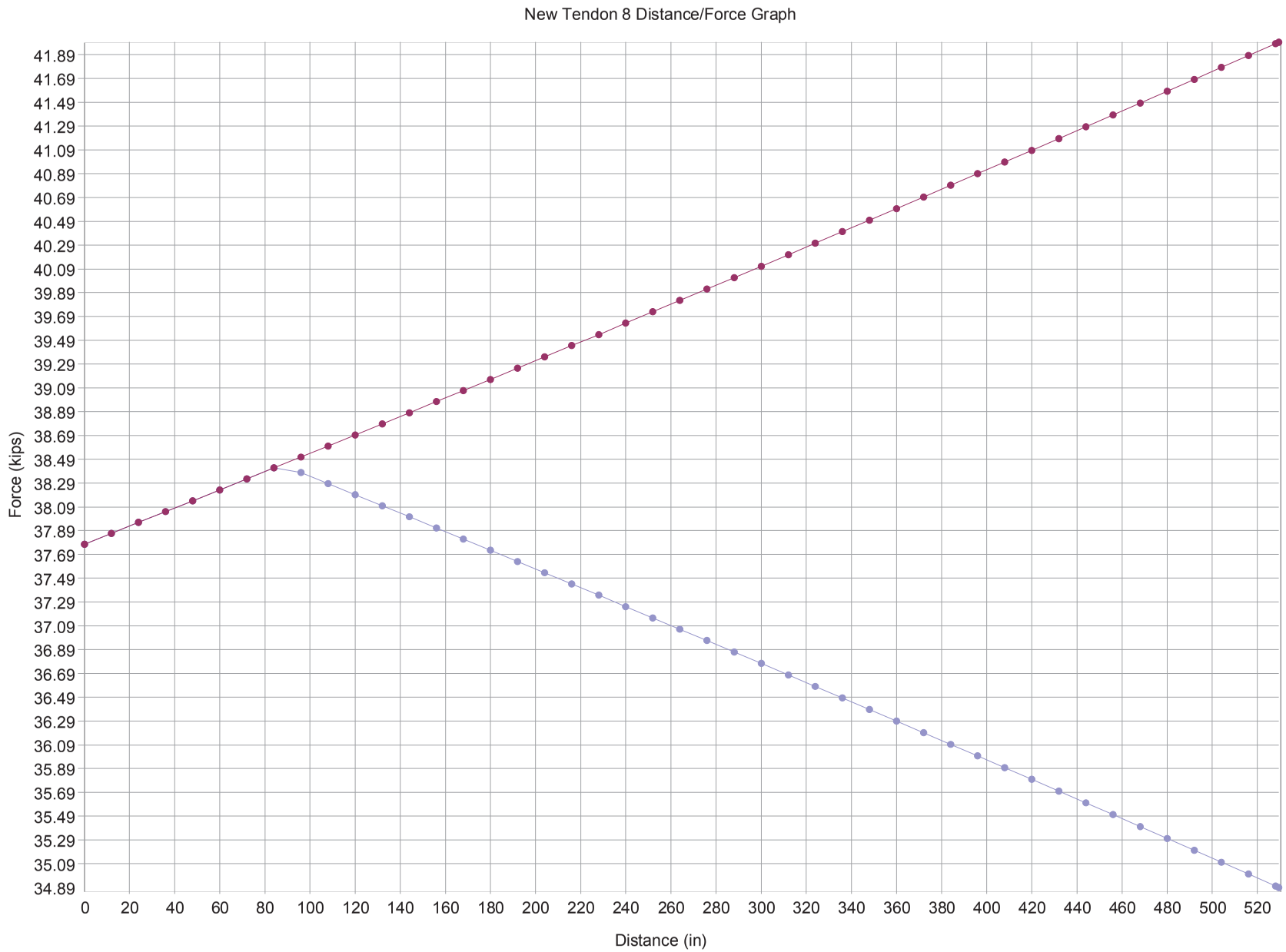

# TENDON New Tendon 2, Graph

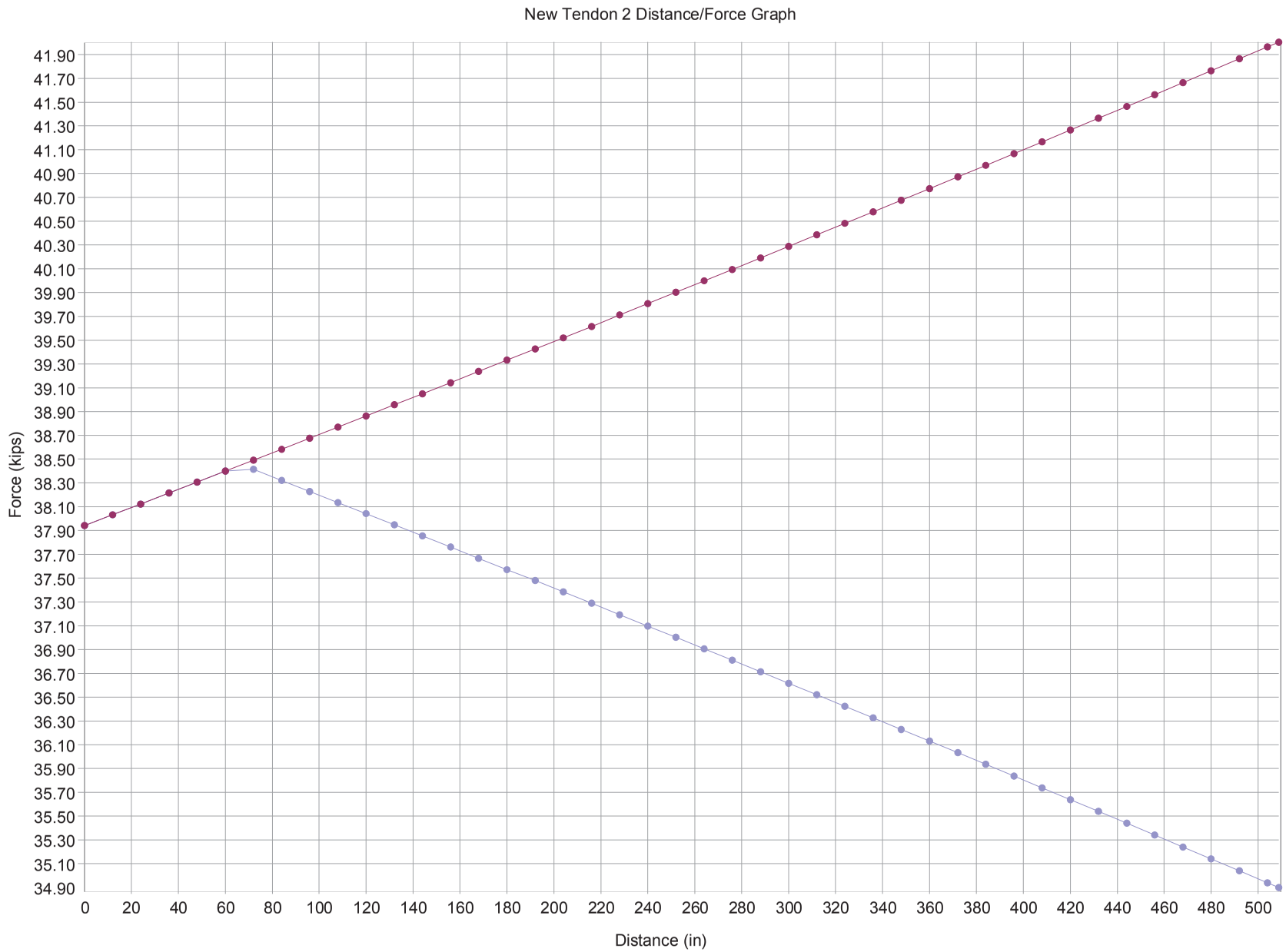

# TENDON New Tendon 3, Graph

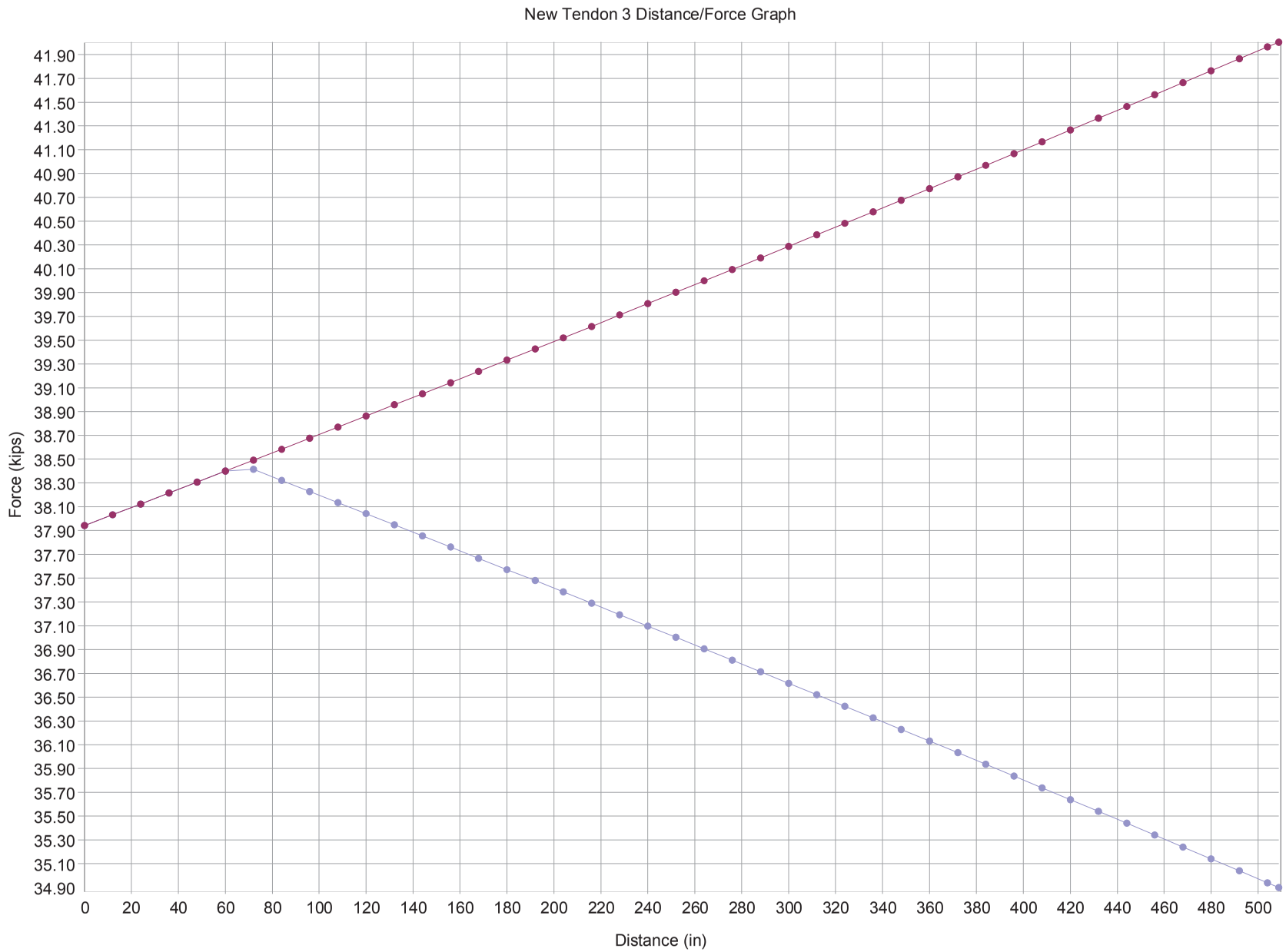

# TENDON New Tendon 4, Graph

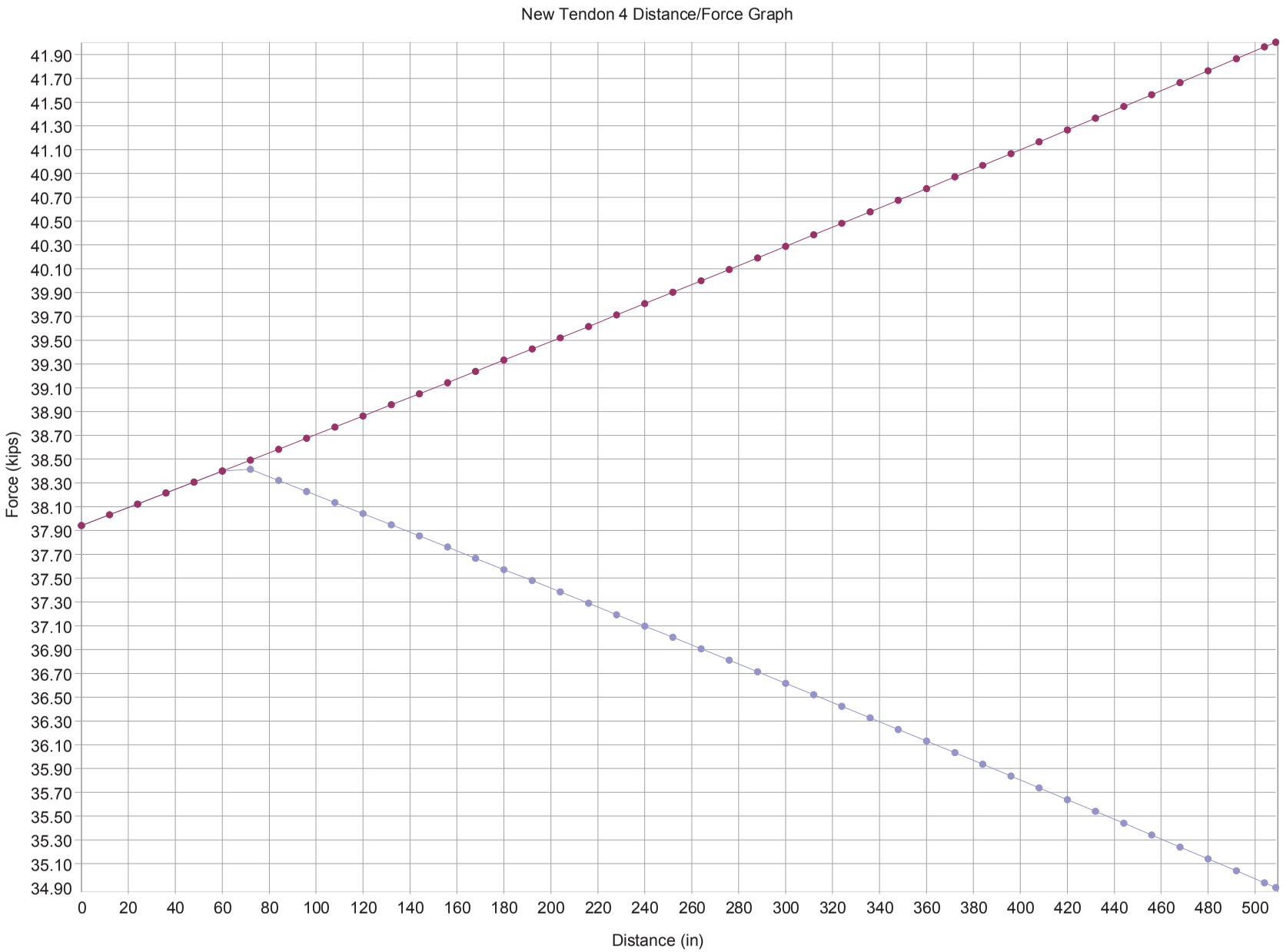

# TENDON New Tendon 5, Graph

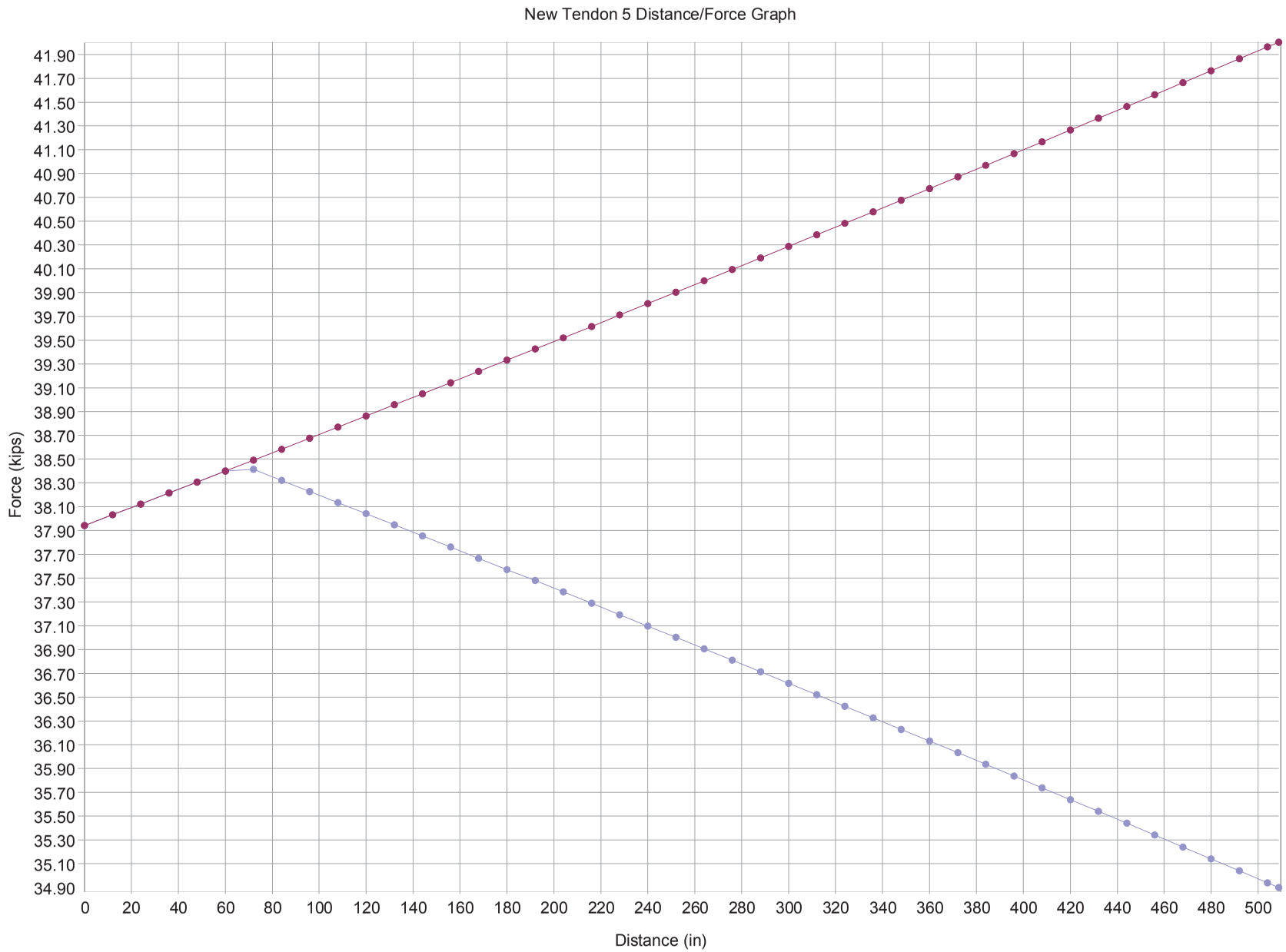

# TENDON New Tendon 6, Graph

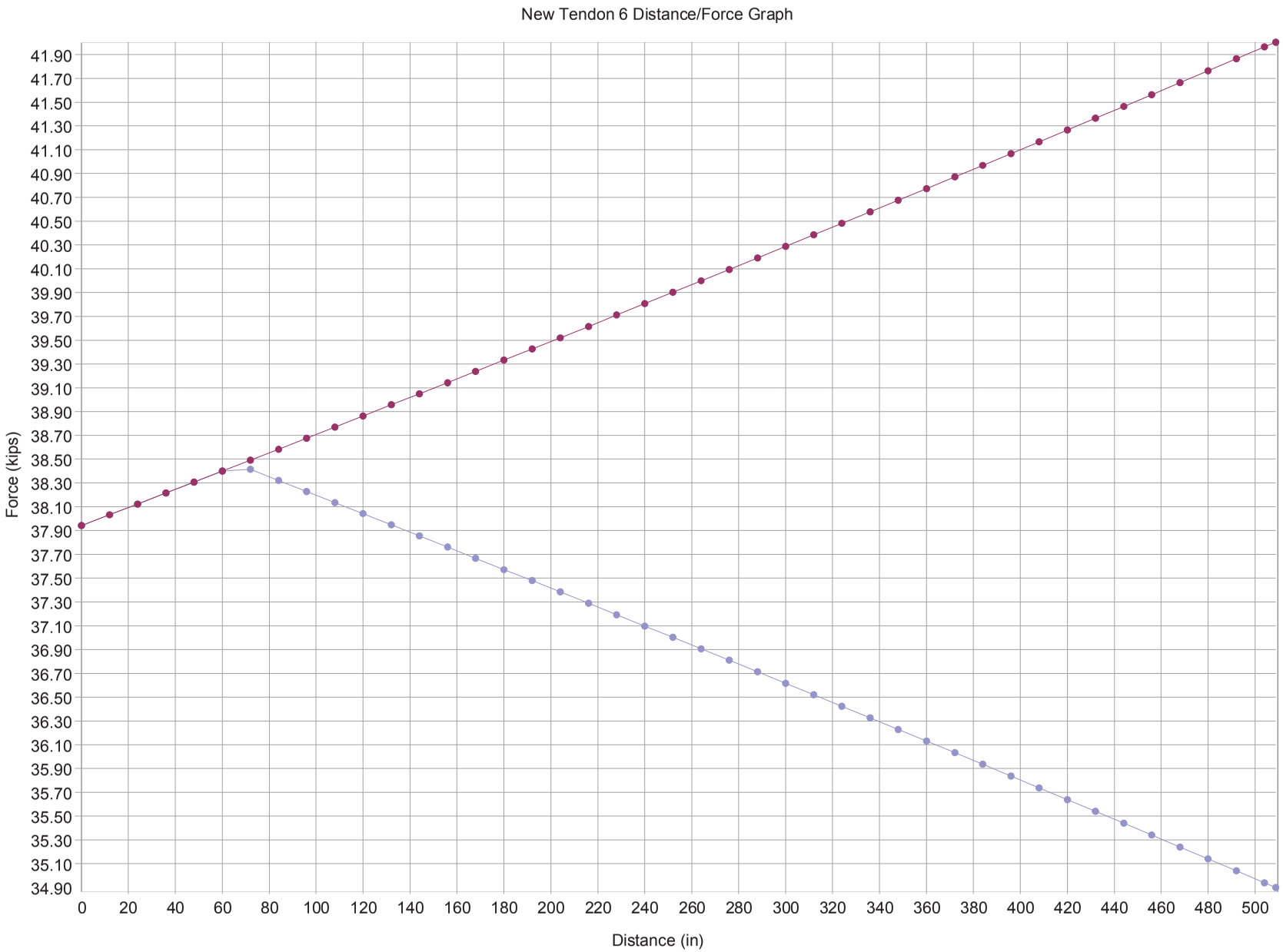

## Load Cases

| ID | Name | Analysis Type | Class | Status | Weight Factor X | Weight Factor Y | Weight Factor Z | Is Dynamic Mass? | Assigned to Load Combinati | # of Joint Loads | # of Support Loads | # of Member Loads | # of Member | # of Plate Loads | # of Moving Loads | # of THA Loading | # of THA Initial |
|---|---|---|---|---|---|---|---|---|---|---|---|---|---|---|---|---|---|
| 1 | Self Weight | Static | None | Activ | 0.0000 | 0.0000 | -1.0000 | No | Yes | 0 | 0 | 0 | 0 | 0 | 0 | 0 | 0 |
| 2 | Superstructure DC | Static | Dead Load | Activ | 0.0000 | 0.0000 | 0.0000 | No | Yes | 0 | 0 | 8 | 0 | 0 | 0 | 0 | 0 |
| 3 | Superstructure DW | Static | Dead Load | Activ | 0.0000 | 0.0000 | 0.0000 | No | Yes | 0 | 0 | 8 | 0 | 0 | 0 | 0 | 0 |
| 4 | Superstructure LL+IM | Static | Dead Load | Activ | 0.0000 | 0.0000 | 0.0000 | No | Yes | 0 | 0 | 8 | 0 | 0 | 0 | 0 | 0 |
| 5 | LS Pressure - Wings | Static | Live Load | Activ | 0.0000 | 0.0000 | 0.0000 | No | Yes | 0 | 0 | 2 | 0 | 0 | 0 | 0 | 0 |
| 6 | EH Pressure - Wings | Static | Earth Pressure | Activ | 0.0000 | 0.0000 | 0.0000 | No | Yes | 0 | 0 | 4 | 0 | 0 | 0 | 0 | 0 |
| 7 | LS Pressure - Abut | Static | Live Load | Activ | 0.0000 | 0.0000 | 0.0000 | No | Yes | 0 | 0 | 8 | 0 | 0 | 0 | 0 | 0 |
| 8 | EH Pressure - Abut | Static | Earth Pressure | Activ | 0.0000 | 0.0000 | 0.0000 | No | Yes | 0 | 0 | 16 | 0 | 0 | 0 | 0 | 0 |
| 9 | Set Precast In Place: Add | Static | None | Inacti | 0.0000 | 0.0000 | 0.0000 | No | No | 0 | 0 | 0 | 0 | 0 | 0 | 0 | 0 |

## LOAD CASE Superstructure DC, Member Loads

| Member | Type | Direction | Magnitude at Start (kips or kips-in) | Magnitude at End (kips or kips-in) | Start Position (x/L) | End Position from start (x/L) |
|---|---|---|---|---|---|---|
| 2 | Uniform Force | Global Z | -0.6480 | | 0.0000 | 1.0000 |
| 3 | Uniform Force | Global Z | -0.6480 | | 0.0000 | 1.0000 |
| 4 | Uniform Force | Global Z | -0.6480 | | 0.0000 | 1.0000 |
| 5 | Uniform Force | Global Z | -0.6480 | | 0.0000 | 1.0000 |
| 6 | Uniform Force | Global Z | -0.6480 | | 0.0000 | 1.0000 |
| 7 | Uniform Force | Global Z | -0.6480 | | 0.0000 | 1.0000 |
| 8 | Uniform Force | Global Z | -0.6480 | | 0.0000 | 1.0000 |
| 9 | Uniform Force | Global Z | -0.6480 | | 0.0000 | 1.0000 |

## LOAD CASE Superstructure DW, Member Loads

| Member | Type | Direction | Magnitude at Start (kips or kips-in) | Magnitude at End (kips or kips-in) | Start Position (x/L) | End Position from start (x/L) |
|---|---|---|---|---|---|---|
| 2 | Uniform Force | Global Z | -0.0960 | | 0.0000 | 1.0000 |
| 3 | Uniform Force | Global Z | -0.0960 | | 0.0000 | 1.0000 |
| 4 | Uniform Force | Global Z | -0.0960 | | 0.0000 | 1.0000 |
| 5 | Uniform Force | Global Z | -0.0960 | | 0.0000 | 1.0000 |
| 6 | Uniform Force | Global Z | -0.0960 | | 0.0000 | 1.0000 |
| 7 | Uniform Force | Global Z | -0.0960 | | 0.0000 | 1.0000 |

## LOAD CASE Superstructure DW, Member Loads

| Member | Type | Direction | Magnitude at Start (kips or kips-in) | Magnitude at End (kips or kips-in) | Start Position (x/L) | End Position from start (x/L) |
|---|---|---|---|---|---|---|
| 8 | Uniform Force | Global Z | -0.0960 | | 0.0000 | 1.0000 |
| 9 | Uniform Force | Global Z | -0.0960 | | 0.0000 | 1.0000 |

## LOAD CASE Superstructure LL+IM, Member Loads

| Member | Type | Direction | Magnitude at Start (kips or kips-in) | Magnitude at End (kips or kips-in) | Start Position (x/L) | End Position from start (x/L) |
|---|---|---|---|---|---|---|
| 2 | Uniform Force | Global Z | -0.4460 | | 0.0000 | 1.0000 |
| 3 | Uniform Force | Global Z | -0.4460 | | 0.0000 | 1.0000 |
| 4 | Uniform Force | Global Z | -0.4460 | | 0.0000 | 1.0000 |
| 5 | Uniform Force | Global Z | -0.4460 | | 0.0000 | 1.0000 |
| 6 | Uniform Force | Global Z | -0.4460 | | 0.0000 | 1.0000 |
| 7 | Uniform Force | Global Z | -0.4460 | | 0.0000 | 1.0000 |
| 8 | Uniform Force | Global Z | -0.4460 | | 0.0000 | 1.0000 |
| 9 | Uniform Force | Global Z | -0.4460 | | 0.0000 | 1.0000 |

## LOAD CASE LS Pressure - Wings, Member Loads

| Member | Type | Direction | Magnitude at Start (kips or kips-in) | Magnitude at End (kips or kips-in) | Start Position (x/L) | End Position from start (x/L) |
|---|---|---|---|---|---|---|
| 1 | Uniform Force | Local y | -0.1200 | | 0.0000 | 0.8000 |
| 10 | Uniform Force | Local y | -0.1240 | | 0.1900 | 1.0000 |

## LOAD CASE EH Pressure - Wings, Member Loads

| Member | Type | Direction | Magnitude at Start (kips or kips-in) | Magnitude at End (kips or kips-in) | Start Position (x/L) | End Position from start (x/L) |
|---|---|---|---|---|---|---|
| 1 | Uniform Force | Local y | -0.3500 | | 0.0000 | 0.8000 |
| 1 | Uniform Moment | Local x | -8.1700 | | 0.0000 | 0.8000 |
| 10 | Uniform Force | Local y | -0.3750 | | 0.1900 | 1.0000 |
| 10 | Uniform Moment | Local x | -9.0700 | | 0.1900 | 1.0000 |

## LOAD CASE LS Pressure - Abut, Member Loads

| Member | Type | Direction | Magnitude at Start (kips or kips-in) | Magnitude at End (kips or kips-in) | Start Position (x/L) | End Position from start (x/L) |
|---|---|---|---|---|---|---|
| 2 | Trapezoidal Force | Local y | -1.0200 | -1.0200 | 0.2500 | 1.0000 |
| 3 | Trapezoidal Force | Local y | -1.0200 | -1.0200 | 0.0000 | 1.0000 |
| 4 | Trapezoidal Force | Local y | -1.0200 | -1.0300 | 0.0000 | 1.0000 |
| 5 | Trapezoidal Force | Local y | -1.0300 | -1.0400 | 0.0000 | 1.0000 |
| 6 | Trapezoidal Force | Local y | -1.0400 | -1.0400 | 0.0000 | 1.0000 |
| 7 | Trapezoidal Force | Local y | -1.0400 | -1.0500 | 0.0000 | 1.0000 |
| 8 | Trapezoidal Force | Local y | -1.0500 | -1.0600 | 0.0000 | 1.0000 |
| 9 | Trapezoidal Force | Local y | -1.0600 | -1.0600 | 0.0000 | 0.8600 |

## LOAD CASE EH Pressure - Abut, Member Loads

| Member | Type | Direction | Magnitude at Start (kips or kips-in) | Magnitude at End (kips or kips-in) | Start Position (x/L) | End Position from start (x/L) |
|---|---|---|---|---|---|---|
| 2 | Trapezoidal Force | Local y | -2.6300 | -2.6300 | 0.2500 | 1.0000 |
| 3 | Trapezoidal Force | Local y | -2.6300 | -2.6300 | 0.0000 | 1.0000 |
| 4 | Trapezoidal Force | Local y | -2.6300 | -2.6600 | 0.0000 | 1.0000 |
| 5 | Trapezoidal Force | Local y | -2.6600 | -2.7100 | 0.0000 | 1.0000 |
| 6 | Trapezoidal Force | Local y | -2.7100 | -2.7600 | 0.0000 | 1.0000 |
| 7 | Trapezoidal Force | Local y | -2.7600 | -2.8100 | 0.0000 | 1.0000 |
| 8 | Trapezoidal Force | Local y | -2.8100 | -2.8400 | 0.0000 | 1.0000 |
| 9 | Trapezoidal Force | Local y | -2.8400 | -2.8400 | 0.0000 | 0.8600 |
| 2 | Trapezoidal Moment | Local x | -27.6800 | -27.6800 | 0.2500 | 1.0000 |
| 3 | Trapezoidal Moment | Local x | -27.6800 | -27.6800 | 0.0000 | 1.0000 |
| 4 | Trapezoidal Moment | Local x | -27.6800 | -28.1500 | 0.0000 | 1.0000 |
| 5 | Trapezoidal Moment | Local x | -28.1500 | -29.1200 | 0.0000 | 1.0000 |
| 6 | Trapezoidal Moment | Local x | -29.1200 | -30.2200 | 0.0000 | 1.0000 |
| 7 | Trapezoidal Moment | Local x | -30.2200 | -31.2300 | 0.0000 | 1.0000 |
| 8 | Trapezoidal Moment | Local x | -31.2300 | -31.7500 | 0.0000 | 1.0000 |
| 9 | Trapezoidal Moment | Local x | -31.7500 | -31.7500 | 0.0000 | 0.8600 |

## Stage Summary

**Stage 1 'Set Precast In Place' Day = 42 Temp = 72°F Rel Hum = 80 %**

**Step 1 : Add Supports**

**No Construction activity**

**Support Activity**

| | | | | | | |
|---|---|---|---|---|---|---|
| 1 | Free | Free | Free | Free | Free | Free |
| 2 | Free | Free | Free | Free | Free | Free |
| 3 | Free | Fixed | Fixed | Fixed | Free | Free |
| 4 | Free | Fixed | Fixed | Fixed | Free | Free |
| 5 | Free | Fixed | Free | Free | Free | Free |
| 6 | Fixed | Fixed | Fixed | Fixed | Free | Free |
| 7 | Free | Fixed | Free | Free | Free | Free |
| 8 | Free | Fixed | Fixed | Fixed | Free | Free |
| 9 | Free | Fixed | Fixed | Fixed | Free | Free |
| 10 | Free | Free | Free | Free | Free | Free |
| 11 | Free | Free | Free | Free | Free | Free |

**NO Slave/Master Activity.**

**NO Tendon Activity.**

**NO Displacement Initialization Activity.**

**NO Load Activity.**

**Step 2 : Add Precast and Grout Piles**

**Construct Structure Groups**

Wing1

Wing2

AbutA

AbutB

AbutC

**NO Support Activity.**

**NO Slave/Master Activity.**

**NO Tendon Activity.**

**NO Displacement Initialization Activity.**

**Load Activity**

1 Self Weight 1

**Stage 2 'Tension PT' Day = 45 Temp = 72°F Rel Hum = 80 %**

**Step 1 : Stress All Tendons**

**No Construction activity**

**NO Support Activity.**

**NO Slave/Master Activity.**

**Tendon Activity**

New Tendon 1 Stress

New Tendon 2 Stress

New Tendon 3 Stress

New Tendon 4 Stress

New Tendon 5 Stress

New Tendon 6 Stress

New Tendon 7 Stress

New Tendon 8 Stress

**NO Displacement Initialization Activity.**

**NO Load Activity.**

**Stage 3 'Add Superstructure' Day = 46 Temp = 72°F Rel Hum = 80 %**

**Step 1 : DC Loads Only**

**No Construction activity**

**NO Support Activity.**

**NO Slave/Master Activity.**

**NO Tendon Activity.**

**NO Displacement Initialization Activity.**

**Load Activity**

2 Superstructure DC 1

**Stage 4 'Backfill to Grade' Day = 52 Temp = 72°F Rel Hum = 80 %**

**Step 1 : Earth Pressure**

**No Construction activity**

**NO Support Activity.**

**NO Slave/Master Activity.**

**NO Tendon Activity.**

**NO Displacement Initialization Activity.**

**Load Activity**

8 EH Pressure - Abut 1

6 EH Pressure - Wings 1

**Step 2 : Live Load Surcharge**

**No Construction activity**

**NO Support Activity.**

**NO Slave/Master Activity.**

**NO Tendon Activity.**

**NO Displacement Initialization Activity.**

**Load Activity**

5 LS Pressure - Wings 0.8

7 LS Pressure - Abut 0.8

**Stage 5 'Pave' Day = 53 Temp = 72°F Rel Hum = 80 %**

**Step 1 : step 1**

**No Construction activity**

**NO Support Activity.**

**NO Slave/Master Activity.**

**NO Tendon Activity.**

**NO Displacement Initialization Activity.**

**Load Activity**

3 Superstructure DW 1

**Stage 6 'Open Bridge to Traffic' Day = 54 Temp = 72°F Rel Hum = 80 %**

**Step 1 : Service I Conditions at Bridge Opening**

**No Construction activity**

**NO Support Activity.**

**NO Slave/Master Activity.**

**NO Tendon Activity.**

**NO Displacement Initialization Activity.**

**Load Activity**

4 Superstructure LL+IM 1

5 LS Pressure - Wings 1

7 LS Pressure - Abut 1

**Step 2 : Service III Conditions at Bridge Opening**

**No Construction activity**

**NO Support Activity.**

**NO Slave/Master Activity.**

**NO Tendon Activity.**

**NO Displacement Initialization Activity.**

**Load Activity**

5 LS Pressure - Wings 0.8

7 LS Pressure - Abut 0.8

4 Superstructure LL+IM 0.8

**Stage 7 'Partial Live Load for Long Duration' Day = 55 Temp = 72°F Rel Hum = 80 %**

**Step 1 : step 1**

**No Construction activity**

**NO Support Activity.**

**NO Slave/Master Activity.**

**NO Tendon Activity.**

**NO Displacement Initialization Activity.**

**Load Activity**

5 LS Pressure - Wings 0.1

7 LS Pressure - Abut 0.1

4 Superstructure LL+IM 0.1

**Stage 8 'Remove Long Term Live Load' Day = 27374 Temp = 72°F Rel Hum = 80 %**

**Step 1 : step 1**

**No Construction activity**

**NO Support Activity.**

**NO Slave/Master Activity.**

**NO Tendon Activity.**

**NO Displacement Initialization Activity.**

**Load Activity**

5 LS Pressure - Wings -0.1

7 LS Pressure - Abut -0.1

4 Superstructure LL+IM -0.1

**Stage 9 'Long Term Performance' Day = 36500 Temp = 72°F Rel Hum = 80 %**

**Step 1 : Service III Conditions at Bridge End of Life**

**No Construction activity**

**NO Support Activity.**

**NO Slave/Master Activity.**

**NO Tendon Activity.**

**NO Displacement Initialization Activity.**

**Load Activity**

5 LS Pressure - Wings 0.8

7 LS Pressure - Abut 0.8

4 Superstructure LL+IM 0.8

**Step 2 : Service I Conditions at Bridge End of Life**

**No Construction activity**

**NO Support Activity.**

**NO Slave/Master Activity.**

**NO Tendon Activity.**

**NO Displacement Initialization Activity.**

**Load Activity**

5 LS Pressure - Wings 1

7 LS Pressure - Abut 1

4 Superstructure LL+IM 1

**Step 3 : Strength I Conditions at Bridge End of Life**

**No Construction activity**

**NO Support Activity.**

**NO Slave/Master Activity.**

**NO Tendon Activity.**

**NO Displacement Initialization Activity.**

**Load Activity**

| | | |
|---|---|---|
| 5 | LS Pressure - Wings | 1.75 |
| 7 | LS Pressure - Abut | 1 |
| 4 | Superstructure LL+IM | 1.75 |
| 1 | Self Weight | 0.25 |
| 2 | Superstructure DC | 0.25 |
| 3 | Superstructure DW | 0.5 |
| 6 | EH Pressure - Wings | 0.35 |

## Result Cases Summary

**Set Precast In Place: Set Precast In Place: Add Supports**
Solved: 3/3/2014

Load Class: Accumulated Locked-in Force Effects Resulting from the Construction Process

**Set Precast In Place: Set Precast In Place: Add Precast and**
Solved: 3/3/2014

Load Class: None

**Tension PT: Tension PT: Creep**
Solved: 3/3/2014

Load Class: Creep

**Tension PT: Tension PT: Shrinkage**
Solved: 3/3/2014

Load Class: Shrinkage

**Tension PT: Tension PT: PT Relaxation**
Solved: 3/3/2014

Load Class: Prestress Loss(Relaxation)

**Tension PT: Tension PT: Other PT Losses**
Solved: 3/3/2014

Load Class: Prestress Loss(Shrinkage, Elastic Shortening, Creep)

**Tension PT: Tension PT: Stress All Tendo**
Solved: 3/3/2014

Load Class: Prestress Load

**Add Superstructure: Add Superstructure: Creep**
Solved: 3/3/2014

Load Class: Creep

**Add Superstructure: Add Superstructure: Shrinkage**
Solved: 3/3/2014

Load Class: Shrinkage

**Add Superstructure: Add Superstructure: PT Relaxation**
Solved: 3/3/2014

Load Class: Prestress Loss(Relaxation)

**Add Superstructure: Add Superstructure: Other PT Losses**
Solved: 3/3/2014

Load Class: Prestress Loss(Shrinkage, Elastic Shortening, Creep)

**Add Superstructure: Add Superstructure: DC Loads Only**

Solved: 3/3/2014

Load Class: Dead Load

**Backfill to Grade: Backfill to Grade: Creep**
Solved: 3/3/2014

Load Class: Creep

**Backfill to Grade: Backfill to Grade: Shrinkage**
Solved: 3/3/2014

Load Class: Shrinkage

**Backfill to Grade: Backfill to Grade: PT Relaxation**
Solved: 3/3/2014

Load Class: Prestress Loss(Relaxation)

**Backfill to Grade: Backfill to Grade: Other PT Losses**
Solved: 3/3/2014

Load Class: Prestress Loss(Shrinkage, Elastic Shortening, Creep)

**Backfill to Grade: Backfill to Grade: Earth Pressure**
Solved: 3/3/2014

Load Class: Earth Pressure

**Backfill to Grade: Backfill to Grade: Live Load Surcha**
Solved: 3/3/2014

Load Class: Live Load Surcharge

**Pave: Pave: Creep**
Solved: 3/3/2014

Load Class: Creep

**Pave: Pave: Shrinkage**
Solved: 3/3/2014

Load Class: Shrinkage

**Pave: Pave: PT Relaxation**
Solved: 3/3/2014

Load Class: Prestress Loss(Relaxation)

**Pave: Pave: Other PT Losses**
Solved: 3/3/2014

Load Class: Prestress Loss(Shrinkage, Elastic Shortening, Creep)

**Pave: Pave: step 1**
Solved: 3/3/2014

Load Class: Dead Load

**Open Bridge to Traffic: Open Bridge to Traffic: Creep**

Solved: 3/3/2014

Load Class: Creep

**Open Bridge to Traffic: Open Bridge to Traffic: Shrinkage**
Solved: 3/3/2014

Load Class: Shrinkage

**Open Bridge to Traffic: Open Bridge to Traffic: PT Relaxation**
Solved: 3/3/2014

Load Class: Prestress Loss(Relaxation)

**Open Bridge to Traffic: Open Bridge to Traffic: Other PT Losses**
Solved: 3/3/2014

Load Class: Prestress Loss(Shrinkage, Elastic Shortening, Creep)

**Open Bridge to Traffic: Open Bridge to Traffic: Service I Condit**
Solved: 3/3/2014

Load Class: Dead Load

**Open Bridge to Traffic: Open Bridge to Traffic: Service III Cond**
Solved: 3/3/2014

Load Class: Live Load Surcharge

**Partial Live Load for Long Duration: Partial Live Load for Long Duration: Creep**
Solved: 3/3/2014

Load Class: Creep

**Partial Live Load for Long Duration: Partial Live Load for Long Duration: Shrinkage**
Solved: 3/3/2014

Load Class: Shrinkage

**Partial Live Load for Long Duration: Partial Live Load for Long Duration: PT Relaxation**
Solved: 3/3/2014

Load Class: Prestress Loss(Relaxation)

**Partial Live Load for Long Duration: Partial Live Load for Long Duration: Other PT Losses**
Solved: 3/3/2014

Load Class: Prestress Loss(Shrinkage, Elastic Shortening, Creep)

**Partial Live Load for Long Duration: Partial Live Load for Long Duration: step 1**
Solved: 3/3/2014

Load Class: Live Load Surcharge

**Remove Long Term Live Load: Remove Long Term Live Load: Creep**
Solved: 3/3/2014

Load Class: Creep

**Remove Long Term Live Load: Remove Long Term Live Load: Shrinkage**

Solved: 3/3/2014

Load Class: Shrinkage

**Remove Long Term Live Load: Remove Long Term Live Load: PT Relaxation**
Solved: 3/3/2014

Load Class: Prestress Loss(Relaxation)

**Remove Long Term Live Load: Remove Long Term Live Load: Other PT Losses**
Solved: 3/3/2014

Load Class: Prestress Loss(Shrinkage, Elastic Shortening, Creep)

**Remove Long Term Live Load: Remove Long Term Live Load: step 1**
Solved: 3/3/2014

Load Class: Live Load Surcharge

**Long Term Performance: Long Term Performance: Creep**
Solved: 3/3/2014

Load Class: Creep

**Long Term Performance: Long Term Performance: Shrinkage**
Solved: 3/3/2014

Load Class: Shrinkage

**Long Term Performance: Long Term Performance: PT Relaxation**
Solved: 3/3/2014

Load Class: Prestress Loss(Relaxation)

**Long Term Performance: Long Term Performance: Other PT Losses**
Solved: 3/3/2014

Load Class: Prestress Loss(Shrinkage, Elastic Shortening, Creep)

**Long Term Performance: Long Term Performance: Service III Cond**
Solved: 3/3/2014

Load Class: Live Load Surcharge

**Long Term Performance: Long Term Performance: Service I Condit**
Solved: 3/3/2014

Load Class: Live Load Surcharge

**Long Term Performance: Long Term Performance: Strength I Condi**
Solved: 3/3/2014

Load Class: Live Load Surcharge

**Strength Check: Strength Check: Creep**
Solved: 3/3/2014

Load Class: Creep

**Strength Check: Strength Check: Shrinkage**

Solved: 3/3/2014

Load Class: Shrinkage

**Strength Check: Strength Check: PT Relaxation**
Solved: 3/3/2014

Load Class: Prestress Loss(Relaxation)

**Strength Check: Strength Check: Other PT Losses**
Solved: 3/3/2014

Load Class: Prestress Loss(Shrinkage, Elastic Shortening, Creep)

**Strength Check: Strength Check: Detension to Rem**
Solved: 3/3/2014

Load Class: Prestress Load

**Strength Check: Strength Check: Strength I Condi**
Solved: 3/3/2014

Load Class: Live Load Surcharge

## RESULT : Member Sectional Forces

| Member | Station | Result Case | Force X (kips) | Force Y (kips) | Force Z (kips) | Moment X (kips-ft) | Moment Y (kips-ft) | Moment Z (kips-ft) |
|---|---|---|---|---|---|---|---|---|
| 1 | 0 | Set Precast In Place: Set | 0.0000 | 0.0000 | 0.0000 | 0.0000 | 0.0000 | 0.0000 |
| 1 | 0 | Set Precast In Place: Set | 0.0000 | 0.0000 | 0.0000 | 0.0000 | 0.0000 | 0.0000 |
| 1 | 0 | Tension PT: Tension PT: | 0.0000 | 0.0000 | 0.0000 | 0.0000 | 0.0000 | 0.0000 |
| 1 | 0 | Tension PT: Tension PT: | 0.0000 | 0.0000 | 0.0000 | 0.0000 | 0.0000 | 0.0000 |
| 1 | 0 | Tension PT: Tension PT: | 0.0000 | 0.0000 | 0.0000 | 0.0000 | 0.0000 | 0.0000 |
| 1 | 0 | Tension PT: Tension PT: | 0.0000 | 0.0000 | 0.0000 | 0.0000 | 0.0000 | 0.0000 |
| 1 | 0 | Tension PT: Tension PT: | 0.0000 | 0.0000 | 0.0000 | 0.0000 | 0.0000 | 0.0000 |
| 1 | 0 | Add Superstructure: Add | 0.0000 | 0.0000 | 0.0000 | 0.0000 | 0.0000 | 0.0000 |
| 1 | 0 | Add Superstructure: Add | 0.0000 | 0.0000 | 0.0000 | 0.0000 | 0.0000 | 0.0000 |
| 1 | 0 | Add Superstructure: Add | 0.0000 | 0.0000 | 0.0000 | 0.0000 | 0.0000 | 0.0000 |
| 1 | 0 | Add Superstructure: Add | 0.0000 | 0.0000 | 0.0000 | 0.0000 | 0.0000 | 0.0000 |
| 1 | 0 | Add Superstructure: Add | 0.0000 | 0.0000 | 0.0000 | 0.0000 | 0.0000 | 0.0000 |
| 1 | 0 | Backfill to Grade: Backfill | 0.0000 | 0.0000 | 0.0000 | 0.0000 | 0.0000 | 0.0000 |
| 1 | 0 | Backfill to Grade: Backfill | 0.0000 | 0.0000 | 0.0000 | 0.0000 | 0.0000 | 0.0000 |
| 1 | 0 | Backfill to Grade: Backfill | 0.0000 | 0.0000 | 0.0000 | 0.0000 | 0.0000 | 0.0000 |
| 1 | 0 | Backfill to Grade: Backfill | 0.0000 | 0.0000 | 0.0000 | 0.0000 | 0.0000 | 0.0000 |
| 1 | 0 | Backfill to Grade: Backfill | 0.0000 | 0.0000 | 0.0000 | 0.0000 | 0.0000 | 0.0000 |
| 1 | 0 | Backfill to Grade: Backfill | 0.0000 | 0.0000 | 0.0000 | 0.0000 | 0.0000 | 0.0000 |
| 1 | 0 | Pave: Pave: Creep | 0.0000 | 0.0000 | 0.0000 | 0.0000 | 0.0000 | 0.0000 |

## RESULT : Member Sectional Forces

| Member | Station | | Result Case | Force X (kips) | | Force Y (kips) | | Force Z (kips) | Moment X (kips-ft) | Moment Y (kips-ft) | Moment Z (kips-ft) |
|---|---|---|---|---|---|---|---|---|---|---|---|
| 1 | 0 | Pave: Pave: Shrinkage | 0.0000 | 0.0000 | 0.0000 | 0.0000 | 0.0000 | 0.0000 | | | |
| 1 | 0 | Pave: Pave: PT | 0.0000 | 0.0000 | 0.0000 | 0.0000 | 0.0000 | 0.0000 | | | |
| 1 | 0 | Pave: Pave: Other PT | 0.0000 | 0.0000 | 0.0000 | 0.0000 | 0.0000 | 0.0000 | | | |
| 1 | 0 | Pave: Pave: step 1 | 0.0000 | 0.0000 | 0.0000 | 0.0000 | 0.0000 | 0.0000 | | | |
| 1 | 0 | Open Bridge to Traffic: | 0.0000 | 0.0000 | 0.0000 | 0.0000 | 0.0000 | 0.0000 | | | |
| 1 | 0 | Open Bridge to Traffic: | 0.0000 | 0.0000 | 0.0000 | 0.0000 | 0.0000 | 0.0000 | | | |
| 1 | 0 | Open Bridge to Traffic: | 0.0000 | 0.0000 | 0.0000 | 0.0000 | 0.0000 | 0.0000 | | | |
| 1 | 0 | Open Bridge to Traffic: | 0.0000 | 0.0000 | 0.0000 | 0.0000 | 0.0000 | 0.0000 | | | |
| 1 | 0 | Open Bridge to Traffic: | 0.0000 | 0.0000 | 0.0000 | 0.0000 | 0.0000 | 0.0000 | | | |
| 1 | 0 | Open Bridge to Traffic: | 0.0000 | 0.0000 | 0.0000 | 0.0000 | 0.0000 | 0.0000 | | | |
| 1 | 0 | Partial Live Load for | 0.0000 | 0.0000 | 0.0000 | 0.0000 | 0.0000 | 0.0000 | | | |
| 1 | 0 | Partial Live Load for | 0.0000 | 0.0000 | 0.0000 | 0.0000 | 0.0000 | 0.0000 | | | |
| 1 | 0 | Partial Live Load for | 0.0000 | 0.0000 | 0.0000 | 0.0000 | 0.0000 | 0.0000 | | | |
| 1 | 0 | Partial Live Load for | 0.0000 | 0.0000 | 0.0000 | 0.0000 | 0.0000 | 0.0000 | | | |
| 1 | 0 | Partial Live Load for | 0.0000 | 0.0000 | 0.0000 | 0.0000 | 0.0000 | 0.0000 | | | |
| 1 | 0 | Remove Long Term Live | 0.0000 | 0.0000 | 0.0000 | 0.0000 | 0.0000 | 0.0000 | | | |
| 1 | 0 | Remove Long Term Live | 0.0000 | 0.0000 | 0.0000 | 0.0000 | 0.0000 | 0.0000 | | | |
| 1 | 0 | Remove Long Term Live | 0.0000 | 0.0000 | 0.0000 | 0.0000 | 0.0000 | 0.0000 | | | |
| 1 | 0 | Remove Long Term Live | 0.0000 | 0.0000 | 0.0000 | 0.0000 | 0.0000 | 0.0000 | | | |
| 1 | 0 | Remove Long Term Live | 0.0000 | 0.0000 | 0.0000 | 0.0000 | 0.0000 | 0.0000 | | | |
| 1 | 0 | Long Term Performance: | 0.0000 | 0.0000 | 0.0000 | 0.0000 | 0.0000 | 0.0000 | | | |
| 1 | 0 | Long Term Performance: | 0.0000 | 0.0000 | 0.0000 | 0.0000 | 0.0000 | 0.0000 | | | |
| 1 | 0 | Long Term Performance: | 0.0000 | 0.0000 | 0.0000 | 0.0000 | 0.0000 | 0.0000 | | | |
| 1 | 0 | Long Term Performance: | 0.0000 | 0.0000 | 0.0000 | 0.0000 | 0.0000 | 0.0000 | | | |
| 1 | 0 | Long Term Performance: | 0.0000 | 0.0000 | 0.0000 | 0.0000 | 0.0000 | 0.0000 | | | |
| 1 | 0 | Long Term Performance: | 0.0000 | 0.0000 | 0.0000 | 0.0000 | 0.0000 | 0.0000 | | | |
| 1 | 0 | Long Term Performance: | 0.0000 | 0.0000 | 0.0000 | 0.0000 | 0.0000 | 0.0000 | | | |
| 1 | 0 | Strength Check: Strength | 0.0000 | 0.0000 | 0.0000 | 0.0000 | 0.0000 | 0.0000 | | | |
| 1 | 0 | Strength Check: Strength | 0.0000 | 0.0000 | 0.0000 | 0.0000 | 0.0000 | 0.0000 | | | |
| 1 | 0 | Strength Check: Strength | 0.0000 | 0.0000 | 0.0000 | 0.0000 | 0.0000 | 0.0000 | | | |
| 1 | 0 | Strength Check: Strength | 0.0000 | 0.0000 | 0.0000 | 0.0000 | 0.0000 | 0.0000 | | | |
| 1 | 0 | Strength Check: Strength | 0.0000 | 0.0000 | 0.0000 | 0.0000 | 0.0000 | 0.0000 | | | |
| 1 | 0 | Strength Check: Strength | 0.0000 | 0.0000 | 0.0000 | 0.0000 | 0.0000 | 0.0000 | | | |
| 1 | 1 | Set Precast In Place: Set | 0.0000 | 0.0000 | 0.0000 | 0.0000 | 0.0000 | 0.0000 | | | |

## RESULT : Member Sectional Forces

| Member | Station | Result Case | Force X (kips) | Force Y (kips) | Force Z (kips) | Moment X (kips-ft) | Moment Y (kips-ft) | Moment Z (kips-ft) |
|---|---|---|---|---|---|---|---|---|
| 1 | 1 | Set Precast In Place: Set | 0.0000 | 0.0000 | -11.9320 | 0.0000 | -27.1170 | 0.0000 |
| 1 | 1 | Tension PT: Tension PT: | 0.0000 | 0.0000 | -11.9320 | 0.0000 | -27.1170 | 0.0000 |
| 1 | 1 | Tension PT: Tension PT: | 0.0000 | 0.0000 | -11.9320 | 0.0000 | -27.1170 | 0.0000 |
| 1 | 1 | Tension PT: Tension PT: | 0.0000 | 0.0000 | -11.9320 | 0.0000 | -27.1170 | 0.0000 |
| 1 | 1 | Tension PT: Tension PT: | 0.0000 | 0.0000 | -11.9320 | 0.0000 | -27.1170 | 0.0000 |
| 1 | 1 | Tension PT: Tension PT: | 0.0000 | 0.0000 | -11.9320 | 0.0000 | -27.1170 | 0.0000 |
| 1 | 1 | Add Superstructure: Add | 0.0000 | 0.0000 | -11.9320 | 0.0000 | -27.1170 | 0.0000 |
| 1 | 1 | Add Superstructure: Add | 0.0000 | 0.0000 | -11.9320 | 0.0000 | -27.1170 | 0.0000 |
| 1 | 1 | Add Superstructure: Add | 0.0000 | 0.0000 | -11.9320 | 0.0000 | -27.1170 | 0.0000 |
| 1 | 1 | Add Superstructure: Add | 0.0000 | 0.0000 | -11.9320 | 0.0000 | -27.1170 | 0.0000 |
| 1 | 1 | Add Superstructure: Add | 0.0000 | 0.0000 | -11.9320 | 0.0000 | -27.1170 | 0.0000 |
| 1 | 1 | Backfill to Grade: Backfill | 0.0000 | 0.0000 | -11.9320 | 0.0000 | -27.1170 | 0.0000 |
| 1 | 1 | Backfill to Grade: Backfill | 0.0000 | 0.0000 | -11.9320 | 0.0000 | -27.1170 | 0.0000 |
| 1 | 1 | Backfill to Grade: Backfill | 0.0000 | 0.0000 | -11.9320 | 0.0000 | -27.1170 | 0.0000 |
| 1 | 1 | Backfill to Grade: Backfill | 0.0000 | 0.0000 | -11.9320 | 0.0000 | -27.1170 | 0.0000 |
| 1 | 1 | Backfill to Grade: Backfill | 0.0000 | -19.0902 | -11.9320 | 37.1349 | -27.1170 | -43.3850 |
| 1 | 1 | Backfill to Grade: Backfill | 0.0000 | -24.3263 | -11.9320 | 37.1349 | -27.1170 | -55.2849 |
| 1 | 1 | Pave: Pave: Creep | 0.0000 | -19.0902 | -11.9320 | 37.1349 | -27.1170 | -43.3850 |
| 1 | 1 | Pave: Pave: Shrinkage | 0.0000 | -19.0902 | -11.9320 | 37.1349 | -27.1170 | -43.3850 |
| 1 | 1 | Pave: Pave: PT | 0.0000 | -19.0902 | -11.9320 | 37.1349 | -27.1170 | -43.3850 |
| 1 | 1 | Pave: Pave: Other PT | 0.0000 | -19.0902 | -11.9320 | 37.1349 | -27.1170 | -43.3850 |
| 1 | 1 | Pave: Pave: step 1 | 0.0000 | -19.0902 | -11.9320 | 37.1349 | -27.1170 | -43.3850 |
| 1 | 1 | Open Bridge to Traffic: | 0.0000 | -19.0902 | -11.9320 | 37.1349 | -27.1170 | -43.3850 |
| 1 | 1 | Open Bridge to Traffic: | 0.0000 | -19.0902 | -11.9320 | 37.1349 | -27.1170 | -43.3850 |
| 1 | 1 | Open Bridge to Traffic: | 0.0000 | -19.0902 | -11.9320 | 37.1349 | -27.1170 | -43.3850 |
| 1 | 1 | Open Bridge to Traffic: | 0.0000 | -19.0902 | -11.9320 | 37.1349 | -27.1170 | -43.3850 |
| 1 | 1 | Open Bridge to Traffic: | 0.0000 | -25.6354 | -11.9320 | 37.1349 | -27.1170 | -58.2599 |
| 1 | 1 | Open Bridge to Traffic: | 0.0000 | -24.3263 | -11.9320 | 37.1349 | -27.1170 | -55.2849 |
| 1 | 1 | Partial Live Load for | 0.0000 | -19.0902 | -11.9320 | 37.1349 | -27.1170 | -43.3850 |
| 1 | 1 | Partial Live Load for | 0.0000 | -19.0902 | -11.9320 | 37.1349 | -27.1170 | -43.3850 |
| 1 | 1 | Partial Live Load for | 0.0000 | -19.0902 | -11.9320 | 37.1349 | -27.1170 | -43.3850 |
| 1 | 1 | Partial Live Load for | 0.0000 | -19.0902 | -11.9320 | 37.1349 | -27.1170 | -43.3850 |
| 1 | 1 | Partial Live Load for | 0.0000 | -19.7447 | -11.9320 | 37.1349 | -27.1170 | -44.8725 |
| 1 | 1 | Remove Long Term Live | 0.0000 | -19.7447 | -11.9320 | 37.1349 | -27.1170 | -44.8725 |

## RESULT : Member Sectional Forces

| Member | Station | Result Case | Force X (kips) | Force Y (kips) | Force Z (kips) | Moment X (kips-ft) | Moment Y (kips-ft) | Moment Z (kips-ft) |
|---|---|---|---|---|---|---|---|---|
| 1 | 1 | Remove Long Term Live | 0.0000 | -19.7447 | -11.9320 | 37.1349 | -27.1170 | -44.8725 |
| 1 | 1 | Remove Long Term Live | 0.0000 | -19.7447 | -11.9320 | 37.1349 | -27.1170 | -44.8725 |
| 1 | 1 | Remove Long Term Live | 0.0000 | -19.7447 | -11.9320 | 37.1349 | -27.1170 | -44.8725 |
| 1 | 1 | Remove Long Term Live | 0.0000 | -19.0902 | -11.9320 | 37.1349 | -27.1170 | -43.3850 |
| 1 | 1 | Long Term Performance: | 0.0000 | -19.0902 | -11.9320 | 37.1349 | -27.1170 | -43.3850 |
| 1 | 1 | Long Term Performance: | 0.0000 | -19.0902 | -11.9320 | 37.1349 | -27.1170 | -43.3850 |
| 1 | 1 | Long Term Performance: | 0.0000 | -19.0902 | -11.9320 | 37.1349 | -27.1170 | -43.3850 |
| 1 | 1 | Long Term Performance: | 0.0000 | -19.0902 | -11.9320 | 37.1349 | -27.1170 | -43.3850 |
| 1 | 1 | Long Term Performance: | 0.0000 | -24.3263 | -11.9320 | 37.1349 | -27.1170 | -55.2849 |
| 1 | 1 | Long Term Performance: | 0.0000 | -25.6354 | -11.9320 | 37.1349 | -27.1170 | -58.2599 |
| 1 | 1 | Long Term Performance: | 0.0000 | -37.2258 | -14.9150 | 50.1321 | -33.8963 | -84.6008 |
| 1 | 1 | Strength Check: Strength | 0.0000 | -19.0902 | -11.9320 | 37.1349 | -27.1170 | -43.3850 |
| 1 | 1 | Strength Check: Strength | 0.0000 | -19.0902 | -11.9320 | 37.1349 | -27.1170 | -43.3850 |
| 1 | 1 | Strength Check: Strength | 0.0000 | -19.0902 | -11.9320 | 37.1349 | -27.1170 | -43.3850 |
| 1 | 1 | Strength Check: Strength | 0.0000 | -19.0902 | -11.9320 | 37.1349 | -27.1170 | -43.3850 |
| 1 | 1 | Strength Check: Strength | 0.0000 | -19.0902 | -11.9320 | 37.1349 | -27.1170 | -43.3850 |
| 1 | 1 | Strength Check: Strength | 0.0000 | -37.2258 | -14.9150 | 50.1321 | -33.8963 | -84.6008 |
| 1 | 2 | Set Precast In Place: Set | 0.0000 | 0.0000 | 0.0000 | 0.0000 | 0.0000 | 0.0000 |
| 1 | 2 | Set Precast In Place: Set | 0.0000 | 0.0000 | -23.8639 | 0.0000 | -108.4682 | 0.0000 |
| 1 | 2 | Tension PT: Tension PT: | 0.0000 | 0.0000 | -23.8639 | 0.0000 | -108.4682 | 0.0000 |
| 1 | 2 | Tension PT: Tension PT: | 0.0000 | 0.0000 | -23.8639 | 0.0000 | -108.4682 | 0.0000 |
| 1 | 2 | Tension PT: Tension PT: | 0.0000 | 0.0000 | -23.8639 | 0.0000 | -108.4682 | 0.0000 |
| 1 | 2 | Tension PT: Tension PT: | 0.0000 | 0.0000 | -23.8639 | 0.0000 | -108.4682 | 0.0000 |
| 1 | 2 | Tension PT: Tension PT: | 103.9598 | 285.5907 | -23.8639 | -499.7790 | 73.4597 | 190.8115 |
| 1 | 2 | Add Superstructure: Add | 103.9598 | 285.5907 | -23.8639 | -499.7790 | 73.4597 | 190.8115 |
| 1 | 2 | Add Superstructure: Add | 103.9598 | 285.5907 | -23.8639 | -499.7790 | 73.4597 | 190.8115 |
| 1 | 2 | Add Superstructure: Add | 103.9598 | 285.5907 | -23.8639 | -499.7790 | 73.4597 | 190.8115 |
| 1 | 2 | Add Superstructure: Add | 103.9274 | 285.5018 | -23.8639 | -499.6234 | 73.4030 | 190.7523 |
| 1 | 2 | Add Superstructure: Add | 103.9274 | 285.5018 | -23.8639 | -499.6234 | 73.4030 | 190.7523 |
| 1 | 2 | Backfill to Grade: Backfill | 103.9274 | 285.5018 | -23.8639 | -499.6234 | 73.4030 | 190.7523 |
| 1 | 2 | Backfill to Grade: Backfill | 103.9274 | 285.5018 | -23.8639 | -499.6234 | 73.4030 | 190.7523 |
| 1 | 2 | Backfill to Grade: Backfill | 103.9274 | 285.5018 | -23.8639 | -499.6234 | 73.4030 | 190.7523 |
| 1 | 2 | Backfill to Grade: Backfill | 103.8795 | 285.3702 | -23.8639 | -499.3931 | 73.3192 | 190.6649 |
| 1 | 2 | Backfill to Grade: Backfill | 103.8795 | 254.8260 | -23.8639 | -439.9773 | 73.3192 | 24.0663 |

## RESULT : Member Sectional Forces

| Member | Station | | Result Case | Force X (kips) | Force Y (kips) | Force Z (kips) | Moment X (kips-ft) | Moment Y (kips-ft) | Moment Z (kips-ft) |
|---|---|---|---|---|---|---|---|---|---|
| 1 | 2 | Backfill to Grade: Backfill | 103.8795 | 246.4481 | -23.8639 | -439.9773 | 73.3192 | -21.6293 | |
| 1 | 2 | Pave: Pave: Creep | 103.8795 | 254.8260 | -23.8639 | -439.9773 | 73.3192 | 24.0663 | |
| 1 | 2 | Pave: Pave: Shrinkage | 103.8795 | 254.8260 | -23.8639 | -439.9773 | 73.3192 | 24.0663 | |
| 1 | 2 | Pave: Pave: PT | 103.8795 | 254.8260 | -23.8639 | -439.9773 | 73.3192 | 24.0663 | |
| 1 | 2 | Pave: Pave: Other PT | 103.8896 | 254.8537 | -23.8639 | -440.0258 | 73.3369 | 24.0847 | |
| 1 | 2 | Pave: Pave: step 1 | 103.8896 | 254.8537 | -23.8639 | -440.0258 | 73.3369 | 24.0847 | |
| 1 | 2 | Open Bridge to Traffic: | 103.8896 | 254.8537 | -23.8639 | -440.0258 | 73.3369 | 24.0847 | |
| 1 | 2 | Open Bridge to Traffic: | 103.8896 | 254.8537 | -23.8639 | -440.0258 | 73.3369 | 24.0847 | |
| 1 | 2 | Open Bridge to Traffic: | 103.8896 | 254.8537 | -23.8639 | -440.0258 | 73.3369 | 24.0847 | |
| 1 | 2 | Open Bridge to Traffic: | 103.8842 | 254.8389 | -23.8639 | -439.9999 | 73.3274 | 24.0749 | |
| 1 | 2 | Open Bridge to Traffic: | 103.8842 | 244.3666 | -23.8639 | -439.9999 | 73.3274 | -33.0446 | |
| 1 | 2 | Open Bridge to Traffic: | 103.8842 | 246.4610 | -23.8639 | -439.9999 | 73.3274 | -21.6207 | |
| 1 | 2 | Partial Live Load for | 103.8842 | 254.8389 | -23.8639 | -439.9999 | 73.3274 | 24.0749 | |
| 1 | 2 | Partial Live Load for | 103.8842 | 254.8389 | -23.8639 | -439.9999 | 73.3274 | 24.0749 | |
| 1 | 2 | Partial Live Load for | 103.8842 | 254.8389 | -23.8639 | -439.9999 | 73.3274 | 24.0749 | |
| 1 | 2 | Partial Live Load for | 103.8788 | 254.8241 | -23.8639 | -439.9740 | 73.3180 | 24.0651 | |
| 1 | 2 | Partial Live Load for | 103.8788 | 253.7769 | -23.8639 | -439.9740 | 73.3180 | 18.3531 | |
| 1 | 2 | Remove Long Term Live | 103.8788 | 253.7769 | -23.8639 | -439.9740 | 73.3180 | 18.3531 | |
| 1 | 2 | Remove Long Term Live | 103.8788 | 253.7769 | -23.8639 | -439.9740 | 73.3180 | 18.3531 | |
| 1 | 2 | Remove Long Term Live | 103.8788 | 253.7769 | -23.8639 | -439.9740 | 73.3180 | 18.3531 | |
| 1 | 2 | Remove Long Term Live | 99.4164 | 241.5181 | -23.8639 | -418.5212 | 65.5088 | 10.1997 | |
| 1 | 2 | Remove Long Term Live | 99.4164 | 242.5654 | -23.8639 | -418.5212 | 65.5088 | 15.9117 | |
| 1 | 2 | Long Term Performance: | 99.4164 | 242.5654 | -23.8639 | -418.5212 | 65.5088 | 15.9117 | |
| 1 | 2 | Long Term Performance: | 99.4164 | 242.5654 | -23.8639 | -418.5212 | 65.5088 | 15.9117 | |
| 1 | 2 | Long Term Performance: | 99.4164 | 242.5654 | -23.8639 | -418.5212 | 65.5088 | 15.9117 | |
| 1 | 2 | Long Term Performance: | 99.2375 | 242.0738 | -23.8639 | -417.6611 | 65.1957 | 15.5848 | |
| 1 | 2 | Long Term Performance: | 99.2375 | 233.6960 | -23.8639 | -417.6611 | 65.1957 | -30.1108 | |
| 1 | 2 | Long Term Performance: | 99.2375 | 231.6015 | -23.8639 | -417.6611 | 65.1957 | -41.5347 | |
| 1 | 2 | Long Term Performance: | 99.2375 | 213.0568 | -29.8299 | -396.8655 | 38.0787 | -142.6839 | |
| 1 | 2 | Strength Check: Strength | 99.2375 | 242.0738 | -23.8639 | -417.6611 | 65.1957 | 15.5848 | |
| 1 | 2 | Strength Check: Strength | 99.2375 | 242.0738 | -23.8639 | -417.6611 | 65.1957 | 15.5848 | |
| 1 | 2 | Strength Check: Strength | 99.2375 | 242.0738 | -23.8639 | -417.6611 | 65.1957 | 15.5848 | |
| 1 | 2 | Strength Check: Strength | 99.2375 | 242.0738 | -23.8639 | -417.6609 | 65.1957 | 15.5847 | |
| 1 | 2 | Strength Check: Strength | 0.0000 | -30.5443 | -23.8639 | 59.4159 | -108.4682 | -166.5985 | |

## RESULT : Member Sectional Forces

| Member | Station | Result Case | Force X (kips) | Force Y (kips) | Force Z (kips) | Moment X (kips-ft) | Moment Y (kips-ft) | Moment Z (kips-ft) |
|---|---|---|---|---|---|---|---|---|
| 1 | 2 | Strength Check: Strength | 99.2375 | 213.0567 | -29.8299 | -396.8654 | 38.0787 | -142.6839 |
| 2 | 0 | Set Precast In Place: Set | 0.0000 | 0.0000 | 0.0000 | 0.0000 | 0.0000 | 0.0000 |
| 2 | 0 | Set Precast In Place: Set | 0.1689 | 0.0000 | -23.8633 | 101.9227 | 37.1024 | -0.7212 |
| 2 | 0 | Tension PT: Tension PT: | 0.1689 | 0.0000 | -23.8633 | 101.9227 | 37.1024 | -0.7212 |
| 2 | 0 | Tension PT: Tension PT: | 0.1689 | 0.0000 | -23.8633 | 101.9227 | 37.1024 | -0.7212 |
| 2 | 0 | Tension PT: Tension PT: | 0.1689 | 0.0000 | -23.8633 | 101.9227 | 37.1024 | -0.7212 |
| 2 | 0 | Tension PT: Tension PT: | 0.1689 | 0.0000 | -23.8633 | 101.9227 | 37.1024 | -0.7212 |
| 2 | 0 | Tension PT: Tension PT: | -303.7474 | 0.0001 | -26.0138 | 103.2728 | 47.2383 | 190.0856 |
| 2 | 0 | Add Superstructure: Add | -303.7474 | 0.0001 | -26.0138 | 103.2728 | 47.2383 | 190.0856 |
| 2 | 0 | Add Superstructure: Add | -303.7474 | 0.0001 | -26.0138 | 103.2728 | 47.2383 | 190.0856 |
| 2 | 0 | Add Superstructure: Add | -303.7474 | 0.0001 | -26.0138 | 103.2728 | 47.2383 | 190.0856 |
| 2 | 0 | Add Superstructure: Add | -303.6527 | 0.0001 | -26.0131 | 103.2724 | 47.2352 | 190.0264 |
| 2 | 0 | Add Superstructure: Add | -303.6527 | 0.0001 | -26.0131 | 103.2724 | 47.2352 | 190.0264 |
| 2 | 0 | Backfill to Grade: Backfill | -303.6527 | 0.0001 | -26.0131 | 103.2724 | 47.2352 | 190.0264 |
| 2 | 0 | Backfill to Grade: Backfill | -303.6527 | 0.0001 | -26.0131 | 103.2724 | 47.2352 | 190.0264 |
| 2 | 0 | Backfill to Grade: Backfill | -303.6527 | 0.0001 | -26.0131 | 103.2724 | 47.2352 | 190.0264 |
| 2 | 0 | Backfill to Grade: Backfill | -303.5128 | 0.0001 | -26.0121 | 103.2717 | 47.2305 | 189.9389 |
| 2 | 0 | Backfill to Grade: Backfill | -274.8117 | 10.4480 | -25.8090 | 100.4014 | 51.8775 | 23.3565 |
| 2 | 0 | Backfill to Grade: Backfill | -266.9394 | 13.3137 | -25.7533 | 105.1885 | 37.8382 | -22.3741 |
| 2 | 0 | Pave: Pave: Creep | -274.8117 | 10.4480 | -25.8090 | 100.4014 | 51.8775 | 23.3565 |
| 2 | 0 | Pave: Pave: Shrinkage | -274.8117 | 10.4480 | -25.8090 | 100.4014 | 51.8775 | 23.3565 |
| 2 | 0 | Pave: Pave: PT | -274.8117 | 10.4480 | -25.8090 | 100.4014 | 51.8775 | 23.3565 |
| 2 | 0 | Pave: Pave: Other PT | -274.8412 | 10.4480 | -25.8092 | 100.4016 | 51.8784 | 23.3749 |
| 2 | 0 | Pave: Pave: step 1 | -274.8412 | 10.4480 | -25.8092 | 100.4016 | 51.8784 | 23.3749 |
| 2 | 0 | Open Bridge to Traffic: | -274.8412 | 10.4480 | -25.8092 | 100.4016 | 51.8784 | 23.3749 |
| 2 | 0 | Open Bridge to Traffic: | -274.8412 | 10.4480 | -25.8092 | 100.4016 | 51.8784 | 23.3749 |
| 2 | 0 | Open Bridge to Traffic: | -274.8412 | 10.4480 | -25.8092 | 100.4016 | 51.8784 | 23.3749 |
| 2 | 0 | Open Bridge to Traffic: | -274.8254 | 10.4480 | -25.8091 | 100.4015 | 51.8779 | 23.3651 |
| 2 | 0 | Open Bridge to Traffic: | -264.9850 | 14.0301 | -25.7395 | 106.3853 | 34.3288 | -33.7982 |
| 2 | 0 | Open Bridge to Traffic: | -266.9531 | 13.3137 | -25.7534 | 105.1886 | 37.8386 | -22.3655 |
| 2 | 0 | Partial Live Load for | -274.8254 | 10.4480 | -25.8091 | 100.4015 | 51.8779 | 23.3651 |
| 2 | 0 | Partial Live Load for | -274.8254 | 10.4480 | -25.8091 | 100.4015 | 51.8779 | 23.3651 |
| 2 | 0 | Partial Live Load for | -274.8254 | 10.4480 | -25.8091 | 100.4015 | 51.8779 | 23.3651 |
| 2 | 0 | Partial Live Load for | -274.8097 | 10.4480 | -25.8090 | 100.4014 | 51.8774 | 23.3552 |

## RESULT : Member Sectional Forces

| Member | Station | Result Case | Force X (kips) | Force Y (kips) | Force Z (kips) | Moment X (kips-ft) | Moment Y (kips-ft) | Moment Z (kips-ft) |
|---|---|---|---|---|---|---|---|---|
| 2 | 0 | Partial Live Load for | -273.8257 | 10.8062 | -25.8020 | 100.9998 | 50.1225 | 17.6389 |
| 2 | 0 | Remove Long Term Live | -273.8257 | 10.8062 | -25.8020 | 100.9998 | 50.1225 | 17.6389 |
| 2 | 0 | Remove Long Term Live | -273.8257 | 10.8062 | -25.8020 | 100.9998 | 50.1225 | 17.6389 |
| 2 | 0 | Remove Long Term Live | -273.8257 | 10.8062 | -25.8020 | 100.9998 | 50.1225 | 17.6389 |
| 2 | 0 | Remove Long Term Live | -260.7803 | 10.8062 | -25.7097 | 100.9421 | 49.6876 | 9.4857 |
| 2 | 0 | Remove Long Term Live | -261.7643 | 10.4480 | -25.7167 | 100.3437 | 51.4425 | 15.2021 |
| 2 | 0 | Long Term Performance: | -261.7643 | 10.4480 | -25.7167 | 100.3437 | 51.4425 | 15.2021 |
| 2 | 0 | Long Term Performance: | -261.7643 | 10.4480 | -25.7167 | 100.3437 | 51.4425 | 15.2021 |
| 2 | 0 | Long Term Performance: | -261.7643 | 10.4480 | -25.7167 | 100.3437 | 51.4425 | 15.2021 |
| 2 | 0 | Long Term Performance: | -261.2412 | 10.4480 | -25.7130 | 100.3414 | 51.4251 | 14.8752 |
| 2 | 0 | Long Term Performance: | -253.3690 | 13.3137 | -25.6573 | 105.1285 | 37.3858 | -30.8554 |
| 2 | 0 | Long Term Performance: | -251.4009 | 14.0301 | -25.6434 | 106.3253 | 33.8760 | -42.2881 |
| 2 | 0 | Long Term Performance: | -233.9330 | 20.3735 | -31.4859 | 135.2892 | 31.6162 | -143.6447 |
| 2 | 0 | Strength Check: Strength | -261.2412 | 10.4480 | -25.7130 | 100.3414 | 51.4251 | 14.8752 |
| 2 | 0 | Strength Check: Strength | -261.2412 | 10.4480 | -25.7130 | 100.3414 | 51.4251 | 14.8752 |
| 2 | 0 | Strength Check: Strength | -261.2412 | 10.4480 | -25.7130 | 100.3414 | 51.4251 | 14.8752 |
| 2 | 0 | Strength Check: Strength | -261.2412 | 10.4480 | -25.7130 | 100.3414 | 51.4251 | 14.8751 |
| 2 | 0 | Strength Check: Strength | 28.8699 | 10.4479 | -23.6602 | 99.0524 | 41.7494 | -167.3036 |
| 2 | 0 | Strength Check: Strength | -233.9330 | 20.3735 | -31.4859 | 135.2892 | 31.6162 | -143.6447 |
| 2 | 1 | Set Precast In Place: Set | 0.0000 | 0.0000 | 0.0000 | 0.0000 | 0.0000 | 0.0000 |
| 2 | 1 | Set Precast In Place: Set | 0.2164 | 0.0000 | -30.5849 | 101.9227 | -5.8079 | -0.7212 |
| 2 | 1 | Tension PT: Tension PT: | 0.2164 | 0.0000 | -30.5849 | 101.9227 | -5.8079 | -0.7212 |
| 2 | 1 | Tension PT: Tension PT: | 0.2164 | 0.0000 | -30.5849 | 101.9227 | -5.8079 | -0.7212 |
| 2 | 1 | Tension PT: Tension PT: | 0.2164 | 0.0000 | -30.5849 | 101.9227 | -5.8079 | -0.7212 |
| 2 | 1 | Tension PT: Tension PT: | 0.2164 | 0.0000 | -30.5849 | 101.9227 | -5.8079 | -0.7212 |
| 2 | 1 | Tension PT: Tension PT: | -303.9915 | 0.0001 | -32.7374 | 103.2702 | 0.9448 | 189.7211 |
| 2 | 1 | Add Superstructure: Add | -303.9915 | 0.0001 | -32.7374 | 103.2702 | 0.9448 | 189.7211 |
| 2 | 1 | Add Superstructure: Add | -303.9915 | 0.0001 | -32.7374 | 103.2702 | 0.9448 | 189.7211 |
| 2 | 1 | Add Superstructure: Add | -303.9915 | 0.0001 | -32.7374 | 103.2702 | 0.9448 | 189.7211 |
| 2 | 1 | Add Superstructure: Add | -303.8771 | 0.0001 | -32.7366 | 103.2700 | 0.9423 | 189.6865 |
| 2 | 1 | Add Superstructure: Add | -303.7904 | 0.0001 | -44.9927 | 103.2700 | -8.7167 | 189.6865 |
| 2 | 1 | Backfill to Grade: Backfill | -303.7904 | 0.0001 | -44.9927 | 103.2700 | -8.7167 | 189.6865 |
| 2 | 1 | Backfill to Grade: Backfill | -303.7904 | 0.0001 | -44.9927 | 103.2700 | -8.7167 | 189.6865 |
| 2 | 1 | Backfill to Grade: Backfill | -303.7904 | 0.0001 | -44.9927 | 103.2700 | -8.7167 | 189.6865 |

## RESULT : Member Sectional Forces

| Member | Station | Result Case | Force X (kips) | Force Y (kips) | Force Z (kips) | Moment X (kips-ft) | Moment Y (kips-ft) | Moment Z (kips-ft) |
|---|---|---|---|---|---|---|---|---|
| 2 | 1 | Backfill to Grade: Backfill | -303.6391 | 0.0001 | -44.9916 | 103.2694 | -8.7201 | 189.6132 |
| 2 | 1 | Backfill to Grade: Backfill | -274.9380 | -14.4243 | -44.7886 | 122.2136 | -3.7530 | 29.6978 |
| 2 | 1 | Backfill to Grade: Backfill | -267.0658 | -19.2756 | -44.7328 | 127.0007 | -17.7045 | -14.5567 |
| 2 | 1 | Pave: Pave: Creep | -274.9380 | -14.4243 | -44.7886 | 122.2136 | -3.7530 | 29.6978 |
| 2 | 1 | Pave: Pave: Shrinkage | -274.9380 | -14.4243 | -44.7886 | 122.2136 | -3.7530 | 29.6978 |
| 2 | 1 | Pave: Pave: PT | -274.9380 | -14.4243 | -44.7886 | 122.2136 | -3.7530 | 29.6978 |
| 2 | 1 | Pave: Pave: Other PT | -274.9794 | -14.4243 | -44.7888 | 122.2136 | -3.7521 | 29.7014 |
| 2 | 1 | Pave: Pave: step 1 | -274.9665 | -14.4243 | -46.6046 | 122.2136 | -5.1831 | 29.7014 |
| 2 | 1 | Open Bridge to Traffic: | -274.9665 | -14.4243 | -46.6046 | 122.2136 | -5.1831 | 29.7014 |
| 2 | 1 | Open Bridge to Traffic: | -274.9665 | -14.4243 | -46.6046 | 122.2136 | -5.1831 | 29.7014 |
| 2 | 1 | Open Bridge to Traffic: | -274.9665 | -14.4243 | -46.6046 | 122.2136 | -5.1831 | 29.7014 |
| 2 | 1 | Open Bridge to Traffic: | -274.9507 | -14.4243 | -46.6045 | 122.2135 | -5.1834 | 29.6918 |
| 2 | 1 | Open Bridge to Traffic: | -265.0506 | -20.4884 | -54.9704 | 128.1974 | -29.2708 | -25.6265 |
| 2 | 1 | Open Bridge to Traffic: | -267.0306 | -19.2756 | -53.2972 | 127.0006 | -24.4533 | -14.5628 |
| 2 | 1 | Partial Live Load for | -274.9507 | -14.4243 | -46.6045 | 122.2135 | -5.1834 | 29.6918 |
| 2 | 1 | Partial Live Load for | -274.9507 | -14.4243 | -46.6045 | 122.2135 | -5.1834 | 29.6918 |
| 2 | 1 | Partial Live Load for | -274.9507 | -14.4243 | -46.6045 | 122.2135 | -5.1834 | 29.6918 |
| 2 | 1 | Partial Live Load for | -274.9347 | -14.4243 | -46.6043 | 122.2135 | -5.1838 | 29.6822 |
| 2 | 1 | Partial Live Load for | -273.9448 | -15.0307 | -47.4409 | 122.8119 | -7.5925 | 24.1503 |
| 2 | 1 | Remove Long Term Live | -273.9448 | -15.0307 | -47.4409 | 122.8119 | -7.5925 | 24.1503 |
| 2 | 1 | Remove Long Term Live | -273.9448 | -15.0307 | -47.4409 | 122.8119 | -7.5925 | 24.1503 |
| 2 | 1 | Remove Long Term Live | -273.9448 | -15.0307 | -47.4409 | 122.8119 | -7.5925 | 24.1503 |
| 2 | 1 | Remove Long Term Live | -260.9764 | -15.0307 | -47.3492 | 122.7535 | -7.8802 | 15.9009 |
| 2 | 1 | Remove Long Term Live | -261.9664 | -14.4243 | -46.5126 | 122.1551 | -5.4715 | 21.4327 |
| 2 | 1 | Long Term Performance: | -261.9664 | -14.4243 | -46.5126 | 122.1551 | -5.4715 | 21.4327 |
| 2 | 1 | Long Term Performance: | -261.9664 | -14.4243 | -46.5126 | 122.1551 | -5.4715 | 21.4327 |
| 2 | 1 | Long Term Performance: | -261.9664 | -14.4243 | -46.5126 | 122.1551 | -5.4715 | 21.4327 |
| 2 | 1 | Long Term Performance: | -261.3969 | -14.4243 | -46.5086 | 122.1532 | -5.4841 | 21.1638 |
| 2 | 1 | Long Term Performance: | -253.4769 | -19.2756 | -53.2013 | 126.9403 | -24.7540 | -23.0908 |
| 2 | 1 | Long Term Performance: | -251.4969 | -20.4884 | -54.8745 | 128.1370 | -29.5715 | -34.1544 |
| 2 | 1 | Long Term Performance: | -233.9443 | -14.1450 | -72.6960 | 157.1010 | -50.4807 | -125.5127 |
| 2 | 1 | Strength Check: Strength | -261.3969 | -14.4243 | -46.5086 | 122.1532 | -5.4841 | 21.1638 |
| 2 | 1 | Strength Check: Strength | -261.3969 | -14.4243 | -46.5086 | 122.1532 | -5.4841 | 21.1638 |
| 2 | 1 | Strength Check: Strength | -261.3969 | -14.4243 | -46.5086 | 122.1532 | -5.4841 | 21.1638 |

## RESULT : Member Sectional Forces

| Member | Station | Result Case | Force X (kips) | Force Y (kips) | Force Z (kips) | Moment X (kips-ft) | Moment Y (kips-ft) | Moment Z (kips-ft) |
|---|---|---|---|---|---|---|---|---|
| 2 | 1 | Strength Check: Strength | -261.3969 | -14.4243 | -46.5086 | 122.1532 | -5.4841 | 21.1638 |
| 2 | 1 | Strength Check: Strength | 29.0170 | -14.4244 | -44.4537 | 120.8668 | -11.9308 | -160.6365 |
| 2 | 1 | Strength Check: Strength | -233.9442 | -14.1450 | -72.6960 | 157.1010 | -50.4807 | -125.5127 |
| 2 | 2 | Set Precast In Place: Set | 0.0000 | 0.0000 | 0.0000 | 0.0000 | 0.0000 | 0.0000 |
| 2 | 2 | Set Precast In Place: Set | 0.2640 | 0.0000 | -37.3064 | 101.9227 | -59.3127 | -0.7212 |
| 2 | 2 | Tension PT: Tension PT: | 0.2640 | 0.0000 | -37.3064 | 101.9227 | -59.3127 | -0.7212 |
| 2 | 2 | Tension PT: Tension PT: | 0.2640 | 0.0000 | -37.3064 | 101.9227 | -59.3127 | -0.7212 |
| 2 | 2 | Tension PT: Tension PT: | 0.2640 | 0.0000 | -37.3064 | 101.9227 | -59.3127 | -0.7212 |
| 2 | 2 | Tension PT: Tension PT: | 0.2640 | 0.0000 | -37.3064 | 101.9227 | -59.3127 | -0.7212 |
| 2 | 2 | Tension PT: Tension PT: | -305.1319 | 0.0001 | -39.4673 | 103.2755 | -55.9398 | 190.4741 |
| 2 | 2 | Add Superstructure: Add | -305.1319 | 0.0001 | -39.4673 | 103.2755 | -55.9398 | 190.4741 |
| 2 | 2 | Add Superstructure: Add | -305.1319 | 0.0001 | -39.4673 | 103.2755 | -55.9398 | 190.4741 |
| 2 | 2 | Add Superstructure: Add | -305.1319 | 0.0001 | -39.4673 | 103.2755 | -55.9398 | 190.4741 |
| 2 | 2 | Add Superstructure: Add | -304.9592 | 0.0001 | -39.4661 | 103.2748 | -55.9417 | 190.3661 |
| 2 | 2 | Add Superstructure: Add | -304.7858 | 0.0001 | -63.9784 | 103.2748 | -94.5777 | 190.3661 |
| 2 | 2 | Backfill to Grade: Backfill | -304.7858 | 0.0001 | -63.9784 | 103.2748 | -94.5777 | 190.3661 |
| 2 | 2 | Backfill to Grade: Backfill | -304.7858 | 0.0001 | -63.9784 | 103.2748 | -94.5777 | 190.3661 |
| 2 | 2 | Backfill to Grade: Backfill | -304.7858 | 0.0001 | -63.9784 | 103.2748 | -94.5777 | 190.3661 |
| 2 | 2 | Backfill to Grade: Backfill | -304.6010 | 0.0001 | -63.9771 | 103.2739 | -94.5797 | 190.2507 |
| 2 | 2 | Backfill to Grade: Backfill | -275.8999 | -64.1688 | -63.7740 | 165.8470 | -89.2926 | -31.6036 |
| 2 | 2 | Backfill to Grade: Backfill | -268.0276 | -84.4542 | -63.7183 | 170.6341 | -103.1563 | -95.6683 |
| 2 | 2 | Pave: Pave: Creep | -275.8999 | -64.1688 | -63.7740 | 165.8470 | -89.2926 | -31.6036 |
| 2 | 2 | Pave: Pave: Shrinkage | -275.8999 | -64.1688 | -63.7740 | 165.8470 | -89.2926 | -31.6036 |
| 2 | 2 | Pave: Pave: PT | -275.8999 | -64.1688 | -63.7740 | 165.8470 | -89.2926 | -31.6036 |
| 2 | 2 | Pave: Pave: Other PT | -275.9766 | -64.1688 | -63.7745 | 165.8474 | -89.2917 | -31.5557 |
| 2 | 2 | Pave: Pave: step 1 | -275.9509 | -64.1688 | -67.4060 | 165.8474 | -95.0156 | -31.5557 |
| 2 | 2 | Open Bridge to Traffic: | -275.9509 | -64.1688 | -67.4060 | 165.8474 | -95.0156 | -31.5557 |
| 2 | 2 | Open Bridge to Traffic: | -275.9509 | -64.1688 | -67.4060 | 165.8474 | -95.0156 | -31.5557 |
| 2 | 2 | Open Bridge to Traffic: | -275.9509 | -64.1688 | -67.4060 | 165.8474 | -95.0156 | -31.5557 |
| 2 | 2 | Open Bridge to Traffic: | -275.9346 | -64.1688 | -67.4059 | 165.8473 | -95.0158 | -31.5659 |
| 2 | 2 | Open Bridge to Traffic: | -265.9748 | -89.5255 | -84.2073 | 171.8311 | -138.9374 | -111.6467 |
| 2 | 2 | Open Bridge to Traffic: | -267.9668 | -84.4542 | -80.8470 | 170.6344 | -130.1531 | -95.6306 |
| 2 | 2 | Partial Live Load for | -275.9346 | -64.1688 | -67.4059 | 165.8473 | -95.0158 | -31.5659 |
| 2 | 2 | Partial Live Load for | -275.9346 | -64.1688 | -67.4059 | 165.8473 | -95.0158 | -31.5659 |

## RESULT : Member Sectional Forces

| Member | Station | Result Case | Force X (kips) | Force Y (kips) | Force Z (kips) | Moment X (kips-ft) | Moment Y (kips-ft) | Moment Z (kips-ft) |
|---|---|---|---|---|---|---|---|---|
| 2 | 2 | Partial Live Load for | -275.9346 | -64.1688 | -67.4059 | 165.8473 | -95.0158 | -31.5659 |
| 2 | 2 | Partial Live Load for | -275.9182 | -64.1688 | -67.4058 | 165.8472 | -95.0160 | -31.5762 |
| 2 | 2 | Partial Live Load for | -274.9222 | -66.7045 | -69.0859 | 166.4456 | -99.4081 | -39.5842 |
| 2 | 2 | Remove Long Term Live | -274.9222 | -66.7045 | -69.0859 | 166.4456 | -99.4081 | -39.5842 |
| 2 | 2 | Remove Long Term Live | -274.9222 | -66.7045 | -69.0859 | 166.4456 | -99.4081 | -39.5842 |
| 2 | 2 | Remove Long Term Live | -274.9222 | -66.7045 | -69.0859 | 166.4456 | -99.4081 | -39.5842 |
| 2 | 2 | Remove Long Term Live | -262.1931 | -66.7045 | -68.9958 | 166.3893 | -99.5485 | -47.5398 |
| 2 | 2 | Remove Long Term Live | -263.1891 | -64.1688 | -67.3157 | 165.7909 | -95.1563 | -39.5317 |
| 2 | 2 | Long Term Performance: | -263.1891 | -64.1688 | -67.3157 | 165.7909 | -95.1563 | -39.5317 |
| 2 | 2 | Long Term Performance: | -263.1891 | -64.1688 | -67.3157 | 165.7909 | -95.1563 | -39.5317 |
| 2 | 2 | Long Term Performance: | -263.1891 | -64.1688 | -67.3157 | 165.7909 | -95.1563 | -39.5317 |
| 2 | 2 | Long Term Performance: | -262.4799 | -64.1688 | -67.3107 | 165.7878 | -95.1642 | -39.9749 |
| 2 | 2 | Long Term Performance: | -254.5122 | -84.4542 | -80.7519 | 170.5749 | -130.3015 | -104.0395 |
| 2 | 2 | Long Term Performance: | -252.5202 | -89.5255 | -84.1122 | 171.7716 | -139.0858 | -120.0557 |
| 2 | 2 | Long Term Performance: | -234.8828 | -83.1821 | -113.9126 | 200.7356 | -197.5257 | -201.4155 |
| 2 | 2 | Strength Check: Strength | -262.4799 | -64.1688 | -67.3107 | 165.7878 | -95.1642 | -39.9749 |
| 2 | 2 | Strength Check: Strength | -262.4799 | -64.1688 | -67.3107 | 165.7878 | -95.1642 | -39.9749 |
| 2 | 2 | Strength Check: Strength | -262.4799 | -64.1688 | -67.3107 | 165.7878 | -95.1642 | -39.9749 |
| 2 | 2 | Strength Check: Strength | -262.4799 | -64.1688 | -67.3107 | 165.7878 | -95.1642 | -39.9749 |
| 2 | 2 | Strength Check: Strength | 29.1642 | -64.1689 | -65.2471 | 164.4957 | -98.3854 | -222.5755 |
| 2 | 2 | Strength Check: Strength | -234.8828 | -83.1821 | -113.9126 | 200.7356 | -197.5257 | -201.4156 |
| 3 | 0 | Set Precast In Place: Set | 0.0000 | 0.0000 | 0.0000 | 0.0000 | 0.0000 | 0.0000 |
| 3 | 0 | Set Precast In Place: Set | -0.1541 | 0.0000 | 21.7760 | 0.0000 | -59.3127 | 0.0000 |
| 3 | 0 | Tension PT: Tension PT: | -0.1575 | 0.0000 | 22.2589 | 0.0000 | -59.3127 | 0.0000 |
| 3 | 0 | Tension PT: Tension PT: | -0.1575 | 0.0000 | 22.2594 | 0.0000 | -59.3127 | 0.0000 |
| 3 | 0 | Tension PT: Tension PT: | -0.1575 | 0.0000 | 22.2594 | 0.0000 | -59.3127 | 0.0000 |
| 3 | 0 | Tension PT: Tension PT: | -0.1575 | 0.0000 | 22.2594 | 0.0000 | -59.3127 | 0.0000 |
| 3 | 0 | Tension PT: Tension PT: | -305.5659 | -27.7333 | 21.8621 | 0.6693 | -55.9398 | 191.2001 |
| 3 | 0 | Add Superstructure: Add | -305.5661 | -27.7194 | 21.8900 | 0.7884 | -55.9398 | 191.1993 |
| 3 | 0 | Add Superstructure: Add | -305.5661 | -27.7194 | 21.8902 | 0.7884 | -55.9398 | 191.1993 |
| 3 | 0 | Add Superstructure: Add | -305.5661 | -27.7194 | 21.8902 | 0.7884 | -55.9398 | 191.1993 |
| 3 | 0 | Add Superstructure: Add | -305.3933 | -27.7038 | 21.8904 | 0.7881 | -55.9417 | 191.0913 |
| 3 | 0 | Add Superstructure: Add | -305.6169 | -27.7038 | 53.4763 | 0.7881 | -94.5777 | 191.0913 |
| 3 | 0 | Backfill to Grade: Backfill | -305.6250 | -27.6952 | 54.6315 | 0.8821 | -94.5777 | 191.0906 |

## RESULT : Member Sectional Forces

| Member | Station | | Result Case | Force X (kips) | Force Y (kips) | Force Z (kips) | Moment X (kips-ft) | Moment Y (kips-ft) | Moment Z (kips-ft) |
|---|---|---|---|---|---|---|---|---|---|
| 3 | 0 | Backfill to Grade: Backfill | -305.6250 | -27.6952 | 54.6322 | 0.8821 | -94.5777 | 191.0906 | |
| 3 | 0 | Backfill to Grade: Backfill | -305.6250 | -27.6952 | 54.6322 | 0.8821 | -94.5777 | 191.0906 | |
| 3 | 0 | Backfill to Grade: Backfill | -305.4402 | -27.6784 | 54.6325 | 0.8817 | -94.5797 | 190.9752 | |
| 3 | 0 | Backfill to Grade: Backfill | -276.7335 | 115.3260 | 54.0299 | -113.9887 | -89.2926 | -29.6236 | |
| 3 | 0 | Backfill to Grade: Backfill | -268.8719 | 159.0426 | 55.6049 | -113.9453 | -103.1563 | -93.6547 | |
| 3 | 0 | Pave: Pave: Creep | -276.7337 | 118.8341 | 54.0672 | -114.1133 | -89.2926 | -29.6227 | |
| 3 | 0 | Pave: Pave: Shrinkage | -276.7337 | 118.8341 | 54.0673 | -114.1133 | -89.2926 | -29.6227 | |
| 3 | 0 | Pave: Pave: PT | -276.7337 | 118.8341 | 54.0673 | -114.1133 | -89.2926 | -29.6227 | |
| 3 | 0 | Pave: Pave: Other PT | -276.8104 | 118.8272 | 54.0672 | -114.1131 | -89.2917 | -29.5748 | |
| 3 | 0 | Pave: Pave: step 1 | -276.8435 | 118.8272 | 58.7466 | -114.1131 | -95.0156 | -29.5748 | |
| 3 | 0 | Open Bridge to Traffic: | -276.8443 | 119.4446 | 58.8685 | -114.1359 | -95.0156 | -29.5746 | |
| 3 | 0 | Open Bridge to Traffic: | -276.8443 | 119.4446 | 58.8686 | -114.1359 | -95.0156 | -29.5746 | |
| 3 | 0 | Open Bridge to Traffic: | -276.8443 | 119.4446 | 58.8686 | -114.1359 | -95.0156 | -29.5746 | |
| 3 | 0 | Open Bridge to Traffic: | -276.8281 | 119.4461 | 58.8686 | -114.1360 | -95.0158 | -29.5848 | |
| 3 | 0 | Open Bridge to Traffic: | -267.1550 | 174.0919 | 82.5770 | -114.0817 | -138.9374 | -109.6237 | |
| 3 | 0 | Open Bridge to Traffic: | -269.0896 | 163.1628 | 77.8353 | -114.0925 | -130.1531 | -93.6159 | |
| 3 | 0 | Partial Live Load for | -276.8284 | 119.8566 | 58.9154 | -114.1498 | -95.0158 | -29.5847 | |
| 3 | 0 | Partial Live Load for | -276.8284 | 119.8566 | 58.9155 | -114.1498 | -95.0158 | -29.5847 | |
| 3 | 0 | Partial Live Load for | -276.8284 | 119.8566 | 58.9155 | -114.1498 | -95.0158 | -29.5847 | |
| 3 | 0 | Partial Live Load for | -276.8120 | 119.8581 | 58.9155 | -114.1499 | -95.0160 | -29.5950 | |
| 3 | 0 | Partial Live Load for | -275.8447 | 125.3227 | 61.2864 | -114.1444 | -99.4081 | -37.5989 | |
| 3 | 0 | Remove Long Term Live | -275.8814 | 146.7133 | 66.4809 | -114.3639 | -99.4081 | -37.5973 | |
| 3 | 0 | Remove Long Term Live | -275.8814 | 146.7133 | 66.4850 | -114.3639 | -99.4081 | -37.5973 | |
| 3 | 0 | Remove Long Term Live | -275.8814 | 146.7133 | 66.4850 | -114.3639 | -99.4081 | -37.5973 | |
| 3 | 0 | Remove Long Term Live | -263.1518 | 147.8716 | 66.5012 | -114.3916 | -99.5485 | -45.5530 | |
| 3 | 0 | Remove Long Term Live | -264.1191 | 142.4071 | 64.1304 | -114.3970 | -95.1563 | -37.5491 | |
| 3 | 0 | Long Term Performance: | -264.1184 | 142.0419 | 64.0221 | -114.3976 | -95.1563 | -37.5491 | |
| 3 | 0 | Long Term Performance: | -264.1184 | 142.0419 | 64.0227 | -114.3976 | -95.1563 | -37.5491 | |
| 3 | 0 | Long Term Performance: | -264.1184 | 142.0419 | 64.0227 | -114.3976 | -95.1563 | -37.5491 | |
| 3 | 0 | Long Term Performance: | -263.4092 | 142.1066 | 64.0236 | -114.3991 | -95.1642 | -37.9923 | |
| 3 | 0 | Long Term Performance: | -255.6708 | 185.8232 | 82.9904 | -114.3557 | -130.3015 | -102.0234 | |
| 3 | 0 | Long Term Performance: | -253.7361 | 196.7524 | 87.7320 | -114.3449 | -139.0858 | -118.0312 | |
| 3 | 0 | Long Term Performance: | -236.5449 | 208.5831 | 120.9826 | -114.6268 | -197.5257 | -199.1841 | |
| 3 | 0 | Strength Check: Strength | -263.4092 | 142.1066 | 64.0236 | -114.3992 | -95.1642 | -37.9923 | |

## RESULT : Member Sectional Forces

| Member | Station | Result Case | Force X (kips) | Force Y (kips) | Force Z (kips) | Moment X (kips-ft) | Moment Y (kips-ft) | Moment Z (kips-ft) |
|---|---|---|---|---|---|---|---|---|
| 3 | 0 | Strength Check: Strength | -263.4092 | 142.1066 | 64.0236 | -114.3992 | -95.1642 | -37.9923 |
| 3 | 0 | Strength Check: Strength | -263.4092 | 142.1066 | 64.0236 | -114.3992 | -95.1642 | -37.9923 |
| 3 | 0 | Strength Check: Strength | -263.4092 | 142.1066 | 64.0236 | -114.3992 | -95.1642 | -37.9924 |
| 3 | 0 | Strength Check: Strength | 28.2468 | 168.5885 | 64.4034 | -115.0386 | -98.3854 | -220.5975 |
| 3 | 0 | Strength Check: Strength | -236.5448 | 208.5831 | 120.9826 | -114.6269 | -197.5257 | -199.1841 |
| 3 | 1 | Set Precast In Place: Set | 0.0000 | 0.0000 | 0.0000 | 0.0000 | 0.0000 | 0.0000 |
| 3 | 1 | Set Precast In Place: Set | -0.0275 | 0.0000 | 3.8876 | 0.0000 | -6.0189 | 0.0000 |
| 3 | 1 | Tension PT: Tension PT: | -0.0309 | 0.0000 | 4.3705 | 0.0000 | -4.0134 | 0.0000 |
| 3 | 1 | Tension PT: Tension PT: | -0.0309 | 0.0000 | 4.3710 | 0.0000 | -4.0114 | 0.0000 |
| 3 | 1 | Tension PT: Tension PT: | -0.0309 | 0.0000 | 4.3710 | 0.0000 | -4.0114 | 0.0000 |
| 3 | 1 | Tension PT: Tension PT: | -0.0309 | 0.0000 | 4.3710 | 0.0000 | -4.0114 | 0.0000 |
| 3 | 1 | Tension PT: Tension PT: | -306.8117 | -27.7333 | 3.9640 | 0.6706 | -2.3226 | 76.1942 |
| 3 | 1 | Add Superstructure: Add | -306.8119 | -27.7194 | 3.9919 | 0.7897 | -2.2067 | 76.2509 |
| 3 | 1 | Add Superstructure: Add | -306.8119 | -27.7194 | 3.9921 | 0.7897 | -2.2061 | 76.2509 |
| 3 | 1 | Add Superstructure: Add | -306.8119 | -27.7194 | 3.9921 | 0.7897 | -2.2061 | 76.2509 |
| 3 | 1 | Add Superstructure: Add | -306.6400 | -27.7038 | 3.9923 | 0.7893 | -2.2071 | 76.2083 |
| 3 | 1 | Add Superstructure: Add | -306.6350 | -27.7038 | 3.2833 | 0.7893 | 23.2765 | 76.2083 |
| 3 | 1 | Backfill to Grade: Backfill | -306.6431 | -27.6952 | 4.4385 | 0.8834 | 28.0745 | 76.2435 |
| 3 | 1 | Backfill to Grade: Backfill | -306.6432 | -27.6952 | 4.4392 | 0.8834 | 28.0776 | 76.2435 |
| 3 | 1 | Backfill to Grade: Backfill | -306.6432 | -27.6952 | 4.4392 | 0.8834 | 28.0776 | 76.2435 |
| 3 | 1 | Backfill to Grade: Backfill | -306.4589 | -27.6784 | 4.4394 | 0.8830 | 28.0765 | 76.1979 |
| 3 | 1 | Backfill to Grade: Backfill | -277.7521 | -15.7507 | 3.8369 | 0.9746 | 30.8610 | 177.3353 |
| 3 | 1 | Backfill to Grade: Backfill | -269.8906 | -12.7028 | 5.4119 | 1.0180 | 23.5389 | 210.4168 |
| 3 | 1 | Pave: Pave: Creep | -277.7524 | -12.2426 | 3.8742 | 0.8501 | 31.0161 | 191.9063 |
| 3 | 1 | Pave: Pave: Shrinkage | -277.7524 | -12.2426 | 3.8743 | 0.8501 | 31.0165 | 191.9063 |
| 3 | 1 | Pave: Pave: PT | -277.7524 | -12.2426 | 3.8743 | 0.8501 | 31.0165 | 191.9063 |
| 3 | 1 | Pave: Pave: Other PT | -277.8286 | -12.2495 | 3.8742 | 0.8502 | 31.0169 | 191.9252 |
| 3 | 1 | Pave: Pave: step 1 | -277.8279 | -12.2495 | 3.7692 | 0.8502 | 34.7923 | 191.9252 |
| 3 | 1 | Open Bridge to Traffic: | -277.8288 | -11.6321 | 3.8910 | 0.8274 | 35.2983 | 194.4899 |
| 3 | 1 | Open Bridge to Traffic: | -277.8288 | -11.6321 | 3.8911 | 0.8274 | 35.2987 | 194.4899 |
| 3 | 1 | Open Bridge to Traffic: | -277.8288 | -11.6321 | 3.8911 | 0.8274 | 35.2987 | 194.4899 |
| 3 | 1 | Open Bridge to Traffic: | -277.8125 | -11.6306 | 3.8911 | 0.8274 | 35.2986 | 194.4859 |
| 3 | 1 | Open Bridge to Traffic: | -267.9821 | -7.8206 | 5.3719 | 0.8816 | 43.6856 | 235.8378 |
| 3 | 1 | Open Bridge to Traffic: | -269.9482 | -8.5826 | 5.0758 | 0.8708 | 42.0082 | 227.5674 |

## RESULT : Member Sectional Forces

| Member | Station | Result Case | Force X (kips) | Force Y (kips) | Force Z (kips) | Moment X (kips-ft) | Moment Y (kips-ft) | Moment Z (kips-ft) |
|---|---|---|---|---|---|---|---|---|
| 3 | 1 | Partial Live Load for | -277.8128 | -11.2201 | 3.9379 | 0.8135 | 35.4931 | 196.1908 |
| 3 | 1 | Partial Live Load for | -277.8128 | -11.2201 | 3.9380 | 0.8135 | 35.4935 | 196.1908 |
| 3 | 1 | Partial Live Load for | -277.8128 | -11.2201 | 3.9380 | 0.8135 | 35.4935 | 196.1908 |
| 3 | 1 | Partial Live Load for | -277.7965 | -11.2186 | 3.9381 | 0.8135 | 35.4934 | 196.1867 |
| 3 | 1 | Partial Live Load for | -276.8134 | -10.8376 | 4.0861 | 0.8189 | 36.3321 | 200.3219 |
| 3 | 1 | Remove Long Term Live | -276.8502 | 10.5530 | 9.2807 | 0.5994 | 57.9062 | 289.1643 |
| 3 | 1 | Remove Long Term Live | -276.8502 | 10.5530 | 9.2848 | 0.5994 | 57.9235 | 289.1643 |
| 3 | 1 | Remove Long Term Live | -276.8502 | 10.5530 | 9.2848 | 0.5994 | 57.9235 | 289.1643 |
| 3 | 1 | Remove Long Term Live | -264.1288 | 11.7114 | 9.3009 | 0.5718 | 57.8501 | 286.0245 |
| 3 | 1 | Remove Long Term Live | -265.1118 | 11.3304 | 9.1529 | 0.5664 | 57.0114 | 281.8893 |
| 3 | 1 | Long Term Performance: | -265.1110 | 10.9652 | 9.0446 | 0.5658 | 56.5619 | 280.3728 |
| 3 | 1 | Long Term Performance: | -265.1110 | 10.9652 | 9.0452 | 0.5658 | 56.5643 | 280.3728 |
| 3 | 1 | Long Term Performance: | -265.1110 | 10.9652 | 9.0452 | 0.5658 | 56.5643 | 280.3728 |
| 3 | 1 | Long Term Performance: | -264.4014 | 11.0299 | 9.0461 | 0.5642 | 56.5602 | 280.1980 |
| 3 | 1 | Long Term Performance: | -256.5371 | 14.0779 | 10.2307 | 0.6076 | 63.2698 | 313.2794 |
| 3 | 1 | Long Term Performance: | -254.5710 | 14.8399 | 10.5269 | 0.6185 | 64.9472 | 321.5498 |
| 3 | 1 | Long Term Performance: | -237.1561 | 26.6705 | 12.1687 | 0.3366 | 78.9659 | 289.5327 |
| 3 | 1 | Strength Check: Strength | -264.4014 | 11.0299 | 9.0461 | 0.5642 | 56.5601 | 280.1980 |
| 3 | 1 | Strength Check: Strength | -264.4014 | 11.0299 | 9.0461 | 0.5642 | 56.5601 | 280.1980 |
| 3 | 1 | Strength Check: Strength | -264.4014 | 11.0299 | 9.0461 | 0.5642 | 56.5601 | 280.1980 |
| 3 | 1 | Strength Check: Strength | -264.4014 | 11.0299 | 9.0461 | 0.5642 | 56.5601 | 280.1979 |
| 3 | 1 | Strength Check: Strength | 28.6357 | 37.5118 | 9.4356 | -0.0766 | 54.9507 | 207.3958 |
| 3 | 1 | Strength Check: Strength | -237.1561 | 26.6705 | 12.1687 | 0.3365 | 78.9658 | 289.5327 |
| 3 | 2 | Set Precast In Place: Set | 0.0000 | 0.0000 | 0.0000 | 0.0000 | 0.0000 | 0.0000 |
| 3 | 2 | Set Precast In Place: Set | 0.0991 | 0.0000 | -14.0008 | 0.0000 | -27.0203 | 0.0000 |
| 3 | 2 | Tension PT: Tension PT: | 0.0956 | 0.0000 | -13.5179 | 0.0000 | -23.0092 | 0.0000 |
| 3 | 2 | Tension PT: Tension PT: | 0.0956 | 0.0000 | -13.5174 | 0.0000 | -23.0053 | 0.0000 |
| 3 | 2 | Tension PT: Tension PT: | 0.0956 | 0.0000 | -13.5174 | 0.0000 | -23.0053 | 0.0000 |
| 3 | 2 | Tension PT: Tension PT: | 0.0956 | 0.0000 | -13.5174 | 0.0000 | -23.0053 | 0.0000 |
| 3 | 2 | Tension PT: Tension PT: | -303.6656 | -27.7333 | -13.9030 | 0.6570 | -22.8619 | -40.9034 |
| 3 | 2 | Add Superstructure: Add | -303.6657 | -27.7194 | -13.8751 | 0.7762 | -22.6301 | -40.7891 |
| 3 | 2 | Add Superstructure: Add | -303.6657 | -27.7194 | -13.8750 | 0.7762 | -22.6289 | -40.7891 |
| 3 | 2 | Add Superstructure: Add | -303.6657 | -27.7194 | -13.8750 | 0.7762 | -22.6289 | -40.7891 |
| 3 | 2 | Add Superstructure: Add | -303.4950 | -27.7038 | -13.8748 | 0.7758 | -22.6290 | -40.7661 |

## RESULT : Member Sectional Forces

| Member | Station | Result Case | Force X (kips) | Force Y (kips) | Force Z (kips) | Moment X (kips-ft) | Moment Y (kips-ft) | Moment Z (kips-ft) |
|---|---|---|---|---|---|---|---|---|
| 3 | 2 | Add Superstructure: Add | -303.2614 | -27.7038 | -46.8787 | 0.7758 | -67.1547 | -40.7661 |
| 3 | 2 | Backfill to Grade: Backfill | -303.2696 | -27.6952 | -45.7234 | 0.8699 | -57.5587 | -40.6950 |
| 3 | 2 | Backfill to Grade: Backfill | -303.2696 | -27.6952 | -45.7227 | 0.8699 | -57.5526 | -40.6950 |
| 3 | 2 | Backfill to Grade: Backfill | -303.2696 | -27.6952 | -45.7227 | 0.8699 | -57.5526 | -40.6950 |
| 3 | 2 | Backfill to Grade: Backfill | -303.0861 | -27.6784 | -45.7225 | 0.8695 | -57.5529 | -40.6706 |
| 3 | 2 | Backfill to Grade: Backfill | -274.3793 | -146.8274 | -46.3251 | 115.9231 | -57.2710 | -162.1918 |
| 3 | 2 | Backfill to Grade: Backfill | -266.5177 | -184.4481 | -44.7500 | 115.9666 | -58.0515 | -200.9051 |
| 3 | 2 | Pave: Pave: Creep | -274.3795 | -143.3193 | -46.2877 | 115.7986 | -56.9608 | -133.0509 |
| 3 | 2 | Pave: Pave: Shrinkage | -274.3795 | -143.3193 | -46.2876 | 115.7986 | -56.9599 | -133.0509 |
| 3 | 2 | Pave: Pave: PT | -274.3795 | -143.3193 | -46.2876 | 115.7986 | -56.9599 | -133.0509 |
| 3 | 2 | Pave: Pave: Other PT | -274.4554 | -143.3262 | -46.2877 | 115.7988 | -56.9599 | -133.0609 |
| 3 | 2 | Pave: Pave: step 1 | -274.4208 | -143.3262 | -51.1772 | 115.7988 | -63.5563 | -133.0609 |
| 3 | 2 | Open Bridge to Traffic: | -274.4217 | -142.7087 | -51.0554 | 115.7759 | -62.5442 | -127.9316 |
| 3 | 2 | Open Bridge to Traffic: | -274.4217 | -142.7087 | -51.0553 | 115.7759 | -62.5434 | -127.9316 |
| 3 | 2 | Open Bridge to Traffic: | -274.4217 | -142.7087 | -51.0553 | 115.7759 | -62.5434 | -127.9316 |
| 3 | 2 | Open Bridge to Traffic: | -274.4055 | -142.7073 | -51.0552 | 115.7759 | -62.5434 | -127.9294 |
| 3 | 2 | Open Bridge to Traffic: | -264.4178 | -189.7331 | -71.8021 | 115.8302 | -94.1648 | -176.3210 |
| 3 | 2 | Open Bridge to Traffic: | -266.4153 | -180.3280 | -67.6527 | 115.8193 | -87.8406 | -166.6427 |
| 3 | 2 | Partial Live Load for | -274.4058 | -142.2968 | -51.0084 | 115.7620 | -62.1546 | -124.5197 |
| 3 | 2 | Partial Live Load for | -274.4058 | -142.2968 | -51.0083 | 115.7620 | -62.1538 | -124.5197 |
| 3 | 2 | Partial Live Load for | -274.4058 | -142.2968 | -51.0083 | 115.7620 | -62.1538 | -124.5197 |
| 3 | 2 | Partial Live Load for | -274.3895 | -142.2953 | -51.0083 | 115.7620 | -62.1538 | -124.5175 |
| 3 | 2 | Partial Live Load for | -273.3907 | -146.9979 | -53.0830 | 115.7674 | -65.3159 | -129.3567 |
| 3 | 2 | Remove Long Term Live | -273.4275 | -125.6072 | -47.8885 | 115.5480 | -22.1677 | 48.3266 |
| 3 | 2 | Remove Long Term Live | -273.4275 | -125.6072 | -47.8843 | 115.5480 | -22.1329 | 48.3266 |
| 3 | 2 | Remove Long Term Live | -273.4275 | -125.6072 | -47.8843 | 115.5480 | -22.1329 | 48.3266 |
| 3 | 2 | Remove Long Term Live | -260.7223 | -124.4489 | -47.8683 | 115.5204 | -22.1403 | 50.0076 |
| 3 | 2 | Remove Long Term Live | -261.7211 | -119.7463 | -45.7936 | 115.5150 | -18.9781 | 54.8468 |
| 3 | 2 | Long Term Performance: | -261.7203 | -120.1115 | -45.9019 | 115.5144 | -19.8772 | 51.8137 |
| 3 | 2 | Long Term Performance: | -261.7203 | -120.1115 | -45.9013 | 115.5144 | -19.8723 | 51.8137 |
| 3 | 2 | Long Term Performance: | -261.7203 | -120.1115 | -45.9013 | 115.5144 | -19.8723 | 51.8137 |
| 3 | 2 | Long Term Performance: | -261.0094 | -120.0468 | -45.9004 | 115.5128 | -19.8727 | 51.9067 |
| 3 | 2 | Long Term Performance: | -253.0193 | -157.6675 | -62.4979 | 115.5562 | -45.1698 | 13.1935 |
| 3 | 2 | Long Term Performance: | -251.0218 | -167.0727 | -66.6472 | 115.5671 | -51.4941 | 3.5152 |

## RESULT : Member Sectional Forces

| Member | Station | Result Case | Force X (kips) | Force Y (kips) | Force Z (kips) | Moment X (kips-ft) | Moment Y (kips-ft) | Moment Z (kips-ft) |
|---|---|---|---|---|---|---|---|---|
| 3 | 2 | Long Term Performance: | -233.3832 | -155.2420 | -96.6142 | 115.2852 | -96.2963 | 20.6339 |
| 3 | 2 | Strength Check: Strength | -261.0094 | -120.0468 | -45.9004 | 115.5128 | -19.8729 | 51.9067 |
| 3 | 2 | Strength Check: Strength | -261.0094 | -120.0468 | -45.9004 | 115.5128 | -19.8729 | 51.9067 |
| 3 | 2 | Strength Check: Strength | -261.0094 | -120.0468 | -45.9004 | 115.5128 | -19.8729 | 51.9067 |
| 3 | 2 | Strength Check: Strength | -261.0094 | -120.0468 | -45.9004 | 115.5128 | -19.8729 | 51.9068 |
| 3 | 2 | Strength Check: Strength | 29.0247 | -93.5649 | -45.5321 | 114.8855 | -20.0082 | 90.9944 |
| 3 | 2 | Strength Check: Strength | -233.3832 | -155.2420 | -96.6142 | 115.2851 | -96.2965 | 20.6340 |
| 4 | 0 | Set Precast In Place: Set | 0.0000 | 0.0000 | 0.0000 | 0.0000 | 0.0000 | 0.0000 |
| 4 | 0 | Set Precast In Place: Set | -0.1293 | 0.0000 | 18.2746 | 0.0000 | -27.0203 | 0.0000 |
| 4 | 0 | Tension PT: Tension PT: | -0.1292 | 0.0000 | 18.2575 | 0.0000 | -23.0092 | 0.0000 |
| 4 | 0 | Tension PT: Tension PT: | -0.1292 | 0.0000 | 18.2570 | 0.0000 | -23.0053 | 0.0000 |
| 4 | 0 | Tension PT: Tension PT: | -0.1292 | 0.0000 | 18.2570 | 0.0000 | -23.0053 | 0.0000 |
| 4 | 0 | Tension PT: Tension PT: | -0.1292 | 0.0000 | 18.2570 | 0.0000 | -23.0053 | 0.0000 |
| 4 | 0 | Tension PT: Tension PT: | -303.8922 | 15.8935 | 18.1254 | -1.0419 | -22.8619 | -40.8914 |
| 4 | 0 | Add Superstructure: Add | -303.8922 | 15.8442 | 18.1230 | -1.0533 | -22.6301 | -40.7762 |
| 4 | 0 | Add Superstructure: Add | -303.8922 | 15.8442 | 18.1229 | -1.0533 | -22.6289 | -40.7762 |
| 4 | 0 | Add Superstructure: Add | -303.8922 | 15.8442 | 18.1229 | -1.0533 | -22.6289 | -40.7762 |
| 4 | 0 | Add Superstructure: Add | -303.7214 | 15.8365 | 18.1229 | -1.0528 | -22.6290 | -40.7531 |
| 4 | 0 | Add Superstructure: Add | -303.9506 | 15.8365 | 50.5107 | -1.0528 | -67.1547 | -40.7531 |
| 4 | 0 | Backfill to Grade: Backfill | -303.9501 | 15.8055 | 50.4432 | -1.0622 | -57.5587 | -40.6814 |
| 4 | 0 | Backfill to Grade: Backfill | -303.9501 | 15.8055 | 50.4425 | -1.0622 | -57.5526 | -40.6814 |
| 4 | 0 | Backfill to Grade: Backfill | -303.9501 | 15.8055 | 50.4425 | -1.0622 | -57.5526 | -40.6814 |
| 4 | 0 | Backfill to Grade: Backfill | -303.7665 | 15.7984 | 50.4424 | -1.0617 | -57.5529 | -40.6570 |
| 4 | 0 | Backfill to Grade: Backfill | -275.0635 | 61.9291 | 50.3793 | -109.5040 | -57.2710 | -160.5968 |
| 4 | 0 | Backfill to Grade: Backfill | -267.1914 | 77.1622 | 50.4523 | -107.0420 | -58.0515 | -199.3271 |
| 4 | 0 | Pave: Pave: Creep | -275.0635 | 56.4548 | 50.3774 | -109.0793 | -56.9608 | -131.4597 |
| 4 | 0 | Pave: Pave: Shrinkage | -275.0635 | 56.4548 | 50.3772 | -109.0793 | -56.9599 | -131.4597 |
| 4 | 0 | Pave: Pave: PT | -275.0635 | 56.4548 | 50.3772 | -109.0793 | -56.9599 | -131.4597 |
| 4 | 0 | Pave: Pave: Other PT | -275.1394 | 56.4595 | 50.3773 | -109.0797 | -56.9599 | -131.4697 |
| 4 | 0 | Pave: Pave: step 1 | -275.1734 | 56.4595 | 55.1755 | -109.0797 | -63.5563 | -131.4697 |
| 4 | 0 | Open Bridge to Traffic: | -275.1733 | 55.4867 | 55.1672 | -109.0045 | -62.5442 | -126.3411 |
| 4 | 0 | Open Bridge to Traffic: | -275.1733 | 55.4867 | 55.1670 | -109.0045 | -62.5434 | -126.3411 |
| 4 | 0 | Open Bridge to Traffic: | -275.1733 | 55.4867 | 55.1670 | -109.0045 | -62.5434 | -126.3411 |
| 4 | 0 | Open Bridge to Traffic: | -275.1571 | 55.4862 | 55.1671 | -109.0044 | -62.5434 | -126.3389 |

## RESULT : Member Sectional Forces

| Member | Station | Result Case | Force X (kips) | Force Y (kips) | Force Z (kips) | Moment X (kips-ft) | Moment Y (kips-ft) | Moment Z (kips-ft) |
|---|---|---|---|---|---|---|---|---|
| 4 | 0 | Open Bridge to Traffic: | -265.4746 | 74.5276 | 77.5499 | -105.9270 | -94.1648 | -174.7519 |
| 4 | 0 | Open Bridge to Traffic: | -267.4111 | 70.7193 | 73.0733 | -106.5425 | -87.8406 | -165.0693 |
| 4 | 0 | Partial Live Load for | -275.1570 | 54.8390 | 55.1638 | -108.9546 | -62.1546 | -122.9297 |
| 4 | 0 | Partial Live Load for | -275.1570 | 54.8390 | 55.1637 | -108.9546 | -62.1538 | -122.9297 |
| 4 | 0 | Partial Live Load for | -275.1570 | 54.8390 | 55.1637 | -108.9546 | -62.1538 | -122.9297 |
| 4 | 0 | Partial Live Load for | -275.1407 | 54.8384 | 55.1637 | -108.9545 | -62.1538 | -122.9275 |
| 4 | 0 | Partial Live Load for | -274.1725 | 56.7425 | 57.4020 | -108.6468 | -65.3159 | -127.7688 |
| 4 | 0 | Remove Long Term Live | -274.1702 | 22.9245 | 57.0763 | -106.0999 | -22.1677 | 49.8949 |
| 4 | 0 | Remove Long Term Live | -274.1701 | 22.9245 | 57.0683 | -106.0999 | -22.1329 | 49.8949 |
| 4 | 0 | Remove Long Term Live | -274.1701 | 22.9245 | 57.0683 | -106.0999 | -22.1329 | 49.8949 |
| 4 | 0 | Remove Long Term Live | -261.4648 | 22.3078 | 57.0702 | -106.0578 | -22.1403 | 51.5754 |
| 4 | 0 | Remove Long Term Live | -262.4331 | 20.4036 | 54.8319 | -106.3656 | -18.9781 | 56.4167 |
| 4 | 0 | Long Term Performance: | -262.4332 | 21.0035 | 54.8478 | -106.4104 | -19.8772 | 53.3840 |
| 4 | 0 | Long Term Performance: | -262.4332 | 21.0035 | 54.8477 | -106.4104 | -19.8723 | 53.3840 |
| 4 | 0 | Long Term Performance: | -262.4332 | 21.0035 | 54.8477 | -106.4104 | -19.8723 | 53.3840 |
| 4 | 0 | Long Term Performance: | -261.7223 | 20.9690 | 54.8478 | -106.4080 | -19.8727 | 53.4770 |
| 4 | 0 | Long Term Performance: | -253.9763 | 36.2021 | 72.7541 | -103.9461 | -45.1698 | 14.7466 |
| 4 | 0 | Long Term Performance: | -252.0398 | 40.0104 | 77.2306 | -103.3306 | -51.4941 | 5.0640 |
| 4 | 0 | Long Term Performance: | -234.8385 | 33.5762 | 109.0604 | -102.8986 | -96.2963 | 22.1778 |
| 4 | 0 | Strength Check: Strength | -261.7223 | 20.9690 | 54.8478 | -106.4080 | -19.8729 | 53.4770 |
| 4 | 0 | Strength Check: Strength | -261.7223 | 20.9690 | 54.8478 | -106.4080 | -19.8729 | 53.4770 |
| 4 | 0 | Strength Check: Strength | -261.7223 | 20.9690 | 54.8478 | -106.4080 | -19.8729 | 53.4770 |
| 4 | 0 | Strength Check: Strength | -261.7223 | 20.9690 | 54.8478 | -106.4080 | -19.8729 | 53.4770 |
| 4 | 0 | Strength Check: Strength | 28.3135 | 5.7380 | 54.9775 | -105.4113 | -20.0082 | 92.5532 |
| 4 | 0 | Strength Check: Strength | -234.8385 | 33.5762 | 109.0604 | -102.8986 | -96.2965 | 22.1778 |
| 4 | 1 | Set Precast In Place: Set | 0.0000 | 0.0000 | 0.0000 | 0.0000 | 0.0000 | 0.0000 |
| 4 | 1 | Set Precast In Place: Set | -0.0986 | 0.0000 | 13.9292 | 0.0000 | -10.9180 | 0.0000 |
| 4 | 1 | Tension PT: Tension PT: | -0.0984 | 0.0000 | 13.9121 | 0.0000 | -6.9240 | 0.0000 |
| 4 | 1 | Tension PT: Tension PT: | -0.0984 | 0.0000 | 13.9116 | 0.0000 | -6.9205 | 0.0000 |
| 4 | 1 | Tension PT: Tension PT: | -0.0984 | 0.0000 | 13.9116 | 0.0000 | -6.9205 | 0.0000 |
| 4 | 1 | Tension PT: Tension PT: | -0.0984 | 0.0000 | 13.9116 | 0.0000 | -6.9205 | 0.0000 |
| 4 | 1 | Tension PT: Tension PT: | -303.1040 | 15.8935 | 13.7853 | -1.0433 | -6.8671 | -25.1952 |
| 4 | 1 | Add Superstructure: Add | -303.1040 | 15.8442 | 13.7829 | -1.0547 | -6.6377 | -25.1292 |
| 4 | 1 | Add Superstructure: Add | -303.1040 | 15.8442 | 13.7828 | -1.0547 | -6.6367 | -25.1292 |

## RESULT : Member Sectional Forces

| Member | Station | Result Case | Force X (kips) | Force Y (kips) | Force Z (kips) | Moment X (kips-ft) | Moment Y (kips-ft) | Moment Z (kips-ft) |
|---|---|---|---|---|---|---|---|---|
| 4 | 1 | Add Superstructure: Add | -303.1040 | 15.8442 | 13.7828 | -1.0547 | -6.6367 | -25.1292 |
| 4 | 1 | Add Superstructure: Add | -302.9343 | 15.8365 | 13.7828 | -1.0542 | -6.6369 | -25.1132 |
| 4 | 1 | Add Superstructure: Add | -303.1085 | 15.8365 | 38.3946 | -1.0542 | -22.6620 | -25.1132 |
| 4 | 1 | Backfill to Grade: Backfill | -303.1080 | 15.8055 | 38.3271 | -1.0636 | -13.1334 | -25.0724 |
| 4 | 1 | Backfill to Grade: Backfill | -303.1080 | 15.8055 | 38.3263 | -1.0636 | -13.1282 | -25.0724 |
| 4 | 1 | Backfill to Grade: Backfill | -303.1080 | 15.8055 | 38.3263 | -1.0636 | -13.1282 | -25.0724 |
| 4 | 1 | Backfill to Grade: Backfill | -302.9251 | 15.7984 | 38.3263 | -1.0631 | -13.1285 | -25.0547 |
| 4 | 1 | Backfill to Grade: Backfill | -274.2222 | 30.2783 | 38.2632 | -81.8247 | -12.9097 | -114.6734 |
| 4 | 1 | Backfill to Grade: Backfill | -266.3500 | 35.6952 | 38.3362 | -79.3627 | -13.6173 | -143.0745 |
| 4 | 1 | Pave: Pave: Creep | -274.2222 | 24.8040 | 38.2612 | -81.4000 | -12.6014 | -91.0108 |
| 4 | 1 | Pave: Pave: Shrinkage | -274.2221 | 24.8040 | 38.2611 | -81.4000 | -12.6007 | -91.0108 |
| 4 | 1 | Pave: Pave: PT | -274.2221 | 24.8040 | 38.2611 | -81.4000 | -12.6007 | -91.0108 |
| 4 | 1 | Pave: Pave: Other PT | -274.2977 | 24.8087 | 38.2612 | -81.4004 | -12.6006 | -91.0163 |
| 4 | 1 | Pave: Pave: step 1 | -274.3235 | 24.8087 | 41.9074 | -81.4004 | -14.9747 | -91.0163 |
| 4 | 1 | Open Bridge to Traffic: | -274.3234 | 23.8360 | 41.8990 | -81.3252 | -13.9710 | -86.8605 |
| 4 | 1 | Open Bridge to Traffic: | -274.3234 | 23.8360 | 41.8989 | -81.3252 | -13.9702 | -86.8605 |
| 4 | 1 | Open Bridge to Traffic: | -274.3234 | 23.8360 | 41.8989 | -81.3252 | -13.9702 | -86.8605 |
| 4 | 1 | Open Bridge to Traffic: | -274.3072 | 23.8354 | 41.8989 | -81.3251 | -13.9703 | -86.8589 |
| 4 | 1 | Open Bridge to Traffic: | -264.5869 | 30.6065 | 58.9298 | -78.2477 | -25.8843 | -122.3603 |
| 4 | 1 | Open Bridge to Traffic: | -266.5309 | 29.2522 | 55.5236 | -78.8632 | -23.5015 | -115.2600 |
| 4 | 1 | Partial Live Load for | -274.3072 | 23.1882 | 41.8957 | -81.2753 | -13.5846 | -84.0968 |
| 4 | 1 | Partial Live Load for | -274.3072 | 23.1882 | 41.8956 | -81.2753 | -13.5839 | -84.0968 |
| 4 | 1 | Partial Live Load for | -274.3072 | 23.1882 | 41.8956 | -81.2753 | -13.5839 | -84.0968 |
| 4 | 1 | Partial Live Load for | -274.2910 | 23.1876 | 41.8956 | -81.2752 | -13.5839 | -84.0952 |
| 4 | 1 | Partial Live Load for | -273.3189 | 23.8647 | 43.5987 | -80.9675 | -14.7754 | -87.6453 |
| 4 | 1 | Remove Long Term Live | -273.3166 | -9.9534 | 43.2730 | -78.4206 | 28.0472 | 56.1995 |
| 4 | 1 | Remove Long Term Live | -273.3166 | -9.9534 | 43.2650 | -78.4206 | 28.0739 | 56.1995 |
| 4 | 1 | Remove Long Term Live | -273.3166 | -9.9534 | 43.2650 | -78.4206 | 28.0739 | 56.1995 |
| 4 | 1 | Remove Long Term Live | -260.6275 | -10.5701 | 43.2667 | -78.3784 | 28.0675 | 57.2734 |
| 4 | 1 | Remove Long Term Live | -261.5995 | -11.2472 | 41.5637 | -78.6862 | 29.2589 | 60.8236 |
| 4 | 1 | Long Term Performance: | -261.5997 | -10.6473 | 41.5795 | -78.7310 | 28.3758 | 58.3908 |
| 4 | 1 | Long Term Performance: | -261.5997 | -10.6473 | 41.5795 | -78.7310 | 28.3806 | 58.3908 |
| 4 | 1 | Long Term Performance: | -261.5997 | -10.6473 | 41.5795 | -78.7310 | 28.3806 | 58.3908 |
| 4 | 1 | Long Term Performance: | -260.8875 | -10.6818 | 41.5796 | -78.7286 | 28.3804 | 58.4485 |

## RESULT : Member Sectional Forces

| Member | Station | Result Case | Force X (kips) | Force Y (kips) | Force Z (kips) | Moment X (kips-ft) | Moment Y (kips-ft) | Moment Z (kips-ft) |
|---|---|---|---|---|---|---|---|---|
| 4 | 1 | Long Term Performance: | -253.1112 | -5.2649 | 55.2042 | -76.2667 | 18.8491 | 30.0473 |
| 4 | 1 | Long Term Performance: | -251.1671 | -3.9107 | 58.6104 | -75.6512 | 16.4663 | 22.9471 |
| 4 | 1 | Long Term Performance: | -233.9119 | -10.3449 | 82.8198 | -75.2193 | -0.3155 | 33.6264 |
| 4 | 1 | Strength Check: Strength | -260.8875 | -10.6818 | 41.5796 | -78.7286 | 28.3801 | 58.4485 |
| 4 | 1 | Strength Check: Strength | -260.8875 | -10.6818 | 41.5796 | -78.7286 | 28.3801 | 58.4485 |
| 4 | 1 | Strength Check: Strength | -260.8875 | -10.6818 | 41.5796 | -78.7286 | 28.3801 | 58.4485 |
| 4 | 1 | Strength Check: Strength | -260.8875 | -10.6818 | 41.5796 | -78.7286 | 28.3801 | 58.4485 |
| 4 | 1 | Strength Check: Strength | 28.4074 | -25.9128 | 41.7040 | -77.7306 | 28.3338 | 82.4806 |
| 4 | 1 | Strength Check: Strength | -233.9119 | -10.3449 | 82.8198 | -75.2192 | -0.3158 | 33.6265 |
| 4 | 2 | Set Precast In Place: Set | 0.0000 | 0.0000 | 0.0000 | 0.0000 | 0.0000 | 0.0000 |
| 4 | 2 | Set Precast In Place: Set | -0.0678 | 0.0000 | 9.5837 | 0.0000 | 0.8387 | 0.0000 |
| 4 | 2 | Tension PT: Tension PT: | -0.0677 | 0.0000 | 9.5666 | 0.0000 | 4.8157 | 0.0000 |
| 4 | 2 | Tension PT: Tension PT: | -0.0677 | 0.0000 | 9.5661 | 0.0000 | 4.8186 | 0.0000 |
| 4 | 2 | Tension PT: Tension PT: | -0.0677 | 0.0000 | 9.5661 | 0.0000 | 4.8186 | 0.0000 |
| 4 | 2 | Tension PT: Tension PT: | -0.0677 | 0.0000 | 9.5661 | 0.0000 | 4.8186 | 0.0000 |
| 4 | 2 | Tension PT: Tension PT: | -302.4643 | 15.8935 | 9.4441 | -1.0460 | 4.7835 | -9.6868 |
| 4 | 2 | Add Superstructure: Add | -302.4643 | 15.8442 | 9.4417 | -1.0574 | 5.0106 | -9.6702 |
| 4 | 2 | Add Superstructure: Add | -302.4643 | 15.8442 | 9.4416 | -1.0574 | 5.0114 | -9.6702 |
| 4 | 2 | Add Superstructure: Add | -302.4643 | 15.8442 | 9.4416 | -1.0574 | 5.0114 | -9.6702 |
| 4 | 2 | Add Superstructure: Add | -302.2924 | 15.8365 | 9.4416 | -1.0569 | 5.0114 | -9.6632 |
| 4 | 2 | Add Superstructure: Add | -302.4115 | 15.8365 | 26.2775 | -1.0569 | 9.7106 | -9.6632 |
| 4 | 2 | Backfill to Grade: Backfill | -302.4111 | 15.8055 | 26.2100 | -1.0663 | 19.1717 | -9.6534 |
| 4 | 2 | Backfill to Grade: Backfill | -302.4110 | 15.8055 | 26.2092 | -1.0663 | 19.1762 | -9.6534 |
| 4 | 2 | Backfill to Grade: Backfill | -302.4110 | 15.8055 | 26.2092 | -1.0663 | 19.1762 | -9.6534 |
| 4 | 2 | Backfill to Grade: Backfill | -302.2243 | 15.7984 | 26.2092 | -1.0658 | 19.1761 | -9.6453 |
| 4 | 2 | Backfill to Grade: Backfill | -273.5214 | -1.5525 | 26.1461 | -54.1468 | 19.3317 | -100.6844 |
| 4 | 2 | Backfill to Grade: Backfill | -265.6492 | -5.9998 | 26.2190 | -51.6848 | 18.6971 | -128.5968 |
| 4 | 2 | Pave: Pave: Creep | -273.5214 | -7.0268 | 26.1441 | -53.7221 | 19.6380 | -82.4963 |
| 4 | 2 | Pave: Pave: Shrinkage | -273.5214 | -7.0268 | 26.1440 | -53.7221 | 19.6387 | -82.4963 |
| 4 | 2 | Pave: Pave: PT | -273.5214 | -7.0268 | 26.1440 | -53.7221 | 19.6387 | -82.4963 |
| 4 | 2 | Pave: Pave: Other PT | -273.5962 | -7.0221 | 26.1441 | -53.7224 | 19.6388 | -82.4975 |
| 4 | 2 | Pave: Pave: step 1 | -273.6138 | -7.0221 | 28.6383 | -53.7224 | 20.3350 | -82.4975 |
| 4 | 2 | Open Bridge to Traffic: | -273.6138 | -7.9948 | 28.6299 | -53.6472 | 21.3304 | -79.3145 |
| 4 | 2 | Open Bridge to Traffic: | -273.6138 | -7.9948 | 28.6298 | -53.6472 | 21.3310 | -79.3145 |

## RESULT : Member Sectional Forces

| Member | Station | Result Case | Force X (kips) | Force Y (kips) | Force Z (kips) | Moment X (kips-ft) | Moment Y (kips-ft) | Moment Z (kips-ft) |
|---|---|---|---|---|---|---|---|---|
| 4 | 2 | Open Bridge to Traffic: | -273.6138 | -7.9948 | 28.6298 | -53.6472 | 21.3310 | -79.3145 |
| 4 | 2 | Open Bridge to Traffic: | -273.5972 | -7.9954 | 28.6298 | -53.6472 | 21.3310 | -79.3137 |
| 4 | 2 | Open Bridge to Traffic: | -263.8389 | -13.5546 | 40.3087 | -50.5698 | 23.7722 | -114.2041 |
| 4 | 2 | Open Bridge to Traffic: | -265.7906 | -12.4428 | 37.9729 | -51.1852 | 23.2840 | -107.2260 |
| 4 | 2 | Partial Live Load for | -273.5971 | -8.6426 | 28.6266 | -53.5973 | 21.7135 | -77.1989 |
| 4 | 2 | Partial Live Load for | -273.5971 | -8.6426 | 28.6265 | -53.5973 | 21.7141 | -77.1989 |
| 4 | 2 | Partial Live Load for | -273.5971 | -8.6426 | 28.6265 | -53.5973 | 21.7141 | -77.1989 |
| 4 | 2 | Partial Live Load for | -273.5804 | -8.6432 | 28.6265 | -53.5973 | 21.7141 | -77.1981 |
| 4 | 2 | Partial Live Load for | -272.6046 | -9.1991 | 29.7944 | -53.2896 | 21.9582 | -80.6871 |
| 4 | 2 | Remove Long Term Live | -272.6023 | -43.0172 | 29.4687 | -50.7427 | 64.4550 | 29.3387 |
| 4 | 2 | Remove Long Term Live | -272.6023 | -43.0172 | 29.4607 | -50.7427 | 64.4737 | 29.3387 |
| 4 | 2 | Remove Long Term Live | -272.6023 | -43.0172 | 29.4607 | -50.7427 | 64.4737 | 29.3387 |
| 4 | 2 | Remove Long Term Live | -259.8747 | -43.6339 | 29.4627 | -50.7007 | 64.4715 | 29.7719 |
| 4 | 2 | Remove Long Term Live | -260.8505 | -43.0780 | 28.2948 | -51.0084 | 64.2274 | 33.2610 |
| 4 | 2 | Long Term Performance: | -260.8506 | -42.4781 | 28.3107 | -51.0533 | 63.3601 | 31.4281 |
| 4 | 2 | Long Term Performance: | -260.8506 | -42.4781 | 28.3106 | -51.0533 | 63.3648 | 31.4281 |
| 4 | 2 | Long Term Performance: | -260.8506 | -42.4781 | 28.3106 | -51.0533 | 63.3648 | 31.4281 |
| 4 | 2 | Long Term Performance: | -260.1380 | -42.5125 | 28.3107 | -51.0509 | 63.3647 | 31.4510 |
| 4 | 2 | Long Term Performance: | -252.3315 | -46.9599 | 37.6538 | -48.5889 | 65.3176 | 3.5386 |
| 4 | 2 | Long Term Performance: | -250.3798 | -48.0718 | 39.9896 | -47.9734 | 65.8058 | -3.4395 |
| 4 | 2 | Long Term Performance: | -233.0707 | -54.5060 | 56.5786 | -47.5415 | 69.4238 | 0.8056 |
| 4 | 2 | Strength Check: Strength | -260.1380 | -42.5126 | 28.3107 | -51.0509 | 63.3645 | 31.4510 |
| 4 | 2 | Strength Check: Strength | -260.1380 | -42.5126 | 28.3107 | -51.0509 | 63.3645 | 31.4510 |
| 4 | 2 | Strength Check: Strength | -260.1380 | -42.5126 | 28.3107 | -51.0509 | 63.3645 | 31.4510 |
| 4 | 2 | Strength Check: Strength | -260.1380 | -42.5126 | 28.3107 | -51.0509 | 63.3645 | 31.4510 |
| 4 | 2 | Strength Check: Strength | 28.5013 | -57.7436 | 28.4305 | -50.0499 | 63.4019 | 40.6663 |
| 4 | 2 | Strength Check: Strength | -233.0706 | -54.5060 | 56.5786 | -47.5415 | 69.4236 | 0.8056 |
| 5 | 0 | Set Precast In Place: Set | 0.0000 | 0.0000 | 0.0000 | 0.0000 | 0.0000 | 0.0000 |
| 5 | 0 | Set Precast In Place: Set | -0.0678 | 0.0000 | 9.5837 | 0.0000 | 0.8387 | 0.0000 |
| 5 | 0 | Tension PT: Tension PT: | -0.0677 | 0.0000 | 9.5666 | 0.0000 | 4.8157 | 0.0000 |
| 5 | 0 | Tension PT: Tension PT: | -0.0677 | 0.0000 | 9.5661 | 0.0000 | 4.8186 | 0.0000 |
| 5 | 0 | Tension PT: Tension PT: | -0.0677 | 0.0000 | 9.5661 | 0.0000 | 4.8186 | 0.0000 |
| 5 | 0 | Tension PT: Tension PT: | -0.0677 | 0.0000 | 9.5661 | 0.0000 | 4.8186 | 0.0000 |
| 5 | 0 | Tension PT: Tension PT: | -302.4643 | 2.3988 | 9.4441 | 0.2390 | 4.7835 | -9.6959 |

## RESULT : Member Sectional Forces

| Member | Station | Result Case | Force X (kips) | Force Y (kips) | Force Z (kips) | Moment X (kips-ft) | Moment Y (kips-ft) | Moment Z (kips-ft) |
|---|---|---|---|---|---|---|---|---|
| 5 | 0 | Add Superstructure: Add | -302.4643 | 2.3882 | 9.4417 | 0.2240 | 5.0106 | -9.6792 |
| 5 | 0 | Add Superstructure: Add | -302.4643 | 2.3882 | 9.4416 | 0.2240 | 5.0114 | -9.6792 |
| 5 | 0 | Add Superstructure: Add | -302.4643 | 2.3882 | 9.4416 | 0.2240 | 5.0114 | -9.6792 |
| 5 | 0 | Add Superstructure: Add | -302.2924 | 2.3869 | 9.4416 | 0.2239 | 5.0114 | -9.6723 |
| 5 | 0 | Add Superstructure: Add | -302.4115 | 2.3869 | 26.2775 | 0.2239 | 9.7106 | -9.6723 |
| 5 | 0 | Backfill to Grade: Backfill | -302.4111 | 2.3804 | 26.2100 | 0.2121 | 19.1717 | -9.6624 |
| 5 | 0 | Backfill to Grade: Backfill | -302.4110 | 2.3804 | 26.2092 | 0.2121 | 19.1762 | -9.6624 |
| 5 | 0 | Backfill to Grade: Backfill | -302.4110 | 2.3804 | 26.2092 | 0.2121 | 19.1762 | -9.6624 |
| 5 | 0 | Backfill to Grade: Backfill | -302.2243 | 2.3792 | 26.2092 | 0.2120 | 19.1761 | -9.6543 |
| 5 | 0 | Backfill to Grade: Backfill | -273.5214 | 100.6888 | 26.1461 | -63.8829 | 19.3317 | -100.6155 |
| 5 | 0 | Backfill to Grade: Backfill | -265.6492 | 131.0267 | 26.2190 | -64.7335 | 18.6971 | -128.5044 |
| 5 | 0 | Pave: Pave: Creep | -273.5214 | 100.9093 | 26.1441 | -64.0005 | 19.6380 | -82.4235 |
| 5 | 0 | Pave: Pave: Shrinkage | -273.5214 | 100.9093 | 26.1440 | -64.0005 | 19.6387 | -82.4235 |
| 5 | 0 | Pave: Pave: PT | -273.5214 | 100.9093 | 26.1440 | -64.0005 | 19.6387 | -82.4235 |
| 5 | 0 | Pave: Pave: Other PT | -273.5962 | 100.9090 | 26.1441 | -64.0004 | 19.6388 | -82.4248 |
| 5 | 0 | Pave: Pave: step 1 | -273.6138 | 100.9090 | 28.6383 | -64.0004 | 20.3350 | -82.4248 |
| 5 | 0 | Open Bridge to Traffic: | -273.6138 | 100.9446 | 28.6299 | -64.0213 | 21.3304 | -79.2411 |
| 5 | 0 | Open Bridge to Traffic: | -273.6138 | 100.9446 | 28.6298 | -64.0213 | 21.3310 | -79.2411 |
| 5 | 0 | Open Bridge to Traffic: | -273.6138 | 100.9446 | 28.6298 | -64.0213 | 21.3310 | -79.2411 |
| 5 | 0 | Open Bridge to Traffic: | -273.5972 | 100.9445 | 28.6298 | -64.0213 | 21.3310 | -79.2403 |
| 5 | 0 | Open Bridge to Traffic: | -263.8389 | 138.8669 | 40.3087 | -65.0845 | 23.7722 | -114.1014 |
| 5 | 0 | Open Bridge to Traffic: | -265.7906 | 131.2824 | 37.9729 | -64.8718 | 23.2840 | -107.1292 |
| 5 | 0 | Partial Live Load for | -273.5971 | 100.9680 | 28.6266 | -64.0353 | 21.7135 | -77.1250 |
| 5 | 0 | Partial Live Load for | -273.5971 | 100.9680 | 28.6265 | -64.0353 | 21.7141 | -77.1250 |
| 5 | 0 | Partial Live Load for | -273.5971 | 100.9680 | 28.6265 | -64.0353 | 21.7141 | -77.1250 |
| 5 | 0 | Partial Live Load for | -273.5804 | 100.9678 | 28.6265 | -64.0353 | 21.7141 | -77.1242 |
| 5 | 0 | Partial Live Load for | -272.6046 | 104.7601 | 29.7944 | -64.1416 | 21.9582 | -80.6103 |
| 5 | 0 | Remove Long Term Live | -272.6023 | 105.9983 | 29.4687 | -64.9330 | 64.4550 | 29.4392 |
| 5 | 0 | Remove Long Term Live | -272.6023 | 105.9983 | 29.4607 | -64.9330 | 64.4737 | 29.4392 |
| 5 | 0 | Remove Long Term Live | -272.6023 | 105.9983 | 29.4607 | -64.9330 | 64.4737 | 29.4392 |
| 5 | 0 | Remove Long Term Live | -259.8747 | 105.9161 | 29.4627 | -64.9419 | 64.4715 | 29.8727 |
| 5 | 0 | Remove Long Term Live | -260.8505 | 102.1239 | 28.2948 | -64.8356 | 64.2274 | 33.3588 |
| 5 | 0 | Long Term Performance: | -260.8506 | 102.1017 | 28.3107 | -64.8212 | 63.3601 | 31.5255 |
| 5 | 0 | Long Term Performance: | -260.8506 | 102.1017 | 28.3106 | -64.8212 | 63.3648 | 31.5255 |

## RESULT : Member Sectional Forces

| Member | Station | Result Case | Force X (kips) | Force Y (kips) | Force Z (kips) | Moment X (kips-ft) | Moment Y (kips-ft) | Moment Z (kips-ft) |
|---|---|---|---|---|---|---|---|---|
| 5 | 0 | Long Term Performance: | -260.8506 | 102.1017 | 28.3106 | -64.8212 | 63.3648 | 31.5255 |
| 5 | 0 | Long Term Performance: | -260.1380 | 102.0974 | 28.3107 | -64.8217 | 63.3647 | 31.5484 |
| 5 | 0 | Long Term Performance: | -252.3315 | 132.4353 | 37.6538 | -65.6723 | 65.3176 | 3.6595 |
| 5 | 0 | Long Term Performance: | -250.3798 | 140.0198 | 39.9896 | -65.8849 | 65.8058 | -3.3127 |
| 5 | 0 | Long Term Performance: | -233.0707 | 139.1188 | 56.5786 | -65.9799 | 69.4238 | 0.9360 |
| 5 | 0 | Strength Check: Strength | -260.1380 | 102.0974 | 28.3107 | -64.8217 | 63.3645 | 31.5484 |
| 5 | 0 | Strength Check: Strength | -260.1380 | 102.0974 | 28.3107 | -64.8217 | 63.3645 | 31.5484 |
| 5 | 0 | Strength Check: Strength | -260.1380 | 102.0974 | 28.3107 | -64.8217 | 63.3645 | 31.5484 |
| 5 | 0 | Strength Check: Strength | -260.1380 | 102.0974 | 28.3107 | -64.8217 | 63.3645 | 31.5484 |
| 5 | 0 | Strength Check: Strength | 28.5013 | 99.7882 | 28.4305 | -65.0512 | 63.4019 | 40.7725 |
| 5 | 0 | Strength Check: Strength | -233.0706 | 139.1188 | 56.5786 | -65.9799 | 69.4236 | 0.9360 |
| 5 | 1 | Set Precast In Place: Set | 0.0000 | 0.0000 | 0.0000 | 0.0000 | 0.0000 | 0.0000 |
| 5 | 1 | Set Precast In Place: Set | 0.0307 | 0.0000 | -4.3346 | 0.0000 | 9.1856 | 0.0000 |
| 5 | 1 | Tension PT: Tension PT: | 0.0308 | 0.0000 | -4.3517 | 0.0000 | 13.1082 | 0.0000 |
| 5 | 1 | Tension PT: Tension PT: | 0.0308 | 0.0000 | -4.3522 | 0.0000 | 13.1095 | 0.0000 |
| 5 | 1 | Tension PT: Tension PT: | 0.0308 | 0.0000 | -4.3522 | 0.0000 | 13.1095 | 0.0000 |
| 5 | 1 | Tension PT: Tension PT: | 0.0308 | 0.0000 | -4.3522 | 0.0000 | 13.1095 | 0.0000 |
| 5 | 1 | Tension PT: Tension PT: | -299.9182 | 2.3988 | -4.4568 | 0.2281 | 12.8933 | -3.6168 |
| 5 | 1 | Add Superstructure: Add | -299.9182 | 2.3882 | -4.4592 | 0.2130 | 13.1129 | -3.6338 |
| 5 | 1 | Add Superstructure: Add | -299.9182 | 2.3882 | -4.4594 | 0.2130 | 13.1133 | -3.6338 |
| 5 | 1 | Add Superstructure: Add | -299.9182 | 2.3882 | -4.4594 | 0.2130 | 13.1133 | -3.6338 |
| 5 | 1 | Add Superstructure: Add | -299.7440 | 2.3869 | -4.4593 | 0.2129 | 13.1135 | -3.6323 |
| 5 | 1 | Add Superstructure: Add | -299.6882 | 2.3869 | -12.3527 | 0.2129 | 32.0325 | -3.6323 |
| 5 | 1 | Backfill to Grade: Backfill | -299.6877 | 2.3804 | -12.4202 | 0.2011 | 41.2789 | -3.6431 |
| 5 | 1 | Backfill to Grade: Backfill | -299.6877 | 2.3804 | -12.4210 | 0.2011 | 41.2809 | -3.6431 |
| 5 | 1 | Backfill to Grade: Backfill | -299.6877 | 2.3804 | -12.4210 | 0.2011 | 41.2809 | -3.6431 |
| 5 | 1 | Backfill to Grade: Backfill | -299.4972 | 2.3792 | -12.4210 | 0.2011 | 41.2811 | -3.6412 |
| 5 | 1 | Backfill to Grade: Backfill | -270.7942 | -1.3028 | -12.4841 | 25.6310 | 41.2360 | 56.1215 |
| 5 | 1 | Backfill to Grade: Backfill | -262.9221 | -2.4878 | -12.4111 | 24.7804 | 40.8336 | 74.6301 |
| 5 | 1 | Pave: Pave: Creep | -270.7942 | -1.0823 | -12.4860 | 25.5133 | 41.5361 | 75.0148 |
| 5 | 1 | Pave: Pave: Shrinkage | -270.7942 | -1.0823 | -12.4861 | 25.5133 | 41.5364 | 75.0148 |
| 5 | 1 | Pave: Pave: PT | -270.7942 | -1.0823 | -12.4861 | 25.5133 | 41.5364 | 75.0148 |
| 5 | 1 | Pave: Pave: Other PT | -270.8683 | -1.0826 | -12.4861 | 25.5134 | 41.5369 | 75.0122 |
| 5 | 1 | Pave: Pave: step 1 | -270.8600 | -1.0826 | -13.6555 | 25.5134 | 44.3397 | 75.0122 |

## RESULT : Member Sectional Forces

| Member | Station | Result Case | Force X (kips) | Force Y (kips) | Force Z (kips) | Moment X (kips-ft) | Moment Y (kips-ft) | Moment Z (kips-ft) |
|---|---|---|---|---|---|---|---|---|
| 5 | 1 | Open Bridge to Traffic: | -270.8600 | -1.0469 | -13.6638 | 25.4926 | 45.3085 | 78.3092 |
| 5 | 1 | Open Bridge to Traffic: | -270.8600 | -1.0469 | -13.6639 | 25.4926 | 45.3088 | 78.3092 |
| 5 | 1 | Open Bridge to Traffic: | -270.8600 | -1.0469 | -13.6639 | 25.4926 | 45.3088 | 78.3092 |
| 5 | 1 | Open Bridge to Traffic: | -270.8430 | -1.0471 | -13.6639 | 25.4926 | 45.3088 | 78.3094 |
| 5 | 1 | Open Bridge to Traffic: | -260.9643 | -2.5284 | -19.0055 | 24.4294 | 57.8272 | 101.4452 |
| 5 | 1 | Open Bridge to Traffic: | -262.9400 | -2.2321 | -17.9372 | 24.6421 | 55.3235 | 96.8180 |
| 5 | 1 | Partial Live Load for | -270.8429 | -1.0236 | -13.6671 | 25.4786 | 45.6810 | 80.4992 |
| 5 | 1 | Partial Live Load for | -270.8429 | -1.0236 | -13.6672 | 25.4786 | 45.6813 | 80.4992 |
| 5 | 1 | Partial Live Load for | -270.8429 | -1.0236 | -13.6672 | 25.4786 | 45.6813 | 80.4992 |
| 5 | 1 | Partial Live Load for | -270.8258 | -1.0237 | -13.6672 | 25.4786 | 45.6813 | 80.4993 |
| 5 | 1 | Partial Live Load for | -269.8379 | -1.1719 | -14.2014 | 25.3723 | 46.9332 | 82.8129 |
| 5 | 1 | Remove Long Term Live | -269.8356 | 0.0664 | -14.5271 | 24.5808 | 88.3942 | 196.8003 |
| 5 | 1 | Remove Long Term Live | -269.8356 | 0.0664 | -14.5351 | 24.5808 | 88.3874 | 196.8003 |
| 5 | 1 | Remove Long Term Live | -269.8356 | 0.0664 | -14.5351 | 24.5808 | 88.3874 | 196.8003 |
| 5 | 1 | Remove Long Term Live | -257.0694 | -0.0158 | -14.5328 | 24.5718 | 88.3948 | 196.9483 |
| 5 | 1 | Remove Long Term Live | -258.0573 | 0.1323 | -13.9987 | 24.6781 | 87.1430 | 194.6348 |
| 5 | 1 | Long Term Performance: | -258.0574 | 0.1102 | -13.9828 | 24.6925 | 86.3262 | 192.7310 |
| 5 | 1 | Long Term Performance: | -258.0574 | 0.1102 | -13.9829 | 24.6925 | 86.3307 | 192.7310 |
| 5 | 1 | Long Term Performance: | -258.0574 | 0.1102 | -13.9829 | 24.6925 | 86.3307 | 192.7310 |
| 5 | 1 | Long Term Performance: | -257.3444 | 0.1058 | -13.9827 | 24.6920 | 86.3309 | 192.7400 |
| 5 | 1 | Long Term Performance: | -249.4415 | -1.0792 | -18.2560 | 23.8414 | 96.3456 | 211.2486 |
| 5 | 1 | Long Term Performance: | -247.4657 | -1.3755 | -19.3243 | 23.6288 | 98.8493 | 215.8758 |
| 5 | 1 | Long Term Performance: | -229.9850 | -2.2765 | -26.9943 | 23.5338 | 116.6499 | 217.2591 |
| 5 | 1 | Strength Check: Strength | -257.3444 | 0.1058 | -13.9827 | 24.6920 | 86.3307 | 192.7400 |
| 5 | 1 | Strength Check: Strength | -257.3444 | 0.1058 | -13.9827 | 24.6920 | 86.3307 | 192.7400 |
| 5 | 1 | Strength Check: Strength | -257.3444 | 0.1058 | -13.9827 | 24.6920 | 86.3307 | 192.7400 |
| 5 | 1 | Strength Check: Strength | -257.3443 | 0.1058 | -13.9827 | 24.6920 | 86.3307 | 192.7400 |
| 5 | 1 | Strength Check: Strength | 28.8007 | -2.2034 | -13.8806 | 24.4737 | 86.5383 | 196.1988 |
| 5 | 1 | Strength Check: Strength | -229.9849 | -2.2765 | -26.9942 | 23.5338 | 116.6496 | 217.2591 |
| 5 | 2 | Set Precast In Place: Set | 0.0000 | 0.0000 | 0.0000 | 0.0000 | 0.0000 | 0.0000 |
| 5 | 2 | Set Precast In Place: Set | 0.1292 | 0.0000 | -18.2528 | 0.0000 | -26.7316 | 0.0000 |
| 5 | 2 | Tension PT: Tension PT: | 0.1293 | 0.0000 | -18.2699 | 0.0000 | -22.8633 | 0.0000 |
| 5 | 2 | Tension PT: Tension PT: | 0.1293 | 0.0000 | -18.2704 | 0.0000 | -22.8636 | 0.0000 |
| 5 | 2 | Tension PT: Tension PT: | 0.1293 | 0.0000 | -18.2704 | 0.0000 | -22.8636 | 0.0000 |

## RESULT : Member Sectional Forces

| Member | Station | Result Case | Force X (kips) | Force Y (kips) | Force Z (kips) | Moment X (kips-ft) | Moment Y (kips-ft) | Moment Z (kips-ft) |
|---|---|---|---|---|---|---|---|---|
| 5 | 2 | Tension PT: Tension PT: | 0.1293 | 0.0000 | -18.2704 | 0.0000 | -22.8636 | 0.0000 |
| 5 | 2 | Tension PT: Tension PT: | -297.3529 | 2.3988 | -18.3576 | 0.2170 | -23.1486 | 2.4500 |
| 5 | 2 | Add Superstructure: Add | -297.3529 | 2.3882 | -18.3600 | 0.2020 | -22.9365 | 2.3993 |
| 5 | 2 | Add Superstructure: Add | -297.3529 | 2.3882 | -18.3602 | 0.2020 | -22.9366 | 2.3993 |
| 5 | 2 | Add Superstructure: Add | -297.3529 | 2.3882 | -18.3602 | 0.2020 | -22.9366 | 2.3993 |
| 5 | 2 | Add Superstructure: Add | -297.1810 | 2.3869 | -18.3601 | 0.2019 | -22.9366 | 2.3982 |
| 5 | 2 | Add Superstructure: Add | -296.9502 | 2.3869 | -50.9828 | 0.2019 | -68.4436 | 2.3982 |
| 5 | 2 | Backfill to Grade: Backfill | -296.9497 | 2.3804 | -51.0503 | 0.1901 | -59.4119 | 2.3668 |
| 5 | 2 | Backfill to Grade: Backfill | -296.9497 | 2.3804 | -51.0510 | 0.1901 | -59.4123 | 2.3668 |
| 5 | 2 | Backfill to Grade: Backfill | -296.9497 | 2.3804 | -51.0510 | 0.1901 | -59.4123 | 2.3668 |
| 5 | 2 | Backfill to Grade: Backfill | -296.7608 | 2.3792 | -51.0510 | 0.1900 | -59.4123 | 2.3658 |
| 5 | 2 | Backfill to Grade: Backfill | -268.0579 | -104.2485 | -51.1141 | 115.1448 | -59.6581 | -113.0264 |
| 5 | 2 | Backfill to Grade: Backfill | -260.1857 | -137.1091 | -51.0412 | 114.2942 | -59.8285 | -148.6147 |
| 5 | 2 | Pave: Pave: Creep | -268.0578 | -104.0279 | -51.1161 | 115.0272 | -59.3642 | -93.4317 |
| 5 | 2 | Pave: Pave: Shrinkage | -268.0578 | -104.0279 | -51.1162 | 115.0272 | -59.3643 | -93.4317 |
| 5 | 2 | Pave: Pave: PT | -268.0578 | -104.0279 | -51.1162 | 115.0272 | -59.3643 | -93.4317 |
| 5 | 2 | Pave: Pave: Other PT | -268.1375 | -104.0282 | -51.1162 | 115.0273 | -59.3642 | -93.4318 |
| 5 | 2 | Pave: Pave: step 1 | -268.1033 | -104.0282 | -55.9492 | 115.0273 | -66.1060 | -93.4318 |
| 5 | 2 | Open Bridge to Traffic: | -268.1032 | -103.9926 | -55.9575 | 115.0065 | -65.1637 | -90.0214 |
| 5 | 2 | Open Bridge to Traffic: | -268.1032 | -103.9926 | -55.9576 | 115.0065 | -65.1638 | -90.0214 |
| 5 | 2 | Open Bridge to Traffic: | -268.1032 | -103.9926 | -55.9576 | 115.0065 | -65.1638 | -90.0214 |
| 5 | 2 | Open Bridge to Traffic: | -268.0866 | -103.9927 | -55.9576 | 115.0065 | -65.1638 | -90.0215 |
| 5 | 2 | Open Bridge to Traffic: | -258.0875 | -145.0685 | -78.3196 | 113.9433 | -96.6980 | -134.5068 |
| 5 | 2 | Open Bridge to Traffic: | -260.0873 | -136.8533 | -73.8472 | 114.1559 | -90.3911 | -125.6097 |
| 5 | 2 | Partial Live Load for | -268.0865 | -103.9693 | -55.9608 | 114.9925 | -64.8018 | -87.7571 |
| 5 | 2 | Partial Live Load for | -268.0865 | -103.9693 | -55.9609 | 114.9925 | -64.8018 | -87.7571 |
| 5 | 2 | Partial Live Load for | -268.0865 | -103.9693 | -55.9609 | 114.9925 | -64.8018 | -87.7571 |
| 5 | 2 | Partial Live Load for | -268.0697 | -103.9694 | -55.9609 | 114.9925 | -64.8018 | -87.7572 |
| 5 | 2 | Partial Live Load for | -267.0698 | -108.0770 | -58.1971 | 114.8861 | -67.9553 | -92.2057 |
| 5 | 2 | Remove Long Term Live | -267.0675 | -106.8387 | -58.5228 | 114.0947 | -27.5300 | 25.7197 |
| 5 | 2 | Remove Long Term Live | -267.0674 | -106.8387 | -58.5309 | 114.0947 | -27.5624 | 25.7197 |
| 5 | 2 | Remove Long Term Live | -267.0674 | -106.8387 | -58.5309 | 114.0947 | -27.5624 | 25.7197 |
| 5 | 2 | Remove Long Term Live | -254.3311 | -106.9209 | -58.5288 | 114.0858 | -27.5508 | 25.6248 |
| 5 | 2 | Remove Long Term Live | -255.3310 | -102.8133 | -56.2926 | 114.1921 | -24.3973 | 30.0734 |

## RESULT : Member Sectional Forces

| Member | Station | Result Case | Force X (kips) | Force Y (kips) | Force Z (kips) | Moment X (kips-ft) | Moment Y (kips-ft) | Moment Z (kips-ft) |
|---|---|---|---|---|---|---|---|---|
| 5 | 2 | Long Term Performance: | -255.3311 | -102.8355 | -56.2767 | 114.2065 | -25.1637 | 28.0991 |
| 5 | 2 | Long Term Performance: | -255.3311 | -102.8355 | -56.2768 | 114.2065 | -25.1594 | 28.0991 |
| 5 | 2 | Long Term Performance: | -255.3311 | -102.8355 | -56.2768 | 114.2065 | -25.1594 | 28.0991 |
| 5 | 2 | Long Term Performance: | -254.6170 | -102.8398 | -56.2767 | 114.2060 | -25.1587 | 28.0937 |
| 5 | 2 | Long Term Performance: | -246.6177 | -135.7004 | -74.1663 | 113.3554 | -50.3861 | -7.4945 |
| 5 | 2 | Long Term Performance: | -244.6179 | -143.9156 | -78.6387 | 113.1428 | -56.6929 | -16.3915 |
| 5 | 2 | Long Term Performance: | -226.9655 | -144.8166 | -110.5676 | 113.0478 | -101.8601 | -17.8737 |
| 5 | 2 | Strength Check: Strength | -254.6170 | -102.8398 | -56.2767 | 114.2060 | -25.1589 | 28.0938 |
| 5 | 2 | Strength Check: Strength | -254.6170 | -102.8398 | -56.2767 | 114.2060 | -25.1589 | 28.0938 |
| 5 | 2 | Strength Check: Strength | -254.6170 | -102.8398 | -56.2767 | 114.2060 | -25.1589 | 28.0938 |
| 5 | 2 | Strength Check: Strength | -254.6169 | -102.8398 | -56.2767 | 114.2060 | -25.1589 | 28.0938 |
| 5 | 2 | Strength Check: Strength | 29.1001 | -105.1490 | -56.1917 | 113.9985 | -24.8865 | 25.7464 |
| 5 | 2 | Strength Check: Strength | -226.9654 | -144.8166 | -110.5676 | 113.0478 | -101.8603 | -17.8737 |
| 6 | 0 | Set Precast In Place: Set | 0.0000 | 0.0000 | 0.0000 | 0.0000 | 0.0000 | 0.0000 |
| 6 | 0 | Set Precast In Place: Set | -0.1166 | 0.0000 | 16.4803 | 0.0000 | -26.7316 | 0.0000 |
| 6 | 0 | Tension PT: Tension PT: | -0.1168 | 0.0000 | 16.5068 | 0.0000 | -22.8633 | 0.0000 |
| 6 | 0 | Tension PT: Tension PT: | -0.1168 | 0.0000 | 16.5062 | 0.0000 | -22.8636 | 0.0000 |
| 6 | 0 | Tension PT: Tension PT: | -0.1168 | 0.0000 | 16.5062 | 0.0000 | -22.8636 | 0.0000 |
| 6 | 0 | Tension PT: Tension PT: | -0.1168 | 0.0000 | 16.5062 | 0.0000 | -22.8636 | 0.0000 |
| 6 | 0 | Tension PT: Tension PT: | -297.5952 | -1.3159 | 15.8845 | -0.5982 | -23.1486 | 2.4558 |
| 6 | 0 | Add Superstructure: Add | -297.5952 | -1.3024 | 15.8871 | -0.6133 | -22.9365 | 2.4051 |
| 6 | 0 | Add Superstructure: Add | -297.5952 | -1.3024 | 15.8869 | -0.6133 | -22.9366 | 2.4051 |
| 6 | 0 | Add Superstructure: Add | -297.5952 | -1.3024 | 15.8869 | -0.6133 | -22.9366 | 2.4051 |
| 6 | 0 | Add Superstructure: Add | -297.4233 | -1.3021 | 15.8874 | -0.6131 | -22.9366 | 2.4039 |
| 6 | 0 | Add Superstructure: Add | -297.6476 | -1.3021 | 47.5823 | -0.6131 | -68.4436 | 2.4039 |
| 6 | 0 | Backfill to Grade: Backfill | -297.6479 | -1.2938 | 47.6282 | -0.6246 | -59.4119 | 2.3726 |
| 6 | 0 | Backfill to Grade: Backfill | -297.6479 | -1.2938 | 47.6274 | -0.6246 | -59.4123 | 2.3726 |
| 6 | 0 | Backfill to Grade: Backfill | -297.6479 | -1.2938 | 47.6274 | -0.6246 | -59.4123 | 2.3726 |
| 6 | 0 | Backfill to Grade: Backfill | -297.4590 | -1.2935 | 47.6280 | -0.6244 | -59.4123 | 2.3716 |
| 6 | 0 | Backfill to Grade: Backfill | -264.6057 | 108.8244 | 47.6663 | -115.2744 | -59.0760 | -111.3960 |
| 6 | 0 | Backfill to Grade: Backfill | -255.9140 | 142.7042 | 47.5493 | -113.3163 | -59.1316 | -147.0042 |
| 6 | 0 | Pave: Pave: Creep | -264.6057 | 108.7328 | 47.6683 | -114.9539 | -58.7821 | -91.8044 |
| 6 | 0 | Pave: Pave: Shrinkage | -264.6057 | 108.7328 | 47.6681 | -114.9539 | -58.7821 | -91.8044 |
| 6 | 0 | Pave: Pave: PT | -264.6057 | 108.7328 | 47.6681 | -114.9539 | -58.7821 | -91.8044 |

## RESULT : Member Sectional Forces

| Member | Station | | Result Case | Force X (kips) | Force Y (kips) | Force Z (kips) | Moment X (kips-ft) | Moment Y (kips-ft) | Moment Z (kips-ft) |
|---|---|---|---|---|---|---|---|---|---|
| 6 | 0 | Pave: Pave: Other PT | -264.6854 | 108.7318 | 47.6681 | -114.9541 | -58.7821 | -91.8045 | |
| 6 | 0 | Pave: Pave: step 1 | -264.7186 | 108.7318 | 52.3636 | -114.9541 | -65.5238 | -91.8045 | |
| 6 | 0 | Open Bridge to Traffic: | -264.7187 | 108.7187 | 52.3697 | -114.8953 | -64.5816 | -88.3946 | |
| 6 | 0 | Open Bridge to Traffic: | -264.7187 | 108.7187 | 52.3696 | -114.8953 | -64.5817 | -88.3946 | |
| 6 | 0 | Open Bridge to Traffic: | -264.7187 | 108.7187 | 52.3696 | -114.8953 | -64.5817 | -88.3946 | |
| 6 | 0 | Open Bridge to Traffic: | -264.7020 | 108.7187 | 52.3697 | -114.8953 | -64.5817 | -88.3948 | |
| 6 | 0 | Open Bridge to Traffic: | -253.9918 | 151.0684 | 74.0380 | -112.4476 | -95.9725 | -132.9049 | |
| 6 | 0 | Open Bridge to Traffic: | -256.1338 | 142.5985 | 69.7044 | -112.9371 | -89.6943 | -124.0029 | |
| 6 | 0 | Partial Live Load for | -264.7020 | 108.7103 | 52.3723 | -114.8562 | -64.2197 | -86.1307 | |
| 6 | 0 | Partial Live Load for | -264.7020 | 108.7103 | 52.3722 | -114.8562 | -64.2197 | -86.1307 | |
| 6 | 0 | Partial Live Load for | -264.7020 | 108.7103 | 52.3722 | -114.8562 | -64.2197 | -86.1307 | |
| 6 | 0 | Partial Live Load for | -264.6852 | 108.7103 | 52.3722 | -114.8561 | -64.2197 | -86.1308 | |
| 6 | 0 | Partial Live Load for | -263.6142 | 112.9453 | 54.5391 | -114.6114 | -67.3588 | -90.5819 | |
| 6 | 0 | Remove Long Term Live | -263.6161 | 112.4560 | 54.8121 | -112.6537 | -26.9335 | 27.3241 | |
| 6 | 0 | Remove Long Term Live | -263.6161 | 112.4560 | 54.8042 | -112.6537 | -26.9659 | 27.3241 | |
| 6 | 0 | Remove Long Term Live | -263.6161 | 112.4560 | 54.8042 | -112.6537 | -26.9659 | 27.3241 | |
| 6 | 0 | Remove Long Term Live | -250.8798 | 112.5262 | 54.8292 | -112.6278 | -26.9543 | 27.2290 | |
| 6 | 0 | Remove Long Term Live | -251.9508 | 108.2913 | 52.6624 | -112.8726 | -23.8152 | 31.6800 | |
| 6 | 0 | Long Term Performance: | -251.9508 | 108.3114 | 52.6559 | -112.9037 | -24.5815 | 29.7061 | |
| 6 | 0 | Long Term Performance: | -251.9508 | 108.3114 | 52.6558 | -112.9037 | -24.5773 | 29.7061 | |
| 6 | 0 | Long Term Performance: | -251.9508 | 108.3114 | 52.6558 | -112.9037 | -24.5773 | 29.7061 | |
| 6 | 0 | Long Term Performance: | -251.2367 | 108.3161 | 52.6570 | -112.9022 | -24.5766 | 29.7007 | |
| 6 | 0 | Long Term Performance: | -242.6685 | 142.1959 | 69.9917 | -110.9440 | -49.6892 | -5.9074 | |
| 6 | 0 | Long Term Performance: | -240.5265 | 150.6658 | 74.3254 | -110.4545 | -55.9674 | -14.8094 | |
| 6 | 0 | Long Term Performance: | -221.0969 | 152.1997 | 104.9816 | -109.8885 | -100.8233 | -16.2962 | |
| 6 | 0 | Strength Check: Strength | -251.2367 | 108.3161 | 52.6570 | -112.9022 | -24.5768 | 29.7007 | |
| 6 | 0 | Strength Check: Strength | -251.2367 | 108.3161 | 52.6570 | -112.9022 | -24.5768 | 29.7007 | |
| 6 | 0 | Strength Check: Strength | -251.2367 | 108.3161 | 52.6570 | -112.9022 | -24.5768 | 29.7007 | |
| 6 | 0 | Strength Check: Strength | -251.2366 | 108.3161 | 52.6570 | -112.9022 | -24.5768 | 29.7007 | |
| 6 | 0 | Strength Check: Strength | 32.4768 | 109.5575 | 53.2513 | -112.3318 | -24.3044 | 27.3479 | |
| 6 | 0 | Strength Check: Strength | -221.0969 | 152.1997 | 104.9816 | -109.8885 | -100.8234 | -16.2962 | |
| 6 | 1 | Set Precast In Place: Set | 0.0000 | 0.0000 | 0.0000 | 0.0000 | 0.0000 | 0.0000 | |
| 6 | 1 | Set Precast In Place: Set | -0.0175 | 0.0000 | 2.4724 | 0.0000 | 3.2776 | 0.0000 | |
| 6 | 1 | Tension PT: Tension PT: | -0.0177 | 0.0000 | 2.4989 | 0.0000 | 7.2295 | 0.0000 | |

## RESULT : Member Sectional Forces

| Member | Station | Result Case | Force X (kips) | Force Y (kips) | Force Z (kips) | Moment X (kips-ft) | Moment Y (kips-ft) | Moment Z (kips-ft) |
|---|---|---|---|---|---|---|---|---|
| 6 | 1 | Tension PT: Tension PT: | -0.0177 | 0.0000 | 2.4983 | 0.0000 | 7.2276 | 0.0000 |
| 6 | 1 | Tension PT: Tension PT: | -0.0177 | 0.0000 | 2.4983 | 0.0000 | 7.2276 | 0.0000 |
| 6 | 1 | Tension PT: Tension PT: | -0.0177 | 0.0000 | 2.4983 | 0.0000 | 7.2276 | 0.0000 |
| 6 | 1 | Tension PT: Tension PT: | -295.0100 | -1.3159 | 1.8942 | -0.6093 | 5.2957 | -3.2857 |
| 6 | 1 | Add Superstructure: Add | -295.0100 | -1.3024 | 1.8967 | -0.6244 | 5.5157 | -3.2937 |
| 6 | 1 | Add Superstructure: Add | -295.0100 | -1.3024 | 1.8966 | -0.6244 | 5.5151 | -3.2937 |
| 6 | 1 | Add Superstructure: Add | -295.0100 | -1.3024 | 1.8966 | -0.6244 | 5.5151 | -3.2937 |
| 6 | 1 | Add Superstructure: Add | -294.8403 | -1.3021 | 1.8971 | -0.6242 | 5.5166 | -3.2924 |
| 6 | 1 | Add Superstructure: Add | -294.8904 | -1.3021 | 8.9681 | -0.6242 | 21.3899 | -3.2924 |
| 6 | 1 | Backfill to Grade: Backfill | -294.8907 | -1.2938 | 9.0140 | -0.6358 | 30.5671 | -3.2974 |
| 6 | 1 | Backfill to Grade: Backfill | -294.8907 | -1.2938 | 9.0132 | -0.6358 | 30.5641 | -3.2974 |
| 6 | 1 | Backfill to Grade: Backfill | -294.8907 | -1.2938 | 9.0132 | -0.6358 | 30.5641 | -3.2974 |
| 6 | 1 | Backfill to Grade: Backfill | -294.7035 | -1.2935 | 9.0138 | -0.6355 | 30.5658 | -3.2964 |
| 6 | 1 | Backfill to Grade: Backfill | -261.8502 | 5.3674 | 9.0521 | -23.0704 | 31.0236 | 68.0900 |
| 6 | 1 | Backfill to Grade: Backfill | -253.1585 | 7.6305 | 8.9351 | -21.1122 | 30.5974 | 89.7092 |
| 6 | 1 | Pave: Pave: Creep | -261.8502 | 5.2758 | 9.0541 | -22.7499 | 31.3236 | 87.3916 |
| 6 | 1 | Pave: Pave: Shrinkage | -261.8502 | 5.2758 | 9.0539 | -22.7499 | 31.3231 | 87.3916 |
| 6 | 1 | Pave: Pave: PT | -261.8502 | 5.2758 | 9.0539 | -22.7499 | 31.3231 | 87.3916 |
| 6 | 1 | Pave: Pave: Other PT | -261.9354 | 5.2747 | 9.0538 | -22.7500 | 31.3223 | 87.3917 |
| 6 | 1 | Pave: Pave: step 1 | -261.9428 | 5.2747 | 10.1014 | -22.7500 | 33.6739 | 87.3917 |
| 6 | 1 | Open Bridge to Traffic: | -261.9429 | 5.2617 | 10.1075 | -22.6912 | 34.6355 | 90.7602 |
| 6 | 1 | Open Bridge to Traffic: | -261.9429 | 5.2617 | 10.1074 | -22.6912 | 34.6351 | 90.7602 |
| 6 | 1 | Open Bridge to Traffic: | -261.9429 | 5.2617 | 10.1074 | -22.6912 | 34.6351 | 90.7602 |
| 6 | 1 | Open Bridge to Traffic: | -261.9266 | 5.2617 | 10.1074 | -22.6912 | 34.6352 | 90.7603 |
| 6 | 1 | Open Bridge to Traffic: | -251.0964 | 8.0906 | 14.8279 | -20.2435 | 45.0275 | 117.7844 |
| 6 | 1 | Open Bridge to Traffic: | -253.2624 | 7.5248 | 13.8838 | -20.7331 | 42.9491 | 112.3796 |
| 6 | 1 | Partial Live Load for | -261.9266 | 5.2532 | 10.1101 | -22.6521 | 35.0055 | 92.9976 |
| 6 | 1 | Partial Live Load for | -261.9266 | 5.2532 | 10.1100 | -22.6521 | 35.0051 | 92.9976 |
| 6 | 1 | Partial Live Load for | -261.9266 | 5.2532 | 10.1100 | -22.6521 | 35.0051 | 92.9976 |
| 6 | 1 | Partial Live Load for | -261.9100 | 5.2532 | 10.1100 | -22.6521 | 35.0053 | 92.9977 |
| 6 | 1 | Partial Live Load for | -260.8270 | 5.5361 | 10.5821 | -22.4073 | 36.0445 | 95.7001 |
| 6 | 1 | Remove Long Term Live | -260.8290 | 5.0469 | 10.8551 | -20.4497 | 77.3345 | 212.0567 |
| 6 | 1 | Remove Long Term Live | -260.8289 | 5.0469 | 10.8472 | -20.4497 | 77.2769 | 212.0567 |
| 6 | 1 | Remove Long Term Live | -260.8289 | 5.0469 | 10.8472 | -20.4497 | 77.2769 | 212.0567 |

## RESULT : Member Sectional Forces

| Member | Station | Result Case | Force X (kips) | Force Y (kips) | Force Z (kips) | Moment X (kips-ft) | Moment Y (kips-ft) | Moment Z (kips-ft) |
|---|---|---|---|---|---|---|---|---|
| 6 | 1 | Remove Long Term Live | -248.1224 | 5.1171 | 10.8720 | -20.4236 | 77.3639 | 212.2026 |
| 6 | 1 | Remove Long Term Live | -249.2054 | 4.8342 | 10.3999 | -20.6684 | 76.3246 | 209.5002 |
| 6 | 1 | Long Term Performance: | -249.2054 | 4.8544 | 10.3935 | -20.6996 | 75.5380 | 207.5902 |
| 6 | 1 | Long Term Performance: | -249.2054 | 4.8544 | 10.3933 | -20.6996 | 75.5418 | 207.5902 |
| 6 | 1 | Long Term Performance: | -249.2054 | 4.8544 | 10.3933 | -20.6996 | 75.5418 | 207.5902 |
| 6 | 1 | Long Term Performance: | -248.4902 | 4.8591 | 10.3945 | -20.6980 | 75.5464 | 207.5989 |
| 6 | 1 | Long Term Performance: | -239.8261 | 7.1222 | 14.1709 | -18.7398 | 83.8603 | 229.2181 |
| 6 | 1 | Long Term Performance: | -237.6600 | 7.6880 | 15.1150 | -18.2503 | 85.9387 | 234.6230 |
| 6 | 1 | Long Term Performance: | -218.0593 | 9.2219 | 21.5784 | -17.6843 | 99.8568 | 237.9937 |
| 6 | 1 | Strength Check: Strength | -248.4902 | 4.8591 | 10.3946 | -20.6980 | 75.5462 | 207.5989 |
| 6 | 1 | Strength Check: Strength | -248.4902 | 4.8591 | 10.3946 | -20.6980 | 75.5462 | 207.5989 |
| 6 | 1 | Strength Check: Strength | -248.4902 | 4.8591 | 10.3946 | -20.6980 | 75.5462 | 207.5989 |
| 6 | 1 | Strength Check: Strength | -248.4902 | 4.8591 | 10.3946 | -20.6980 | 75.5462 | 207.5989 |
| 6 | 1 | Strength Check: Strength | 32.7759 | 6.1004 | 10.9715 | -20.1166 | 77.3838 | 210.7272 |
| 6 | 1 | Strength Check: Strength | -218.0593 | 9.2219 | 21.5784 | -17.6843 | 99.8566 | 237.9937 |
| 6 | 2 | Set Precast In Place: Set | 0.0000 | 0.0000 | 0.0000 | 0.0000 | 0.0000 | 0.0000 |
| 6 | 2 | Set Precast In Place: Set | 0.0816 | 0.0000 | -11.5355 | 0.0000 | -11.0725 | 0.0000 |
| 6 | 2 | Tension PT: Tension PT: | 0.0814 | 0.0000 | -11.5090 | 0.0000 | -7.0369 | 0.0000 |
| 6 | 2 | Tension PT: Tension PT: | 0.0814 | 0.0000 | -11.5096 | 0.0000 | -7.0405 | 0.0000 |
| 6 | 2 | Tension PT: Tension PT: | 0.0814 | 0.0000 | -11.5096 | 0.0000 | -7.0405 | 0.0000 |
| 6 | 2 | Tension PT: Tension PT: | 0.0814 | 0.0000 | -11.5096 | 0.0000 | -7.0405 | 0.0000 |
| 6 | 2 | Tension PT: Tension PT: | -292.4054 | -1.3159 | -12.0959 | -0.6205 | -10.5048 | -9.0396 |
| 6 | 2 | Add Superstructure: Add | -292.4054 | -1.3024 | -12.0934 | -0.6357 | -10.2769 | -9.0050 |
| 6 | 2 | Add Superstructure: Add | -292.4054 | -1.3024 | -12.0936 | -0.6357 | -10.2780 | -9.0050 |
| 6 | 2 | Add Superstructure: Add | -292.4054 | -1.3024 | -12.0936 | -0.6357 | -10.2780 | -9.0050 |
| 6 | 2 | Add Superstructure: Add | -292.2406 | -1.3021 | -12.0931 | -0.6354 | -10.2756 | -8.9994 |
| 6 | 2 | Add Superstructure: Add | -292.1164 | -1.3021 | -29.6460 | -0.6354 | -10.9991 | -8.9994 |
| 6 | 2 | Backfill to Grade: Backfill | -292.1168 | -1.2938 | -29.6001 | -0.6470 | -1.6765 | -8.9782 |
| 6 | 2 | Backfill to Grade: Backfill | -292.1168 | -1.2938 | -29.6009 | -0.6470 | -1.6820 | -8.9782 |
| 6 | 2 | Backfill to Grade: Backfill | -292.1168 | -1.2938 | -29.6009 | -0.6470 | -1.6820 | -8.9782 |
| 6 | 2 | Backfill to Grade: Backfill | -291.9364 | -1.2935 | -29.6003 | -0.6467 | -1.6795 | -8.9718 |
| 6 | 2 | Backfill to Grade: Backfill | -259.0831 | -99.0397 | -29.5620 | 69.1336 | -1.1002 | -81.5561 |
| 6 | 2 | Backfill to Grade: Backfill | -250.3914 | -128.3932 | -29.6790 | 71.0917 | -1.8970 | -102.8308 |
| 6 | 2 | Pave: Pave: Creep | -259.0832 | -99.1313 | -29.5601 | 69.4541 | -0.7941 | -62.5445 |

## RESULT : Member Sectional Forces

| Member | Station | | Result Case | Force X (kips) | Force Y (kips) | Force Z (kips) | Moment X (kips-ft) | Moment Y (kips-ft) | Moment Z (kips-ft) |
|---|---|---|---|---|---|---|---|---|---|
| 6 | 2 | Pave: Pave: Shrinkage | -259.0832 | -99.1313 | -29.5602 | 69.4541 | -0.7950 | -62.5445 | |
| 6 | 2 | Pave: Pave: PT | -259.0832 | -99.1313 | -29.5602 | 69.4541 | -0.7950 | -62.5445 | |
| 6 | 2 | Pave: Pave: Other PT | -259.1685 | -99.1323 | -29.5603 | 69.4539 | -0.7962 | -62.5476 | |
| 6 | 2 | Pave: Pave: step 1 | -259.1501 | -99.1323 | -32.1607 | 69.4539 | -0.9033 | -62.5476 | |
| 6 | 2 | Open Bridge to Traffic: | -259.1501 | -99.1454 | -32.1546 | 69.5127 | 0.0776 | -59.2205 | |
| 6 | 2 | Open Bridge to Traffic: | -259.1501 | -99.1454 | -32.1547 | 69.5127 | 0.0768 | -59.2205 | |
| 6 | 2 | Open Bridge to Traffic: | -259.1501 | -99.1454 | -32.1547 | 69.5127 | 0.0768 | -59.2205 | |
| 6 | 2 | Open Bridge to Traffic: | -259.1345 | -99.1454 | -32.1547 | 69.5128 | 0.0770 | -59.2200 | |
| 6 | 2 | Open Bridge to Traffic: | -248.1844 | -135.8372 | -44.3821 | 71.9604 | -1.4169 | -85.8133 | |
| 6 | 2 | Open Bridge to Traffic: | -250.3745 | -128.4989 | -41.9366 | 71.4709 | -1.1181 | -80.4947 | |
| 6 | 2 | Partial Live Load for | -259.1346 | -99.1538 | -32.1520 | 69.5519 | 0.4557 | -57.0095 | |
| 6 | 2 | Partial Live Load for | -259.1346 | -99.1538 | -32.1521 | 69.5519 | 0.4550 | -57.0095 | |
| 6 | 2 | Partial Live Load for | -259.1346 | -99.1538 | -32.1521 | 69.5519 | 0.4550 | -57.0095 | |
| 6 | 2 | Partial Live Load for | -259.1187 | -99.1538 | -32.1521 | 69.5519 | 0.4552 | -57.0089 | |
| 6 | 2 | Partial Live Load for | -258.0236 | -102.8230 | -33.3748 | 69.7967 | 0.3058 | -59.6683 | |
| 6 | 2 | Remove Long Term Live | -258.0256 | -103.3123 | -33.1018 | 71.7543 | 42.4604 | 55.1389 | |
| 6 | 2 | Remove Long Term Live | -258.0255 | -103.3123 | -33.1097 | 71.7543 | 42.3777 | 55.1389 | |
| 6 | 2 | Remove Long Term Live | -258.0255 | -103.3123 | -33.1097 | 71.7543 | 42.3777 | 55.1389 | |
| 6 | 2 | Remove Long Term Live | -245.3852 | -103.2420 | -33.0854 | 71.7806 | 42.5332 | 55.5486 | |
| 6 | 2 | Remove Long Term Live | -246.4802 | -99.5729 | -31.8627 | 71.5359 | 42.6826 | 58.2080 | |
| 6 | 2 | Long Term Performance: | -246.4801 | -99.5527 | -31.8691 | 71.5047 | 41.8755 | 56.3619 | |
| 6 | 2 | Long Term Performance: | -246.4801 | -99.5527 | -31.8692 | 71.5047 | 41.8789 | 56.3619 | |
| 6 | 2 | Long Term Performance: | -246.4801 | -99.5527 | -31.8692 | 71.5047 | 41.8789 | 56.3619 | |
| 6 | 2 | Long Term Performance: | -245.7642 | -99.5480 | -31.8680 | 71.5063 | 41.8874 | 56.3849 | |
| 6 | 2 | Long Term Performance: | -237.0041 | -128.9015 | -41.6500 | 73.4644 | 40.6923 | 35.1102 | |
| 6 | 2 | Long Term Performance: | -234.8141 | -136.2399 | -44.0955 | 73.9540 | 40.3935 | 29.7915 | |
| 6 | 2 | Long Term Performance: | -215.0422 | -134.7059 | -61.8250 | 74.5199 | 36.4732 | 38.0198 | |
| 6 | 2 | Strength Check: Strength | -245.7642 | -99.5480 | -31.8680 | 71.5063 | 41.8873 | 56.3849 | |
| 6 | 2 | Strength Check: Strength | -245.7642 | -99.5480 | -31.8680 | 71.5063 | 41.8873 | 56.3849 | |
| 6 | 2 | Strength Check: Strength | -245.7642 | -99.5480 | -31.8680 | 71.5063 | 41.8873 | 56.3849 | |
| 6 | 2 | Strength Check: Strength | -245.7641 | -99.5480 | -31.8680 | 71.5063 | 41.8873 | 56.3849 | |
| 6 | 2 | Strength Check: Strength | 33.0751 | -98.3066 | -31.3082 | 72.0985 | 45.1834 | 64.9819 | |
| 6 | 2 | Strength Check: Strength | -215.0421 | -134.7059 | -61.8250 | 74.5199 | 36.4730 | 38.0198 | |
| 7 | 0 | Set Precast In Place: Set | 0.0000 | 0.0000 | 0.0000 | 0.0000 | 0.0000 | 0.0000 | |

## RESULT : Member Sectional Forces

| Member | Station | Result Case | Force X (kips) | Force Y (kips) | Force Z (kips) | Moment X (kips-ft) | Moment Y (kips-ft) | Moment Z (kips-ft) |
|---|---|---|---|---|---|---|---|---|
| 7 | 0 | Set Precast In Place: Set | 0.0816 | 0.0000 | -11.5355 | 0.0000 | -11.0725 | 0.0000 |
| 7 | 0 | Tension PT: Tension PT: | 0.0814 | 0.0000 | -11.5090 | 0.0000 | -7.0369 | 0.0000 |
| 7 | 0 | Tension PT: Tension PT: | 0.0814 | 0.0000 | -11.5096 | 0.0000 | -7.0405 | 0.0000 |
| 7 | 0 | Tension PT: Tension PT: | 0.0814 | 0.0000 | -11.5096 | 0.0000 | -7.0405 | 0.0000 |
| 7 | 0 | Tension PT: Tension PT: | 0.0814 | 0.0000 | -11.5096 | 0.0000 | -7.0405 | 0.0000 |
| 7 | 0 | Tension PT: Tension PT: | -292.4054 | -13.5915 | -12.0959 | 1.6510 | -10.5048 | -9.0557 |
| 7 | 0 | Add Superstructure: Add | -292.4054 | -13.6263 | -12.0934 | 1.6448 | -10.2769 | -9.0211 |
| 7 | 0 | Add Superstructure: Add | -292.4054 | -13.6263 | -12.0936 | 1.6448 | -10.2780 | -9.0211 |
| 7 | 0 | Add Superstructure: Add | -292.4054 | -13.6263 | -12.0936 | 1.6448 | -10.2780 | -9.0211 |
| 7 | 0 | Add Superstructure: Add | -292.2406 | -13.6213 | -12.0931 | 1.6442 | -10.2756 | -9.0156 |
| 7 | 0 | Add Superstructure: Add | -292.1164 | -13.6213 | -29.6460 | 1.6442 | -10.9991 | -9.0156 |
| 7 | 0 | Backfill to Grade: Backfill | -292.1168 | -13.6428 | -29.6001 | 1.6381 | -1.6765 | -8.9943 |
| 7 | 0 | Backfill to Grade: Backfill | -292.1168 | -13.6428 | -29.6009 | 1.6381 | -1.6820 | -8.9943 |
| 7 | 0 | Backfill to Grade: Backfill | -292.1168 | -13.6428 | -29.6009 | 1.6381 | -1.6820 | -8.9943 |
| 7 | 0 | Backfill to Grade: Backfill | -291.9364 | -13.6374 | -29.6003 | 1.6375 | -1.6795 | -8.9880 |
| 7 | 0 | Backfill to Grade: Backfill | -259.0831 | 40.7710 | -29.5620 | 43.2627 | -1.1002 | -81.3731 |
| 7 | 0 | Backfill to Grade: Backfill | -250.3914 | 55.7016 | -29.6790 | 37.0263 | -1.8970 | -102.5898 |
| 7 | 0 | Pave: Pave: Creep | -259.0832 | 46.7915 | -29.5601 | 42.4522 | -0.7941 | -62.3534 |
| 7 | 0 | Pave: Pave: Shrinkage | -259.0832 | 46.7915 | -29.5602 | 42.4522 | -0.7950 | -62.3534 |
| 7 | 0 | Pave: Pave: PT | -259.0832 | 46.7915 | -29.5602 | 42.4522 | -0.7950 | -62.3534 |
| 7 | 0 | Pave: Pave: Other PT | -259.1685 | 46.7876 | -29.5603 | 42.4525 | -0.7962 | -62.3565 |
| 7 | 0 | Pave: Pave: step 1 | -259.1501 | 46.7876 | -32.1607 | 42.4525 | -0.9033 | -62.3565 |
| 7 | 0 | Open Bridge to Traffic: | -259.1501 | 47.8553 | -32.1546 | 42.3113 | 0.0776 | -59.0280 |
| 7 | 0 | Open Bridge to Traffic: | -259.1501 | 47.8553 | -32.1547 | 42.3113 | 0.0768 | -59.0280 |
| 7 | 0 | Open Bridge to Traffic: | -259.1501 | 47.8553 | -32.1547 | 42.3113 | 0.0768 | -59.0280 |
| 7 | 0 | Open Bridge to Traffic: | -259.1345 | 47.8557 | -32.1547 | 42.3113 | 0.0770 | -59.0275 |
| 7 | 0 | Open Bridge to Traffic: | -248.1844 | 66.5190 | -44.3821 | 34.5159 | -1.4169 | -85.5484 |
| 7 | 0 | Open Bridge to Traffic: | -250.3745 | 62.7864 | -41.9366 | 36.0750 | -1.1181 | -80.2442 |
| 7 | 0 | Partial Live Load for | -259.1346 | 48.5653 | -32.1520 | 42.2175 | 0.4557 | -56.8161 |
| 7 | 0 | Partial Live Load for | -259.1346 | 48.5653 | -32.1521 | 42.2175 | 0.4550 | -56.8161 |
| 7 | 0 | Partial Live Load for | -259.1346 | 48.5653 | -32.1521 | 42.2175 | 0.4550 | -56.8161 |
| 7 | 0 | Partial Live Load for | -259.1187 | 48.5658 | -32.1521 | 42.2175 | 0.4552 | -56.8155 |
| 7 | 0 | Partial Live Load for | -258.0236 | 50.4321 | -33.3748 | 41.4379 | 0.3058 | -59.4676 |
| 7 | 0 | Remove Long Term Live | -258.0256 | 87.2158 | -33.1018 | 36.4985 | 42.4604 | 55.3884 |

## RESULT : Member Sectional Forces

| Member | Station | Result Case | Force X (kips) | Force Y (kips) | Force Z (kips) | Moment X (kips-ft) | Moment Y (kips-ft) | Moment Z (kips-ft) |
|---|---|---|---|---|---|---|---|---|
| 7 | 0 | Remove Long Term Live | -258.0255 | 87.2158 | -33.1097 | 36.4985 | 42.3777 | 55.3884 |
| 7 | 0 | Remove Long Term Live | -258.0255 | 87.2158 | -33.1097 | 36.4985 | 42.3777 | 55.3884 |
| 7 | 0 | Remove Long Term Live | -245.3852 | 87.8068 | -33.0854 | 36.4285 | 42.5332 | 55.7988 |
| 7 | 0 | Remove Long Term Live | -246.4802 | 85.9405 | -31.8627 | 37.2080 | 42.6826 | 58.4509 |
| 7 | 0 | Long Term Performance: | -246.4801 | 85.2946 | -31.8691 | 37.3001 | 41.8755 | 56.6040 |
| 7 | 0 | Long Term Performance: | -246.4801 | 85.2946 | -31.8692 | 37.3001 | 41.8789 | 56.6040 |
| 7 | 0 | Long Term Performance: | -246.4801 | 85.2946 | -31.8692 | 37.3001 | 41.8789 | 56.6040 |
| 7 | 0 | Long Term Performance: | -245.7642 | 85.3306 | -31.8680 | 37.2959 | 41.8874 | 56.6270 |
| 7 | 0 | Long Term Performance: | -237.0041 | 100.2612 | -41.6500 | 31.0596 | 40.6923 | 35.4103 |
| 7 | 0 | Long Term Performance: | -234.8141 | 103.9939 | -44.0955 | 29.5005 | 40.3935 | 30.1061 |
| 7 | 0 | Long Term Performance: | -215.0422 | 116.8313 | -61.8250 | 27.9748 | 36.4732 | 38.3492 |
| 7 | 0 | Strength Check: Strength | -245.7642 | 85.3306 | -31.8680 | 37.2959 | 41.8873 | 56.6270 |
| 7 | 0 | Strength Check: Strength | -245.7642 | 85.3306 | -31.8680 | 37.2959 | 41.8873 | 56.6270 |
| 7 | 0 | Strength Check: Strength | -245.7642 | 85.3306 | -31.8680 | 37.2959 | 41.8873 | 56.6270 |
| 7 | 0 | Strength Check: Strength | -245.7641 | 85.3306 | -31.8680 | 37.2959 | 41.8873 | 56.6270 |
| 7 | 0 | Strength Check: Strength | 33.0751 | 98.2877 | -31.3082 | 35.7202 | 45.1834 | 65.2393 |
| 7 | 0 | Strength Check: Strength | -215.0421 | 116.8313 | -61.8250 | 27.9748 | 36.4730 | 38.3492 |
| 7 | 1 | Set Precast In Place: Set | 0.0000 | 0.0000 | 0.0000 | 0.0000 | 0.0000 | 0.0000 |
| 7 | 1 | Set Precast In Place: Set | 0.1131 | 0.0000 | -15.9899 | 0.0000 | -24.8355 | 0.0000 |
| 7 | 1 | Tension PT: Tension PT: | 0.1130 | 0.0000 | -15.9635 | 0.0000 | -20.7735 | 0.0000 |
| 7 | 1 | Tension PT: Tension PT: | 0.1130 | 0.0000 | -15.9640 | 0.0000 | -20.7776 | 0.0000 |
| 7 | 1 | Tension PT: Tension PT: | 0.1130 | 0.0000 | -15.9640 | 0.0000 | -20.7776 | 0.0000 |
| 7 | 1 | Tension PT: Tension PT: | 0.1130 | 0.0000 | -15.9640 | 0.0000 | -20.7776 | 0.0000 |
| 7 | 1 | Tension PT: Tension PT: | -291.7444 | -13.5915 | -16.5459 | 1.6481 | -24.7283 | -23.0461 |
| 7 | 1 | Add Superstructure: Add | -291.7444 | -13.6263 | -16.5434 | 1.6420 | -24.4979 | -23.0465 |
| 7 | 1 | Add Superstructure: Add | -291.7444 | -13.6263 | -16.5435 | 1.6420 | -24.4991 | -23.0465 |
| 7 | 1 | Add Superstructure: Add | -291.7444 | -13.6263 | -16.5435 | 1.6420 | -24.4991 | -23.0465 |
| 7 | 1 | Add Superstructure: Add | -291.5846 | -13.6213 | -16.5431 | 1.6414 | -24.4970 | -23.0328 |
| 7 | 1 | Add Superstructure: Add | -291.4054 | -13.6213 | -41.8720 | 1.6414 | -46.6620 | -23.0328 |
| 7 | 1 | Backfill to Grade: Backfill | -291.4057 | -13.6428 | -41.8261 | 1.6353 | -37.2934 | -23.0330 |
| 7 | 1 | Backfill to Grade: Backfill | -291.4057 | -13.6428 | -41.8269 | 1.6353 | -37.2998 | -23.0330 |
| 7 | 1 | Backfill to Grade: Backfill | -291.4057 | -13.6428 | -41.8269 | 1.6353 | -37.2998 | -23.0330 |
| 7 | 1 | Backfill to Grade: Backfill | -291.2323 | -13.6374 | -41.8264 | 1.6347 | -37.2977 | -23.0170 |
| 7 | 1 | Backfill to Grade: Backfill | -258.3790 | 7.5001 | -41.7880 | 73.4806 | -36.6801 | -57.6032 |

## RESULT : Member Sectional Forces

| Member | Station | | Result Case | Force X (kips) | | Force Y (kips) | | Force Z (kips) | Moment X (kips-ft) | Moment Y (kips-ft) | Moment Z (kips-ft) |
|---|---|---|---|---|---|---|---|---|---|---|---|
| 7 | 1 | Backfill to Grade: Backfill | -249.6873 | 12.4225 | -41.9051 | 67.2443 | -37.5939 | -68.8892 | | | |
| 7 | 1 | Pave: Pave: Creep | -258.3790 | 13.5207 | -41.7861 | 72.6701 | -36.3722 | -32.5628 | | | |
| 7 | 1 | Pave: Pave: Shrinkage | -258.3790 | 13.5207 | -41.7862 | 72.6701 | -36.3731 | -32.5628 | | | |
| 7 | 1 | Pave: Pave: PT | -258.3790 | 13.5207 | -41.7862 | 72.6701 | -36.3731 | -32.5628 | | | |
| 7 | 1 | Pave: Pave: Other PT | -258.4645 | 13.5168 | -41.7863 | 72.6705 | -36.3744 | -32.5697 | | | |
| 7 | 1 | Pave: Pave: step 1 | -258.4379 | 13.5168 | -45.5388 | 72.6705 | -39.6581 | -32.5697 | | | |
| 7 | 1 | Open Bridge to Traffic: | -258.4380 | 14.5845 | -45.5327 | 72.5293 | -38.6711 | -28.1735 | | | |
| 7 | 1 | Open Bridge to Traffic: | -258.4380 | 14.5845 | -45.5328 | 72.5293 | -38.6720 | -28.1735 | | | |
| 7 | 1 | Open Bridge to Traffic: | -258.4380 | 14.5845 | -45.5328 | 72.5293 | -38.6720 | -28.1735 | | | |
| 7 | 1 | Open Bridge to Traffic: | -258.4231 | 14.5849 | -45.5327 | 72.5293 | -38.6718 | -28.1721 | | | |
| 7 | 1 | Open Bridge to Traffic: | -247.4351 | 20.7379 | -63.1122 | 64.7339 | -55.0696 | -42.2796 | | | |
| 7 | 1 | Open Bridge to Traffic: | -249.6327 | 19.5073 | -59.5963 | 66.2930 | -51.7900 | -39.4581 | | | |
| 7 | 1 | Partial Live Load for | -258.4231 | 15.2945 | -45.5301 | 72.4355 | -38.2905 | -25.2511 | | | |
| 7 | 1 | Partial Live Load for | -258.4231 | 15.2945 | -45.5302 | 72.4355 | -38.2913 | -25.2511 | | | |
| 7 | 1 | Partial Live Load for | -258.4231 | 15.2945 | -45.5302 | 72.4355 | -38.2913 | -25.2511 | | | |
| 7 | 1 | Partial Live Load for | -258.4078 | 15.2950 | -45.5301 | 72.4355 | -38.2912 | -25.2497 | | | |
| 7 | 1 | Partial Live Load for | -257.3090 | 15.9103 | -47.2881 | 71.6559 | -39.9309 | -26.6604 | | | |
| 7 | 1 | Remove Long Term Live | -257.3109 | 52.6939 | -47.0150 | 66.7165 | 2.4968 | 124.9801 | | | |
| 7 | 1 | Remove Long Term Live | -257.3109 | 52.6939 | -47.0230 | 66.7165 | 2.4061 | 124.9801 | | | |
| 7 | 1 | Remove Long Term Live | -257.3109 | 52.6939 | -47.0230 | 66.7165 | 2.4061 | 124.9801 | | | |
| 7 | 1 | Remove Long Term Live | -244.7367 | 53.2849 | -46.9991 | 66.6467 | 2.5754 | 126.0229 | | | |
| 7 | 1 | Remove Long Term Live | -245.8355 | 52.6696 | -45.2412 | 67.4263 | 4.2152 | 127.4336 | | | |
| 7 | 1 | Long Term Performance: | -245.8355 | 52.0238 | -45.2476 | 67.5184 | 3.4017 | 124.9409 | | | |
| 7 | 1 | Long Term Performance: | -245.8355 | 52.0238 | -45.2477 | 67.5184 | 3.4049 | 124.9409 | | | |
| 7 | 1 | Long Term Performance: | -245.8355 | 52.0238 | -45.2477 | 67.5184 | 3.4049 | 124.9409 | | | |
| 7 | 1 | Long Term Performance: | -245.1187 | 52.0598 | -45.2465 | 67.5142 | 3.4148 | 124.9994 | | | |
| 7 | 1 | Long Term Performance: | -236.3283 | 56.9821 | -59.3101 | 61.2778 | -9.7034 | 113.7134 | | | |
| 7 | 1 | Long Term Performance: | -234.1307 | 58.2127 | -62.8260 | 59.7188 | -12.9830 | 110.8919 | | | |
| 7 | 1 | Long Term Performance: | -214.3047 | 71.0502 | -88.2031 | 58.1931 | -38.4571 | 131.9728 | | | |
| 7 | 1 | Strength Check: Strength | -245.1187 | 52.0598 | -45.2465 | 67.5142 | 3.4147 | 124.9994 | | | |
| 7 | 1 | Strength Check: Strength | -245.1187 | 52.0598 | -45.2465 | 67.5142 | 3.4147 | 124.9994 | | | |
| 7 | 1 | Strength Check: Strength | -245.1187 | 52.0598 | -45.2465 | 67.5142 | 3.4147 | 124.9994 | | | |
| 7 | 1 | Strength Check: Strength | -245.1186 | 52.0598 | -45.2465 | 67.5142 | 3.4147 | 124.9994 | | | |
| 7 | 1 | Strength Check: Strength | 33.1698 | 65.0168 | -44.6906 | 65.9409 | 7.1830 | 146.9186 | | | |

## RESULT : Member Sectional Forces

| Member | Station | Result Case | Force X (kips) | Force Y (kips) | Force Z (kips) | Moment X (kips-ft) | Moment Y (kips-ft) | Moment Z (kips-ft) |
|---|---|---|---|---|---|---|---|---|
| 7 | 1 | Strength Check: Strength | -214.3046 | 71.0502 | -88.2031 | 58.1931 | -38.4572 | 131.9728 |
| 7 | 2 | Set Precast In Place: Set | 0.0000 | 0.0000 | 0.0000 | 0.0000 | 0.0000 | 0.0000 |
| 7 | 2 | Set Precast In Place: Set | 0.1447 | 0.0000 | -20.4443 | 0.0000 | -43.0530 | 0.0000 |
| 7 | 2 | Tension PT: Tension PT: | 0.1445 | 0.0000 | -20.4179 | 0.0000 | -38.9647 | 0.0000 |
| 7 | 2 | Tension PT: Tension PT: | 0.1445 | 0.0000 | -20.4184 | 0.0000 | -38.9693 | 0.0000 |
| 7 | 2 | Tension PT: Tension PT: | 0.1445 | 0.0000 | -20.4184 | 0.0000 | -38.9693 | 0.0000 |
| 7 | 2 | Tension PT: Tension PT: | 0.1445 | 0.0000 | -20.4184 | 0.0000 | -38.9693 | 0.0000 |
| 7 | 2 | Tension PT: Tension PT: | -291.0822 | -13.5915 | -20.9958 | 1.6453 | -43.3971 | -37.0374 |
| 7 | 2 | Add Superstructure: Add | -291.0822 | -13.6263 | -20.9933 | 1.6391 | -43.1642 | -37.0726 |
| 7 | 2 | Add Superstructure: Add | -291.0822 | -13.6263 | -20.9935 | 1.6391 | -43.1656 | -37.0726 |
| 7 | 2 | Add Superstructure: Add | -291.0822 | -13.6263 | -20.9935 | 1.6391 | -43.1656 | -37.0726 |
| 7 | 2 | Add Superstructure: Add | -290.9242 | -13.6213 | -20.9931 | 1.6386 | -43.1634 | -37.0528 |
| 7 | 2 | Add Superstructure: Add | -290.6899 | -13.6213 | -54.0980 | 1.6386 | -94.5460 | -37.0528 |
| 7 | 2 | Backfill to Grade: Backfill | -290.6902 | -13.6428 | -54.0520 | 1.6325 | -85.1314 | -37.0745 |
| 7 | 2 | Backfill to Grade: Backfill | -290.6902 | -13.6428 | -54.0529 | 1.6325 | -85.1387 | -37.0745 |
| 7 | 2 | Backfill to Grade: Backfill | -290.6902 | -13.6428 | -54.0529 | 1.6325 | -85.1387 | -37.0745 |
| 7 | 2 | Backfill to Grade: Backfill | -290.5180 | -13.6374 | -54.0524 | 1.6319 | -85.1363 | -37.0524 |
| 7 | 2 | Backfill to Grade: Backfill | -257.6647 | -26.0707 | -54.0140 | 103.6986 | -84.4803 | -67.2613 |
| 7 | 2 | Backfill to Grade: Backfill | -248.9730 | -31.2046 | -54.1310 | 97.4623 | -85.5112 | -78.6491 |
| 7 | 2 | Pave: Pave: Creep | -257.6647 | -20.0502 | -54.0121 | 102.8881 | -84.1705 | -36.2003 |
| 7 | 2 | Pave: Pave: Shrinkage | -257.6647 | -20.0502 | -54.0122 | 102.8881 | -84.1715 | -36.2003 |
| 7 | 2 | Pave: Pave: PT | -257.6647 | -20.0502 | -54.0122 | 102.8881 | -84.1715 | -36.2003 |
| 7 | 2 | Pave: Pave: Other PT | -257.7498 | -20.0540 | -54.0123 | 102.8885 | -84.1729 | -36.2113 |
| 7 | 2 | Pave: Pave: step 1 | -257.7151 | -20.0540 | -58.9167 | 102.8885 | -91.7851 | -36.2113 |
| 7 | 2 | Open Bridge to Traffic: | -257.7151 | -18.9864 | -58.9106 | 102.7473 | -90.7920 | -30.7474 |
| 7 | 2 | Open Bridge to Traffic: | -257.7151 | -18.9864 | -58.9107 | 102.7473 | -90.7929 | -30.7474 |
| 7 | 2 | Open Bridge to Traffic: | -257.7151 | -18.9864 | -58.9107 | 102.7473 | -90.7929 | -30.7474 |
| 7 | 2 | Open Bridge to Traffic: | -257.7003 | -18.9859 | -58.9107 | 102.7472 | -90.7928 | -30.7455 |
| 7 | 2 | Open Bridge to Traffic: | -246.6744 | -25.4033 | -81.8421 | 94.9518 | -127.4465 | -44.9802 |
| 7 | 2 | Open Bridge to Traffic: | -248.8796 | -24.1198 | -77.2559 | 96.5109 | -120.1158 | -42.1333 |
| 7 | 2 | Partial Live Load for | -257.7003 | -18.2763 | -58.9081 | 102.6535 | -90.4088 | -27.1149 |
| 7 | 2 | Partial Live Load for | -257.7003 | -18.2763 | -58.9082 | 102.6535 | -90.4098 | -27.1149 |
| 7 | 2 | Partial Live Load for | -257.7003 | -18.2763 | -58.9082 | 102.6535 | -90.4098 | -27.1149 |
| 7 | 2 | Partial Live Load for | -257.6851 | -18.2759 | -58.9081 | 102.6534 | -90.4096 | -27.1129 |

## RESULT : Member Sectional Forces

| Member | Station | Result Case | Force X (kips) | Force Y (kips) | Force Z (kips) | Moment X (kips-ft) | Moment Y (kips-ft) | Moment Z (kips-ft) |
|---|---|---|---|---|---|---|---|---|
| 7 | 2 | Partial Live Load for | -256.5826 | -18.9176 | -61.2013 | 101.8739 | -94.0749 | -28.5364 |
| 7 | 2 | Remove Long Term Live | -256.5845 | 17.8660 | -60.9282 | 96.9344 | -51.3741 | 159.8887 |
| 7 | 2 | Remove Long Term Live | -256.5844 | 17.8660 | -60.9362 | 96.9344 | -51.4728 | 159.8887 |
| 7 | 2 | Remove Long Term Live | -256.5844 | 17.8660 | -60.9362 | 96.9344 | -51.4728 | 159.8887 |
| 7 | 2 | Remove Long Term Live | -244.0235 | 18.4571 | -60.9124 | 96.8647 | -51.2818 | 161.5308 |
| 7 | 2 | Remove Long Term Live | -245.1261 | 19.0988 | -58.6192 | 97.6443 | -47.6165 | 162.9543 |
| 7 | 2 | Long Term Performance: | -245.1261 | 18.4530 | -58.6257 | 97.7364 | -48.4364 | 159.8157 |
| 7 | 2 | Long Term Performance: | -245.1261 | 18.4530 | -58.6258 | 97.7364 | -48.4333 | 159.8157 |
| 7 | 2 | Long Term Performance: | -245.1261 | 18.4530 | -58.6258 | 97.7364 | -48.4333 | 159.8157 |
| 7 | 2 | Long Term Performance: | -244.4090 | 18.4889 | -58.6246 | 97.7321 | -48.4221 | 159.9100 |
| 7 | 2 | Long Term Performance: | -235.5883 | 13.3550 | -76.9698 | 91.4958 | -77.7451 | 148.5222 |
| 7 | 2 | Long Term Performance: | -233.3832 | 12.0716 | -81.5561 | 89.9368 | -85.0759 | 145.6753 |
| 7 | 2 | Long Term Performance: | -213.5031 | 24.9090 | -114.5807 | 88.4111 | -139.7516 | 179.5939 |
| 7 | 2 | Strength Check: Strength | -244.4090 | 18.4889 | -58.6246 | 97.7322 | -48.4223 | 159.9100 |
| 7 | 2 | Strength Check: Strength | -244.4090 | 18.4889 | -58.6246 | 97.7322 | -48.4223 | 159.9100 |
| 7 | 2 | Strength Check: Strength | -244.4090 | 18.4889 | -58.6246 | 97.7322 | -48.4223 | 159.9100 |
| 7 | 2 | Strength Check: Strength | -244.4089 | 18.4889 | -58.6246 | 97.7322 | -48.4223 | 159.9100 |
| 7 | 2 | Strength Check: Strength | 33.2645 | 31.4460 | -58.0730 | 96.1617 | -44.2001 | 195.1762 |
| 7 | 2 | Strength Check: Strength | -213.5030 | 24.9090 | -114.5807 | 88.4111 | -139.7518 | 179.5940 |
| 8 | 0 | Set Precast In Place: Set | 0.0000 | 0.0000 | 0.0000 | 0.0000 | 0.0000 | 0.0000 |
| 8 | 0 | Set Precast In Place: Set | 0.0657 | 0.0000 | -9.2845 | 0.0000 | -43.0530 | 0.0000 |
| 8 | 0 | Tension PT: Tension PT: | 0.0692 | 0.0000 | -9.7751 | 0.0000 | -38.9647 | 0.0000 |
| 8 | 0 | Tension PT: Tension PT: | 0.0692 | 0.0000 | -9.7745 | 0.0000 | -38.9693 | 0.0000 |
| 8 | 0 | Tension PT: Tension PT: | 0.0692 | 0.0000 | -9.7745 | 0.0000 | -38.9693 | 0.0000 |
| 8 | 0 | Tension PT: Tension PT: | 0.0692 | 0.0000 | -9.7745 | 0.0000 | -38.9693 | 0.0000 |
| 8 | 0 | Tension PT: Tension PT: | -291.1098 | 26.2605 | -17.1003 | 0.6437 | -43.3971 | -37.0303 |
| 8 | 0 | Add Superstructure: Add | -291.1096 | 26.2647 | -17.1283 | 0.7561 | -43.1642 | -37.0663 |
| 8 | 0 | Add Superstructure: Add | -291.1096 | 26.2647 | -17.1281 | 0.7561 | -43.1656 | -37.0663 |
| 8 | 0 | Add Superstructure: Add | -291.1096 | 26.2647 | -17.1281 | 0.7561 | -43.1656 | -37.0663 |
| 8 | 0 | Add Superstructure: Add | -290.9515 | 26.2505 | -17.1241 | 0.7558 | -43.1634 | -37.0465 |
| 8 | 0 | Add Superstructure: Add | -291.1090 | 26.2505 | 5.1305 | 0.7558 | -94.5460 | -37.0465 |
| 8 | 0 | Backfill to Grade: Backfill | -291.1010 | 26.2531 | 4.0008 | 0.8445 | -85.1314 | -37.0689 |
| 8 | 0 | Backfill to Grade: Backfill | -291.1010 | 26.2531 | 4.0017 | 0.8445 | -85.1387 | -37.0689 |
| 8 | 0 | Backfill to Grade: Backfill | -291.1010 | 26.2531 | 4.0017 | 0.8445 | -85.1387 | -37.0689 |

## RESULT : Member Sectional Forces

| Member | Station | Result Case | Force X (kips) | Force Y (kips) | Force Z (kips) | Moment X (kips-ft) | Moment Y (kips-ft) | Moment Z (kips-ft) |
|---|---|---|---|---|---|---|---|---|
| 8 | 0 | Backfill to Grade: Backfill | -290.9288 | 26.2375 | 4.0060 | 0.8441 | -85.1363 | -37.0468 |
| 8 | 0 | Backfill to Grade: Backfill | -258.0826 | 85.1211 | 5.0392 | -130.8461 | -84.4803 | -65.6017 |
| 8 | 0 | Backfill to Grade: Backfill | -249.3798 | 104.2618 | 3.3551 | -131.2814 | -85.5112 | -77.0305 |
| 8 | 0 | Pave: Pave: Creep | -258.0823 | 81.3946 | 5.0021 | -131.2746 | -84.1705 | -34.5434 |
| 8 | 0 | Pave: Pave: Shrinkage | -258.0823 | 81.3946 | 5.0022 | -131.2746 | -84.1715 | -34.5434 |
| 8 | 0 | Pave: Pave: PT | -258.0823 | 81.3946 | 5.0022 | -131.2746 | -84.1715 | -34.5434 |
| 8 | 0 | Pave: Pave: Other PT | -258.1673 | 81.4022 | 5.0001 | -131.2744 | -84.1729 | -34.5544 |
| 8 | 0 | Pave: Pave: step 1 | -258.1906 | 81.4022 | 8.2970 | -131.2744 | -91.7851 | -34.5544 |
| 8 | 0 | Open Bridge to Traffic: | -258.1898 | 80.7467 | 8.1779 | -131.3677 | -90.7920 | -29.0909 |
| 8 | 0 | Open Bridge to Traffic: | -258.1898 | 80.7467 | 8.1780 | -131.3677 | -90.7929 | -29.0909 |
| 8 | 0 | Open Bridge to Traffic: | -258.1898 | 80.7467 | 8.1780 | -131.3677 | -90.7929 | -29.0909 |
| 8 | 0 | Open Bridge to Traffic: | -258.1750 | 80.7454 | 8.1784 | -131.3677 | -90.7928 | -29.0890 |
| 8 | 0 | Open Bridge to Traffic: | -247.4049 | 104.6712 | 21.3905 | -131.9118 | -127.4465 | -43.3750 |
| 8 | 0 | Open Bridge to Traffic: | -249.5589 | 99.8860 | 18.7481 | -131.8030 | -120.1158 | -40.5178 |
| 8 | 0 | Partial Live Load for | -258.1747 | 80.3098 | 8.1323 | -131.4302 | -90.4088 | -25.4586 |
| 8 | 0 | Partial Live Load for | -258.1747 | 80.3098 | 8.1324 | -131.4302 | -90.4098 | -25.4586 |
| 8 | 0 | Partial Live Load for | -258.1747 | 80.3098 | 8.1324 | -131.4302 | -90.4098 | -25.4586 |
| 8 | 0 | Partial Live Load for | -258.1595 | 80.3084 | 8.1328 | -131.4303 | -90.4096 | -25.4566 |
| 8 | 0 | Partial Live Load for | -257.0825 | 82.7010 | 9.4540 | -131.4847 | -94.0749 | -26.8852 |
| 8 | 0 | Remove Long Term Live | -257.0462 | 60.0947 | 4.3300 | -134.1013 | -51.3741 | 161.5234 |
| 8 | 0 | Remove Long Term Live | -257.0463 | 60.0947 | 4.3418 | -134.1013 | -51.4728 | 161.5234 |
| 8 | 0 | Remove Long Term Live | -257.0463 | 60.0947 | 4.3418 | -134.1013 | -51.4728 | 161.5234 |
| 8 | 0 | Remove Long Term Live | -244.4875 | 58.9556 | 4.6578 | -134.1291 | -51.2818 | 163.1653 |
| 8 | 0 | Remove Long Term Live | -245.5645 | 56.5630 | 3.3366 | -134.0747 | -47.6165 | 164.5939 |
| 8 | 0 | Long Term Performance: | -245.5652 | 56.9396 | 3.4350 | -134.0600 | -48.4364 | 161.4559 |
| 8 | 0 | Long Term Performance: | -245.5652 | 56.9396 | 3.4346 | -134.0600 | -48.4333 | 161.4559 |
| 8 | 0 | Long Term Performance: | -245.5652 | 56.9396 | 3.4346 | -134.0600 | -48.4333 | 161.4559 |
| 8 | 0 | Long Term Performance: | -244.8483 | 56.8745 | 3.4526 | -134.0616 | -48.4221 | 161.5501 |
| 8 | 0 | Long Term Performance: | -236.2322 | 76.0152 | 14.0223 | -134.4969 | -77.7451 | 150.1213 |
| 8 | 0 | Long Term Performance: | -234.0782 | 80.8003 | 16.6647 | -134.6057 | -85.0759 | 147.2641 |
| 8 | 0 | Long Term Performance: | -214.5390 | 57.3402 | 31.8265 | -135.1772 | -139.7516 | 181.1760 |
| 8 | 0 | Strength Check: Strength | -244.8483 | 56.8745 | 3.4526 | -134.0617 | -48.4223 | 161.5501 |
| 8 | 0 | Strength Check: Strength | -244.8483 | 56.8745 | 3.4526 | -134.0617 | -48.4223 | 161.5501 |
| 8 | 0 | Strength Check: Strength | -244.8483 | 56.8745 | 3.4526 | -134.0617 | -48.4223 | 161.5501 |

## RESULT : Member Sectional Forces

| Member | Station | Result Case | Force X (kips) | Force Y (kips) | Force Z (kips) | Moment X (kips-ft) | Moment Y (kips-ft) | Moment Z (kips-ft) |
|---|---|---|---|---|---|---|---|---|
| 8 | 0 | Strength Check: Strength | -244.8482 | 56.8745 | 3.4526 | -134.0617 | -48.4223 | 161.5501 |
| 8 | 0 | Strength Check: Strength | 32.7797 | 31.8430 | 10.4375 | -134.6755 | -44.2001 | 196.8096 |
| 8 | 0 | Strength Check: Strength | -214.5389 | 57.3402 | 31.8265 | -135.1773 | -139.7518 | 181.1760 |
| 8 | 1 | Set Precast In Place: Set | 0.0000 | 0.0000 | 0.0000 | 0.0000 | 0.0000 | 0.0000 |
| 8 | 1 | Set Precast In Place: Set | 0.1982 | 0.0000 | -28.0049 | 0.0000 | -120.7408 | 0.0000 |
| 8 | 1 | Tension PT: Tension PT: | 0.2016 | 0.0000 | -28.4955 | 0.0000 | -118.6967 | 0.0000 |
| 8 | 1 | Tension PT: Tension PT: | 0.2016 | 0.0000 | -28.4949 | 0.0000 | -118.6990 | 0.0000 |
| 8 | 1 | Tension PT: Tension PT: | 0.2016 | 0.0000 | -28.4949 | 0.0000 | -118.6990 | 0.0000 |
| 8 | 1 | Tension PT: Tension PT: | 0.2016 | 0.0000 | -28.4949 | 0.0000 | -118.6990 | 0.0000 |
| 8 | 1 | Tension PT: Tension PT: | -287.3247 | 26.2605 | -35.7949 | 0.6253 | -152.9377 | 69.7806 |
| 8 | 1 | Add Superstructure: Add | -287.3245 | 26.2647 | -35.8228 | 0.7376 | -152.8212 | 69.7622 |
| 8 | 1 | Add Superstructure: Add | -287.3245 | 26.2647 | -35.8227 | 0.7376 | -152.8219 | 69.7622 |
| 8 | 1 | Add Superstructure: Add | -287.3245 | 26.2647 | -35.8227 | 0.7376 | -152.8219 | 69.7622 |
| 8 | 1 | Add Superstructure: Add | -287.1682 | 26.2505 | -35.8187 | 0.7373 | -152.8034 | 69.7238 |
| 8 | 1 | Add Superstructure: Add | -287.0964 | 26.2505 | -45.9639 | 0.7373 | -178.9575 | 69.7238 |
| 8 | 1 | Backfill to Grade: Backfill | -287.0884 | 26.2531 | -47.0936 | 0.8260 | -174.2502 | 69.7123 |
| 8 | 1 | Backfill to Grade: Backfill | -287.0884 | 26.2531 | -47.0928 | 0.8260 | -174.2538 | 69.7123 |
| 8 | 1 | Backfill to Grade: Backfill | -287.0884 | 26.2531 | -47.0928 | 0.8260 | -174.2538 | 69.7123 |
| 8 | 1 | Backfill to Grade: Backfill | -286.9174 | 26.2375 | -47.0884 | 0.8256 | -174.2335 | 69.6703 |
| 8 | 1 | Backfill to Grade: Backfill | -254.0712 | -55.7569 | -46.0552 | -0.7368 | -169.2724 | -6.7726 |
| 8 | 1 | Backfill to Grade: Backfill | -245.3684 | -78.7171 | -47.7393 | -1.1721 | -177.3205 | -26.0896 |
| 8 | 1 | Pave: Pave: Creep | -254.0709 | -59.4834 | -46.0924 | -1.1653 | -169.1175 | 8.7580 |
| 8 | 1 | Pave: Pave: Shrinkage | -254.0709 | -59.4834 | -46.0923 | -1.1653 | -169.1180 | 8.7580 |
| 8 | 1 | Pave: Pave: PT | -254.0709 | -59.4834 | -46.0923 | -1.1653 | -169.1180 | 8.7580 |
| 8 | 1 | Pave: Pave: Other PT | -254.1555 | -59.4757 | -46.0944 | -1.1651 | -169.1282 | 8.7788 |
| 8 | 1 | Pave: Pave: step 1 | -254.1449 | -59.4757 | -47.5974 | -1.1651 | -173.0029 | 8.7788 |
| 8 | 1 | Open Bridge to Traffic: | -254.1441 | -60.1312 | -47.7166 | -1.2584 | -172.5063 | 11.5109 |
| 8 | 1 | Open Bridge to Traffic: | -254.1441 | -60.1312 | -47.7165 | -1.2584 | -172.5068 | 11.5109 |
| 8 | 1 | Open Bridge to Traffic: | -254.1441 | -60.1312 | -47.7165 | -1.2584 | -172.5068 | 11.5109 |
| 8 | 1 | Open Bridge to Traffic: | -254.1293 | -60.1326 | -47.7161 | -1.2585 | -172.5050 | 11.5073 |
| 8 | 1 | Open Bridge to Traffic: | -243.2014 | -88.8329 | -56.8039 | -1.8026 | -200.5663 | -12.6388 |
| 8 | 1 | Open Bridge to Traffic: | -245.3870 | -83.0928 | -54.9863 | -1.6938 | -194.9540 | -7.8096 |
| 8 | 1 | Partial Live Load for | -254.1290 | -60.5682 | -47.7622 | -1.3209 | -172.3131 | 13.3227 |
| 8 | 1 | Partial Live Load for | -254.1290 | -60.5682 | -47.7620 | -1.3209 | -172.3136 | 13.3227 |

## RESULT : Member Sectional Forces

| Member | Station | | Result Case | Force X (kips) | | Force Y (kips) | | Force Z (kips) | Moment X (kips-ft) | Moment Y (kips-ft) | Moment Z (kips-ft) |
|---|---|---|---|---|---|---|---|---|---|---|---|
| 8 | 1 | Partial Live Load for | -254.1290 | -60.5682 | -47.7620 | -1.3209 | -172.3136 | 13.3227 | | | |
| 8 | 1 | Partial Live Load for | -254.1139 | -60.5695 | -47.7617 | -1.3210 | -172.3118 | 13.3190 | | | |
| 8 | 1 | Partial Live Load for | -253.0211 | -63.4396 | -48.6704 | -1.3754 | -175.1179 | 10.9044 | | | |
| 8 | 1 | Remove Long Term Live | -252.9849 | -86.0459 | -53.7944 | -3.9920 | -153.7675 | 105.1180 | | | |
| 8 | 1 | Remove Long Term Live | -252.9849 | -86.0459 | -53.7826 | -3.9920 | -153.8168 | 105.1180 | | | |
| 8 | 1 | Remove Long Term Live | -252.9849 | -86.0459 | -53.7826 | -3.9920 | -153.8168 | 105.1180 | | | |
| 8 | 1 | Remove Long Term Live | -240.4394 | -87.1850 | -53.4667 | -4.0197 | -152.3119 | 102.0220 | | | |
| 8 | 1 | Remove Long Term Live | -241.5322 | -84.3149 | -52.5579 | -3.9653 | -149.5058 | 104.4366 | | | |
| 8 | 1 | Long Term Performance: | -241.5329 | -83.9384 | -52.4596 | -3.9507 | -149.9157 | 102.8676 | | | |
| 8 | 1 | Long Term Performance: | -241.5329 | -83.9384 | -52.4599 | -3.9507 | -149.9142 | 102.8676 | | | |
| 8 | 1 | Long Term Performance: | -241.5329 | -83.9384 | -52.4599 | -3.9507 | -149.9142 | 102.8676 | | | |
| 8 | 1 | Long Term Performance: | -240.8157 | -84.0035 | -52.4419 | -3.9523 | -149.8280 | 102.6905 | | | |
| 8 | 1 | Long Term Performance: | -232.0734 | -106.9637 | -59.7121 | -4.3876 | -172.2770 | 83.3735 | | | |
| 8 | 1 | Long Term Performance: | -229.8878 | -112.7037 | -61.5297 | -4.4964 | -177.8892 | 78.5443 | | | |
| 8 | 1 | Long Term Performance: | -210.1229 | -136.1639 | -78.2730 | -5.0679 | -235.8598 | 14.7036 | | | |
| 8 | 1 | Strength Check: Strength | -240.8157 | -84.0035 | -52.4419 | -3.9523 | -149.8280 | 102.6904 | | | |
| 8 | 1 | Strength Check: Strength | -240.8157 | -84.0035 | -52.4419 | -3.9523 | -149.8280 | 102.6904 | | | |
| 8 | 1 | Strength Check: Strength | -240.8157 | -84.0035 | -52.4419 | -3.9523 | -149.8280 | 102.6904 | | | |
| 8 | 1 | Strength Check: Strength | -240.8156 | -84.0035 | -52.4419 | -3.9523 | -149.8280 | 102.6904 | | | |
| 8 | 1 | Strength Check: Strength | 33.1754 | -109.0350 | -45.4828 | -4.5477 | -117.2127 | 36.2499 | | | |
| 8 | 1 | Strength Check: Strength | -210.1228 | -136.1639 | -78.2729 | -5.0680 | -235.8599 | 14.7036 | | | |
| 8 | 2 | Set Precast In Place: Set | 0.0000 | 0.0000 | 0.0000 | 0.0000 | 0.0000 | 0.0000 | | | |
| 8 | 2 | Set Precast In Place: Set | 0.3306 | 0.0000 | -46.7253 | 0.0000 | -276.4320 | 0.0000 | | | |
| 8 | 2 | Tension PT: Tension PT: | 0.3341 | 0.0000 | -47.2159 | 0.0000 | -276.4320 | 0.0000 | | | |
| 8 | 2 | Tension PT: Tension PT: | 0.3341 | 0.0000 | -47.2153 | 0.0000 | -276.4320 | 0.0000 | | | |
| 8 | 2 | Tension PT: Tension PT: | 0.3341 | 0.0000 | -47.2153 | 0.0000 | -276.4320 | 0.0000 | | | |
| 8 | 2 | Tension PT: Tension PT: | 0.3341 | 0.0000 | -47.2153 | 0.0000 | -276.4320 | 0.0000 | | | |
| 8 | 2 | Tension PT: Tension PT: | -283.8257 | 26.2605 | -54.4915 | 0.6123 | -340.3304 | 177.3652 | | | |
| 8 | 2 | Add Superstructure: Add | -283.8255 | 26.2647 | -54.5194 | 0.7246 | -340.3304 | 177.3644 | | | |
| 8 | 2 | Add Superstructure: Add | -283.8255 | 26.2647 | -54.5193 | 0.7246 | -340.3304 | 177.3644 | | | |
| 8 | 2 | Add Superstructure: Add | -283.8255 | 26.2647 | -54.5193 | 0.7246 | -340.3304 | 177.3644 | | | |
| 8 | 2 | Add Superstructure: Add | -283.6715 | 26.2505 | -54.5153 | 0.7243 | -340.2958 | 177.2682 | | | |
| 8 | 2 | Add Superstructure: Add | -283.3705 | 26.2505 | -97.0604 | 0.7243 | -476.2237 | 177.2682 | | | |
| 8 | 2 | Backfill to Grade: Backfill | -283.3625 | 26.2531 | -98.1901 | 0.8130 | -476.2237 | 177.2676 | | | |

## RESULT : Member Sectional Forces

| Member | Station | Result Case | Force X (kips) | Force Y (kips) | Force Z (kips) | Moment X (kips-ft) | Moment Y (kips-ft) | Moment Z (kips-ft) |
|---|---|---|---|---|---|---|---|---|
| 8 | 2 | Backfill to Grade: Backfill | -283.3625 | 26.2531 | -98.1893 | 0.8130 | -476.2237 | 177.2676 |
| 8 | 2 | Backfill to Grade: Backfill | -283.3625 | 26.2531 | -98.1893 | 0.8130 | -476.2237 | 177.2676 |
| 8 | 2 | Backfill to Grade: Backfill | -283.1930 | 26.2375 | -98.1849 | 0.8127 | -476.1856 | 177.1616 |
| 8 | 2 | Backfill to Grade: Backfill | -250.3467 | -197.3848 | -97.1517 | 129.3779 | -466.9194 | -535.7358 |
| 8 | 2 | Backfill to Grade: Backfill | -241.6439 | -262.6459 | -98.8358 | 128.9426 | -481.9847 | -738.7816 |
| 8 | 2 | Pave: Pave: Creep | -250.3465 | -201.1114 | -97.1889 | 128.9495 | -466.9194 | -535.7327 |
| 8 | 2 | Pave: Pave: Shrinkage | -250.3465 | -201.1114 | -97.1888 | 128.9495 | -466.9194 | -535.7327 |
| 8 | 2 | Pave: Pave: PT | -250.3465 | -201.1114 | -97.1888 | 128.9495 | -466.9194 | -535.7327 |
| 8 | 2 | Pave: Pave: Other PT | -250.4307 | -201.1037 | -97.1909 | 128.9496 | -466.9384 | -535.6801 |
| 8 | 2 | Pave: Pave: step 1 | -250.3861 | -201.1037 | -103.4939 | 128.9496 | -487.0758 | -535.6801 |
| 8 | 2 | Open Bridge to Traffic: | -250.3852 | -201.7592 | -103.6131 | 128.8563 | -487.0758 | -535.6794 |
| 8 | 2 | Open Bridge to Traffic: | -250.3852 | -201.7592 | -103.6129 | 128.8563 | -487.0758 | -535.6794 |
| 8 | 2 | Open Bridge to Traffic: | -250.3852 | -201.7592 | -103.6129 | 128.8563 | -487.0758 | -535.6794 |
| 8 | 2 | Open Bridge to Traffic: | -250.3706 | -201.7606 | -103.6126 | 128.8563 | -487.0725 | -535.6886 |
| 8 | 2 | Open Bridge to Traffic: | -239.2849 | -283.3369 | -135.0003 | 128.3122 | -599.4595 | -789.4958 |
| 8 | 2 | Open Bridge to Traffic: | -241.5020 | -267.0217 | -128.7227 | 128.4210 | -576.9821 | -738.7344 |
| 8 | 2 | Partial Live Load for | -250.3703 | -202.1962 | -103.6586 | 128.7938 | -487.0725 | -535.6882 |
| 8 | 2 | Partial Live Load for | -250.3703 | -202.1962 | -103.6585 | 128.7938 | -487.0725 | -535.6882 |
| 8 | 2 | Partial Live Load for | -250.3703 | -202.1962 | -103.6585 | 128.7938 | -487.0725 | -535.6882 |
| 8 | 2 | Partial Live Load for | -250.3553 | -202.1975 | -103.6581 | 128.7938 | -487.0692 | -535.6975 |
| 8 | 2 | Partial Live Load for | -249.2468 | -210.3552 | -106.7969 | 128.7394 | -498.3079 | -561.0782 |
| 8 | 2 | Remove Long Term Live | -249.2105 | -232.9615 | -111.9209 | 126.1227 | -498.3079 | -561.0597 |
| 8 | 2 | Remove Long Term Live | -249.2106 | -232.9615 | -111.9090 | 126.1227 | -498.3079 | -561.0597 |
| 8 | 2 | Remove Long Term Live | -249.2106 | -232.9615 | -111.9090 | 126.1227 | -498.3079 | -561.0597 |
| 8 | 2 | Remove Long Term Live | -236.6892 | -234.1006 | -111.5934 | 126.0951 | -495.4922 | -568.8867 |
| 8 | 2 | Remove Long Term Live | -237.7977 | -225.9429 | -108.4546 | 126.1495 | -484.2535 | -543.5060 |
| 8 | 2 | Long Term Performance: | -237.7984 | -225.5664 | -108.3562 | 126.1642 | -484.2535 | -543.5061 |
| 8 | 2 | Long Term Performance: | -237.7984 | -225.5664 | -108.3566 | 126.1642 | -484.2535 | -543.5061 |
| 8 | 2 | Long Term Performance: | -237.7984 | -225.5664 | -108.3566 | 126.1642 | -484.2535 | -543.5061 |
| 8 | 2 | Long Term Performance: | -237.0800 | -225.6315 | -108.3385 | 126.1626 | -484.0920 | -543.9552 |
| 8 | 2 | Long Term Performance: | -228.2114 | -290.8925 | -133.4487 | 125.7273 | -574.0015 | -747.0010 |
| 8 | 2 | Long Term Performance: | -225.9943 | -307.2078 | -139.7263 | 125.6185 | -596.4790 | -797.7625 |
| 8 | 2 | Long Term Performance: | -206.0036 | -330.6680 | -188.3745 | 125.0470 | -790.6847 | -959.3557 |
| 8 | 2 | Strength Check: Strength | -237.0800 | -225.6315 | -108.3385 | 126.1625 | -484.0920 | -543.9552 |

## RESULT : Member Sectional Forces

| Member | Station | Result Case | Force X (kips) | Force Y (kips) | Force Z (kips) | Moment X (kips-ft) | Moment Y (kips-ft) | Moment Z (kips-ft) |
|---|---|---|---|---|---|---|---|---|
| 8 | 2 | Strength Check: Strength | -237.0800 | -225.6315 | -108.3385 | 126.1625 | -484.0920 | -543.9552 |
| 8 | 2 | Strength Check: Strength | -237.0800 | -225.6315 | -108.3385 | 126.1625 | -484.0920 | -543.9552 |
| 8 | 2 | Strength Check: Strength | -237.0799 | -225.6315 | -108.3385 | 126.1625 | -484.0920 | -543.9552 |
| 8 | 2 | Strength Check: Strength | 33.5711 | -250.6630 | -101.4031 | 125.5800 | -423.2313 | -712.8762 |
| 8 | 2 | Strength Check: Strength | -206.0036 | -330.6680 | -188.3745 | 125.0469 | -790.6847 | -959.3557 |
| 9 | 0 | Set Precast In Place: Set | 0.0000 | 0.0000 | 0.0000 | 0.0000 | 0.0000 | 0.0000 |
| 9 | 0 | Set Precast In Place: Set | -0.3747 | 0.0000 | 52.9560 | -117.5204 | -276.4320 | 0.8315 |
| 9 | 0 | Tension PT: Tension PT: | -0.3747 | 0.0000 | 52.9560 | -117.5204 | -276.4320 | 0.8315 |
| 9 | 0 | Tension PT: Tension PT: | -0.3747 | 0.0000 | 52.9560 | -117.5204 | -276.4320 | 0.8315 |
| 9 | 0 | Tension PT: Tension PT: | -0.3747 | 0.0000 | 52.9560 | -117.5204 | -276.4320 | 0.8315 |
| 9 | 0 | Tension PT: Tension PT: | -0.3747 | 0.0000 | 52.9560 | -117.5204 | -276.4320 | 0.8315 |
| 9 | 0 | Tension PT: Tension PT: | -284.5717 | 0.0001 | 50.9451 | -116.2654 | -340.3304 | 178.1922 |
| 9 | 0 | Add Superstructure: Add | -284.5717 | 0.0001 | 50.9451 | -116.2654 | -340.3304 | 178.1922 |
| 9 | 0 | Add Superstructure: Add | -284.5717 | 0.0001 | 50.9451 | -116.2654 | -340.3304 | 178.1922 |
| 9 | 0 | Add Superstructure: Add | -284.5717 | 0.0001 | 50.9451 | -116.2654 | -340.3304 | 178.1922 |
| 9 | 0 | Add Superstructure: Add | -284.4178 | 0.0001 | 50.9462 | -116.2661 | -340.2958 | 178.0960 |
| 9 | 0 | Add Superstructure: Add | -284.7431 | 0.0001 | 96.9233 | -116.2661 | -476.2237 | 178.0960 |
| 9 | 0 | Backfill to Grade: Backfill | -284.7431 | 0.0001 | 96.9233 | -116.2661 | -476.2237 | 178.0960 |
| 9 | 0 | Backfill to Grade: Backfill | -284.7431 | 0.0001 | 96.9233 | -116.2661 | -476.2237 | 178.0960 |
| 9 | 0 | Backfill to Grade: Backfill | -284.7431 | 0.0001 | 96.9233 | -116.2661 | -476.2237 | 178.0960 |
| 9 | 0 | Backfill to Grade: Backfill | -284.5735 | 0.0001 | 96.9245 | -116.2669 | -476.1856 | 177.9900 |
| 9 | 0 | Backfill to Grade: Backfill | -251.7216 | 185.2560 | 97.1570 | -283.0017 | -466.9194 | -532.8179 |
| 9 | 0 | Backfill to Grade: Backfill | -243.0312 | 240.1646 | 97.2185 | -278.0243 | -481.9847 | -735.9019 |
| 9 | 0 | Pave: Pave: Creep | -251.7216 | 185.2560 | 97.1570 | -283.0017 | -466.9194 | -532.8179 |
| 9 | 0 | Pave: Pave: Shrinkage | -251.7216 | 185.2560 | 97.1570 | -283.0017 | -466.9194 | -532.8179 |
| 9 | 0 | Pave: Pave: PT | -251.7216 | 185.2560 | 97.1570 | -283.0017 | -466.9194 | -532.8179 |
| 9 | 0 | Pave: Pave: Other PT | -251.8058 | 185.2560 | 97.1564 | -283.0013 | -466.9384 | -532.7653 |
| 9 | 0 | Pave: Pave: step 1 | -251.8540 | 185.2560 | 103.9678 | -283.0013 | -487.0758 | -532.7653 |
| 9 | 0 | Open Bridge to Traffic: | -251.8540 | 185.2560 | 103.9678 | -283.0013 | -487.0758 | -532.7653 |
| 9 | 0 | Open Bridge to Traffic: | -251.8540 | 185.2560 | 103.9678 | -283.0013 | -487.0758 | -532.7653 |
| 9 | 0 | Open Bridge to Traffic: | -251.8540 | 185.2560 | 103.9678 | -283.0013 | -487.0758 | -532.7653 |
| 9 | 0 | Open Bridge to Traffic: | -251.8394 | 185.2560 | 103.9679 | -283.0014 | -487.0725 | -532.7744 |
| 9 | 0 | Open Bridge to Traffic: | -241.2002 | 253.8917 | 135.6895 | -276.7797 | -599.4595 | -786.6295 |
| 9 | 0 | Open Bridge to Traffic: | -243.3281 | 240.1646 | 129.3452 | -278.0240 | -576.9821 | -735.8585 |

## RESULT : Member Sectional Forces

| Member | Station | Result Case | Force X (kips) | Force Y (kips) | Force Z (kips) | Moment X (kips-ft) | Moment Y (kips-ft) | Moment Z (kips-ft) |
|---|---|---|---|---|---|---|---|---|
| 9 | 0 | Partial Live Load for | -251.8394 | 185.2560 | 103.9679 | -283.0014 | -487.0725 | -532.7744 |
| 9 | 0 | Partial Live Load for | -251.8394 | 185.2560 | 103.9679 | -283.0014 | -487.0725 | -532.7744 |
| 9 | 0 | Partial Live Load for | -251.8394 | 185.2560 | 103.9679 | -283.0014 | -487.0725 | -532.7744 |
| 9 | 0 | Partial Live Load for | -251.8244 | 185.2560 | 103.9680 | -283.0015 | -487.0692 | -532.7837 |
| 9 | 0 | Partial Live Load for | -250.7605 | 192.1195 | 107.1402 | -282.3793 | -498.3079 | -558.1692 |
| 9 | 0 | Remove Long Term Live | -250.7605 | 192.1195 | 107.1402 | -282.3793 | -498.3079 | -558.1692 |
| 9 | 0 | Remove Long Term Live | -250.7605 | 192.1195 | 107.1402 | -282.3793 | -498.3079 | -558.1692 |
| 9 | 0 | Remove Long Term Live | -250.7605 | 192.1195 | 107.1402 | -282.3793 | -498.3079 | -558.1692 |
| 9 | 0 | Remove Long Term Live | -238.2375 | 192.1195 | 107.2288 | -282.4347 | -495.4922 | -565.9961 |
| 9 | 0 | Remove Long Term Live | -239.3014 | 185.2560 | 104.0566 | -283.0568 | -484.2535 | -540.6106 |
| 9 | 0 | Long Term Performance: | -239.3014 | 185.2560 | 104.0566 | -283.0568 | -484.2535 | -540.6106 |
| 9 | 0 | Long Term Performance: | -239.3014 | 185.2560 | 104.0566 | -283.0568 | -484.2535 | -540.6106 |
| 9 | 0 | Long Term Performance: | -239.3014 | 185.2560 | 104.0566 | -283.0568 | -484.2535 | -540.6106 |
| 9 | 0 | Long Term Performance: | -238.5829 | 185.2560 | 104.0617 | -283.0600 | -484.0920 | -541.0597 |
| 9 | 0 | Long Term Performance: | -230.0716 | 240.1646 | 129.4390 | -278.0826 | -574.0015 | -744.1437 |
| 9 | 0 | Long Term Performance: | -227.9437 | 253.8917 | 135.7833 | -276.8383 | -596.4790 | -794.9147 |
| 9 | 0 | Long Term Performance: | -208.6653 | 261.0423 | 187.7949 | -303.4017 | -790.6847 | -956.3241 |
| 9 | 0 | Strength Check: Strength | -238.5829 | 185.2560 | 104.0617 | -283.0600 | -484.0920 | -541.0597 |
| 9 | 0 | Strength Check: Strength | -238.5829 | 185.2560 | 104.0617 | -283.0600 | -484.0920 | -541.0597 |
| 9 | 0 | Strength Check: Strength | -238.5829 | 185.2560 | 104.0617 | -283.0600 | -484.0920 | -541.0597 |
| 9 | 0 | Strength Check: Strength | -238.5828 | 185.2560 | 104.0617 | -283.0600 | -484.0920 | -541.0597 |
| 9 | 0 | Strength Check: Strength | 32.1037 | 185.2559 | 105.9770 | -284.2552 | -423.2313 | -709.9763 |
| 9 | 0 | Strength Check: Strength | -208.6653 | 261.0423 | 187.7949 | -303.4017 | -790.6847 | -956.3241 |
| 9 | 1 | Set Precast In Place: Set | 0.0000 | 0.0000 | 0.0000 | 0.0000 | 0.0000 | 0.0000 |
| 9 | 1 | Set Precast In Place: Set | -0.2796 | 0.0000 | 39.5168 | -117.5204 | -139.7376 | 0.8315 |
| 9 | 1 | Tension PT: Tension PT: | -0.2796 | 0.0000 | 39.5168 | -117.5204 | -139.7376 | 0.8315 |
| 9 | 1 | Tension PT: Tension PT: | -0.2796 | 0.0000 | 39.5168 | -117.5204 | -139.7376 | 0.8315 |
| 9 | 1 | Tension PT: Tension PT: | -0.2796 | 0.0000 | 39.5168 | -117.5204 | -139.7376 | 0.8315 |
| 9 | 1 | Tension PT: Tension PT: | -0.2796 | 0.0000 | 39.5168 | -117.5204 | -139.7376 | 0.8315 |
| 9 | 1 | Tension PT: Tension PT: | -282.5361 | 0.0001 | 37.5197 | -116.2741 | -209.1039 | 176.9630 |
| 9 | 1 | Add Superstructure: Add | -282.5361 | 0.0001 | 37.5197 | -116.2741 | -209.1039 | 176.9630 |
| 9 | 1 | Add Superstructure: Add | -282.5361 | 0.0001 | 37.5197 | -116.2741 | -209.1039 | 176.9630 |
| 9 | 1 | Add Superstructure: Add | -282.5361 | 0.0001 | 37.5197 | -116.2741 | -209.1039 | 176.9630 |
| 9 | 1 | Add Superstructure: Add | -282.3844 | 0.0001 | 37.5207 | -116.2748 | -209.0666 | 176.8682 |

## RESULT : Member Sectional Forces

| Member | Station | Result Case | Force X (kips) | Force Y (kips) | Force Z (kips) | Moment X (kips-ft) | Moment Y (kips-ft) | Moment Z (kips-ft) |
|---|---|---|---|---|---|---|---|---|
| 9 | 1 | Add Superstructure: Add | -282.5471 | 0.0001 | 60.5093 | -116.2748 | -243.0486 | 176.8682 |
| 9 | 1 | Backfill to Grade: Backfill | -282.5471 | 0.0001 | 60.5093 | -116.2748 | -243.0486 | 176.8682 |
| 9 | 1 | Backfill to Grade: Backfill | -282.5471 | 0.0001 | 60.5093 | -116.2748 | -243.0486 | 176.8682 |
| 9 | 1 | Backfill to Grade: Backfill | -282.5471 | 0.0001 | 60.5093 | -116.2748 | -243.0486 | 176.8682 |
| 9 | 1 | Backfill to Grade: Backfill | -282.3790 | 0.0001 | 60.5105 | -116.2756 | -243.0072 | 176.7631 |
| 9 | 1 | Backfill to Grade: Backfill | -249.5270 | 84.5010 | 60.7429 | -189.1439 | -233.0538 | -135.2869 |
| 9 | 1 | Backfill to Grade: Backfill | -240.8366 | 109.3251 | 60.8044 | -184.1665 | -247.9373 | -220.5093 |
| 9 | 1 | Pave: Pave: Creep | -249.5270 | 84.5010 | 60.7429 | -189.1439 | -233.0538 | -135.2869 |
| 9 | 1 | Pave: Pave: Shrinkage | -249.5270 | 84.5010 | 60.7429 | -189.1439 | -233.0538 | -135.2869 |
| 9 | 1 | Pave: Pave: PT | -249.5270 | 84.5010 | 60.7429 | -189.1439 | -233.0538 | -135.2869 |
| 9 | 1 | Pave: Pave: Other PT | -249.6109 | 84.5010 | 60.7424 | -189.1435 | -233.0745 | -135.2346 |
| 9 | 1 | Pave: Pave: step 1 | -249.6350 | 84.5010 | 64.1481 | -189.1435 | -238.1088 | -135.2346 |
| 9 | 1 | Open Bridge to Traffic: | -249.6350 | 84.5010 | 64.1481 | -189.1435 | -238.1088 | -135.2346 |
| 9 | 1 | Open Bridge to Traffic: | -249.6350 | 84.5010 | 64.1481 | -189.1435 | -238.1088 | -135.2346 |
| 9 | 1 | Open Bridge to Traffic: | -249.6350 | 84.5010 | 64.1481 | -189.1435 | -238.1088 | -135.2346 |
| 9 | 1 | Open Bridge to Traffic: | -249.6204 | 84.5010 | 64.1482 | -189.1436 | -238.1052 | -135.2436 |
| 9 | 1 | Open Bridge to Traffic: | -238.8694 | 115.5311 | 80.0474 | -182.9219 | -280.0984 | -241.7715 |
| 9 | 1 | Open Bridge to Traffic: | -241.0196 | 109.3251 | 76.8676 | -184.1662 | -271.6998 | -220.4660 |
| 9 | 1 | Partial Live Load for | -249.6204 | 84.5010 | 64.1482 | -189.1436 | -238.1052 | -135.2436 |
| 9 | 1 | Partial Live Load for | -249.6204 | 84.5010 | 64.1482 | -189.1436 | -238.1052 | -135.2436 |
| 9 | 1 | Partial Live Load for | -249.6204 | 84.5010 | 64.1482 | -189.1436 | -238.1052 | -135.2436 |
| 9 | 1 | Partial Live Load for | -249.6057 | 84.5010 | 64.1483 | -189.1437 | -238.1016 | -135.2529 |
| 9 | 1 | Partial Live Load for | -248.5306 | 87.6040 | 65.7382 | -188.5215 | -242.3009 | -145.9057 |
| 9 | 1 | Remove Long Term Live | -248.5306 | 87.6040 | 65.7382 | -188.5215 | -242.3009 | -145.9057 |
| 9 | 1 | Remove Long Term Live | -248.5306 | 87.6040 | 65.7382 | -188.5215 | -242.3009 | -145.9057 |
| 9 | 1 | Remove Long Term Live | -248.5306 | 87.6040 | 65.7382 | -188.5215 | -242.3009 | -145.9057 |
| 9 | 1 | Remove Long Term Live | -236.0316 | 87.6040 | 65.8266 | -188.5768 | -239.2292 | -153.7174 |
| 9 | 1 | Remove Long Term Live | -237.1067 | 84.5010 | 64.2367 | -189.1990 | -235.0299 | -143.0646 |
| 9 | 1 | Long Term Performance: | -237.1067 | 84.5010 | 64.2367 | -189.1990 | -235.0299 | -143.0646 |
| 9 | 1 | Long Term Performance: | -237.1067 | 84.5010 | 64.2367 | -189.1990 | -235.0299 | -143.0646 |
| 9 | 1 | Long Term Performance: | -237.1067 | 84.5010 | 64.2367 | -189.1990 | -235.0299 | -143.0646 |
| 9 | 1 | Long Term Performance: | -236.3869 | 84.5010 | 64.2418 | -189.2021 | -234.8531 | -143.5145 |
| 9 | 1 | Long Term Performance: | -227.7861 | 109.3251 | 76.9612 | -184.2247 | -268.4476 | -228.7368 |
| 9 | 1 | Long Term Performance: | -225.6359 | 115.5311 | 80.1411 | -182.9804 | -276.8463 | -250.0424 |

## RESULT : Member Sectional Forces

| Member | Station | | Result Case | Force X (kips) | Force Y (kips) | Force Z (kips) | Moment X (kips-ft) | Moment Y (kips-ft) | Moment Z (kips-ft) |
|---|---|---|---|---|---|---|---|---|---|
| 9 | 1 | Long Term Performance: | -206.1970 | 122.6816 | 109.4761 | -209.5438 | -350.8045 | -390.3117 | |
| 9 | 1 | Strength Check: Strength | -236.3869 | 84.5010 | 64.2418 | -189.2021 | -234.8531 | -143.5145 | |
| 9 | 1 | Strength Check: Strength | -236.3869 | 84.5010 | 64.2418 | -189.2021 | -234.8531 | -143.5145 | |
| 9 | 1 | Strength Check: Strength | -236.3869 | 84.5010 | 64.2418 | -189.2021 | -234.8531 | -143.5145 | |
| 9 | 1 | Strength Check: Strength | -236.3869 | 84.5010 | 64.2418 | -189.2021 | -234.8531 | -143.5145 | |
| 9 | 1 | Strength Check: Strength | 32.3856 | 84.5010 | 66.1436 | -190.3887 | -168.8005 | -311.2185 | |
| 9 | 1 | Strength Check: Strength | -206.1969 | 122.6816 | 109.4761 | -209.5438 | -350.8045 | -390.3118 | |
| 9 | 2 | Set Precast In Place: Set | 0.0000 | 0.0000 | 0.0000 | 0.0000 | 0.0000 | 0.0000 | |
| 9 | 2 | Set Precast In Place: Set | -0.1845 | 0.0000 | 26.0777 | -117.5204 | -42.7750 | 0.8315 | |
| 9 | 2 | Tension PT: Tension PT: | -0.1845 | 0.0000 | 26.0777 | -117.5204 | -42.7750 | 0.8315 | |
| 9 | 2 | Tension PT: Tension PT: | -0.1845 | 0.0000 | 26.0777 | -117.5204 | -42.7750 | 0.8315 | |
| 9 | 2 | Tension PT: Tension PT: | -0.1845 | 0.0000 | 26.0777 | -117.5204 | -42.7750 | 0.8315 | |
| 9 | 2 | Tension PT: Tension PT: | -0.1845 | 0.0000 | 26.0777 | -117.5204 | -42.7750 | 0.8315 | |
| 9 | 2 | Tension PT: Tension PT: | -280.0009 | 0.0001 | 24.0978 | -116.2829 | -117.3946 | 175.7208 | |
| 9 | 2 | Add Superstructure: Add | -280.0009 | 0.0001 | 24.0978 | -116.2829 | -117.3946 | 175.7208 | |
| 9 | 2 | Add Superstructure: Add | -280.0009 | 0.0001 | 24.0978 | -116.2829 | -117.3946 | 175.7208 | |
| 9 | 2 | Add Superstructure: Add | -280.0009 | 0.0001 | 24.0978 | -116.2829 | -117.3946 | 175.7208 | |
| 9 | 2 | Add Superstructure: Add | -279.8952 | 0.0001 | 24.0985 | -116.2834 | -117.3664 | 175.6546 | |
| 9 | 2 | Add Superstructure: Add | -279.8952 | 0.0001 | 24.0985 | -116.2834 | -117.3664 | 175.6546 | |
| 9 | 2 | Backfill to Grade: Backfill | -279.8952 | 0.0001 | 24.0985 | -116.2834 | -117.3664 | 175.6546 | |
| 9 | 2 | Backfill to Grade: Backfill | -279.8952 | 0.0001 | 24.0985 | -116.2834 | -117.3664 | 175.6546 | |
| 9 | 2 | Backfill to Grade: Backfill | -279.8952 | 0.0001 | 24.0985 | -116.2834 | -117.3664 | 175.6546 | |
| 9 | 2 | Backfill to Grade: Backfill | -279.7465 | 0.0001 | 24.0996 | -116.2841 | -117.3267 | 175.5617 | |
| 9 | 2 | Backfill to Grade: Backfill | -246.8946 | 11.9575 | 24.3320 | -121.5686 | -106.6861 | -23.9281 | |
| 9 | 2 | Backfill to Grade: Backfill | -238.2042 | 15.1206 | 24.3935 | -116.5912 | -121.3878 | -76.7449 | |
| 9 | 2 | Pave: Pave: Creep | -246.8946 | 11.9575 | 24.3320 | -121.5686 | -106.6861 | -23.9281 | |
| 9 | 2 | Pave: Pave: Shrinkage | -246.8946 | 11.9575 | 24.3320 | -121.5686 | -106.6861 | -23.9281 | |
| 9 | 2 | Pave: Pave: PT | -246.8946 | 11.9575 | 24.3320 | -121.5686 | -106.6861 | -23.9281 | |
| 9 | 2 | Pave: Pave: Other PT | -246.9266 | 11.9575 | 24.3318 | -121.5684 | -106.6946 | -23.9081 | |
| 9 | 2 | Pave: Pave: step 1 | -246.9266 | 11.9575 | 24.3318 | -121.5684 | -106.6946 | -23.9081 | |
| 9 | 2 | Open Bridge to Traffic: | -246.9266 | 11.9575 | 24.3318 | -121.5684 | -106.6946 | -23.9081 | |
| 9 | 2 | Open Bridge to Traffic: | -246.9266 | 11.9575 | 24.3318 | -121.5684 | -106.6946 | -23.9081 | |
| 9 | 2 | Open Bridge to Traffic: | -246.9266 | 11.9575 | 24.3318 | -121.5684 | -106.6946 | -23.9081 | |
| 9 | 2 | Open Bridge to Traffic: | -246.9105 | 11.9575 | 24.3319 | -121.5685 | -106.6903 | -23.9181 | |

## RESULT : Member Sectional Forces

| Member | Station | Result Case | Force X (kips) | Force Y (kips) | Force Z (kips) | Moment X (kips-ft) | Moment Y (kips-ft) | Moment Z (kips-ft) |
|---|---|---|---|---|---|---|---|---|
| 9 | 2 | Open Bridge to Traffic: | -236.0474 | 15.9114 | 24.4088 | -115.3468 | -125.0674 | -89.9392 |
| 9 | 2 | Open Bridge to Traffic: | -238.2200 | 15.1206 | 24.3934 | -116.5911 | -121.3920 | -76.7350 |
| 9 | 2 | Partial Live Load for | -246.9105 | 11.9575 | 24.3319 | -121.5685 | -106.6903 | -23.9181 |
| 9 | 2 | Partial Live Load for | -246.9105 | 11.9575 | 24.3319 | -121.5685 | -106.6903 | -23.9181 |
| 9 | 2 | Partial Live Load for | -246.9105 | 11.9575 | 24.3319 | -121.5685 | -106.6903 | -23.9181 |
| 9 | 2 | Partial Live Load for | -246.8943 | 11.9575 | 24.3320 | -121.5686 | -106.6860 | -23.9282 |
| 9 | 2 | Partial Live Load for | -245.8080 | 12.3529 | 24.3397 | -120.9464 | -108.5237 | -30.5303 |
| 9 | 2 | Remove Long Term Live | -245.8080 | 12.3529 | 24.3397 | -120.9464 | -108.5237 | -30.5303 |
| 9 | 2 | Remove Long Term Live | -245.8080 | 12.3529 | 24.3397 | -120.9464 | -108.5237 | -30.5303 |
| 9 | 2 | Remove Long Term Live | -245.8080 | 12.3529 | 24.3397 | -120.9464 | -108.5237 | -30.5303 |
| 9 | 2 | Remove Long Term Live | -232.7511 | 12.3529 | 24.4321 | -121.0041 | -105.0418 | -38.6908 |
| 9 | 2 | Remove Long Term Live | -233.8374 | 11.9575 | 24.4244 | -121.6263 | -103.2041 | -32.0887 |
| 9 | 2 | Long Term Performance: | -233.8374 | 11.9575 | 24.4244 | -121.6263 | -103.2041 | -32.0887 |
| 9 | 2 | Long Term Performance: | -233.8374 | 11.9575 | 24.4244 | -121.6263 | -103.2041 | -32.0887 |
| 9 | 2 | Long Term Performance: | -233.8374 | 11.9575 | 24.4244 | -121.6263 | -103.2041 | -32.0887 |
| 9 | 2 | Long Term Performance: | -233.3094 | 11.9575 | 24.4282 | -121.6287 | -103.0633 | -32.4188 |
| 9 | 2 | Long Term Performance: | -224.6190 | 15.1206 | 24.4896 | -116.6513 | -117.7650 | -85.2356 |
| 9 | 2 | Long Term Performance: | -222.4464 | 15.9114 | 24.5050 | -115.4069 | -121.4404 | -98.4398 |
| 9 | 2 | Long Term Performance: | -202.8470 | 23.0619 | 31.1634 | -141.9703 | -142.1927 | -217.5691 |
| 9 | 2 | Strength Check: Strength | -233.3094 | 11.9575 | 24.4282 | -121.6287 | -103.0633 | -32.4188 |
| 9 | 2 | Strength Check: Strength | -233.3094 | 11.9575 | 24.4282 | -121.6287 | -103.0633 | -32.4188 |
| 9 | 2 | Strength Check: Strength | -233.3094 | 11.9575 | 24.4282 | -121.6287 | -103.0633 | -32.4188 |
| 9 | 2 | Strength Check: Strength | -233.3094 | 11.9575 | 24.4282 | -121.6287 | -103.0633 | -32.4188 |
| 9 | 2 | Strength Check: Strength | 32.6674 | 11.9574 | 26.3101 | -122.8049 | -32.1344 | -198.6583 |
| 9 | 2 | Strength Check: Strength | -202.8470 | 23.0619 | 31.1634 | -141.9703 | -142.1927 | -217.5691 |
| 10 | 0 | Set Precast In Place: Set | 0.0000 | 0.0000 | 0.0000 | 0.0000 | 0.0000 | 0.0000 |
| 10 | 0 | Set Precast In Place: Set | 0.0000 | 0.0000 | 26.0783 | 0.0000 | -125.0657 | 0.0000 |
| 10 | 0 | Tension PT: Tension PT: | 0.0000 | 0.0000 | 26.0783 | 0.0000 | -125.0657 | 0.0000 |
| 10 | 0 | Tension PT: Tension PT: | 0.0000 | 0.0000 | 26.0783 | 0.0000 | -125.0657 | 0.0000 |
| 10 | 0 | Tension PT: Tension PT: | 0.0000 | 0.0000 | 26.0783 | 0.0000 | -125.0657 | 0.0000 |
| 10 | 0 | Tension PT: Tension PT: | 0.0000 | 0.0000 | 26.0783 | 0.0000 | -125.0657 | 0.0000 |
| 10 | 0 | Tension PT: Tension PT: | -95.7053 | -262.9480 | 26.0783 | 514.9398 | -312.4886 | 174.8936 |
| 10 | 0 | Add Superstructure: Add | -95.7053 | -262.9480 | 26.0783 | 514.9398 | -312.4886 | 174.8936 |
| 10 | 0 | Add Superstructure: Add | -95.7053 | -262.9480 | 26.0783 | 514.9398 | -312.4886 | 174.8936 |

## RESULT : Member Sectional Forces

| Member | Station | Result Case | Force X (kips) | Force Y (kips) | Force Z (kips) | Moment X (kips-ft) | Moment Y (kips-ft) | Moment Z (kips-ft) |
|---|---|---|---|---|---|---|---|---|
| 10 | 0 | Add Superstructure: Add | -95.7053 | -262.9480 | 26.0783 | 514.9398 | -312.4886 | 174.8936 |
| 10 | 0 | Add Superstructure: Add | -95.6691 | -262.8486 | 26.0783 | 514.7452 | -312.4178 | 174.8275 |
| 10 | 0 | Add Superstructure: Add | -95.6691 | -262.8486 | 26.0783 | 514.7452 | -312.4178 | 174.8275 |
| 10 | 0 | Backfill to Grade: Backfill | -95.6691 | -262.8486 | 26.0783 | 514.7452 | -312.4178 | 174.8275 |
| 10 | 0 | Backfill to Grade: Backfill | -95.6691 | -262.8486 | 26.0783 | 514.7452 | -312.4178 | 174.8275 |
| 10 | 0 | Backfill to Grade: Backfill | -95.6691 | -262.8486 | 26.0783 | 514.7452 | -312.4178 | 174.8275 |
| 10 | 0 | Backfill to Grade: Backfill | -95.6183 | -262.7089 | 26.0783 | 514.4716 | -312.3182 | 174.7346 |
| 10 | 0 | Backfill to Grade: Backfill | -95.6183 | -227.7477 | 26.0783 | 444.0054 | -312.3182 | -24.7876 |
| 10 | 0 | Backfill to Grade: Backfill | -95.6183 | -218.4993 | 26.0783 | 444.0054 | -312.3182 | -77.5679 |
| 10 | 0 | Pave: Pave: Creep | -95.6183 | -227.7477 | 26.0783 | 444.0054 | -312.3182 | -24.7876 |
| 10 | 0 | Pave: Pave: Shrinkage | -95.6183 | -227.7477 | 26.0783 | 444.0054 | -312.3182 | -24.7876 |
| 10 | 0 | Pave: Pave: PT | -95.6183 | -227.7477 | 26.0783 | 444.0054 | -312.3182 | -24.7876 |
| 10 | 0 | Pave: Pave: Other PT | -95.6292 | -227.7778 | 26.0783 | 444.0644 | -312.3397 | -24.7676 |
| 10 | 0 | Pave: Pave: step 1 | -95.6292 | -227.7778 | 26.0783 | 444.0644 | -312.3397 | -24.7676 |
| 10 | 0 | Open Bridge to Traffic: | -95.6292 | -227.7778 | 26.0783 | 444.0644 | -312.3397 | -24.7676 |
| 10 | 0 | Open Bridge to Traffic: | -95.6292 | -227.7778 | 26.0783 | 444.0644 | -312.3397 | -24.7676 |
| 10 | 0 | Open Bridge to Traffic: | -95.6292 | -227.7778 | 26.0783 | 444.0644 | -312.3397 | -24.7676 |
| 10 | 0 | Open Bridge to Traffic: | -95.6237 | -227.7626 | 26.0783 | 444.0347 | -312.3288 | -24.7777 |
| 10 | 0 | Open Bridge to Traffic: | -95.6237 | -216.2022 | 26.0783 | 444.0347 | -312.3288 | -90.7531 |
| 10 | 0 | Open Bridge to Traffic: | -95.6237 | -218.5143 | 26.0783 | 444.0347 | -312.3288 | -77.5580 |
| 10 | 0 | Partial Live Load for | -95.6237 | -227.7626 | 26.0783 | 444.0347 | -312.3288 | -24.7777 |
| 10 | 0 | Partial Live Load for | -95.6237 | -227.7626 | 26.0783 | 444.0347 | -312.3288 | -24.7777 |
| 10 | 0 | Partial Live Load for | -95.6237 | -227.7626 | 26.0783 | 444.0347 | -312.3288 | -24.7777 |
| 10 | 0 | Partial Live Load for | -95.6182 | -227.7475 | 26.0783 | 444.0050 | -312.3180 | -24.7878 |
| 10 | 0 | Partial Live Load for | -95.6182 | -226.5914 | 26.0783 | 444.0050 | -312.3180 | -31.3853 |
| 10 | 0 | Remove Long Term Live | -95.6182 | -226.5914 | 26.0783 | 444.0050 | -312.3180 | -31.3853 |
| 10 | 0 | Remove Long Term Live | -95.6182 | -226.5914 | 26.0783 | 444.0050 | -312.3180 | -31.3853 |
| 10 | 0 | Remove Long Term Live | -95.6182 | -226.5914 | 26.0783 | 444.0050 | -312.3180 | -31.3853 |
| 10 | 0 | Remove Long Term Live | -91.1524 | -214.3217 | 26.0783 | 419.9766 | -303.5724 | -39.5460 |
| 10 | 0 | Remove Long Term Live | -91.1524 | -215.4777 | 26.0783 | 419.9766 | -303.5724 | -32.9485 |
| 10 | 0 | Long Term Performance: | -91.1524 | -215.4777 | 26.0783 | 419.9766 | -303.5724 | -32.9485 |
| 10 | 0 | Long Term Performance: | -91.1524 | -215.4777 | 26.0783 | 419.9766 | -303.5724 | -32.9485 |
| 10 | 0 | Long Term Performance: | -91.1524 | -215.4777 | 26.0783 | 419.9766 | -303.5724 | -32.9485 |
| 10 | 0 | Long Term Performance: | -90.9718 | -214.9815 | 26.0783 | 419.0049 | -303.2188 | -33.2785 |

## RESULT : Member Sectional Forces

| Member | Station | Result Case | Force X (kips) | Force Y (kips) | Force Z (kips) | Moment X (kips-ft) | Moment Y (kips-ft) | Moment Z (kips-ft) |
|---|---|---|---|---|---|---|---|---|
| 10 | 0 | Long Term Performance: | -90.9718 | -205.7331 | 26.0783 | 419.0049 | -303.2188 | -86.0588 |
| 10 | 0 | Long Term Performance: | -90.9718 | -203.4210 | 26.0783 | 419.0049 | -303.2188 | -99.2539 |
| 10 | 0 | Long Term Performance: | -90.9718 | -182.5142 | 32.5979 | 394.3418 | -334.4852 | -218.5682 |
| 10 | 0 | Strength Check: Strength | -90.9718 | -214.9815 | 26.0783 | 419.0049 | -303.2188 | -33.2785 |
| 10 | 0 | Strength Check: Strength | -90.9718 | -214.9815 | 26.0783 | 419.0049 | -303.2188 | -33.2785 |
| 10 | 0 | Strength Check: Strength | -90.9718 | -214.9815 | 26.0783 | 419.0049 | -303.2188 | -33.2785 |
| 10 | 0 | Strength Check: Strength | -90.9717 | -214.9815 | 26.0783 | 419.0048 | -303.2187 | -33.2786 |
| 10 | 0 | Strength Check: Strength | 0.0000 | 34.9612 | 26.0783 | -70.4662 | -125.0657 | -199.5222 |
| 10 | 0 | Strength Check: Strength | -90.9717 | -182.5142 | 32.5979 | 394.3417 | -334.4851 | -218.5682 |
| 10 | 1 | Set Precast In Place: Set | 0.0000 | 0.0000 | 0.0000 | 0.0000 | 0.0000 | 0.0000 |
| 10 | 1 | Set Precast In Place: Set | 0.0000 | 0.0000 | 13.0392 | 0.0000 | -31.2664 | 0.0000 |
| 10 | 1 | Tension PT: Tension PT: | 0.0000 | 0.0000 | 13.0392 | 0.0000 | -31.2664 | 0.0000 |
| 10 | 1 | Tension PT: Tension PT: | 0.0000 | 0.0000 | 13.0392 | 0.0000 | -31.2664 | 0.0000 |
| 10 | 1 | Tension PT: Tension PT: | 0.0000 | 0.0000 | 13.0392 | 0.0000 | -31.2664 | 0.0000 |
| 10 | 1 | Tension PT: Tension PT: | 0.0000 | 0.0000 | 13.0392 | 0.0000 | -31.2664 | 0.0000 |
| 10 | 1 | Tension PT: Tension PT: | 0.0000 | 0.0000 | 13.0392 | 0.0000 | -31.2664 | 0.0000 |
| 10 | 1 | Add Superstructure: Add | 0.0000 | 0.0000 | 13.0392 | 0.0000 | -31.2664 | 0.0000 |
| 10 | 1 | Add Superstructure: Add | 0.0000 | 0.0000 | 13.0392 | 0.0000 | -31.2664 | 0.0000 |
| 10 | 1 | Add Superstructure: Add | 0.0000 | 0.0000 | 13.0392 | 0.0000 | -31.2664 | 0.0000 |
| 10 | 1 | Add Superstructure: Add | 0.0000 | 0.0000 | 13.0392 | 0.0000 | -31.2664 | 0.0000 |
| 10 | 1 | Add Superstructure: Add | 0.0000 | 0.0000 | 13.0392 | 0.0000 | -31.2664 | 0.0000 |
| 10 | 1 | Backfill to Grade: Backfill | 0.0000 | 0.0000 | 13.0392 | 0.0000 | -31.2664 | 0.0000 |
| 10 | 1 | Backfill to Grade: Backfill | 0.0000 | 0.0000 | 13.0392 | 0.0000 | -31.2664 | 0.0000 |
| 10 | 1 | Backfill to Grade: Backfill | 0.0000 | 0.0000 | 13.0392 | 0.0000 | -31.2664 | 0.0000 |
| 10 | 1 | Backfill to Grade: Backfill | 0.0000 | 0.0000 | 13.0392 | 0.0000 | -31.2664 | 0.0000 |
| 10 | 1 | Backfill to Grade: Backfill | 0.0000 | 21.5810 | 13.0392 | -43.4976 | -31.2664 | -51.7486 |
| 10 | 1 | Backfill to Grade: Backfill | 0.0000 | 27.2899 | 13.0392 | -43.4976 | -31.2664 | -65.4380 |
| 10 | 1 | Pave: Pave: Creep | 0.0000 | 21.5810 | 13.0392 | -43.4976 | -31.2664 | -51.7486 |
| 10 | 1 | Pave: Pave: Shrinkage | 0.0000 | 21.5810 | 13.0392 | -43.4976 | -31.2664 | -51.7486 |
| 10 | 1 | Pave: Pave: PT | 0.0000 | 21.5810 | 13.0392 | -43.4976 | -31.2664 | -51.7486 |
| 10 | 1 | Pave: Pave: Other PT | 0.0000 | 21.5810 | 13.0392 | -43.4976 | -31.2664 | -51.7487 |
| 10 | 1 | Pave: Pave: step 1 | 0.0000 | 21.5810 | 13.0392 | -43.4976 | -31.2664 | -51.7487 |
| 10 | 1 | Open Bridge to Traffic: | 0.0000 | 21.5810 | 13.0392 | -43.4976 | -31.2664 | -51.7487 |
| 10 | 1 | Open Bridge to Traffic: | 0.0000 | 21.5810 | 13.0392 | -43.4976 | -31.2664 | -51.7487 |

## RESULT : Member Sectional Forces

| Member | Station | | Result Case | Force X (kips) | Force Y (kips) | Force Z (kips) | Moment X (kips-ft) | Moment Y (kips-ft) | Moment Z (kips-ft) |
|---|---|---|---|---|---|---|---|---|---|
| 10 | 1 | Open Bridge to Traffic: | 0.0000 | 21.5810 | 13.0392 | -43.4976 | -31.2664 | -51.7487 | |
| 10 | 1 | Open Bridge to Traffic: | 0.0000 | 21.5810 | 13.0392 | -43.4976 | -31.2664 | -51.7486 | |
| 10 | 1 | Open Bridge to Traffic: | 0.0000 | 28.7171 | 13.0392 | -43.4976 | -31.2664 | -68.8602 | |
| 10 | 1 | Open Bridge to Traffic: | 0.0000 | 27.2899 | 13.0392 | -43.4976 | -31.2664 | -65.4379 | |
| 10 | 1 | Partial Live Load for | 0.0000 | 21.5810 | 13.0392 | -43.4976 | -31.2664 | -51.7486 | |
| 10 | 1 | Partial Live Load for | 0.0000 | 21.5810 | 13.0392 | -43.4976 | -31.2664 | -51.7486 | |
| 10 | 1 | Partial Live Load for | 0.0000 | 21.5810 | 13.0392 | -43.4976 | -31.2664 | -51.7486 | |
| 10 | 1 | Partial Live Load for | 0.0000 | 21.5810 | 13.0392 | -43.4976 | -31.2664 | -51.7487 | |
| 10 | 1 | Partial Live Load for | 0.0000 | 22.2946 | 13.0392 | -43.4976 | -31.2664 | -53.4598 | |
| 10 | 1 | Remove Long Term Live | 0.0000 | 22.2946 | 13.0392 | -43.4976 | -31.2664 | -53.4598 | |
| 10 | 1 | Remove Long Term Live | 0.0000 | 22.2946 | 13.0392 | -43.4976 | -31.2664 | -53.4598 | |
| 10 | 1 | Remove Long Term Live | 0.0000 | 22.2946 | 13.0392 | -43.4976 | -31.2664 | -53.4598 | |
| 10 | 1 | Remove Long Term Live | 0.0000 | 22.2946 | 13.0392 | -43.4976 | -31.2664 | -53.4598 | |
| 10 | 1 | Remove Long Term Live | 0.0000 | 21.5810 | 13.0392 | -43.4976 | -31.2664 | -51.7487 | |
| 10 | 1 | Long Term Performance: | 0.0000 | 21.5810 | 13.0392 | -43.4976 | -31.2664 | -51.7487 | |
| 10 | 1 | Long Term Performance: | 0.0000 | 21.5810 | 13.0392 | -43.4976 | -31.2664 | -51.7487 | |
| 10 | 1 | Long Term Performance: | 0.0000 | 21.5810 | 13.0392 | -43.4976 | -31.2664 | -51.7487 | |
| 10 | 1 | Long Term Performance: | 0.0000 | 21.5810 | 13.0392 | -43.4976 | -31.2664 | -51.7486 | |
| 10 | 1 | Long Term Performance: | 0.0000 | 27.2899 | 13.0392 | -43.4976 | -31.2664 | -65.4379 | |
| 10 | 1 | Long Term Performance: | 0.0000 | 28.7171 | 13.0392 | -43.4976 | -31.2664 | -68.8602 | |
| 10 | 1 | Long Term Performance: | 0.0000 | 41.6225 | 16.2990 | -58.7218 | -39.0830 | -99.8059 | |
| 10 | 1 | Strength Check: Strength | 0.0000 | 21.5810 | 13.0392 | -43.4976 | -31.2664 | -51.7486 | |
| 10 | 1 | Strength Check: Strength | 0.0000 | 21.5810 | 13.0392 | -43.4976 | -31.2664 | -51.7486 | |
| 10 | 1 | Strength Check: Strength | 0.0000 | 21.5810 | 13.0392 | -43.4976 | -31.2664 | -51.7486 | |
| 10 | 1 | Strength Check: Strength | 0.0000 | 21.5810 | 13.0392 | -43.4976 | -31.2664 | -51.7487 | |
| 10 | 1 | Strength Check: Strength | 0.0000 | 21.5810 | 13.0392 | -43.4976 | -31.2664 | -51.7487 | |
| 10 | 1 | Strength Check: Strength | 0.0000 | 41.6225 | 16.2990 | -58.7218 | -39.0830 | -99.8060 | |
| 10 | 2 | Set Precast In Place: Set | 0.0000 | 0.0000 | 0.0000 | 0.0000 | 0.0000 | 0.0000 | |
| 10 | 2 | Set Precast In Place: Set | 0.0000 | 0.0000 | 0.0000 | 0.0000 | 0.0000 | 0.0000 | |
| 10 | 2 | Tension PT: Tension PT: | 0.0000 | 0.0000 | 0.0000 | 0.0000 | 0.0000 | 0.0000 | |
| 10 | 2 | Tension PT: Tension PT: | 0.0000 | 0.0000 | 0.0000 | 0.0000 | 0.0000 | 0.0000 | |
| 10 | 2 | Tension PT: Tension PT: | 0.0000 | 0.0000 | 0.0000 | 0.0000 | 0.0000 | 0.0000 | |
| 10 | 2 | Tension PT: Tension PT: | 0.0000 | 0.0000 | 0.0000 | 0.0000 | 0.0000 | 0.0000 | |
| 10 | 2 | Tension PT: Tension PT: | 0.0000 | 0.0000 | 0.0000 | 0.0000 | 0.0000 | 0.0000 | |

## RESULT : Member Sectional Forces

| Member | Station | | Result Case | Force X (kips) | | Force Y (kips) | | Force Z (kips) | Moment X (kips-ft) | Moment Y (kips-ft) | Moment Z (kips-ft) |
|---|---|---|---|---|---|---|---|---|---|---|---|
| 10 | 2 | Add Superstructure: Add | 0.0000 | 0.0000 | 0.0000 | 0.0000 | 0.0000 | 0.0000 | | | |
| 10 | 2 | Add Superstructure: Add | 0.0000 | 0.0000 | 0.0000 | 0.0000 | 0.0000 | 0.0000 | | | |
| 10 | 2 | Add Superstructure: Add | 0.0000 | 0.0000 | 0.0000 | 0.0000 | 0.0000 | 0.0000 | | | |
| 10 | 2 | Add Superstructure: Add | 0.0000 | 0.0000 | 0.0000 | 0.0000 | 0.0000 | 0.0000 | | | |
| 10 | 2 | Add Superstructure: Add | 0.0000 | 0.0000 | 0.0000 | 0.0000 | 0.0000 | 0.0000 | | | |
| 10 | 2 | Backfill to Grade: Backfill | 0.0000 | 0.0000 | 0.0000 | 0.0000 | 0.0000 | 0.0000 | | | |
| 10 | 2 | Backfill to Grade: Backfill | 0.0000 | 0.0000 | 0.0000 | 0.0000 | 0.0000 | 0.0000 | | | |
| 10 | 2 | Backfill to Grade: Backfill | 0.0000 | 0.0000 | 0.0000 | 0.0000 | 0.0000 | 0.0000 | | | |
| 10 | 2 | Backfill to Grade: Backfill | 0.0000 | 0.0000 | 0.0000 | 0.0000 | 0.0000 | 0.0000 | | | |
| 10 | 2 | Backfill to Grade: Backfill | 0.0000 | 0.0000 | 0.0000 | 0.0000 | 0.0000 | 0.0000 | | | |
| 10 | 2 | Backfill to Grade: Backfill | 0.0000 | 0.0000 | 0.0000 | 0.0000 | 0.0000 | 0.0000 | | | |
| 10 | 2 | Pave: Pave: Creep | 0.0000 | 0.0000 | 0.0000 | 0.0000 | 0.0000 | 0.0000 | | | |
| 10 | 2 | Pave: Pave: Shrinkage | 0.0000 | 0.0000 | 0.0000 | 0.0000 | 0.0000 | 0.0000 | | | |
| 10 | 2 | Pave: Pave: PT | 0.0000 | 0.0000 | 0.0000 | 0.0000 | 0.0000 | 0.0000 | | | |
| 10 | 2 | Pave: Pave: Other PT | 0.0000 | 0.0000 | 0.0000 | 0.0000 | 0.0000 | 0.0000 | | | |
| 10 | 2 | Pave: Pave: step 1 | 0.0000 | 0.0000 | 0.0000 | 0.0000 | 0.0000 | 0.0000 | | | |
| 10 | 2 | Open Bridge to Traffic: | 0.0000 | 0.0000 | 0.0000 | 0.0000 | 0.0000 | 0.0000 | | | |
| 10 | 2 | Open Bridge to Traffic: | 0.0000 | 0.0000 | 0.0000 | 0.0000 | 0.0000 | 0.0000 | | | |
| 10 | 2 | Open Bridge to Traffic: | 0.0000 | 0.0000 | 0.0000 | 0.0000 | 0.0000 | 0.0000 | | | |
| 10 | 2 | Open Bridge to Traffic: | 0.0000 | 0.0000 | 0.0000 | 0.0000 | 0.0000 | 0.0000 | | | |
| 10 | 2 | Open Bridge to Traffic: | 0.0000 | 0.0000 | 0.0000 | 0.0000 | 0.0000 | 0.0000 | | | |
| 10 | 2 | Open Bridge to Traffic: | 0.0000 | 0.0000 | 0.0000 | 0.0000 | 0.0000 | 0.0000 | | | |
| 10 | 2 | Partial Live Load for | 0.0000 | 0.0000 | 0.0000 | 0.0000 | 0.0000 | 0.0000 | | | |
| 10 | 2 | Partial Live Load for | 0.0000 | 0.0000 | 0.0000 | 0.0000 | 0.0000 | 0.0000 | | | |
| 10 | 2 | Partial Live Load for | 0.0000 | 0.0000 | 0.0000 | 0.0000 | 0.0000 | 0.0000 | | | |
| 10 | 2 | Partial Live Load for | 0.0000 | 0.0000 | 0.0000 | 0.0000 | 0.0000 | 0.0000 | | | |
| 10 | 2 | Partial Live Load for | 0.0000 | 0.0000 | 0.0000 | 0.0000 | 0.0000 | 0.0000 | | | |
| 10 | 2 | Remove Long Term Live | 0.0000 | 0.0000 | 0.0000 | 0.0000 | 0.0000 | 0.0000 | | | |
| 10 | 2 | Remove Long Term Live | 0.0000 | 0.0000 | 0.0000 | 0.0000 | 0.0000 | 0.0000 | | | |
| 10 | 2 | Remove Long Term Live | 0.0000 | 0.0000 | 0.0000 | 0.0000 | 0.0000 | 0.0000 | | | |
| 10 | 2 | Remove Long Term Live | 0.0000 | 0.0000 | 0.0000 | 0.0000 | 0.0000 | 0.0000 | | | |
| 10 | 2 | Remove Long Term Live | 0.0000 | 0.0000 | 0.0000 | 0.0000 | 0.0000 | 0.0000 | | | |
| 10 | 2 | Long Term Performance: | 0.0000 | 0.0000 | 0.0000 | 0.0000 | 0.0000 | 0.0000 | | | |
| 10 | 2 | Long Term Performance: | 0.0000 | 0.0000 | 0.0000 | 0.0000 | 0.0000 | 0.0000 | | | |

## RESULT : Member Sectional Forces

| Member | Station | Result Case | Force X (kips) | Force Y (kips) | Force Z (kips) | Moment X (kips-ft) | Moment Y (kips-ft) | Moment Z (kips-ft) |
|---|---|---|---|---|---|---|---|---|
| 10 | 2 | Long Term Performance: | 0.0000 | 0.0000 | 0.0000 | 0.0000 | 0.0000 | 0.0000 |
| 10 | 2 | Long Term Performance: | 0.0000 | 0.0000 | 0.0000 | 0.0000 | 0.0000 | 0.0000 |
| 10 | 2 | Long Term Performance: | 0.0000 | 0.0000 | 0.0000 | 0.0000 | 0.0000 | 0.0000 |
| 10 | 2 | Long Term Performance: | 0.0000 | 0.0000 | 0.0000 | 0.0000 | 0.0000 | 0.0000 |
| 10 | 2 | Long Term Performance: | 0.0000 | 0.0000 | 0.0000 | 0.0000 | 0.0000 | 0.0000 |
| 10 | 2 | Strength Check: Strength | 0.0000 | 0.0000 | 0.0000 | 0.0000 | 0.0000 | 0.0000 |
| 10 | 2 | Strength Check: Strength | 0.0000 | 0.0000 | 0.0000 | 0.0000 | 0.0000 | 0.0000 |
| 10 | 2 | Strength Check: Strength | 0.0000 | 0.0000 | 0.0000 | 0.0000 | 0.0000 | 0.0000 |
| 10 | 2 | Strength Check: Strength | 0.0000 | 0.0000 | 0.0000 | 0.0000 | 0.0000 | 0.0000 |
| 10 | 2 | Strength Check: Strength | 0.0000 | 0.0000 | 0.0000 | 0.0000 | 0.0000 | 0.0000 |
| 10 | 2 | Strength Check: Strength | 0.0000 | 0.0000 | 0.0000 | 0.0000 | 0.0000 | 0.0000 |

## RESULT : Member Stresses

| Member | Station | Result Case | (P/A) @ Centroid (kips/in²) | Normal Stress @ Point 1 (kips/in²) | Normal Stress @ Point 2 (kips/in²) | Normal Stress @ Point 3 (kips/in²) | Normal Stress @ Point 4 (kips/in²) | Normal Stress @ Point 5 | Normal Stress @ Point 6 | Max ABS Total Stress (kips/in²) |
|---|---|---|---|---|---|---|---|---|---|---|
| 1 | 0 | Set Precast In | 0.0000 | 0.0000 | 0.0000 | 0.0000 | 0.0000 | 0.0000 | 0.0000 | 0.0000 |
| 1 | 0 | Set Precast In | 0.0000 | 0.0000 | 0.0000 | 0.0000 | 0.0000 | 0.0000 | 0.0000 | 0.0000 |
| 1 | 0 | Tension PT: | 0.0000 | 0.0000 | 0.0000 | 0.0000 | 0.0000 | 0.0000 | 0.0000 | 0.0000 |
| 1 | 0 | Tension PT: | 0.0000 | 0.0000 | 0.0000 | 0.0000 | 0.0000 | 0.0000 | 0.0000 | 0.0000 |
| 1 | 0 | Tension PT: | 0.0000 | 0.0000 | 0.0000 | 0.0000 | 0.0000 | 0.0000 | 0.0000 | 0.0000 |
| 1 | 0 | Tension PT: | 0.0000 | 0.0000 | 0.0000 | 0.0000 | 0.0000 | 0.0000 | 0.0000 | 0.0000 |
| 1 | 0 | Tension PT: | 0.0000 | 0.0000 | 0.0000 | 0.0000 | 0.0000 | 0.0000 | 0.0000 | 0.0000 |
| 1 | 0 | Add | 0.0000 | 0.0000 | 0.0000 | 0.0000 | 0.0000 | 0.0000 | 0.0000 | 0.0000 |
| 1 | 0 | Add | 0.0000 | 0.0000 | 0.0000 | 0.0000 | 0.0000 | 0.0000 | 0.0000 | 0.0000 |
| 1 | 0 | Add | 0.0000 | 0.0000 | 0.0000 | 0.0000 | 0.0000 | 0.0000 | 0.0000 | 0.0000 |
| 1 | 0 | Add | 0.0000 | 0.0000 | 0.0000 | 0.0000 | 0.0000 | 0.0000 | 0.0000 | 0.0000 |
| 1 | 0 | Add | 0.0000 | 0.0000 | 0.0000 | 0.0000 | 0.0000 | 0.0000 | 0.0000 | 0.0000 |
| 1 | 0 | Backfill to Grade: | 0.0000 | 0.0000 | 0.0000 | 0.0000 | 0.0000 | 0.0000 | 0.0000 | 0.0000 |
| 1 | 0 | Backfill to Grade: | 0.0000 | 0.0000 | 0.0000 | 0.0000 | 0.0000 | 0.0000 | 0.0000 | 0.0000 |
| 1 | 0 | Backfill to Grade: | 0.0000 | 0.0000 | 0.0000 | 0.0000 | 0.0000 | 0.0000 | 0.0000 | 0.0000 |
| 1 | 0 | Backfill to Grade: | 0.0000 | 0.0000 | 0.0000 | 0.0000 | 0.0000 | 0.0000 | 0.0000 | 0.0000 |
| 1 | 0 | Backfill to Grade: | 0.0000 | 0.0000 | 0.0000 | 0.0000 | 0.0000 | 0.0000 | 0.0000 | 0.0000 |
| 1 | 0 | Backfill to Grade: | 0.0000 | 0.0000 | 0.0000 | 0.0000 | 0.0000 | 0.0000 | 0.0000 | 0.0000 |
| 1 | 0 | Pave: Pave: | 0.0000 | 0.0000 | 0.0000 | 0.0000 | 0.0000 | 0.0000 | 0.0000 | 0.0000 |

## RESULT : Member Stresses

| Member | Station | Result Case | (P/A) @ Centroid (kips/in²) | Normal Stress @ Point 1 (kips/in²) | Normal Stress @ Point 2 (kips/in²) | Normal Stress @ Point 3 (kips/in²) | Normal Stress @ Point 4 (kips/in²) | Normal Stress @ Point 5 | Normal Stress @ Point 6 | Max ABS Total Stress (kips/in²) |
|---|---|---|---|---|---|---|---|---|---|---|
| 1 | 0 | Pave: Pave: | 0.0000 | 0.0000 | 0.0000 | 0.0000 | 0.0000 | 0.0000 | 0.0000 | 0.0000 |
| 1 | 0 | Pave: Pave: PT | 0.0000 | 0.0000 | 0.0000 | 0.0000 | 0.0000 | 0.0000 | 0.0000 | 0.0000 |
| 1 | 0 | Pave: Pave: | 0.0000 | 0.0000 | 0.0000 | 0.0000 | 0.0000 | 0.0000 | 0.0000 | 0.0000 |
| 1 | 0 | Pave: Pave: step | 0.0000 | 0.0000 | 0.0000 | 0.0000 | 0.0000 | 0.0000 | 0.0000 | 0.0000 |
| 1 | 0 | Open Bridge to | 0.0000 | 0.0000 | 0.0000 | 0.0000 | 0.0000 | 0.0000 | 0.0000 | 0.0000 |
| 1 | 0 | Open Bridge to | 0.0000 | 0.0000 | 0.0000 | 0.0000 | 0.0000 | 0.0000 | 0.0000 | 0.0000 |
| 1 | 0 | Open Bridge to | 0.0000 | 0.0000 | 0.0000 | 0.0000 | 0.0000 | 0.0000 | 0.0000 | 0.0000 |
| 1 | 0 | Open Bridge to | 0.0000 | 0.0000 | 0.0000 | 0.0000 | 0.0000 | 0.0000 | 0.0000 | 0.0000 |
| 1 | 0 | Open Bridge to | 0.0000 | 0.0000 | 0.0000 | 0.0000 | 0.0000 | 0.0000 | 0.0000 | 0.0000 |
| 1 | 0 | Open Bridge to | 0.0000 | 0.0000 | 0.0000 | 0.0000 | 0.0000 | 0.0000 | 0.0000 | 0.0000 |
| 1 | 0 | Partial Live Load | 0.0000 | 0.0000 | 0.0000 | 0.0000 | 0.0000 | 0.0000 | 0.0000 | 0.0000 |
| 1 | 0 | Partial Live Load | 0.0000 | 0.0000 | 0.0000 | 0.0000 | 0.0000 | 0.0000 | 0.0000 | 0.0000 |
| 1 | 0 | Partial Live Load | 0.0000 | 0.0000 | 0.0000 | 0.0000 | 0.0000 | 0.0000 | 0.0000 | 0.0000 |
| 1 | 0 | Partial Live Load | 0.0000 | 0.0000 | 0.0000 | 0.0000 | 0.0000 | 0.0000 | 0.0000 | 0.0000 |
| 1 | 0 | Partial Live Load | 0.0000 | 0.0000 | 0.0000 | 0.0000 | 0.0000 | 0.0000 | 0.0000 | 0.0000 |
| 1 | 0 | Remove Long | 0.0000 | 0.0000 | 0.0000 | 0.0000 | 0.0000 | 0.0000 | 0.0000 | 0.0000 |
| 1 | 0 | Remove Long | 0.0000 | 0.0000 | 0.0000 | 0.0000 | 0.0000 | 0.0000 | 0.0000 | 0.0000 |
| 1 | 0 | Remove Long | 0.0000 | 0.0000 | 0.0000 | 0.0000 | 0.0000 | 0.0000 | 0.0000 | 0.0000 |
| 1 | 0 | Remove Long | 0.0000 | 0.0000 | 0.0000 | 0.0000 | 0.0000 | 0.0000 | 0.0000 | 0.0000 |
| 1 | 0 | Remove Long | 0.0000 | 0.0000 | 0.0000 | 0.0000 | 0.0000 | 0.0000 | 0.0000 | 0.0000 |
| 1 | 0 | Long Term | 0.0000 | 0.0000 | 0.0000 | 0.0000 | 0.0000 | 0.0000 | 0.0000 | 0.0000 |
| 1 | 0 | Long Term | 0.0000 | 0.0000 | 0.0000 | 0.0000 | 0.0000 | 0.0000 | 0.0000 | 0.0000 |
| 1 | 0 | Long Term | 0.0000 | 0.0000 | 0.0000 | 0.0000 | 0.0000 | 0.0000 | 0.0000 | 0.0000 |
| 1 | 0 | Long Term | 0.0000 | 0.0000 | 0.0000 | 0.0000 | 0.0000 | 0.0000 | 0.0000 | 0.0000 |
| 1 | 0 | Long Term | 0.0000 | 0.0000 | 0.0000 | 0.0000 | 0.0000 | 0.0000 | 0.0000 | 0.0000 |
| 1 | 0 | Long Term | 0.0000 | 0.0000 | 0.0000 | 0.0000 | 0.0000 | 0.0000 | 0.0000 | 0.0000 |
| 1 | 0 | Long Term | 0.0000 | 0.0000 | 0.0000 | 0.0000 | 0.0000 | 0.0000 | 0.0000 | 0.0000 |
| 1 | 0 | Strength Check: | 0.0000 | 0.0000 | 0.0000 | 0.0000 | 0.0000 | 0.0000 | 0.0000 | 0.0000 |
| 1 | 0 | Strength Check: | 0.0000 | 0.0000 | 0.0000 | 0.0000 | 0.0000 | 0.0000 | 0.0000 | 0.0000 |
| 1 | 0 | Strength Check: | 0.0000 | 0.0000 | 0.0000 | 0.0000 | 0.0000 | 0.0000 | 0.0000 | 0.0000 |
| 1 | 0 | Strength Check: | 0.0000 | 0.0000 | 0.0000 | 0.0000 | 0.0000 | 0.0000 | 0.0000 | 0.0000 |
| 1 | 0 | Strength Check: | 0.0000 | 0.0000 | 0.0000 | 0.0000 | 0.0000 | 0.0000 | 0.0000 | 0.0000 |
| 1 | 0 | Strength Check: | 0.0000 | 0.0000 | 0.0000 | 0.0000 | 0.0000 | 0.0000 | 0.0000 | 0.0000 |
| 1 | 1 | Set Precast In | 0.0000 | 0.0000 | 0.0000 | 0.0000 | 0.0000 | 0.0000 | 0.0000 | 0.0000 |

## RESULT : Member Stresses

| Member | Station | Result Case | (P/A) @ Centroid (kips/in²) | Normal Stress @ Point 1 (kips/in²) | Normal Stress @ Point 2 (kips/in²) | Normal Stress @ Point 3 (kips/in²) | Normal Stress @ Point 4 (kips/in²) | Normal Stress @ Point 5 | Normal Stress @ Point 6 | Max ABS Total Stress (kips/in²) |
|---|---|---|---|---|---|---|---|---|---|---|
| 1 | 1 | Set Precast In | 0.0000 | 0.0055 | -0.0055 | -0.0055 | 0.0055 | 0.0000 | 0.0000 | 0.0055 |
| 1 | 1 | Tension PT: | 0.0000 | 0.0055 | -0.0055 | -0.0055 | 0.0055 | 0.0000 | 0.0000 | -0.0055 |
| 1 | 1 | Tension PT: | 0.0000 | 0.0055 | -0.0055 | -0.0055 | 0.0055 | 0.0000 | 0.0000 | 0.0055 |
| 1 | 1 | Tension PT: | 0.0000 | 0.0055 | -0.0055 | -0.0055 | 0.0055 | 0.0000 | 0.0000 | -0.0055 |
| 1 | 1 | Tension PT: | 0.0000 | 0.0055 | -0.0055 | -0.0055 | 0.0055 | 0.0000 | 0.0000 | 0.0055 |
| 1 | 1 | Tension PT: | 0.0000 | 0.0055 | -0.0055 | -0.0055 | 0.0055 | 0.0000 | 0.0000 | 0.0055 |
| 1 | 1 | Add | 0.0000 | 0.0055 | -0.0055 | -0.0055 | 0.0055 | 0.0000 | 0.0000 | 0.0055 |
| 1 | 1 | Add | 0.0000 | 0.0055 | -0.0055 | -0.0055 | 0.0055 | 0.0000 | 0.0000 | -0.0055 |
| 1 | 1 | Add | 0.0000 | 0.0055 | -0.0055 | -0.0055 | 0.0055 | 0.0000 | 0.0000 | 0.0055 |
| 1 | 1 | Add | 0.0000 | 0.0055 | -0.0055 | -0.0055 | 0.0055 | 0.0000 | 0.0000 | 0.0055 |
| 1 | 1 | Add | 0.0000 | 0.0055 | -0.0055 | -0.0055 | 0.0055 | 0.0000 | 0.0000 | 0.0055 |
| 1 | 1 | Backfill to Grade: | 0.0000 | 0.0055 | -0.0055 | -0.0055 | 0.0055 | 0.0000 | 0.0000 | 0.0055 |
| 1 | 1 | Backfill to Grade: | 0.0000 | 0.0055 | -0.0055 | -0.0055 | 0.0055 | 0.0000 | 0.0000 | -0.0055 |
| 1 | 1 | Backfill to Grade: | 0.0000 | 0.0055 | -0.0055 | -0.0055 | 0.0055 | 0.0000 | 0.0000 | 0.0055 |
| 1 | 1 | Backfill to Grade: | 0.0000 | 0.0055 | -0.0055 | -0.0055 | 0.0055 | 0.0000 | 0.0000 | 0.0055 |
| 1 | 1 | Backfill to Grade: | 0.0000 | 0.0744 | 0.0633 | -0.0744 | -0.0633 | 0.0000 | 0.0000 | 0.0744 |
| 1 | 1 | Backfill to Grade: | 0.0000 | 0.0933 | 0.0822 | -0.0933 | -0.0822 | 0.0000 | 0.0000 | 0.0933 |
| 1 | 1 | Pave: Pave: | 0.0000 | 0.0744 | 0.0633 | -0.0744 | -0.0633 | 0.0000 | 0.0000 | -0.0744 |
| 1 | 1 | Pave: Pave: | 0.0000 | 0.0744 | 0.0633 | -0.0744 | -0.0633 | 0.0000 | 0.0000 | 0.0744 |
| 1 | 1 | Pave: Pave: PT | 0.0000 | 0.0744 | 0.0633 | -0.0744 | -0.0633 | 0.0000 | 0.0000 | 0.0744 |
| 1 | 1 | Pave: Pave: | 0.0000 | 0.0744 | 0.0633 | -0.0744 | -0.0633 | 0.0000 | 0.0000 | -0.0744 |
| 1 | 1 | Pave: Pave: step | 0.0000 | 0.0744 | 0.0633 | -0.0744 | -0.0633 | 0.0000 | 0.0000 | -0.0744 |
| 1 | 1 | Open Bridge to | 0.0000 | 0.0744 | 0.0633 | -0.0744 | -0.0633 | 0.0000 | 0.0000 | 0.0744 |
| 1 | 1 | Open Bridge to | 0.0000 | 0.0744 | 0.0633 | -0.0744 | -0.0633 | 0.0000 | 0.0000 | -0.0744 |
| 1 | 1 | Open Bridge to | 0.0000 | 0.0744 | 0.0633 | -0.0744 | -0.0633 | 0.0000 | 0.0000 | 0.0744 |
| 1 | 1 | Open Bridge to | 0.0000 | 0.0744 | 0.0633 | -0.0744 | -0.0633 | 0.0000 | 0.0000 | 0.0744 |
| 1 | 1 | Open Bridge to | 0.0000 | 0.0980 | 0.0869 | -0.0980 | -0.0869 | 0.0000 | 0.0000 | 0.0980 |
| 1 | 1 | Open Bridge to | 0.0000 | 0.0933 | 0.0822 | -0.0933 | -0.0822 | 0.0000 | 0.0000 | 0.0933 |
| 1 | 1 | Partial Live Load | 0.0000 | 0.0744 | 0.0633 | -0.0744 | -0.0633 | 0.0000 | 0.0000 | -0.0744 |
| 1 | 1 | Partial Live Load | 0.0000 | 0.0744 | 0.0633 | -0.0744 | -0.0633 | 0.0000 | 0.0000 | -0.0744 |
| 1 | 1 | Partial Live Load | 0.0000 | 0.0744 | 0.0633 | -0.0744 | -0.0633 | 0.0000 | 0.0000 | -0.0744 |
| 1 | 1 | Partial Live Load | 0.0000 | 0.0744 | 0.0633 | -0.0744 | -0.0633 | 0.0000 | 0.0000 | 0.0744 |
| 1 | 1 | Partial Live Load | 0.0000 | 0.0768 | 0.0657 | -0.0768 | -0.0657 | 0.0000 | 0.0000 | -0.0768 |
| 1 | 1 | Remove Long | 0.0000 | 0.0768 | 0.0657 | -0.0768 | -0.0657 | 0.0000 | 0.0000 | -0.0768 |

## RESULT : Member Stresses

| Member | Station | Result Case | (P/A) @ Centroid (kips/in²) | Normal Stress @ Point 1 (kips/in²) | Normal Stress @ Point 2 (kips/in²) | Normal Stress @ Point 3 (kips/in²) | Normal Stress @ Point 4 (kips/in²) | Normal Stress @ Point 5 | Normal Stress @ Point 6 | Max ABS Total Stress (kips/in²) |
|---|---|---|---|---|---|---|---|---|---|---|
| 1 | 1 | Remove Long | 0.0000 | 0.0768 | 0.0657 | -0.0768 | -0.0657 | 0.0000 | 0.0000 | -0.0768 |
| 1 | 1 | Remove Long | 0.0000 | 0.0768 | 0.0657 | -0.0768 | -0.0657 | 0.0000 | 0.0000 | 0.0768 |
| 1 | 1 | Remove Long | 0.0000 | 0.0768 | 0.0657 | -0.0768 | -0.0657 | 0.0000 | 0.0000 | 0.0768 |
| 1 | 1 | Remove Long | 0.0000 | 0.0744 | 0.0633 | -0.0744 | -0.0633 | 0.0000 | 0.0000 | 0.0744 |
| 1 | 1 | Long Term | 0.0000 | 0.0744 | 0.0633 | -0.0744 | -0.0633 | 0.0000 | 0.0000 | -0.0744 |
| 1 | 1 | Long Term | 0.0000 | 0.0744 | 0.0633 | -0.0744 | -0.0633 | 0.0000 | 0.0000 | 0.0744 |
| 1 | 1 | Long Term | 0.0000 | 0.0744 | 0.0633 | -0.0744 | -0.0633 | 0.0000 | 0.0000 | 0.0744 |
| 1 | 1 | Long Term | 0.0000 | 0.0744 | 0.0633 | -0.0744 | -0.0633 | 0.0000 | 0.0000 | -0.0744 |
| 1 | 1 | Long Term | 0.0000 | 0.0933 | 0.0822 | -0.0933 | -0.0822 | 0.0000 | 0.0000 | 0.0933 |
| 1 | 1 | Long Term | 0.0000 | 0.0980 | 0.0869 | -0.0980 | -0.0869 | 0.0000 | 0.0000 | 0.0980 |
| 1 | 1 | Long Term | 0.0000 | 0.1412 | 0.1274 | -0.1412 | -0.1274 | 0.0000 | 0.0000 | 0.1412 |
| 1 | 1 | Strength Check: | 0.0000 | 0.0744 | 0.0633 | -0.0744 | -0.0633 | 0.0000 | 0.0000 | -0.0744 |
| 1 | 1 | Strength Check: | 0.0000 | 0.0744 | 0.0633 | -0.0744 | -0.0633 | 0.0000 | 0.0000 | 0.0744 |
| 1 | 1 | Strength Check: | 0.0000 | 0.0744 | 0.0633 | -0.0744 | -0.0633 | 0.0000 | 0.0000 | -0.0744 |
| 1 | 1 | Strength Check: | 0.0000 | 0.0744 | 0.0633 | -0.0744 | -0.0633 | 0.0000 | 0.0000 | 0.0744 |
| 1 | 1 | Strength Check: | 0.0000 | 0.0744 | 0.0633 | -0.0744 | -0.0633 | 0.0000 | 0.0000 | 0.0744 |
| 1 | 1 | Strength Check: | 0.0000 | 0.1412 | 0.1274 | -0.1412 | -0.1274 | 0.0000 | 0.0000 | -0.1412 |
| 1 | 2 | Set Precast In | 0.0000 | 0.0000 | 0.0000 | 0.0000 | 0.0000 | 0.0000 | 0.0000 | 0.0000 |
| 1 | 2 | Set Precast In | 0.0000 | 0.0221 | -0.0221 | -0.0221 | 0.0221 | 0.0000 | 0.0000 | 0.0221 |
| 1 | 2 | Tension PT: | 0.0000 | 0.0221 | -0.0221 | -0.0221 | 0.0221 | 0.0000 | 0.0000 | -0.0221 |
| 1 | 2 | Tension PT: | 0.0000 | 0.0221 | -0.0221 | -0.0221 | 0.0221 | 0.0000 | 0.0000 | -0.0221 |
| 1 | 2 | Tension PT: | 0.0000 | 0.0221 | -0.0221 | -0.0221 | 0.0221 | 0.0000 | 0.0000 | -0.0221 |
| 1 | 2 | Tension PT: | 0.0000 | 0.0221 | -0.0221 | -0.0221 | 0.0221 | 0.0000 | 0.0000 | -0.0221 |
| 1 | 2 | Tension PT: | 0.0413 | -0.2766 | -0.2466 | 0.3591 | 0.3291 | 0.0000 | 0.0000 | 0.3591 |
| 1 | 2 | Add | 0.0413 | -0.2766 | -0.2466 | 0.3591 | 0.3291 | 0.0000 | 0.0000 | 0.3591 |
| 1 | 2 | Add | 0.0413 | -0.2766 | -0.2466 | 0.3591 | 0.3291 | 0.0000 | 0.0000 | 0.3591 |
| 1 | 2 | Add | 0.0413 | -0.2766 | -0.2466 | 0.3591 | 0.3291 | 0.0000 | 0.0000 | 0.3591 |
| 1 | 2 | Add | 0.0412 | -0.2765 | -0.2466 | 0.3590 | 0.3290 | 0.0000 | 0.0000 | 0.3590 |
| 1 | 2 | Add | 0.0412 | -0.2765 | -0.2466 | 0.3590 | 0.3290 | 0.0000 | 0.0000 | 0.3590 |
| 1 | 2 | Backfill to Grade: | 0.0412 | -0.2765 | -0.2466 | 0.3590 | 0.3290 | 0.0000 | 0.0000 | 0.3590 |
| 1 | 2 | Backfill to Grade: | 0.0412 | -0.2765 | -0.2466 | 0.3590 | 0.3290 | 0.0000 | 0.0000 | 0.3590 |
| 1 | 2 | Backfill to Grade: | 0.0412 | -0.2765 | -0.2466 | 0.3590 | 0.3290 | 0.0000 | 0.0000 | 0.3590 |
| 1 | 2 | Backfill to Grade: | 0.0412 | -0.2764 | -0.2465 | 0.3588 | 0.3289 | 0.0000 | 0.0000 | 0.3588 |
| 1 | 2 | Backfill to Grade: | 0.0412 | -0.0119 | 0.0180 | 0.0944 | 0.0645 | 0.0000 | 0.0000 | 0.0944 |

## RESULT : Member Stresses

| Member | Station | Result Case | (P/A) @ Centroid (kips/in²) | Normal Stress @ Point 1 (kips/in²) | Normal Stress @ Point 2 (kips/in²) | Normal Stress @ Point 3 (kips/in²) | Normal Stress @ Point 4 (kips/in²) | Normal Stress @ Point 5 | Normal Stress @ Point 6 | Max ABS Total Stress (kips/in²) |
|---|---|---|---|---|---|---|---|---|---|---|
| 1 | 2 | Backfill to Grade: | 0.0412 | 0.0606 | 0.0905 | 0.0219 | -0.0081 | 0.0000 | 0.0000 | 0.0905 |
| 1 | 2 | Pave: Pave: | 0.0412 | -0.0119 | 0.0180 | 0.0944 | 0.0645 | 0.0000 | 0.0000 | 0.0944 |
| 1 | 2 | Pave: Pave: | 0.0412 | -0.0119 | 0.0180 | 0.0944 | 0.0645 | 0.0000 | 0.0000 | 0.0944 |
| 1 | 2 | Pave: Pave: PT | 0.0412 | -0.0119 | 0.0180 | 0.0944 | 0.0645 | 0.0000 | 0.0000 | 0.0944 |
| 1 | 2 | Pave: Pave: | 0.0412 | -0.0120 | 0.0180 | 0.0944 | 0.0645 | 0.0000 | 0.0000 | 0.0944 |
| 1 | 2 | Pave: Pave: step | 0.0412 | -0.0120 | 0.0180 | 0.0944 | 0.0645 | 0.0000 | 0.0000 | 0.0944 |
| 1 | 2 | Open Bridge to | 0.0412 | -0.0120 | 0.0180 | 0.0944 | 0.0645 | 0.0000 | 0.0000 | 0.0944 |
| 1 | 2 | Open Bridge to | 0.0412 | -0.0120 | 0.0180 | 0.0944 | 0.0645 | 0.0000 | 0.0000 | 0.0944 |
| 1 | 2 | Open Bridge to | 0.0412 | -0.0120 | 0.0180 | 0.0944 | 0.0645 | 0.0000 | 0.0000 | 0.0944 |
| 1 | 2 | Open Bridge to | 0.0412 | -0.0120 | 0.0180 | 0.0944 | 0.0645 | 0.0000 | 0.0000 | 0.0944 |
| 1 | 2 | Open Bridge to | 0.0412 | 0.0787 | 0.1086 | 0.0037 | -0.0262 | 0.0000 | 0.0000 | 0.1086 |
| 1 | 2 | Open Bridge to | 0.0412 | 0.0606 | 0.0905 | 0.0219 | -0.0081 | 0.0000 | 0.0000 | 0.0905 |
| 1 | 2 | Partial Live Load | 0.0412 | -0.0120 | 0.0180 | 0.0944 | 0.0645 | 0.0000 | 0.0000 | 0.0944 |
| 1 | 2 | Partial Live Load | 0.0412 | -0.0120 | 0.0180 | 0.0944 | 0.0645 | 0.0000 | 0.0000 | 0.0944 |
| 1 | 2 | Partial Live Load | 0.0412 | -0.0120 | 0.0180 | 0.0944 | 0.0645 | 0.0000 | 0.0000 | 0.0944 |
| 1 | 2 | Partial Live Load | 0.0412 | -0.0119 | 0.0180 | 0.0944 | 0.0645 | 0.0000 | 0.0000 | 0.0944 |
| 1 | 2 | Partial Live Load | 0.0412 | -0.0029 | 0.0271 | 0.0853 | 0.0554 | 0.0000 | 0.0000 | 0.0853 |
| 1 | 2 | Remove Long | 0.0412 | -0.0029 | 0.0271 | 0.0853 | 0.0554 | 0.0000 | 0.0000 | 0.0853 |
| 1 | 2 | Remove Long | 0.0412 | -0.0029 | 0.0271 | 0.0853 | 0.0554 | 0.0000 | 0.0000 | 0.0853 |
| 1 | 2 | Remove Long | 0.0412 | -0.0029 | 0.0271 | 0.0853 | 0.0554 | 0.0000 | 0.0000 | 0.0853 |
| 1 | 2 | Remove Long | 0.0395 | 0.0099 | 0.0366 | 0.0690 | 0.0423 | 0.0000 | 0.0000 | 0.0690 |
| 1 | 2 | Remove Long | 0.0395 | 0.0008 | 0.0276 | 0.0781 | 0.0513 | 0.0000 | 0.0000 | 0.0781 |
| 1 | 2 | Long Term | 0.0395 | 0.0008 | 0.0276 | 0.0781 | 0.0513 | 0.0000 | 0.0000 | 0.0781 |
| 1 | 2 | Long Term | 0.0395 | 0.0008 | 0.0276 | 0.0781 | 0.0513 | 0.0000 | 0.0000 | 0.0781 |
| 1 | 2 | Long Term | 0.0395 | 0.0008 | 0.0276 | 0.0781 | 0.0513 | 0.0000 | 0.0000 | 0.0781 |
| 1 | 2 | Long Term | 0.0394 | 0.0013 | 0.0279 | 0.0774 | 0.0508 | 0.0000 | 0.0000 | 0.0774 |
| 1 | 2 | Long Term | 0.0394 | 0.0739 | 0.1005 | 0.0049 | -0.0217 | 0.0000 | 0.0000 | 0.1005 |
| 1 | 2 | Long Term | 0.0394 | 0.0920 | 0.1186 | -0.0132 | -0.0399 | 0.0000 | 0.0000 | 0.1186 |
| 1 | 2 | Long Term | 0.0394 | 0.2581 | 0.2736 | -0.1793 | -0.1949 | 0.0000 | 0.0000 | 0.2736 |
| 1 | 2 | Strength Check: | 0.0394 | 0.0013 | 0.0279 | 0.0774 | 0.0508 | 0.0000 | 0.0000 | 0.0774 |
| 1 | 2 | Strength Check: | 0.0394 | 0.0013 | 0.0279 | 0.0774 | 0.0508 | 0.0000 | 0.0000 | 0.0774 |
| 1 | 2 | Strength Check: | 0.0394 | 0.0013 | 0.0279 | 0.0774 | 0.0508 | 0.0000 | 0.0000 | 0.0774 |
| 1 | 2 | Strength Check: | 0.0394 | 0.0013 | 0.0279 | 0.0774 | 0.0508 | 0.0000 | 0.0000 | 0.0774 |
| 1 | 2 | Strength Check: | 0.0000 | 0.2866 | 0.2423 | -0.2866 | -0.2423 | 0.0000 | 0.0000 | 0.2866 |

## RESULT : Member Stresses

| Member | Station | Result Case | (P/A) @ Centroid (kips/in²) | Normal Stress @ Point 1 (kips/in²) | Normal Stress @ Point 2 (kips/in²) | Normal Stress @ Point 3 (kips/in²) | Normal Stress @ Point 4 (kips/in²) | Normal Stress @ Point 5 | Normal Stress @ Point 6 | Max ABS Total Stress (kips/in²) |
|---|---|---|---|---|---|---|---|---|---|---|
| 1 | 2 | Strength Check: | 0.0394 | 0.2581 | 0.2736 | -0.1793 | -0.1949 | 0.0000 | 0.0000 | 0.2736 |
| 2 | 0 | Set Precast In | 0.0000 | 0.0000 | 0.0000 | 0.0000 | 0.0000 | 0.0000 | 0.0000 | 0.0000 |
| 2 | 0 | Set Precast In | 0.0000 | -0.0064 | 0.0071 | 0.0065 | -0.0070 | 0.0000 | 0.0000 | 0.0071 |
| 2 | 0 | Tension PT: | 0.0000 | -0.0064 | 0.0071 | 0.0065 | -0.0070 | 0.0000 | 0.0000 | 0.0071 |
| 2 | 0 | Tension PT: | 0.0000 | -0.0064 | 0.0071 | 0.0065 | -0.0070 | 0.0000 | 0.0000 | 0.0071 |
| 2 | 0 | Tension PT: | 0.0000 | -0.0064 | 0.0071 | 0.0065 | -0.0070 | 0.0000 | 0.0000 | 0.0071 |
| 2 | 0 | Tension PT: | 0.0000 | -0.0064 | 0.0071 | 0.0065 | -0.0070 | 0.0000 | 0.0000 | 0.0071 |
| 2 | 0 | Tension PT: | -0.0744 | -0.1628 | -0.1457 | 0.0140 | -0.0032 | 0.0000 | 0.0000 | -0.1628 |
| 2 | 0 | Add | -0.0744 | -0.1628 | -0.1457 | 0.0140 | -0.0032 | 0.0000 | 0.0000 | -0.1628 |
| 2 | 0 | Add | -0.0744 | -0.1628 | -0.1457 | 0.0140 | -0.0032 | 0.0000 | 0.0000 | -0.1628 |
| 2 | 0 | Add | -0.0744 | -0.1628 | -0.1457 | 0.0140 | -0.0032 | 0.0000 | 0.0000 | -0.1628 |
| 2 | 0 | Add | -0.0744 | -0.1627 | -0.1456 | 0.0140 | -0.0032 | 0.0000 | 0.0000 | -0.1627 |
| 2 | 0 | Add | -0.0744 | -0.1627 | -0.1456 | 0.0140 | -0.0032 | 0.0000 | 0.0000 | -0.1627 |
| 2 | 0 | Backfill to Grade: | -0.0744 | -0.1627 | -0.1456 | 0.0140 | -0.0032 | 0.0000 | 0.0000 | -0.1627 |
| 2 | 0 | Backfill to Grade: | -0.0744 | -0.1627 | -0.1456 | 0.0140 | -0.0032 | 0.0000 | 0.0000 | -0.1627 |
| 2 | 0 | Backfill to Grade: | -0.0744 | -0.1627 | -0.1456 | 0.0140 | -0.0032 | 0.0000 | 0.0000 | -0.1627 |
| 2 | 0 | Backfill to Grade: | -0.0743 | -0.1627 | -0.1455 | 0.0140 | -0.0032 | 0.0000 | 0.0000 | -0.1627 |
| 2 | 0 | Backfill to Grade: | -0.0673 | -0.0865 | -0.0677 | -0.0481 | -0.0669 | 0.0000 | 0.0000 | -0.0865 |
| 2 | 0 | Backfill to Grade: | -0.0654 | -0.0629 | -0.0491 | -0.0679 | -0.0816 | 0.0000 | 0.0000 | -0.0816 |
| 2 | 0 | Pave: Pave: | -0.0673 | -0.0865 | -0.0677 | -0.0481 | -0.0669 | 0.0000 | 0.0000 | -0.0865 |
| 2 | 0 | Pave: Pave: | -0.0673 | -0.0865 | -0.0677 | -0.0481 | -0.0669 | 0.0000 | 0.0000 | -0.0865 |
| 2 | 0 | Pave: Pave: PT | -0.0673 | -0.0865 | -0.0677 | -0.0481 | -0.0669 | 0.0000 | 0.0000 | -0.0865 |
| 2 | 0 | Pave: Pave: | -0.0673 | -0.0866 | -0.0677 | -0.0481 | -0.0669 | 0.0000 | 0.0000 | -0.0866 |
| 2 | 0 | Pave: Pave: step | -0.0673 | -0.0866 | -0.0677 | -0.0481 | -0.0669 | 0.0000 | 0.0000 | -0.0866 |
| 2 | 0 | Open Bridge to | -0.0673 | -0.0866 | -0.0677 | -0.0481 | -0.0669 | 0.0000 | 0.0000 | -0.0866 |
| 2 | 0 | Open Bridge to | -0.0673 | -0.0866 | -0.0677 | -0.0481 | -0.0669 | 0.0000 | 0.0000 | -0.0866 |
| 2 | 0 | Open Bridge to | -0.0673 | -0.0866 | -0.0677 | -0.0481 | -0.0669 | 0.0000 | 0.0000 | -0.0866 |
| 2 | 0 | Open Bridge to | -0.0673 | -0.0865 | -0.0677 | -0.0481 | -0.0669 | 0.0000 | 0.0000 | -0.0865 |
| 2 | 0 | Open Bridge to | -0.0649 | -0.0569 | -0.0445 | -0.0729 | -0.0853 | 0.0000 | 0.0000 | -0.0853 |
| 2 | 0 | Open Bridge to | -0.0654 | -0.0629 | -0.0491 | -0.0679 | -0.0816 | 0.0000 | 0.0000 | -0.0816 |
| 2 | 0 | Partial Live Load | -0.0673 | -0.0865 | -0.0677 | -0.0481 | -0.0669 | 0.0000 | 0.0000 | -0.0865 |
| 2 | 0 | Partial Live Load | -0.0673 | -0.0865 | -0.0677 | -0.0481 | -0.0669 | 0.0000 | 0.0000 | -0.0865 |
| 2 | 0 | Partial Live Load | -0.0673 | -0.0865 | -0.0677 | -0.0481 | -0.0669 | 0.0000 | 0.0000 | -0.0865 |
| 2 | 0 | Partial Live Load | -0.0673 | -0.0865 | -0.0677 | -0.0481 | -0.0669 | 0.0000 | 0.0000 | -0.0865 |

## RESULT : Member Stresses

| Member | Station | Result Case | (P/A) @ Centroid (kips/in²) | Normal Stress @ Point 1 (kips/in²) | Normal Stress @ Point 2 (kips/in²) | Normal Stress @ Point 3 (kips/in²) | Normal Stress @ Point 4 (kips/in²) | Normal Stress @ Point 5 | Normal Stress @ Point 6 | Max ABS Total Stress (kips/in²) |
|---|---|---|---|---|---|---|---|---|---|---|
| 2 | 0 | Partial Live Load | -0.0671 | -0.0836 | -0.0654 | -0.0506 | -0.0688 | 0.0000 | 0.0000 | -0.0836 |
| 2 | 0 | Remove Long | -0.0671 | -0.0836 | -0.0654 | -0.0506 | -0.0688 | 0.0000 | 0.0000 | -0.0836 |
| 2 | 0 | Remove Long | -0.0671 | -0.0836 | -0.0654 | -0.0506 | -0.0688 | 0.0000 | 0.0000 | -0.0836 |
| 2 | 0 | Remove Long | -0.0671 | -0.0836 | -0.0654 | -0.0506 | -0.0688 | 0.0000 | 0.0000 | -0.0836 |
| 2 | 0 | Remove Long | -0.0639 | -0.0769 | -0.0588 | -0.0509 | -0.0689 | 0.0000 | 0.0000 | -0.0769 |
| 2 | 0 | Remove Long | -0.0641 | -0.0798 | -0.0612 | -0.0484 | -0.0671 | 0.0000 | 0.0000 | -0.0798 |
| 2 | 0 | Long Term | -0.0641 | -0.0798 | -0.0612 | -0.0484 | -0.0671 | 0.0000 | 0.0000 | -0.0798 |
| 2 | 0 | Long Term | -0.0641 | -0.0798 | -0.0612 | -0.0484 | -0.0671 | 0.0000 | 0.0000 | -0.0798 |
| 2 | 0 | Long Term | -0.0641 | -0.0798 | -0.0612 | -0.0484 | -0.0671 | 0.0000 | 0.0000 | -0.0798 |
| 2 | 0 | Long Term | -0.0640 | -0.0796 | -0.0609 | -0.0484 | -0.0671 | 0.0000 | 0.0000 | -0.0796 |
| 2 | 0 | Long Term | -0.0621 | -0.0559 | -0.0423 | -0.0682 | -0.0818 | 0.0000 | 0.0000 | -0.0818 |
| 2 | 0 | Long Term | -0.0616 | -0.0500 | -0.0377 | -0.0732 | -0.0855 | 0.0000 | 0.0000 | -0.0855 |
| 2 | 0 | Long Term | -0.0573 | -0.0027 | 0.0088 | -0.1119 | -0.1234 | 0.0000 | 0.0000 | -0.1234 |
| 2 | 0 | Strength Check: | -0.0640 | -0.0796 | -0.0609 | -0.0484 | -0.0671 | 0.0000 | 0.0000 | -0.0796 |
| 2 | 0 | Strength Check: | -0.0640 | -0.0796 | -0.0609 | -0.0484 | -0.0671 | 0.0000 | 0.0000 | -0.0796 |
| 2 | 0 | Strength Check: | -0.0640 | -0.0796 | -0.0609 | -0.0484 | -0.0671 | 0.0000 | 0.0000 | -0.0796 |
| 2 | 0 | Strength Check: | -0.0640 | -0.0796 | -0.0609 | -0.0484 | -0.0671 | 0.0000 | 0.0000 | -0.0796 |
| 2 | 0 | Strength Check: | 0.0071 | 0.0698 | 0.0849 | -0.0556 | -0.0708 | 0.0000 | 0.0000 | 0.0849 |
| 2 | 0 | Strength Check: | -0.0573 | -0.0027 | 0.0088 | -0.1119 | -0.1234 | 0.0000 | 0.0000 | -0.1234 |
| 2 | 1 | Set Precast In | 0.0000 | 0.0000 | 0.0000 | 0.0000 | 0.0000 | 0.0000 | 0.0000 | 0.0000 |
| 2 | 1 | Set Precast In | 0.0001 | 0.0014 | -0.0007 | -0.0013 | 0.0008 | 0.0000 | 0.0000 | 0.0014 |
| 2 | 1 | Tension PT: | 0.0001 | 0.0014 | -0.0007 | -0.0013 | 0.0008 | 0.0000 | 0.0000 | 0.0014 |
| 2 | 1 | Tension PT: | 0.0001 | 0.0014 | -0.0007 | -0.0013 | 0.0008 | 0.0000 | 0.0000 | 0.0014 |
| 2 | 1 | Tension PT: | 0.0001 | 0.0014 | -0.0007 | -0.0013 | 0.0008 | 0.0000 | 0.0000 | 0.0014 |
| 2 | 1 | Tension PT: | 0.0001 | 0.0014 | -0.0007 | -0.0013 | 0.0008 | 0.0000 | 0.0000 | 0.0014 |
| 2 | 1 | Tension PT: | -0.0743 | -0.1539 | -0.1535 | 0.0054 | 0.0050 | 0.0000 | 0.0000 | -0.1539 |
| 2 | 1 | Add | -0.0743 | -0.1539 | -0.1535 | 0.0054 | 0.0050 | 0.0000 | 0.0000 | -0.1539 |
| 2 | 1 | Add | -0.0743 | -0.1539 | -0.1535 | 0.0054 | 0.0050 | 0.0000 | 0.0000 | -0.1539 |
| 2 | 1 | Add | -0.0743 | -0.1539 | -0.1535 | 0.0054 | 0.0050 | 0.0000 | 0.0000 | -0.1539 |
| 2 | 1 | Add | -0.0742 | -0.1538 | -0.1535 | 0.0054 | 0.0050 | 0.0000 | 0.0000 | -0.1538 |
| 2 | 1 | Add | -0.0742 | -0.1521 | -0.1552 | 0.0037 | 0.0068 | 0.0000 | 0.0000 | -0.1552 |
| 2 | 1 | Backfill to Grade: | -0.0742 | -0.1521 | -0.1552 | 0.0037 | 0.0068 | 0.0000 | 0.0000 | -0.1552 |
| 2 | 1 | Backfill to Grade: | -0.0742 | -0.1521 | -0.1552 | 0.0037 | 0.0068 | 0.0000 | 0.0000 | -0.1552 |
| 2 | 1 | Backfill to Grade: | -0.0742 | -0.1521 | -0.1552 | 0.0037 | 0.0068 | 0.0000 | 0.0000 | -0.1552 |

## RESULT : Member Stresses

| Member | Station | Result Case | (P/A) @ Centroid (kips/in²) | Normal Stress @ Point 1 (kips/in²) | Normal Stress @ Point 2 (kips/in²) | Normal Stress @ Point 3 (kips/in²) | Normal Stress @ Point 4 (kips/in²) | Normal Stress @ Point 5 | Normal Stress @ Point 6 | Max ABS Total Stress (kips/in²) |
|---|---|---|---|---|---|---|---|---|---|---|
| 2 | 1 | Backfill to Grade: | -0.0742 | -0.1520 | -0.1551 | 0.0037 | 0.0068 | 0.0000 | 0.0000 | -0.1551 |
| 2 | 1 | Backfill to Grade: | -0.0672 | -0.0789 | -0.0803 | -0.0554 | -0.0540 | 0.0000 | 0.0000 | -0.0803 |
| 2 | 1 | Backfill to Grade: | -0.0652 | -0.0559 | -0.0623 | -0.0745 | -0.0681 | 0.0000 | 0.0000 | -0.0745 |
| 2 | 1 | Pave: Pave: | -0.0672 | -0.0789 | -0.0803 | -0.0554 | -0.0540 | 0.0000 | 0.0000 | -0.0803 |
| 2 | 1 | Pave: Pave: | -0.0672 | -0.0789 | -0.0803 | -0.0554 | -0.0540 | 0.0000 | 0.0000 | -0.0803 |
| 2 | 1 | Pave: Pave: PT | -0.0672 | -0.0789 | -0.0803 | -0.0554 | -0.0540 | 0.0000 | 0.0000 | -0.0803 |
| 2 | 1 | Pave: Pave: | -0.0672 | -0.0789 | -0.0803 | -0.0554 | -0.0541 | 0.0000 | 0.0000 | -0.0803 |
| 2 | 1 | Pave: Pave: step | -0.0672 | -0.0787 | -0.0805 | -0.0557 | -0.0538 | 0.0000 | 0.0000 | -0.0805 |
| 2 | 1 | Open Bridge to | -0.0672 | -0.0787 | -0.0805 | -0.0557 | -0.0538 | 0.0000 | 0.0000 | -0.0805 |
| 2 | 1 | Open Bridge to | -0.0672 | -0.0787 | -0.0805 | -0.0557 | -0.0538 | 0.0000 | 0.0000 | -0.0805 |
| 2 | 1 | Open Bridge to | -0.0672 | -0.0787 | -0.0805 | -0.0557 | -0.0538 | 0.0000 | 0.0000 | -0.0805 |
| 2 | 1 | Open Bridge to | -0.0672 | -0.0787 | -0.0805 | -0.0557 | -0.0538 | 0.0000 | 0.0000 | -0.0805 |
| 2 | 1 | Open Bridge to | -0.0647 | -0.0487 | -0.0593 | -0.0808 | -0.0702 | 0.0000 | 0.0000 | -0.0808 |
| 2 | 1 | Open Bridge to | -0.0652 | -0.0547 | -0.0635 | -0.0757 | -0.0669 | 0.0000 | 0.0000 | -0.0757 |
| 2 | 1 | Partial Live Load | -0.0672 | -0.0787 | -0.0805 | -0.0557 | -0.0538 | 0.0000 | 0.0000 | -0.0805 |
| 2 | 1 | Partial Live Load | -0.0672 | -0.0787 | -0.0805 | -0.0557 | -0.0538 | 0.0000 | 0.0000 | -0.0805 |
| 2 | 1 | Partial Live Load | -0.0672 | -0.0787 | -0.0805 | -0.0557 | -0.0538 | 0.0000 | 0.0000 | -0.0805 |
| 2 | 1 | Partial Live Load | -0.0672 | -0.0787 | -0.0805 | -0.0557 | -0.0538 | 0.0000 | 0.0000 | -0.0805 |
| 2 | 1 | Partial Live Load | -0.0669 | -0.0757 | -0.0784 | -0.0582 | -0.0554 | 0.0000 | 0.0000 | -0.0784 |
| 2 | 1 | Remove Long | -0.0669 | -0.0757 | -0.0784 | -0.0582 | -0.0554 | 0.0000 | 0.0000 | -0.0784 |
| 2 | 1 | Remove Long | -0.0669 | -0.0757 | -0.0784 | -0.0582 | -0.0554 | 0.0000 | 0.0000 | -0.0784 |
| 2 | 1 | Remove Long | -0.0669 | -0.0757 | -0.0784 | -0.0582 | -0.0554 | 0.0000 | 0.0000 | -0.0784 |
| 2 | 1 | Remove Long | -0.0638 | -0.0690 | -0.0718 | -0.0585 | -0.0557 | 0.0000 | 0.0000 | -0.0718 |
| 2 | 1 | Remove Long | -0.0640 | -0.0720 | -0.0740 | -0.0560 | -0.0540 | 0.0000 | 0.0000 | -0.0740 |
| 2 | 1 | Long Term | -0.0640 | -0.0720 | -0.0740 | -0.0560 | -0.0540 | 0.0000 | 0.0000 | -0.0740 |
| 2 | 1 | Long Term | -0.0640 | -0.0720 | -0.0740 | -0.0560 | -0.0540 | 0.0000 | 0.0000 | -0.0740 |
| 2 | 1 | Long Term | -0.0640 | -0.0720 | -0.0740 | -0.0560 | -0.0540 | 0.0000 | 0.0000 | -0.0740 |
| 2 | 1 | Long Term | -0.0639 | -0.0717 | -0.0737 | -0.0560 | -0.0540 | 0.0000 | 0.0000 | -0.0737 |
| 2 | 1 | Long Term | -0.0619 | -0.0478 | -0.0567 | -0.0761 | -0.0671 | 0.0000 | 0.0000 | -0.0761 |
| 2 | 1 | Long Term | -0.0614 | -0.0418 | -0.0525 | -0.0811 | -0.0704 | 0.0000 | 0.0000 | -0.0811 |
| 2 | 1 | Long Term | -0.0571 | 0.0045 | -0.0137 | -0.1188 | -0.1006 | 0.0000 | 0.0000 | -0.1188 |
| 2 | 1 | Strength Check: | -0.0639 | -0.0717 | -0.0737 | -0.0560 | -0.0540 | 0.0000 | 0.0000 | -0.0737 |
| 2 | 1 | Strength Check: | -0.0639 | -0.0717 | -0.0737 | -0.0560 | -0.0540 | 0.0000 | 0.0000 | -0.0737 |
| 2 | 1 | Strength Check: | -0.0639 | -0.0717 | -0.0737 | -0.0560 | -0.0540 | 0.0000 | 0.0000 | -0.0737 |

## RESULT : Member Stresses

| Member | Station | Result Case | (P/A) @ Centroid (kips/in²) | Normal Stress @ Point 1 (kips/in²) | Normal Stress @ Point 2 (kips/in²) | Normal Stress @ Point 3 (kips/in²) | Normal Stress @ Point 4 (kips/in²) | Normal Stress @ Point 5 | Normal Stress @ Point 6 | Max ABS Total Stress (kips/in²) |
|---|---|---|---|---|---|---|---|---|---|---|
| 2 | 1 | Strength Check: | -0.0639 | -0.0717 | -0.0737 | -0.0560 | -0.0540 | 0.0000 | 0.0000 | -0.0737 |
| 2 | 1 | Strength Check: | 0.0071 | 0.0765 | 0.0722 | -0.0623 | -0.0580 | 0.0000 | 0.0000 | 0.0765 |
| 2 | 1 | Strength Check: | -0.0571 | 0.0045 | -0.0137 | -0.1188 | -0.1006 | 0.0000 | 0.0000 | -0.1188 |
| 2 | 2 | Set Precast In | 0.0000 | 0.0000 | 0.0000 | 0.0000 | 0.0000 | 0.0000 | 0.0000 | 0.0000 |
| 2 | 2 | Set Precast In | 0.0001 | 0.0110 | -0.0103 | -0.0109 | 0.0104 | 0.0000 | 0.0000 | 0.0110 |
| 2 | 2 | Tension PT: | 0.0001 | 0.0110 | -0.0103 | -0.0109 | 0.0104 | 0.0000 | 0.0000 | 0.0110 |
| 2 | 2 | Tension PT: | 0.0001 | 0.0110 | -0.0103 | -0.0109 | 0.0104 | 0.0000 | 0.0000 | 0.0110 |
| 2 | 2 | Tension PT: | 0.0001 | 0.0110 | -0.0103 | -0.0109 | 0.0104 | 0.0000 | 0.0000 | 0.0110 |
| 2 | 2 | Tension PT: | 0.0001 | 0.0110 | -0.0103 | -0.0109 | 0.0104 | 0.0000 | 0.0000 | 0.0110 |
| 2 | 2 | Tension PT: | -0.0743 | -0.1438 | -0.1639 | -0.0048 | 0.0153 | 0.0000 | 0.0000 | -0.1639 |
| 2 | 2 | Add | -0.0743 | -0.1438 | -0.1639 | -0.0048 | 0.0153 | 0.0000 | 0.0000 | -0.1639 |
| 2 | 2 | Add | -0.0743 | -0.1438 | -0.1639 | -0.0048 | 0.0153 | 0.0000 | 0.0000 | -0.1639 |
| 2 | 2 | Add | -0.0743 | -0.1438 | -0.1639 | -0.0048 | 0.0153 | 0.0000 | 0.0000 | -0.1639 |
| 2 | 2 | Add | -0.0743 | -0.1437 | -0.1638 | -0.0048 | 0.0152 | 0.0000 | 0.0000 | -0.1638 |
| 2 | 2 | Add | -0.0742 | -0.1368 | -0.1707 | -0.0117 | 0.0222 | 0.0000 | 0.0000 | -0.1707 |
| 2 | 2 | Backfill to Grade: | -0.0742 | -0.1368 | -0.1707 | -0.0117 | 0.0222 | 0.0000 | 0.0000 | -0.1707 |
| 2 | 2 | Backfill to Grade: | -0.0742 | -0.1368 | -0.1707 | -0.0117 | 0.0222 | 0.0000 | 0.0000 | -0.1707 |
| 2 | 2 | Backfill to Grade: | -0.0742 | -0.1368 | -0.1707 | -0.0117 | 0.0222 | 0.0000 | 0.0000 | -0.1707 |
| 2 | 2 | Backfill to Grade: | -0.0742 | -0.1367 | -0.1706 | -0.0117 | 0.0222 | 0.0000 | 0.0000 | -0.1706 |
| 2 | 2 | Backfill to Grade: | -0.0672 | -0.0380 | -0.0700 | -0.0964 | -0.0644 | 0.0000 | 0.0000 | -0.0964 |
| 2 | 2 | Backfill to Grade: | -0.0653 | -0.0068 | -0.0439 | -0.1238 | -0.0867 | 0.0000 | 0.0000 | -0.1238 |
| 2 | 2 | Pave: Pave: | -0.0672 | -0.0380 | -0.0700 | -0.0964 | -0.0644 | 0.0000 | 0.0000 | -0.0964 |
| 2 | 2 | Pave: Pave: | -0.0672 | -0.0380 | -0.0700 | -0.0964 | -0.0644 | 0.0000 | 0.0000 | -0.0964 |
| 2 | 2 | Pave: Pave: PT | -0.0672 | -0.0380 | -0.0700 | -0.0964 | -0.0644 | 0.0000 | 0.0000 | -0.0964 |
| 2 | 2 | Pave: Pave: | -0.0672 | -0.0380 | -0.0701 | -0.0964 | -0.0644 | 0.0000 | 0.0000 | -0.0964 |
| 2 | 2 | Pave: Pave: step | -0.0672 | -0.0370 | -0.0711 | -0.0974 | -0.0633 | 0.0000 | 0.0000 | -0.0974 |
| 2 | 2 | Open Bridge to | -0.0672 | -0.0370 | -0.0711 | -0.0974 | -0.0633 | 0.0000 | 0.0000 | -0.0974 |
| 2 | 2 | Open Bridge to | -0.0672 | -0.0370 | -0.0711 | -0.0974 | -0.0633 | 0.0000 | 0.0000 | -0.0974 |
| 2 | 2 | Open Bridge to | -0.0672 | -0.0370 | -0.0711 | -0.0974 | -0.0633 | 0.0000 | 0.0000 | -0.0974 |
| 2 | 2 | Open Bridge to | -0.0672 | -0.0370 | -0.0711 | -0.0975 | -0.0633 | 0.0000 | 0.0000 | -0.0975 |
| 2 | 2 | Open Bridge to | -0.0648 | 0.0068 | -0.0431 | -0.1363 | -0.0865 | 0.0000 | 0.0000 | -0.1363 |
| 2 | 2 | Open Bridge to | -0.0653 | -0.0020 | -0.0487 | -0.1286 | -0.0819 | 0.0000 | 0.0000 | -0.1286 |
| 2 | 2 | Partial Live Load | -0.0672 | -0.0370 | -0.0711 | -0.0975 | -0.0633 | 0.0000 | 0.0000 | -0.0975 |
| 2 | 2 | Partial Live Load | -0.0672 | -0.0370 | -0.0711 | -0.0975 | -0.0633 | 0.0000 | 0.0000 | -0.0975 |

## RESULT : Member Stresses

| Member | Station | Result Case | (P/A) @ Centroid (kips/in²) | Normal Stress @ Point 1 (kips/in²) | Normal Stress @ Point 2 (kips/in²) | Normal Stress @ Point 3 (kips/in²) | Normal Stress @ Point 4 (kips/in²) | Normal Stress @ Point 5 | Normal Stress @ Point 6 | Max ABS Total Stress (kips/in²) |
|---|---|---|---|---|---|---|---|---|---|---|
| 2 | 2 | Partial Live Load | -0.0672 | -0.0370 | -0.0711 | -0.0975 | -0.0633 | 0.0000 | 0.0000 | -0.0975 |
| 2 | 2 | Partial Live Load | -0.0672 | -0.0370 | -0.0711 | -0.0975 | -0.0633 | 0.0000 | 0.0000 | -0.0975 |
| 2 | 2 | Partial Live Load | -0.0670 | -0.0326 | -0.0683 | -0.1013 | -0.0657 | 0.0000 | 0.0000 | -0.1013 |
| 2 | 2 | Remove Long | -0.0670 | -0.0326 | -0.0683 | -0.1013 | -0.0657 | 0.0000 | 0.0000 | -0.1013 |
| 2 | 2 | Remove Long | -0.0670 | -0.0326 | -0.0683 | -0.1013 | -0.0657 | 0.0000 | 0.0000 | -0.1013 |
| 2 | 2 | Remove Long | -0.0670 | -0.0326 | -0.0683 | -0.1013 | -0.0657 | 0.0000 | 0.0000 | -0.1013 |
| 2 | 2 | Remove Long | -0.0639 | -0.0262 | -0.0619 | -0.1016 | -0.0659 | 0.0000 | 0.0000 | -0.1016 |
| 2 | 2 | Remove Long | -0.0641 | -0.0305 | -0.0647 | -0.0977 | -0.0635 | 0.0000 | 0.0000 | -0.0977 |
| 2 | 2 | Long Term | -0.0641 | -0.0305 | -0.0647 | -0.0977 | -0.0635 | 0.0000 | 0.0000 | -0.0977 |
| 2 | 2 | Long Term | -0.0641 | -0.0305 | -0.0647 | -0.0977 | -0.0635 | 0.0000 | 0.0000 | -0.0977 |
| 2 | 2 | Long Term | -0.0641 | -0.0305 | -0.0647 | -0.0977 | -0.0635 | 0.0000 | 0.0000 | -0.0977 |
| 2 | 2 | Long Term | -0.0639 | -0.0302 | -0.0643 | -0.0977 | -0.0636 | 0.0000 | 0.0000 | -0.0977 |
| 2 | 2 | Long Term | -0.0620 | 0.0048 | -0.0419 | -0.1288 | -0.0821 | 0.0000 | 0.0000 | -0.1288 |
| 2 | 2 | Long Term | -0.0615 | 0.0136 | -0.0363 | -0.1366 | -0.0867 | 0.0000 | 0.0000 | -0.1366 |
| 2 | 2 | Long Term | -0.0572 | 0.0623 | -0.0086 | -0.1768 | -0.1059 | 0.0000 | 0.0000 | -0.1768 |
| 2 | 2 | Strength Check: | -0.0639 | -0.0302 | -0.0643 | -0.0977 | -0.0636 | 0.0000 | 0.0000 | -0.0977 |
| 2 | 2 | Strength Check: | -0.0639 | -0.0302 | -0.0643 | -0.0977 | -0.0636 | 0.0000 | 0.0000 | -0.0977 |
| 2 | 2 | Strength Check: | -0.0639 | -0.0302 | -0.0643 | -0.0977 | -0.0636 | 0.0000 | 0.0000 | -0.0977 |
| 2 | 2 | Strength Check: | -0.0639 | -0.0302 | -0.0643 | -0.0977 | -0.0636 | 0.0000 | 0.0000 | -0.0977 |
| 2 | 2 | Strength Check: | 0.0071 | 0.1177 | 0.0824 | -0.1035 | -0.0682 | 0.0000 | 0.0000 | 0.1177 |
| 2 | 2 | Strength Check: | -0.0572 | 0.0623 | -0.0086 | -0.1768 | -0.1059 | 0.0000 | 0.0000 | -0.1768 |
| 3 | 0 | Set Precast In | 0.0000 | 0.0000 | 0.0000 | 0.0000 | 0.0000 | 0.0000 | 0.0000 | 0.0000 |
| 3 | 0 | Set Precast In | 0.0000 | 0.0106 | -0.0107 | -0.0107 | 0.0106 | 0.0000 | 0.0000 | -0.0107 |
| 3 | 0 | Tension PT: | 0.0000 | 0.0106 | -0.0107 | -0.0107 | 0.0106 | 0.0000 | 0.0000 | -0.0107 |
| 3 | 0 | Tension PT: | 0.0000 | 0.0106 | -0.0107 | -0.0107 | 0.0106 | 0.0000 | 0.0000 | -0.0107 |
| 3 | 0 | Tension PT: | 0.0000 | 0.0106 | -0.0107 | -0.0107 | 0.0106 | 0.0000 | 0.0000 | -0.0107 |
| 3 | 0 | Tension PT: | 0.0000 | 0.0106 | -0.0107 | -0.0107 | 0.0106 | 0.0000 | 0.0000 | -0.0107 |
| 3 | 0 | Tension PT: | -0.0744 | -0.1442 | -0.1643 | -0.0046 | 0.0154 | 0.0000 | 0.0000 | -0.1643 |
| 3 | 0 | Add | -0.0744 | -0.1442 | -0.1643 | -0.0046 | 0.0154 | 0.0000 | 0.0000 | -0.1643 |
| 3 | 0 | Add | -0.0744 | -0.1442 | -0.1643 | -0.0046 | 0.0154 | 0.0000 | 0.0000 | -0.1643 |
| 3 | 0 | Add | -0.0744 | -0.1442 | -0.1643 | -0.0046 | 0.0154 | 0.0000 | 0.0000 | -0.1643 |
| 3 | 0 | Add | -0.0744 | -0.1442 | -0.1642 | -0.0046 | 0.0154 | 0.0000 | 0.0000 | -0.1642 |
| 3 | 0 | Add | -0.0744 | -0.1373 | -0.1712 | -0.0116 | 0.0223 | 0.0000 | 0.0000 | -0.1712 |
| 3 | 0 | Backfill to Grade: | -0.0745 | -0.1373 | -0.1712 | -0.0116 | 0.0223 | 0.0000 | 0.0000 | -0.1712 |

## RESULT : Member Stresses

| Member | Station | Result Case | (P/A) @ Centroid (kips/in²) | Normal Stress @ Point 1 (kips/in²) | Normal Stress @ Point 2 (kips/in²) | Normal Stress @ Point 3 (kips/in²) | Normal Stress @ Point 4 (kips/in²) | Normal Stress @ Point 5 | Normal Stress @ Point 6 | Max ABS Total Stress (kips/in²) |
|---|---|---|---|---|---|---|---|---|---|---|
| 3 | 0 | Backfill to Grade: | -0.0745 | -0.1373 | -0.1712 | -0.0116 | 0.0223 | 0.0000 | 0.0000 | -0.1712 |
| 3 | 0 | Backfill to Grade: | -0.0745 | -0.1373 | -0.1712 | -0.0116 | 0.0223 | 0.0000 | 0.0000 | -0.1712 |
| 3 | 0 | Backfill to Grade: | -0.0744 | -0.1372 | -0.1711 | -0.0116 | 0.0223 | 0.0000 | 0.0000 | -0.1711 |
| 3 | 0 | Backfill to Grade: | -0.0674 | -0.0390 | -0.0711 | -0.0958 | -0.0638 | 0.0000 | 0.0000 | -0.0958 |
| 3 | 0 | Backfill to Grade: | -0.0655 | -0.0079 | -0.0449 | -0.1231 | -0.0861 | 0.0000 | 0.0000 | -0.1231 |
| 3 | 0 | Pave: Pave: | -0.0674 | -0.0390 | -0.0711 | -0.0958 | -0.0638 | 0.0000 | 0.0000 | -0.0958 |
| 3 | 0 | Pave: Pave: | -0.0674 | -0.0390 | -0.0711 | -0.0958 | -0.0638 | 0.0000 | 0.0000 | -0.0958 |
| 3 | 0 | Pave: Pave: PT | -0.0674 | -0.0390 | -0.0711 | -0.0958 | -0.0638 | 0.0000 | 0.0000 | -0.0958 |
| 3 | 0 | Pave: Pave: | -0.0674 | -0.0391 | -0.0711 | -0.0958 | -0.0638 | 0.0000 | 0.0000 | -0.0958 |
| 3 | 0 | Pave: Pave: step | -0.0674 | -0.0380 | -0.0721 | -0.0968 | -0.0627 | 0.0000 | 0.0000 | -0.0968 |
| 3 | 0 | Open Bridge to | -0.0674 | -0.0380 | -0.0721 | -0.0968 | -0.0627 | 0.0000 | 0.0000 | -0.0968 |
| 3 | 0 | Open Bridge to | -0.0674 | -0.0380 | -0.0721 | -0.0968 | -0.0627 | 0.0000 | 0.0000 | -0.0968 |
| 3 | 0 | Open Bridge to | -0.0674 | -0.0380 | -0.0721 | -0.0968 | -0.0627 | 0.0000 | 0.0000 | -0.0968 |
| 3 | 0 | Open Bridge to | -0.0674 | -0.0380 | -0.0721 | -0.0968 | -0.0627 | 0.0000 | 0.0000 | -0.0968 |
| 3 | 0 | Open Bridge to | -0.0651 | 0.0056 | -0.0442 | -0.1358 | -0.0859 | 0.0000 | 0.0000 | -0.1358 |
| 3 | 0 | Open Bridge to | -0.0656 | -0.0031 | -0.0498 | -0.1280 | -0.0813 | 0.0000 | 0.0000 | -0.1280 |
| 3 | 0 | Partial Live Load | -0.0674 | -0.0380 | -0.0721 | -0.0968 | -0.0627 | 0.0000 | 0.0000 | -0.0968 |
| 3 | 0 | Partial Live Load | -0.0674 | -0.0380 | -0.0721 | -0.0968 | -0.0627 | 0.0000 | 0.0000 | -0.0968 |
| 3 | 0 | Partial Live Load | -0.0674 | -0.0380 | -0.0721 | -0.0968 | -0.0627 | 0.0000 | 0.0000 | -0.0968 |
| 3 | 0 | Partial Live Load | -0.0674 | -0.0380 | -0.0721 | -0.0968 | -0.0627 | 0.0000 | 0.0000 | -0.0968 |
| 3 | 0 | Partial Live Load | -0.0672 | -0.0337 | -0.0693 | -0.1007 | -0.0651 | 0.0000 | 0.0000 | -0.1007 |
| 3 | 0 | Remove Long | -0.0672 | -0.0337 | -0.0693 | -0.1007 | -0.0651 | 0.0000 | 0.0000 | -0.1007 |
| 3 | 0 | Remove Long | -0.0672 | -0.0337 | -0.0693 | -0.1007 | -0.0651 | 0.0000 | 0.0000 | -0.1007 |
| 3 | 0 | Remove Long | -0.0672 | -0.0337 | -0.0693 | -0.1007 | -0.0651 | 0.0000 | 0.0000 | -0.1007 |
| 3 | 0 | Remove Long | -0.0641 | -0.0272 | -0.0629 | -0.1010 | -0.0653 | 0.0000 | 0.0000 | -0.1010 |
| 3 | 0 | Remove Long | -0.0643 | -0.0316 | -0.0657 | -0.0971 | -0.0629 | 0.0000 | 0.0000 | -0.0971 |
| 3 | 0 | Long Term | -0.0643 | -0.0316 | -0.0657 | -0.0971 | -0.0629 | 0.0000 | 0.0000 | -0.0971 |
| 3 | 0 | Long Term | -0.0643 | -0.0316 | -0.0657 | -0.0971 | -0.0629 | 0.0000 | 0.0000 | -0.0971 |
| 3 | 0 | Long Term | -0.0643 | -0.0316 | -0.0657 | -0.0971 | -0.0629 | 0.0000 | 0.0000 | -0.0971 |
| 3 | 0 | Long Term | -0.0642 | -0.0312 | -0.0654 | -0.0971 | -0.0630 | 0.0000 | 0.0000 | -0.0971 |
| 3 | 0 | Long Term | -0.0623 | 0.0037 | -0.0431 | -0.1283 | -0.0815 | 0.0000 | 0.0000 | -0.1283 |
| 3 | 0 | Long Term | -0.0618 | 0.0124 | -0.0375 | -0.1361 | -0.0861 | 0.0000 | 0.0000 | -0.1361 |
| 3 | 0 | Long Term | -0.0576 | 0.0610 | -0.0099 | -0.1762 | -0.1054 | 0.0000 | 0.0000 | -0.1762 |
| 3 | 0 | Strength Check: | -0.0642 | -0.0312 | -0.0654 | -0.0971 | -0.0630 | 0.0000 | 0.0000 | -0.0971 |

## RESULT : Member Stresses

| Member | Station | Result Case | (P/A) @ Centroid (kips/in²) | Normal Stress @ Point 1 (kips/in²) | Normal Stress @ Point 2 (kips/in²) | Normal Stress @ Point 3 (kips/in²) | Normal Stress @ Point 4 (kips/in²) | Normal Stress @ Point 5 | Normal Stress @ Point 6 | Max ABS Total Stress (kips/in²) |
|---|---|---|---|---|---|---|---|---|---|---|
| 3 | 0 | Strength Check: | -0.0642 | -0.0312 | -0.0654 | -0.0971 | -0.0630 | 0.0000 | 0.0000 | -0.0971 |
| 3 | 0 | Strength Check: | -0.0642 | -0.0312 | -0.0654 | -0.0971 | -0.0630 | 0.0000 | 0.0000 | -0.0971 |
| 3 | 0 | Strength Check: | -0.0642 | -0.0312 | -0.0654 | -0.0971 | -0.0630 | 0.0000 | 0.0000 | -0.0971 |
| 3 | 0 | Strength Check: | 0.0069 | 0.1167 | 0.0813 | -0.1029 | -0.0676 | 0.0000 | 0.0000 | 0.1167 |
| 3 | 0 | Strength Check: | -0.0576 | 0.0610 | -0.0099 | -0.1762 | -0.1054 | 0.0000 | 0.0000 | -0.1762 |
| 3 | 1 | Set Precast In | 0.0000 | 0.0000 | 0.0000 | 0.0000 | 0.0000 | 0.0000 | 0.0000 | 0.0000 |
| 3 | 1 | Set Precast In | 0.0000 | 0.0011 | -0.0011 | -0.0011 | 0.0011 | 0.0000 | 0.0000 | -0.0011 |
| 3 | 1 | Tension PT: | 0.0000 | 0.0007 | -0.0007 | -0.0007 | 0.0007 | 0.0000 | 0.0000 | -0.0007 |
| 3 | 1 | Tension PT: | 0.0000 | 0.0007 | -0.0007 | -0.0007 | 0.0007 | 0.0000 | 0.0000 | -0.0007 |
| 3 | 1 | Tension PT: | 0.0000 | 0.0007 | -0.0007 | -0.0007 | 0.0007 | 0.0000 | 0.0000 | -0.0007 |
| 3 | 1 | Tension PT: | 0.0000 | 0.0007 | -0.0007 | -0.0007 | 0.0007 | 0.0000 | 0.0000 | -0.0007 |
| 3 | 1 | Tension PT: | -0.0742 | -0.1054 | -0.1062 | -0.0430 | -0.0422 | 0.0000 | 0.0000 | -0.1062 |
| 3 | 1 | Add | -0.0742 | -0.1054 | -0.1062 | -0.0430 | -0.0422 | 0.0000 | 0.0000 | -0.1062 |
| 3 | 1 | Add | -0.0742 | -0.1054 | -0.1062 | -0.0430 | -0.0422 | 0.0000 | 0.0000 | -0.1062 |
| 3 | 1 | Add | -0.0742 | -0.1054 | -0.1062 | -0.0430 | -0.0422 | 0.0000 | 0.0000 | -0.1062 |
| 3 | 1 | Add | -0.0742 | -0.1054 | -0.1061 | -0.0430 | -0.0422 | 0.0000 | 0.0000 | -0.1061 |
| 3 | 1 | Add | -0.0742 | -0.1099 | -0.1016 | -0.0384 | -0.0467 | 0.0000 | 0.0000 | -0.1099 |
| 3 | 1 | Backfill to Grade: | -0.0742 | -0.1107 | -0.1008 | -0.0376 | -0.0475 | 0.0000 | 0.0000 | -0.1107 |
| 3 | 1 | Backfill to Grade: | -0.0742 | -0.1107 | -0.1008 | -0.0376 | -0.0475 | 0.0000 | 0.0000 | -0.1107 |
| 3 | 1 | Backfill to Grade: | -0.0742 | -0.1107 | -0.1008 | -0.0376 | -0.0475 | 0.0000 | 0.0000 | -0.1107 |
| 3 | 1 | Backfill to Grade: | -0.0741 | -0.1107 | -0.1007 | -0.0376 | -0.0475 | 0.0000 | 0.0000 | -0.1107 |
| 3 | 1 | Backfill to Grade: | -0.0672 | -0.1462 | -0.1352 | 0.0118 | 0.0009 | 0.0000 | 0.0000 | -0.1462 |
| 3 | 1 | Backfill to Grade: | -0.0653 | -0.1567 | -0.1484 | 0.0261 | 0.0178 | 0.0000 | 0.0000 | -0.1567 |
| 3 | 1 | Pave: Pave: | -0.0672 | -0.1522 | -0.1413 | 0.0179 | 0.0069 | 0.0000 | 0.0000 | -0.1522 |
| 3 | 1 | Pave: Pave: | -0.0672 | -0.1522 | -0.1413 | 0.0179 | 0.0069 | 0.0000 | 0.0000 | -0.1522 |
| 3 | 1 | Pave: Pave: PT | -0.0672 | -0.1522 | -0.1413 | 0.0179 | 0.0069 | 0.0000 | 0.0000 | -0.1522 |
| 3 | 1 | Pave: Pave: | -0.0672 | -0.1523 | -0.1413 | 0.0179 | 0.0069 | 0.0000 | 0.0000 | -0.1523 |
| 3 | 1 | Pave: Pave: step | -0.0672 | -0.1529 | -0.1406 | 0.0185 | 0.0062 | 0.0000 | 0.0000 | -0.1529 |
| 3 | 1 | Open Bridge to | -0.0672 | -0.1541 | -0.1416 | 0.0197 | 0.0072 | 0.0000 | 0.0000 | -0.1541 |
| 3 | 1 | Open Bridge to | -0.0672 | -0.1541 | -0.1416 | 0.0197 | 0.0072 | 0.0000 | 0.0000 | -0.1541 |
| 3 | 1 | Open Bridge to | -0.0672 | -0.1541 | -0.1416 | 0.0197 | 0.0072 | 0.0000 | 0.0000 | -0.1541 |
| 3 | 1 | Open Bridge to | -0.0672 | -0.1541 | -0.1416 | 0.0197 | 0.0072 | 0.0000 | 0.0000 | -0.1541 |
| 3 | 1 | Open Bridge to | -0.0648 | -0.1703 | -0.1549 | 0.0407 | 0.0252 | 0.0000 | 0.0000 | -0.1703 |
| 3 | 1 | Open Bridge to | -0.0653 | -0.1671 | -0.1522 | 0.0365 | 0.0216 | 0.0000 | 0.0000 | -0.1671 |

## RESULT : Member Stresses

| Member | Station | Result Case | (P/A) @ Centroid (kips/in²) | Normal Stress @ Point 1 (kips/in²) | Normal Stress @ Point 2 (kips/in²) | Normal Stress @ Point 3 (kips/in²) | Normal Stress @ Point 4 (kips/in²) | Normal Stress @ Point 5 | Normal Stress @ Point 6 | Max ABS Total Stress (kips/in²) |
|---|---|---|---|---|---|---|---|---|---|---|
| 3 | 1 | Partial Live Load | -0.0672 | -0.1548 | -0.1423 | 0.0204 | 0.0079 | 0.0000 | 0.0000 | -0.1548 |
| 3 | 1 | Partial Live Load | -0.0672 | -0.1548 | -0.1423 | 0.0204 | 0.0079 | 0.0000 | 0.0000 | -0.1548 |
| 3 | 1 | Partial Live Load | -0.0672 | -0.1548 | -0.1423 | 0.0204 | 0.0079 | 0.0000 | 0.0000 | -0.1548 |
| 3 | 1 | Partial Live Load | -0.0672 | -0.1548 | -0.1423 | 0.0204 | 0.0079 | 0.0000 | 0.0000 | -0.1548 |
| 3 | 1 | Partial Live Load | -0.0669 | -0.1564 | -0.1436 | 0.0225 | 0.0097 | 0.0000 | 0.0000 | -0.1564 |
| 3 | 1 | Remove Long | -0.0670 | -0.1971 | -0.1766 | 0.0632 | 0.0427 | 0.0000 | 0.0000 | -0.1971 |
| 3 | 1 | Remove Long | -0.0670 | -0.1971 | -0.1766 | 0.0632 | 0.0427 | 0.0000 | 0.0000 | -0.1971 |
| 3 | 1 | Remove Long | -0.0670 | -0.1971 | -0.1766 | 0.0632 | 0.0427 | 0.0000 | 0.0000 | -0.1971 |
| 3 | 1 | Remove Long | -0.0639 | -0.1927 | -0.1722 | 0.0649 | 0.0445 | 0.0000 | 0.0000 | -0.1927 |
| 3 | 1 | Remove Long | -0.0641 | -0.1911 | -0.1709 | 0.0628 | 0.0427 | 0.0000 | 0.0000 | -0.1911 |
| 3 | 1 | Long Term | -0.0641 | -0.1904 | -0.1704 | 0.0621 | 0.0421 | 0.0000 | 0.0000 | -0.1904 |
| 3 | 1 | Long Term | -0.0641 | -0.1904 | -0.1704 | 0.0621 | 0.0421 | 0.0000 | 0.0000 | -0.1904 |
| 3 | 1 | Long Term | -0.0641 | -0.1904 | -0.1704 | 0.0621 | 0.0421 | 0.0000 | 0.0000 | -0.1904 |
| 3 | 1 | Long Term | -0.0639 | -0.1901 | -0.1701 | 0.0622 | 0.0422 | 0.0000 | 0.0000 | -0.1901 |
| 3 | 1 | Long Term | -0.0620 | -0.2031 | -0.1807 | 0.0790 | 0.0567 | 0.0000 | 0.0000 | -0.2031 |
| 3 | 1 | Long Term | -0.0616 | -0.2064 | -0.1834 | 0.0832 | 0.0603 | 0.0000 | 0.0000 | -0.2064 |
| 3 | 1 | Long Term | -0.0574 | -0.1914 | -0.1634 | 0.0767 | 0.0487 | 0.0000 | 0.0000 | -0.1914 |
| 3 | 1 | Strength Check: | -0.0639 | -0.1901 | -0.1701 | 0.0622 | 0.0422 | 0.0000 | 0.0000 | -0.1901 |
| 3 | 1 | Strength Check: | -0.0639 | -0.1901 | -0.1701 | 0.0622 | 0.0422 | 0.0000 | 0.0000 | -0.1901 |
| 3 | 1 | Strength Check: | -0.0639 | -0.1901 | -0.1701 | 0.0622 | 0.0422 | 0.0000 | 0.0000 | -0.1901 |
| 3 | 1 | Strength Check: | -0.0639 | -0.1901 | -0.1701 | 0.0622 | 0.0422 | 0.0000 | 0.0000 | -0.1901 |
| 3 | 1 | Strength Check: | 0.0069 | -0.0888 | -0.0693 | 0.1026 | 0.0832 | 0.0000 | 0.0000 | 0.1026 |
| 3 | 1 | Strength Check: | -0.0574 | -0.1914 | -0.1634 | 0.0767 | 0.0487 | 0.0000 | 0.0000 | -0.1914 |
| 3 | 2 | Set Precast In | 0.0000 | 0.0000 | 0.0000 | 0.0000 | 0.0000 | 0.0000 | 0.0000 | 0.0000 |
| 3 | 2 | Set Precast In | 0.0000 | 0.0047 | -0.0047 | -0.0047 | 0.0047 | 0.0000 | 0.0000 | 0.0047 |
| 3 | 2 | Tension PT: | 0.0000 | 0.0040 | -0.0040 | -0.0040 | 0.0040 | 0.0000 | 0.0000 | 0.0040 |
| 3 | 2 | Tension PT: | 0.0000 | 0.0040 | -0.0040 | -0.0040 | 0.0040 | 0.0000 | 0.0000 | 0.0040 |
| 3 | 2 | Tension PT: | 0.0000 | 0.0040 | -0.0040 | -0.0040 | 0.0040 | 0.0000 | 0.0000 | 0.0040 |
| 3 | 2 | Tension PT: | 0.0000 | 0.0040 | -0.0040 | -0.0040 | 0.0040 | 0.0000 | 0.0000 | 0.0040 |
| 3 | 2 | Tension PT: | -0.0729 | -0.0521 | -0.0601 | -0.0937 | -0.0858 | 0.0000 | 0.0000 | -0.0937 |
| 3 | 2 | Add | -0.0729 | -0.0522 | -0.0601 | -0.0937 | -0.0858 | 0.0000 | 0.0000 | -0.0937 |
| 3 | 2 | Add | -0.0729 | -0.0522 | -0.0601 | -0.0937 | -0.0858 | 0.0000 | 0.0000 | -0.0937 |
| 3 | 2 | Add | -0.0729 | -0.0522 | -0.0601 | -0.0937 | -0.0858 | 0.0000 | 0.0000 | -0.0937 |
| 3 | 2 | Add | -0.0729 | -0.0522 | -0.0600 | -0.0936 | -0.0857 | 0.0000 | 0.0000 | -0.0936 |

## RESULT : Member Stresses

| Member | Station | Result Case | (P/A) @ Centroid (kips/in²) | Normal Stress @ Point 1 (kips/in²) | Normal Stress @ Point 2 (kips/in²) | Normal Stress @ Point 3 (kips/in²) | Normal Stress @ Point 4 (kips/in²) | Normal Stress @ Point 5 | Normal Stress @ Point 6 | Max ABS Total Stress (kips/in²) |
|---|---|---|---|---|---|---|---|---|---|---|
| 3 | 2 | Add | -0.0728 | -0.0443 | -0.0678 | -0.1013 | -0.0779 | 0.0000 | 0.0000 | -0.1013 |
| 3 | 2 | Backfill to Grade: | -0.0728 | -0.0460 | -0.0661 | -0.0996 | -0.0795 | 0.0000 | 0.0000 | -0.0996 |
| 3 | 2 | Backfill to Grade: | -0.0728 | -0.0460 | -0.0661 | -0.0996 | -0.0795 | 0.0000 | 0.0000 | -0.0996 |
| 3 | 2 | Backfill to Grade: | -0.0728 | -0.0460 | -0.0661 | -0.0996 | -0.0795 | 0.0000 | 0.0000 | -0.0996 |
| 3 | 2 | Backfill to Grade: | -0.0728 | -0.0460 | -0.0661 | -0.0996 | -0.0795 | 0.0000 | 0.0000 | -0.0996 |
| 3 | 2 | Backfill to Grade: | -0.0659 | 0.0109 | -0.0091 | -0.1426 | -0.1227 | 0.0000 | 0.0000 | -0.1426 |
| 3 | 2 | Backfill to Grade: | -0.0640 | 0.0288 | 0.0086 | -0.1568 | -0.1366 | 0.0000 | 0.0000 | -0.1568 |
| 3 | 2 | Pave: Pave: | -0.0659 | -0.0012 | -0.0210 | -0.1306 | -0.1107 | 0.0000 | 0.0000 | -0.1306 |
| 3 | 2 | Pave: Pave: | -0.0659 | -0.0012 | -0.0210 | -0.1306 | -0.1107 | 0.0000 | 0.0000 | -0.1306 |
| 3 | 2 | Pave: Pave: PT | -0.0659 | -0.0012 | -0.0210 | -0.1306 | -0.1107 | 0.0000 | 0.0000 | -0.1306 |
| 3 | 2 | Pave: Pave: | -0.0659 | -0.0012 | -0.0211 | -0.1306 | -0.1108 | 0.0000 | 0.0000 | -0.1306 |
| 3 | 2 | Pave: Pave: step | -0.0659 | 0.0000 | -0.0222 | -0.1318 | -0.1096 | 0.0000 | 0.0000 | -0.1318 |
| 3 | 2 | Open Bridge to | -0.0659 | -0.0023 | -0.0241 | -0.1295 | -0.1077 | 0.0000 | 0.0000 | -0.1295 |
| 3 | 2 | Open Bridge to | -0.0659 | -0.0023 | -0.0241 | -0.1295 | -0.1077 | 0.0000 | 0.0000 | -0.1295 |
| 3 | 2 | Open Bridge to | -0.0659 | -0.0023 | -0.0241 | -0.1295 | -0.1077 | 0.0000 | 0.0000 | -0.1295 |
| 3 | 2 | Open Bridge to | -0.0659 | -0.0023 | -0.0241 | -0.1295 | -0.1077 | 0.0000 | 0.0000 | -0.1295 |
| 3 | 2 | Open Bridge to | -0.0635 | 0.0255 | -0.0073 | -0.1525 | -0.1197 | 0.0000 | 0.0000 | -0.1525 |
| 3 | 2 | Open Bridge to | -0.0640 | 0.0199 | -0.0107 | -0.1479 | -0.1173 | 0.0000 | 0.0000 | -0.1479 |
| 3 | 2 | Partial Live Load | -0.0659 | -0.0038 | -0.0255 | -0.1280 | -0.1063 | 0.0000 | 0.0000 | -0.1280 |
| 3 | 2 | Partial Live Load | -0.0659 | -0.0038 | -0.0255 | -0.1280 | -0.1063 | 0.0000 | 0.0000 | -0.1280 |
| 3 | 2 | Partial Live Load | -0.0659 | -0.0038 | -0.0255 | -0.1280 | -0.1063 | 0.0000 | 0.0000 | -0.1280 |
| 3 | 2 | Partial Live Load | -0.0659 | -0.0038 | -0.0255 | -0.1280 | -0.1063 | 0.0000 | 0.0000 | -0.1280 |
| 3 | 2 | Partial Live Load | -0.0657 | -0.0010 | -0.0238 | -0.1303 | -0.1075 | 0.0000 | 0.0000 | -0.1303 |
| 3 | 2 | Remove Long | -0.0657 | -0.0817 | -0.0894 | -0.0496 | -0.0419 | 0.0000 | 0.0000 | -0.0894 |
| 3 | 2 | Remove Long | -0.0657 | -0.0817 | -0.0894 | -0.0496 | -0.0419 | 0.0000 | 0.0000 | -0.0894 |
| 3 | 2 | Remove Long | -0.0657 | -0.0817 | -0.0894 | -0.0496 | -0.0419 | 0.0000 | 0.0000 | -0.0894 |
| 3 | 2 | Remove Long | -0.0626 | -0.0793 | -0.0871 | -0.0459 | -0.0382 | 0.0000 | 0.0000 | -0.0871 |
| 3 | 2 | Remove Long | -0.0628 | -0.0821 | -0.0887 | -0.0436 | -0.0370 | 0.0000 | 0.0000 | -0.0887 |
| 3 | 2 | Long Term | -0.0628 | -0.0807 | -0.0876 | -0.0450 | -0.0381 | 0.0000 | 0.0000 | -0.0876 |
| 3 | 2 | Long Term | -0.0628 | -0.0807 | -0.0876 | -0.0450 | -0.0381 | 0.0000 | 0.0000 | -0.0876 |
| 3 | 2 | Long Term | -0.0628 | -0.0807 | -0.0876 | -0.0450 | -0.0381 | 0.0000 | 0.0000 | -0.0876 |
| 3 | 2 | Long Term | -0.0627 | -0.0806 | -0.0875 | -0.0448 | -0.0378 | 0.0000 | 0.0000 | -0.0875 |
| 3 | 2 | Long Term | -0.0608 | -0.0583 | -0.0741 | -0.0632 | -0.0475 | 0.0000 | 0.0000 | -0.0741 |
| 3 | 2 | Long Term | -0.0603 | -0.0527 | -0.0707 | -0.0678 | -0.0499 | 0.0000 | 0.0000 | -0.0707 |

## RESULT : Member Stresses

| Member | Station | Result Case | (P/A) @ Centroid (kips/in²) | Normal Stress @ Point 1 (kips/in²) | Normal Stress @ Point 2 (kips/in²) | Normal Stress @ Point 3 (kips/in²) | Normal Stress @ Point 4 (kips/in²) | Normal Stress @ Point 5 | Normal Stress @ Point 6 | Max ABS Total Stress (kips/in²) |
|---|---|---|---|---|---|---|---|---|---|---|
| 3 | 2 | Long Term | -0.0560 | -0.0477 | -0.0813 | -0.0643 | -0.0308 | 0.0000 | 0.0000 | -0.0813 |
| 3 | 2 | Strength Check: | -0.0627 | -0.0806 | -0.0875 | -0.0448 | -0.0378 | 0.0000 | 0.0000 | -0.0875 |
| 3 | 2 | Strength Check: | -0.0627 | -0.0806 | -0.0875 | -0.0448 | -0.0378 | 0.0000 | 0.0000 | -0.0875 |
| 3 | 2 | Strength Check: | -0.0627 | -0.0806 | -0.0875 | -0.0448 | -0.0378 | 0.0000 | 0.0000 | -0.0875 |
| 3 | 2 | Strength Check: | -0.0627 | -0.0806 | -0.0875 | -0.0448 | -0.0378 | 0.0000 | 0.0000 | -0.0875 |
| 3 | 2 | Strength Check: | 0.0070 | -0.0270 | -0.0340 | 0.0409 | 0.0479 | 0.0000 | 0.0000 | 0.0479 |
| 3 | 2 | Strength Check: | -0.0560 | -0.0477 | -0.0813 | -0.0643 | -0.0308 | 0.0000 | 0.0000 | -0.0813 |
| 4 | 0 | Set Precast In | 0.0000 | 0.0000 | 0.0000 | 0.0000 | 0.0000 | 0.0000 | 0.0000 | 0.0000 |
| 4 | 0 | Set Precast In | 0.0000 | 0.0047 | -0.0047 | -0.0047 | 0.0047 | 0.0000 | 0.0000 | -0.0047 |
| 4 | 0 | Tension PT: | 0.0000 | 0.0040 | -0.0040 | -0.0040 | 0.0040 | 0.0000 | 0.0000 | -0.0040 |
| 4 | 0 | Tension PT: | 0.0000 | 0.0040 | -0.0040 | -0.0040 | 0.0040 | 0.0000 | 0.0000 | -0.0040 |
| 4 | 0 | Tension PT: | 0.0000 | 0.0040 | -0.0040 | -0.0040 | 0.0040 | 0.0000 | 0.0000 | -0.0040 |
| 4 | 0 | Tension PT: | 0.0000 | 0.0040 | -0.0040 | -0.0040 | 0.0040 | 0.0000 | 0.0000 | -0.0040 |
| 4 | 0 | Tension PT: | -0.0730 | -0.0522 | -0.0601 | -0.0938 | -0.0858 | 0.0000 | 0.0000 | -0.0938 |
| 4 | 0 | Add | -0.0730 | -0.0522 | -0.0601 | -0.0937 | -0.0858 | 0.0000 | 0.0000 | -0.0937 |
| 4 | 0 | Add | -0.0730 | -0.0522 | -0.0601 | -0.0937 | -0.0858 | 0.0000 | 0.0000 | -0.0937 |
| 4 | 0 | Add | -0.0730 | -0.0522 | -0.0601 | -0.0937 | -0.0858 | 0.0000 | 0.0000 | -0.0937 |
| 4 | 0 | Add | -0.0729 | -0.0522 | -0.0601 | -0.0937 | -0.0858 | 0.0000 | 0.0000 | -0.0937 |
| 4 | 0 | Add | -0.0730 | -0.0445 | -0.0679 | -0.1015 | -0.0781 | 0.0000 | 0.0000 | -0.1015 |
| 4 | 0 | Backfill to Grade: | -0.0730 | -0.0462 | -0.0663 | -0.0998 | -0.0797 | 0.0000 | 0.0000 | -0.0998 |
| 4 | 0 | Backfill to Grade: | -0.0730 | -0.0462 | -0.0663 | -0.0998 | -0.0797 | 0.0000 | 0.0000 | -0.0998 |
| 4 | 0 | Backfill to Grade: | -0.0730 | -0.0462 | -0.0663 | -0.0998 | -0.0797 | 0.0000 | 0.0000 | -0.0998 |
| 4 | 0 | Backfill to Grade: | -0.0729 | -0.0462 | -0.0662 | -0.0997 | -0.0796 | 0.0000 | 0.0000 | -0.0997 |
| 4 | 0 | Backfill to Grade: | -0.0661 | 0.0100 | -0.0099 | -0.1422 | -0.1222 | 0.0000 | 0.0000 | -0.1422 |
| 4 | 0 | Backfill to Grade: | -0.0642 | 0.0280 | 0.0078 | -0.1563 | -0.1361 | 0.0000 | 0.0000 | -0.1563 |
| 4 | 0 | Pave: Pave: | -0.0661 | -0.0020 | -0.0219 | -0.1301 | -0.1102 | 0.0000 | 0.0000 | -0.1301 |
| 4 | 0 | Pave: Pave: | -0.0661 | -0.0020 | -0.0219 | -0.1301 | -0.1102 | 0.0000 | 0.0000 | -0.1301 |
| 4 | 0 | Pave: Pave: PT | -0.0661 | -0.0020 | -0.0219 | -0.1301 | -0.1102 | 0.0000 | 0.0000 | -0.1301 |
| 4 | 0 | Pave: Pave: | -0.0661 | -0.0020 | -0.0219 | -0.1301 | -0.1103 | 0.0000 | 0.0000 | -0.1301 |
| 4 | 0 | Pave: Pave: step | -0.0661 | -0.0009 | -0.0230 | -0.1313 | -0.1091 | 0.0000 | 0.0000 | -0.1313 |
| 4 | 0 | Open Bridge to | -0.0661 | -0.0032 | -0.0250 | -0.1290 | -0.1072 | 0.0000 | 0.0000 | -0.1290 |
| 4 | 0 | Open Bridge to | -0.0661 | -0.0032 | -0.0250 | -0.1290 | -0.1072 | 0.0000 | 0.0000 | -0.1290 |
| 4 | 0 | Open Bridge to | -0.0661 | -0.0032 | -0.0250 | -0.1290 | -0.1072 | 0.0000 | 0.0000 | -0.1290 |
| 4 | 0 | Open Bridge to | -0.0661 | -0.0032 | -0.0250 | -0.1290 | -0.1072 | 0.0000 | 0.0000 | -0.1290 |

## RESULT : Member Stresses

| Member | Station | Result Case | (P/A) @ Centroid (kips/in²) | Normal Stress @ Point 1 (kips/in²) | Normal Stress @ Point 2 (kips/in²) | Normal Stress @ Point 3 (kips/in²) | Normal Stress @ Point 4 (kips/in²) | Normal Stress @ Point 5 | Normal Stress @ Point 6 | Max ABS Total Stress (kips/in²) |
|---|---|---|---|---|---|---|---|---|---|---|
| 4 | 0 | Open Bridge to | -0.0638 | 0.0246 | -0.0082 | -0.1521 | -0.1193 | 0.0000 | 0.0000 | -0.1521 |
| 4 | 0 | Open Bridge to | -0.0642 | 0.0191 | -0.0116 | -0.1475 | -0.1169 | 0.0000 | 0.0000 | -0.1475 |
| 4 | 0 | Partial Live Load | -0.0661 | -0.0046 | -0.0263 | -0.1275 | -0.1058 | 0.0000 | 0.0000 | -0.1275 |
| 4 | 0 | Partial Live Load | -0.0661 | -0.0046 | -0.0263 | -0.1275 | -0.1058 | 0.0000 | 0.0000 | -0.1275 |
| 4 | 0 | Partial Live Load | -0.0661 | -0.0046 | -0.0263 | -0.1275 | -0.1058 | 0.0000 | 0.0000 | -0.1275 |
| 4 | 0 | Partial Live Load | -0.0661 | -0.0046 | -0.0263 | -0.1275 | -0.1058 | 0.0000 | 0.0000 | -0.1275 |
| 4 | 0 | Partial Live Load | -0.0658 | -0.0019 | -0.0246 | -0.1298 | -0.1070 | 0.0000 | 0.0000 | -0.1298 |
| 4 | 0 | Remove Long | -0.0658 | -0.0825 | -0.0902 | -0.0492 | -0.0414 | 0.0000 | 0.0000 | -0.0902 |
| 4 | 0 | Remove Long | -0.0658 | -0.0825 | -0.0902 | -0.0492 | -0.0414 | 0.0000 | 0.0000 | -0.0902 |
| 4 | 0 | Remove Long | -0.0658 | -0.0825 | -0.0902 | -0.0492 | -0.0414 | 0.0000 | 0.0000 | -0.0902 |
| 4 | 0 | Remove Long | -0.0628 | -0.0802 | -0.0879 | -0.0454 | -0.0377 | 0.0000 | 0.0000 | -0.0879 |
| 4 | 0 | Remove Long | -0.0630 | -0.0829 | -0.0896 | -0.0431 | -0.0365 | 0.0000 | 0.0000 | -0.0896 |
| 4 | 0 | Long Term | -0.0630 | -0.0815 | -0.0885 | -0.0445 | -0.0376 | 0.0000 | 0.0000 | -0.0885 |
| 4 | 0 | Long Term | -0.0630 | -0.0815 | -0.0885 | -0.0445 | -0.0376 | 0.0000 | 0.0000 | -0.0885 |
| 4 | 0 | Long Term | -0.0630 | -0.0815 | -0.0885 | -0.0445 | -0.0376 | 0.0000 | 0.0000 | -0.0885 |
| 4 | 0 | Long Term | -0.0628 | -0.0814 | -0.0883 | -0.0443 | -0.0374 | 0.0000 | 0.0000 | -0.0883 |
| 4 | 0 | Long Term | -0.0610 | -0.0592 | -0.0749 | -0.0628 | -0.0470 | 0.0000 | 0.0000 | -0.0749 |
| 4 | 0 | Long Term | -0.0605 | -0.0536 | -0.0716 | -0.0674 | -0.0495 | 0.0000 | 0.0000 | -0.0716 |
| 4 | 0 | Long Term | -0.0564 | -0.0487 | -0.0823 | -0.0641 | -0.0305 | 0.0000 | 0.0000 | -0.0823 |
| 4 | 0 | Strength Check: | -0.0628 | -0.0814 | -0.0883 | -0.0443 | -0.0374 | 0.0000 | 0.0000 | -0.0883 |
| 4 | 0 | Strength Check: | -0.0628 | -0.0814 | -0.0883 | -0.0443 | -0.0374 | 0.0000 | 0.0000 | -0.0883 |
| 4 | 0 | Strength Check: | -0.0628 | -0.0814 | -0.0883 | -0.0443 | -0.0374 | 0.0000 | 0.0000 | -0.0883 |
| 4 | 0 | Strength Check: | -0.0628 | -0.0814 | -0.0883 | -0.0443 | -0.0374 | 0.0000 | 0.0000 | -0.0883 |
| 4 | 0 | Strength Check: | 0.0068 | -0.0278 | -0.0348 | 0.0414 | 0.0484 | 0.0000 | 0.0000 | 0.0484 |
| 4 | 0 | Strength Check: | -0.0564 | -0.0487 | -0.0823 | -0.0641 | -0.0305 | 0.0000 | 0.0000 | -0.0823 |
| 4 | 1 | Set Precast In | 0.0000 | 0.0000 | 0.0000 | 0.0000 | 0.0000 | 0.0000 | 0.0000 | 0.0000 |
| 4 | 1 | Set Precast In | 0.0000 | 0.0019 | -0.0019 | -0.0019 | 0.0019 | 0.0000 | 0.0000 | -0.0019 |
| 4 | 1 | Tension PT: | 0.0000 | 0.0012 | -0.0012 | -0.0012 | 0.0012 | 0.0000 | 0.0000 | -0.0012 |
| 4 | 1 | Tension PT: | 0.0000 | 0.0012 | -0.0012 | -0.0012 | 0.0012 | 0.0000 | 0.0000 | -0.0012 |
| 4 | 1 | Tension PT: | 0.0000 | 0.0012 | -0.0012 | -0.0012 | 0.0012 | 0.0000 | 0.0000 | -0.0012 |
| 4 | 1 | Tension PT: | 0.0000 | 0.0012 | -0.0012 | -0.0012 | 0.0012 | 0.0000 | 0.0000 | -0.0012 |
| 4 | 1 | Tension PT: | -0.0727 | -0.0611 | -0.0635 | -0.0842 | -0.0818 | 0.0000 | 0.0000 | -0.0842 |
| 4 | 1 | Add | -0.0727 | -0.0612 | -0.0635 | -0.0841 | -0.0818 | 0.0000 | 0.0000 | -0.0841 |
| 4 | 1 | Add | -0.0727 | -0.0612 | -0.0635 | -0.0841 | -0.0818 | 0.0000 | 0.0000 | -0.0841 |

## RESULT : Member Stresses

| Member | Station | Result Case | (P/A) @ Centroid (kips/in²) | Normal Stress @ Point 1 (kips/in²) | Normal Stress @ Point 2 (kips/in²) | Normal Stress @ Point 3 (kips/in²) | Normal Stress @ Point 4 (kips/in²) | Normal Stress @ Point 5 | Normal Stress @ Point 6 | Max ABS Total Stress (kips/in²) |
|---|---|---|---|---|---|---|---|---|---|---|
| 4 | 1 | Add | -0.0727 | -0.0612 | -0.0635 | -0.0841 | -0.0818 | 0.0000 | 0.0000 | -0.0841 |
| 4 | 1 | Add | -0.0726 | -0.0611 | -0.0635 | -0.0841 | -0.0818 | 0.0000 | 0.0000 | -0.0841 |
| 4 | 1 | Add | -0.0727 | -0.0584 | -0.0663 | -0.0869 | -0.0790 | 0.0000 | 0.0000 | -0.0869 |
| 4 | 1 | Backfill to Grade: | -0.0727 | -0.0601 | -0.0646 | -0.0852 | -0.0807 | 0.0000 | 0.0000 | -0.0852 |
| 4 | 1 | Backfill to Grade: | -0.0727 | -0.0601 | -0.0646 | -0.0852 | -0.0807 | 0.0000 | 0.0000 | -0.0852 |
| 4 | 1 | Backfill to Grade: | -0.0727 | -0.0601 | -0.0646 | -0.0852 | -0.0807 | 0.0000 | 0.0000 | -0.0852 |
| 4 | 1 | Backfill to Grade: | -0.0726 | -0.0600 | -0.0646 | -0.0852 | -0.0806 | 0.0000 | 0.0000 | -0.0852 |
| 4 | 1 | Backfill to Grade: | -0.0657 | -0.0164 | -0.0209 | -0.1151 | -0.1106 | 0.0000 | 0.0000 | -0.1151 |
| 4 | 1 | Backfill to Grade: | -0.0639 | -0.0027 | -0.0074 | -0.1250 | -0.1203 | 0.0000 | 0.0000 | -0.1250 |
| 4 | 1 | Pave: Pave: | -0.0657 | -0.0261 | -0.0305 | -0.1053 | -0.1009 | 0.0000 | 0.0000 | -0.1053 |
| 4 | 1 | Pave: Pave: | -0.0657 | -0.0261 | -0.0305 | -0.1053 | -0.1009 | 0.0000 | 0.0000 | -0.1053 |
| 4 | 1 | Pave: Pave: PT | -0.0657 | -0.0261 | -0.0305 | -0.1053 | -0.1009 | 0.0000 | 0.0000 | -0.1053 |
| 4 | 1 | Pave: Pave: | -0.0658 | -0.0262 | -0.0305 | -0.1053 | -0.1010 | 0.0000 | 0.0000 | -0.1053 |
| 4 | 1 | Pave: Pave: step | -0.0658 | -0.0258 | -0.0310 | -0.1058 | -0.1006 | 0.0000 | 0.0000 | -0.1058 |
| 4 | 1 | Open Bridge to | -0.0658 | -0.0276 | -0.0325 | -0.1039 | -0.0990 | 0.0000 | 0.0000 | -0.1039 |
| 4 | 1 | Open Bridge to | -0.0658 | -0.0276 | -0.0325 | -0.1039 | -0.0990 | 0.0000 | 0.0000 | -0.1039 |
| 4 | 1 | Open Bridge to | -0.0658 | -0.0276 | -0.0325 | -0.1039 | -0.0990 | 0.0000 | 0.0000 | -0.1039 |
| 4 | 1 | Open Bridge to | -0.0658 | -0.0276 | -0.0325 | -0.1039 | -0.0990 | 0.0000 | 0.0000 | -0.1039 |
| 4 | 1 | Open Bridge to | -0.0634 | -0.0086 | -0.0176 | -0.1182 | -0.1092 | 0.0000 | 0.0000 | -0.1182 |
| 4 | 1 | Open Bridge to | -0.0639 | -0.0124 | -0.0206 | -0.1153 | -0.1072 | 0.0000 | 0.0000 | -0.1153 |
| 4 | 1 | Partial Live Load | -0.0658 | -0.0288 | -0.0336 | -0.1027 | -0.0980 | 0.0000 | 0.0000 | -0.1027 |
| 4 | 1 | Partial Live Load | -0.0658 | -0.0288 | -0.0336 | -0.1027 | -0.0980 | 0.0000 | 0.0000 | -0.1027 |
| 4 | 1 | Partial Live Load | -0.0658 | -0.0288 | -0.0336 | -0.1027 | -0.0980 | 0.0000 | 0.0000 | -0.1027 |
| 4 | 1 | Partial Live Load | -0.0658 | -0.0288 | -0.0336 | -0.1027 | -0.0980 | 0.0000 | 0.0000 | -0.1027 |
| 4 | 1 | Partial Live Load | -0.0655 | -0.0269 | -0.0321 | -0.1041 | -0.0990 | 0.0000 | 0.0000 | -0.1041 |
| 4 | 1 | Remove Long | -0.0655 | -0.0935 | -0.0837 | -0.0376 | -0.0473 | 0.0000 | 0.0000 | -0.0935 |
| 4 | 1 | Remove Long | -0.0655 | -0.0935 | -0.0837 | -0.0375 | -0.0473 | 0.0000 | 0.0000 | -0.0935 |
| 4 | 1 | Remove Long | -0.0655 | -0.0935 | -0.0837 | -0.0375 | -0.0473 | 0.0000 | 0.0000 | -0.0935 |
| 4 | 1 | Remove Long | -0.0625 | -0.0909 | -0.0811 | -0.0341 | -0.0438 | 0.0000 | 0.0000 | -0.0909 |
| 4 | 1 | Remove Long | -0.0627 | -0.0928 | -0.0826 | -0.0326 | -0.0428 | 0.0000 | 0.0000 | -0.0928 |
| 4 | 1 | Long Term | -0.0627 | -0.0916 | -0.0818 | -0.0338 | -0.0436 | 0.0000 | 0.0000 | -0.0916 |
| 4 | 1 | Long Term | -0.0627 | -0.0916 | -0.0818 | -0.0338 | -0.0436 | 0.0000 | 0.0000 | -0.0916 |
| 4 | 1 | Long Term | -0.0627 | -0.0916 | -0.0818 | -0.0338 | -0.0436 | 0.0000 | 0.0000 | -0.0916 |
| 4 | 1 | Long Term | -0.0625 | -0.0915 | -0.0816 | -0.0336 | -0.0435 | 0.0000 | 0.0000 | -0.0915 |

## RESULT : Member Stresses

| Member | Station | Result Case | (P/A) @ Centroid (kips/in²) | Normal Stress @ Point 1 (kips/in²) | Normal Stress @ Point 2 (kips/in²) | Normal Stress @ Point 3 (kips/in²) | Normal Stress @ Point 4 (kips/in²) | Normal Stress @ Point 5 | Normal Stress @ Point 6 | Max ABS Total Stress (kips/in²) |
|---|---|---|---|---|---|---|---|---|---|---|
| 4 | 1 | Long Term | -0.0607 | -0.0763 | -0.0697 | -0.0451 | -0.0516 | 0.0000 | 0.0000 | -0.0763 |
| 4 | 1 | Long Term | -0.0602 | -0.0725 | -0.0668 | -0.0479 | -0.0536 | 0.0000 | 0.0000 | -0.0725 |
| 4 | 1 | Long Term | -0.0561 | -0.0698 | -0.0699 | -0.0423 | -0.0422 | 0.0000 | 0.0000 | -0.0699 |
| 4 | 1 | Strength Check: | -0.0625 | -0.0915 | -0.0816 | -0.0336 | -0.0435 | 0.0000 | 0.0000 | -0.0915 |
| 4 | 1 | Strength Check: | -0.0625 | -0.0915 | -0.0816 | -0.0336 | -0.0435 | 0.0000 | 0.0000 | -0.0915 |
| 4 | 1 | Strength Check: | -0.0625 | -0.0915 | -0.0816 | -0.0336 | -0.0435 | 0.0000 | 0.0000 | -0.0915 |
| 4 | 1 | Strength Check: | -0.0625 | -0.0915 | -0.0816 | -0.0336 | -0.0435 | 0.0000 | 0.0000 | -0.0915 |
| 4 | 1 | Strength Check: | 0.0068 | -0.0320 | -0.0222 | 0.0456 | 0.0358 | 0.0000 | 0.0000 | 0.0456 |
| 4 | 1 | Strength Check: | -0.0561 | -0.0698 | -0.0699 | -0.0423 | -0.0422 | 0.0000 | 0.0000 | -0.0699 |
| 4 | 2 | Set Precast In | 0.0000 | 0.0000 | 0.0000 | 0.0000 | 0.0000 | 0.0000 | 0.0000 | 0.0000 |
| 4 | 2 | Set Precast In | 0.0000 | -0.0002 | 0.0001 | 0.0001 | -0.0002 | 0.0000 | 0.0000 | -0.0002 |
| 4 | 2 | Tension PT: | 0.0000 | -0.0009 | 0.0008 | 0.0008 | -0.0009 | 0.0000 | 0.0000 | -0.0009 |
| 4 | 2 | Tension PT: | 0.0000 | -0.0009 | 0.0008 | 0.0008 | -0.0009 | 0.0000 | 0.0000 | -0.0009 |
| 4 | 2 | Tension PT: | 0.0000 | -0.0009 | 0.0008 | 0.0008 | -0.0009 | 0.0000 | 0.0000 | -0.0009 |
| 4 | 2 | Tension PT: | 0.0000 | -0.0009 | 0.0008 | 0.0008 | -0.0009 | 0.0000 | 0.0000 | -0.0009 |
| 4 | 2 | Tension PT: | -0.0724 | -0.0692 | -0.0676 | -0.0755 | -0.0772 | 0.0000 | 0.0000 | -0.0772 |
| 4 | 2 | Add | -0.0724 | -0.0693 | -0.0675 | -0.0755 | -0.0772 | 0.0000 | 0.0000 | -0.0772 |
| 4 | 2 | Add | -0.0724 | -0.0693 | -0.0675 | -0.0755 | -0.0772 | 0.0000 | 0.0000 | -0.0772 |
| 4 | 2 | Add | -0.0724 | -0.0693 | -0.0675 | -0.0755 | -0.0772 | 0.0000 | 0.0000 | -0.0772 |
| 4 | 2 | Add | -0.0723 | -0.0692 | -0.0675 | -0.0754 | -0.0772 | 0.0000 | 0.0000 | -0.0772 |
| 4 | 2 | Add | -0.0724 | -0.0701 | -0.0667 | -0.0747 | -0.0780 | 0.0000 | 0.0000 | -0.0780 |
| 4 | 2 | Backfill to Grade: | -0.0724 | -0.0717 | -0.0651 | -0.0730 | -0.0797 | 0.0000 | 0.0000 | -0.0797 |
| 4 | 2 | Backfill to Grade: | -0.0724 | -0.0717 | -0.0651 | -0.0730 | -0.0797 | 0.0000 | 0.0000 | -0.0797 |
| 4 | 2 | Backfill to Grade: | -0.0724 | -0.0717 | -0.0651 | -0.0730 | -0.0797 | 0.0000 | 0.0000 | -0.0797 |
| 4 | 2 | Backfill to Grade: | -0.0723 | -0.0717 | -0.0650 | -0.0730 | -0.0796 | 0.0000 | 0.0000 | -0.0796 |
| 4 | 2 | Backfill to Grade: | -0.0655 | -0.0275 | -0.0208 | -0.1034 | -0.1101 | 0.0000 | 0.0000 | -0.1101 |
| 4 | 2 | Backfill to Grade: | -0.0636 | -0.0141 | -0.0076 | -0.1131 | -0.1196 | 0.0000 | 0.0000 | -0.1196 |
| 4 | 2 | Pave: Pave: | -0.0655 | -0.0350 | -0.0282 | -0.0959 | -0.1027 | 0.0000 | 0.0000 | -0.1027 |
| 4 | 2 | Pave: Pave: | -0.0655 | -0.0350 | -0.0282 | -0.0959 | -0.1027 | 0.0000 | 0.0000 | -0.1027 |
| 4 | 2 | Pave: Pave: PT | -0.0655 | -0.0350 | -0.0282 | -0.0959 | -0.1027 | 0.0000 | 0.0000 | -0.1027 |
| 4 | 2 | Pave: Pave: | -0.0655 | -0.0350 | -0.0282 | -0.0959 | -0.1027 | 0.0000 | 0.0000 | -0.1027 |
| 4 | 2 | Pave: Pave: step | -0.0655 | -0.0352 | -0.0281 | -0.0958 | -0.1028 | 0.0000 | 0.0000 | -0.1028 |
| 4 | 2 | Open Bridge to | -0.0655 | -0.0366 | -0.0292 | -0.0943 | -0.1017 | 0.0000 | 0.0000 | -0.1017 |
| 4 | 2 | Open Bridge to | -0.0655 | -0.0366 | -0.0292 | -0.0943 | -0.1017 | 0.0000 | 0.0000 | -0.1017 |

## RESULT : Member Stresses

| Member | Station | Result Case | (P/A) @ Centroid (kips/in²) | Normal Stress @ Point 1 (kips/in²) | Normal Stress @ Point 2 (kips/in²) | Normal Stress @ Point 3 (kips/in²) | Normal Stress @ Point 4 (kips/in²) | Normal Stress @ Point 5 | Normal Stress @ Point 6 | Max ABS Total Stress (kips/in²) |
|---|---|---|---|---|---|---|---|---|---|---|
| 4 | 2 | Open Bridge to | -0.0655 | -0.0366 | -0.0292 | -0.0943 | -0.1017 | 0.0000 | 0.0000 | -0.1017 |
| 4 | 2 | Open Bridge to | -0.0655 | -0.0366 | -0.0292 | -0.0943 | -0.1017 | 0.0000 | 0.0000 | -0.1017 |
| 4 | 2 | Open Bridge to | -0.0631 | -0.0204 | -0.0122 | -0.1059 | -0.1141 | 0.0000 | 0.0000 | -0.1141 |
| 4 | 2 | Open Bridge to | -0.0636 | -0.0237 | -0.0156 | -0.1036 | -0.1116 | 0.0000 | 0.0000 | -0.1116 |
| 4 | 2 | Partial Live Load | -0.0655 | -0.0376 | -0.0300 | -0.0934 | -0.1009 | 0.0000 | 0.0000 | -0.1009 |
| 4 | 2 | Partial Live Load | -0.0655 | -0.0376 | -0.0300 | -0.0934 | -0.1009 | 0.0000 | 0.0000 | -0.1009 |
| 4 | 2 | Partial Live Load | -0.0655 | -0.0376 | -0.0300 | -0.0934 | -0.1009 | 0.0000 | 0.0000 | -0.1009 |
| 4 | 2 | Partial Live Load | -0.0655 | -0.0376 | -0.0300 | -0.0934 | -0.1009 | 0.0000 | 0.0000 | -0.1009 |
| 4 | 2 | Partial Live Load | -0.0652 | -0.0359 | -0.0283 | -0.0945 | -0.1021 | 0.0000 | 0.0000 | -0.1021 |
| 4 | 2 | Remove Long | -0.0652 | -0.0884 | -0.0661 | -0.0420 | -0.0644 | 0.0000 | 0.0000 | -0.0884 |
| 4 | 2 | Remove Long | -0.0652 | -0.0884 | -0.0661 | -0.0420 | -0.0644 | 0.0000 | 0.0000 | -0.0884 |
| 4 | 2 | Remove Long | -0.0652 | -0.0884 | -0.0661 | -0.0420 | -0.0644 | 0.0000 | 0.0000 | -0.0884 |
| 4 | 2 | Remove Long | -0.0622 | -0.0856 | -0.0632 | -0.0388 | -0.0611 | 0.0000 | 0.0000 | -0.0856 |
| 4 | 2 | Remove Long | -0.0624 | -0.0872 | -0.0649 | -0.0377 | -0.0599 | 0.0000 | 0.0000 | -0.0872 |
| 4 | 2 | Long Term | -0.0624 | -0.0863 | -0.0643 | -0.0386 | -0.0605 | 0.0000 | 0.0000 | -0.0863 |
| 4 | 2 | Long Term | -0.0624 | -0.0863 | -0.0643 | -0.0386 | -0.0605 | 0.0000 | 0.0000 | -0.0863 |
| 4 | 2 | Long Term | -0.0624 | -0.0863 | -0.0643 | -0.0386 | -0.0605 | 0.0000 | 0.0000 | -0.0863 |
| 4 | 2 | Long Term | -0.0623 | -0.0861 | -0.0642 | -0.0384 | -0.0603 | 0.0000 | 0.0000 | -0.0861 |
| 4 | 2 | Long Term | -0.0604 | -0.0732 | -0.0505 | -0.0476 | -0.0702 | 0.0000 | 0.0000 | -0.0732 |
| 4 | 2 | Long Term | -0.0599 | -0.0699 | -0.0471 | -0.0499 | -0.0727 | 0.0000 | 0.0000 | -0.0727 |
| 4 | 2 | Long Term | -0.0558 | -0.0681 | -0.0441 | -0.0434 | -0.0675 | 0.0000 | 0.0000 | -0.0681 |
| 4 | 2 | Strength Check: | -0.0623 | -0.0861 | -0.0642 | -0.0384 | -0.0603 | 0.0000 | 0.0000 | -0.0861 |
| 4 | 2 | Strength Check: | -0.0623 | -0.0861 | -0.0642 | -0.0384 | -0.0603 | 0.0000 | 0.0000 | -0.0861 |
| 4 | 2 | Strength Check: | -0.0623 | -0.0861 | -0.0642 | -0.0384 | -0.0603 | 0.0000 | 0.0000 | -0.0861 |
| 4 | 2 | Strength Check: | -0.0623 | -0.0861 | -0.0642 | -0.0384 | -0.0603 | 0.0000 | 0.0000 | -0.0861 |
| 4 | 2 | Strength Check: | 0.0068 | -0.0208 | 0.0011 | 0.0345 | 0.0125 | 0.0000 | 0.0000 | 0.0345 |
| 4 | 2 | Strength Check: | -0.0558 | -0.0681 | -0.0441 | -0.0434 | -0.0675 | 0.0000 | 0.0000 | -0.0681 |
| 5 | 0 | Set Precast In | 0.0000 | 0.0000 | 0.0000 | 0.0000 | 0.0000 | 0.0000 | 0.0000 | 0.0000 |
| 5 | 0 | Set Precast In | 0.0000 | -0.0002 | 0.0001 | 0.0001 | -0.0002 | 0.0000 | 0.0000 | -0.0002 |
| 5 | 0 | Tension PT: | 0.0000 | -0.0009 | 0.0008 | 0.0008 | -0.0009 | 0.0000 | 0.0000 | -0.0009 |
| 5 | 0 | Tension PT: | 0.0000 | -0.0009 | 0.0008 | 0.0008 | -0.0009 | 0.0000 | 0.0000 | -0.0009 |
| 5 | 0 | Tension PT: | 0.0000 | -0.0009 | 0.0008 | 0.0008 | -0.0009 | 0.0000 | 0.0000 | -0.0009 |
| 5 | 0 | Tension PT: | 0.0000 | -0.0009 | 0.0008 | 0.0008 | -0.0009 | 0.0000 | 0.0000 | -0.0009 |
| 5 | 0 | Tension PT: | -0.0724 | -0.0692 | -0.0676 | -0.0755 | -0.0772 | 0.0000 | 0.0000 | -0.0772 |

## RESULT : Member Stresses

| Member | Station | Result Case | (P/A) @ Centroid (kips/in²) | Normal Stress @ Point 1 (kips/in²) | Normal Stress @ Point 2 (kips/in²) | Normal Stress @ Point 3 (kips/in²) | Normal Stress @ Point 4 (kips/in²) | Normal Stress @ Point 5 | Normal Stress @ Point 6 | Max ABS Total Stress (kips/in²) |
|---|---|---|---|---|---|---|---|---|---|---|
| 5 | 0 | Add | -0.0724 | -0.0693 | -0.0675 | -0.0755 | -0.0772 | 0.0000 | 0.0000 | -0.0772 |
| 5 | 0 | Add | -0.0724 | -0.0693 | -0.0675 | -0.0755 | -0.0772 | 0.0000 | 0.0000 | -0.0772 |
| 5 | 0 | Add | -0.0724 | -0.0693 | -0.0675 | -0.0755 | -0.0772 | 0.0000 | 0.0000 | -0.0772 |
| 5 | 0 | Add | -0.0723 | -0.0692 | -0.0675 | -0.0754 | -0.0772 | 0.0000 | 0.0000 | -0.0772 |
| 5 | 0 | Add | -0.0724 | -0.0701 | -0.0667 | -0.0747 | -0.0780 | 0.0000 | 0.0000 | -0.0780 |
| 5 | 0 | Backfill to Grade: | -0.0724 | -0.0717 | -0.0651 | -0.0730 | -0.0797 | 0.0000 | 0.0000 | -0.0797 |
| 5 | 0 | Backfill to Grade: | -0.0724 | -0.0717 | -0.0651 | -0.0730 | -0.0797 | 0.0000 | 0.0000 | -0.0797 |
| 5 | 0 | Backfill to Grade: | -0.0724 | -0.0717 | -0.0651 | -0.0730 | -0.0797 | 0.0000 | 0.0000 | -0.0797 |
| 5 | 0 | Backfill to Grade: | -0.0723 | -0.0717 | -0.0650 | -0.0730 | -0.0796 | 0.0000 | 0.0000 | -0.0796 |
| 5 | 0 | Backfill to Grade: | -0.0655 | -0.0275 | -0.0208 | -0.1034 | -0.1101 | 0.0000 | 0.0000 | -0.1101 |
| 5 | 0 | Backfill to Grade: | -0.0636 | -0.0141 | -0.0076 | -0.1131 | -0.1195 | 0.0000 | 0.0000 | -0.1195 |
| 5 | 0 | Pave: Pave: | -0.0655 | -0.0350 | -0.0282 | -0.0959 | -0.1027 | 0.0000 | 0.0000 | -0.1027 |
| 5 | 0 | Pave: Pave: | -0.0655 | -0.0350 | -0.0282 | -0.0959 | -0.1027 | 0.0000 | 0.0000 | -0.1027 |
| 5 | 0 | Pave: Pave: PT | -0.0655 | -0.0350 | -0.0282 | -0.0959 | -0.1027 | 0.0000 | 0.0000 | -0.1027 |
| 5 | 0 | Pave: Pave: | -0.0655 | -0.0351 | -0.0283 | -0.0959 | -0.1027 | 0.0000 | 0.0000 | -0.1027 |
| 5 | 0 | Pave: Pave: step | -0.0655 | -0.0352 | -0.0281 | -0.0958 | -0.1028 | 0.0000 | 0.0000 | -0.1028 |
| 5 | 0 | Open Bridge to | -0.0655 | -0.0367 | -0.0293 | -0.0943 | -0.1017 | 0.0000 | 0.0000 | -0.1017 |
| 5 | 0 | Open Bridge to | -0.0655 | -0.0367 | -0.0293 | -0.0943 | -0.1017 | 0.0000 | 0.0000 | -0.1017 |
| 5 | 0 | Open Bridge to | -0.0655 | -0.0367 | -0.0293 | -0.0943 | -0.1017 | 0.0000 | 0.0000 | -0.1017 |
| 5 | 0 | Open Bridge to | -0.0655 | -0.0367 | -0.0293 | -0.0943 | -0.1017 | 0.0000 | 0.0000 | -0.1017 |
| 5 | 0 | Open Bridge to | -0.0631 | -0.0204 | -0.0122 | -0.1058 | -0.1141 | 0.0000 | 0.0000 | -0.1141 |
| 5 | 0 | Open Bridge to | -0.0636 | -0.0237 | -0.0156 | -0.1035 | -0.1116 | 0.0000 | 0.0000 | -0.1116 |
| 5 | 0 | Partial Live Load | -0.0655 | -0.0376 | -0.0301 | -0.0934 | -0.1009 | 0.0000 | 0.0000 | -0.1009 |
| 5 | 0 | Partial Live Load | -0.0655 | -0.0376 | -0.0301 | -0.0934 | -0.1009 | 0.0000 | 0.0000 | -0.1009 |
| 5 | 0 | Partial Live Load | -0.0655 | -0.0376 | -0.0301 | -0.0934 | -0.1009 | 0.0000 | 0.0000 | -0.1009 |
| 5 | 0 | Partial Live Load | -0.0655 | -0.0376 | -0.0301 | -0.0934 | -0.1009 | 0.0000 | 0.0000 | -0.1009 |
| 5 | 0 | Partial Live Load | -0.0652 | -0.0360 | -0.0284 | -0.0945 | -0.1021 | 0.0000 | 0.0000 | -0.1021 |
| 5 | 0 | Remove Long | -0.0652 | -0.0885 | -0.0662 | -0.0420 | -0.0643 | 0.0000 | 0.0000 | -0.0885 |
| 5 | 0 | Remove Long | -0.0652 | -0.0885 | -0.0661 | -0.0420 | -0.0643 | 0.0000 | 0.0000 | -0.0885 |
| 5 | 0 | Remove Long | -0.0652 | -0.0885 | -0.0661 | -0.0420 | -0.0643 | 0.0000 | 0.0000 | -0.0885 |
| 5 | 0 | Remove Long | -0.0622 | -0.0856 | -0.0633 | -0.0388 | -0.0611 | 0.0000 | 0.0000 | -0.0856 |
| 5 | 0 | Remove Long | -0.0624 | -0.0872 | -0.0650 | -0.0376 | -0.0599 | 0.0000 | 0.0000 | -0.0872 |
| 5 | 0 | Long Term | -0.0624 | -0.0863 | -0.0644 | -0.0385 | -0.0605 | 0.0000 | 0.0000 | -0.0863 |
| 5 | 0 | Long Term | -0.0624 | -0.0863 | -0.0644 | -0.0385 | -0.0605 | 0.0000 | 0.0000 | -0.0863 |

## RESULT : Member Stresses

| Member | Station | Result Case | (P/A) @ Centroid (kips/in²) | Normal Stress @ Point 1 (kips/in²) | Normal Stress @ Point 2 (kips/in²) | Normal Stress @ Point 3 (kips/in²) | Normal Stress @ Point 4 (kips/in²) | Normal Stress @ Point 5 | Normal Stress @ Point 6 | Max ABS Total Stress (kips/in²) |
|---|---|---|---|---|---|---|---|---|---|---|
| 5 | 0 | Long Term | -0.0624 | -0.0863 | -0.0644 | -0.0385 | -0.0605 | 0.0000 | 0.0000 | -0.0863 |
| 5 | 0 | Long Term | -0.0623 | -0.0862 | -0.0642 | -0.0383 | -0.0603 | 0.0000 | 0.0000 | -0.0862 |
| 5 | 0 | Long Term | -0.0604 | -0.0732 | -0.0506 | -0.0476 | -0.0702 | 0.0000 | 0.0000 | -0.0732 |
| 5 | 0 | Long Term | -0.0599 | -0.0700 | -0.0472 | -0.0499 | -0.0727 | 0.0000 | 0.0000 | -0.0727 |
| 5 | 0 | Long Term | -0.0558 | -0.0682 | -0.0441 | -0.0434 | -0.0674 | 0.0000 | 0.0000 | -0.0682 |
| 5 | 0 | Strength Check: | -0.0623 | -0.0862 | -0.0642 | -0.0383 | -0.0603 | 0.0000 | 0.0000 | -0.0862 |
| 5 | 0 | Strength Check: | -0.0623 | -0.0862 | -0.0642 | -0.0383 | -0.0603 | 0.0000 | 0.0000 | -0.0862 |
| 5 | 0 | Strength Check: | -0.0623 | -0.0862 | -0.0642 | -0.0383 | -0.0603 | 0.0000 | 0.0000 | -0.0862 |
| 5 | 0 | Strength Check: | -0.0623 | -0.0862 | -0.0642 | -0.0383 | -0.0603 | 0.0000 | 0.0000 | -0.0862 |
| 5 | 0 | Strength Check: | 0.0068 | -0.0209 | 0.0011 | 0.0345 | 0.0126 | 0.0000 | 0.0000 | 0.0345 |
| 5 | 0 | Strength Check: | -0.0558 | -0.0682 | -0.0441 | -0.0434 | -0.0674 | 0.0000 | 0.0000 | -0.0682 |
| 5 | 1 | Set Precast In | 0.0000 | 0.0000 | 0.0000 | 0.0000 | 0.0000 | 0.0000 | 0.0000 | 0.0000 |
| 5 | 1 | Set Precast In | 0.0000 | -0.0016 | 0.0016 | 0.0016 | -0.0016 | 0.0000 | 0.0000 | 0.0016 |
| 5 | 1 | Tension PT: | 0.0000 | -0.0022 | 0.0023 | 0.0023 | -0.0022 | 0.0000 | 0.0000 | 0.0023 |
| 5 | 1 | Tension PT: | 0.0000 | -0.0022 | 0.0023 | 0.0023 | -0.0022 | 0.0000 | 0.0000 | 0.0023 |
| 5 | 1 | Tension PT: | 0.0000 | -0.0022 | 0.0023 | 0.0023 | -0.0022 | 0.0000 | 0.0000 | 0.0023 |
| 5 | 1 | Tension PT: | 0.0000 | -0.0022 | 0.0023 | 0.0023 | -0.0022 | 0.0000 | 0.0000 | 0.0023 |
| 5 | 1 | Tension PT: | -0.0714 | -0.0721 | -0.0677 | -0.0707 | -0.0751 | 0.0000 | 0.0000 | -0.0751 |
| 5 | 1 | Add | -0.0714 | -0.0722 | -0.0677 | -0.0706 | -0.0751 | 0.0000 | 0.0000 | -0.0751 |
| 5 | 1 | Add | -0.0714 | -0.0722 | -0.0677 | -0.0706 | -0.0751 | 0.0000 | 0.0000 | -0.0751 |
| 5 | 1 | Add | -0.0714 | -0.0722 | -0.0677 | -0.0706 | -0.0751 | 0.0000 | 0.0000 | -0.0751 |
| 5 | 1 | Add | -0.0713 | -0.0721 | -0.0676 | -0.0706 | -0.0751 | 0.0000 | 0.0000 | -0.0751 |
| 5 | 1 | Add | -0.0713 | -0.0753 | -0.0644 | -0.0673 | -0.0783 | 0.0000 | 0.0000 | -0.0783 |
| 5 | 1 | Backfill to Grade: | -0.0713 | -0.0769 | -0.0628 | -0.0657 | -0.0799 | 0.0000 | 0.0000 | -0.0799 |
| 5 | 1 | Backfill to Grade: | -0.0713 | -0.0769 | -0.0628 | -0.0657 | -0.0799 | 0.0000 | 0.0000 | -0.0799 |
| 5 | 1 | Backfill to Grade: | -0.0713 | -0.0769 | -0.0628 | -0.0657 | -0.0799 | 0.0000 | 0.0000 | -0.0799 |
| 5 | 1 | Backfill to Grade: | -0.0713 | -0.0769 | -0.0627 | -0.0657 | -0.0798 | 0.0000 | 0.0000 | -0.0798 |
| 5 | 1 | Backfill to Grade: | -0.0645 | -0.0944 | -0.0803 | -0.0345 | -0.0486 | 0.0000 | 0.0000 | -0.0944 |
| 5 | 1 | Backfill to Grade: | -0.0626 | -0.1000 | -0.0860 | -0.0251 | -0.0391 | 0.0000 | 0.0000 | -0.1000 |
| 5 | 1 | Pave: Pave: | -0.0645 | -0.1022 | -0.0879 | -0.0267 | -0.0410 | 0.0000 | 0.0000 | -0.1022 |
| 5 | 1 | Pave: Pave: | -0.0645 | -0.1022 | -0.0879 | -0.0267 | -0.0410 | 0.0000 | 0.0000 | -0.1022 |
| 5 | 1 | Pave: Pave: PT | -0.0645 | -0.1022 | -0.0879 | -0.0267 | -0.0410 | 0.0000 | 0.0000 | -0.1022 |
| 5 | 1 | Pave: Pave: | -0.0645 | -0.1022 | -0.0880 | -0.0267 | -0.0410 | 0.0000 | 0.0000 | -0.1022 |
| 5 | 1 | Pave: Pave: step | -0.0645 | -0.1027 | -0.0875 | -0.0263 | -0.0415 | 0.0000 | 0.0000 | -0.1027 |

## RESULT : Member Stresses

| Member | Station | Result Case | (P/A) @ Centroid (kips/in²) | Normal Stress @ Point 1 (kips/in²) | Normal Stress @ Point 2 (kips/in²) | Normal Stress @ Point 3 (kips/in²) | Normal Stress @ Point 4 (kips/in²) | Normal Stress @ Point 5 | Normal Stress @ Point 6 | Max ABS Total Stress (kips/in²) |
|---|---|---|---|---|---|---|---|---|---|---|
| 5 | 1 | Open Bridge to | -0.0645 | -0.1042 | -0.0887 | -0.0248 | -0.0403 | 0.0000 | 0.0000 | -0.1042 |
| 5 | 1 | Open Bridge to | -0.0645 | -0.1042 | -0.0887 | -0.0248 | -0.0403 | 0.0000 | 0.0000 | -0.1042 |
| 5 | 1 | Open Bridge to | -0.0645 | -0.1042 | -0.0887 | -0.0248 | -0.0403 | 0.0000 | 0.0000 | -0.1042 |
| 5 | 1 | Open Bridge to | -0.0645 | -0.1042 | -0.0887 | -0.0248 | -0.0403 | 0.0000 | 0.0000 | -0.1042 |
| 5 | 1 | Open Bridge to | -0.0621 | -0.1134 | -0.0936 | -0.0108 | -0.0306 | 0.0000 | 0.0000 | -0.1134 |
| 5 | 1 | Open Bridge to | -0.0626 | -0.1116 | -0.0926 | -0.0136 | -0.0326 | 0.0000 | 0.0000 | -0.1116 |
| 5 | 1 | Partial Live Load | -0.0645 | -0.1051 | -0.0895 | -0.0238 | -0.0394 | 0.0000 | 0.0000 | -0.1051 |
| 5 | 1 | Partial Live Load | -0.0645 | -0.1051 | -0.0895 | -0.0238 | -0.0394 | 0.0000 | 0.0000 | -0.1051 |
| 5 | 1 | Partial Live Load | -0.0645 | -0.1051 | -0.0895 | -0.0238 | -0.0394 | 0.0000 | 0.0000 | -0.1051 |
| 5 | 1 | Partial Live Load | -0.0645 | -0.1051 | -0.0895 | -0.0238 | -0.0394 | 0.0000 | 0.0000 | -0.1051 |
| 5 | 1 | Partial Live Load | -0.0642 | -0.1061 | -0.0900 | -0.0224 | -0.0385 | 0.0000 | 0.0000 | -0.1061 |
| 5 | 1 | Remove Long | -0.0642 | -0.1597 | -0.1294 | 0.0312 | 0.0009 | 0.0000 | 0.0000 | -0.1597 |
| 5 | 1 | Remove Long | -0.0642 | -0.1597 | -0.1294 | 0.0312 | 0.0009 | 0.0000 | 0.0000 | -0.1597 |
| 5 | 1 | Remove Long | -0.0642 | -0.1597 | -0.1294 | 0.0312 | 0.0009 | 0.0000 | 0.0000 | -0.1597 |
| 5 | 1 | Remove Long | -0.0612 | -0.1567 | -0.1264 | 0.0343 | 0.0040 | 0.0000 | 0.0000 | -0.1567 |
| 5 | 1 | Remove Long | -0.0614 | -0.1558 | -0.1259 | 0.0329 | 0.0031 | 0.0000 | 0.0000 | -0.1558 |
| 5 | 1 | Long Term | -0.0614 | -0.1549 | -0.1253 | 0.0320 | 0.0024 | 0.0000 | 0.0000 | -0.1549 |
| 5 | 1 | Long Term | -0.0614 | -0.1549 | -0.1253 | 0.0320 | 0.0024 | 0.0000 | 0.0000 | -0.1549 |
| 5 | 1 | Long Term | -0.0614 | -0.1549 | -0.1253 | 0.0320 | 0.0024 | 0.0000 | 0.0000 | -0.1549 |
| 5 | 1 | Long Term | -0.0613 | -0.1547 | -0.1251 | 0.0322 | 0.0026 | 0.0000 | 0.0000 | -0.1547 |
| 5 | 1 | Long Term | -0.0594 | -0.1621 | -0.1291 | 0.0433 | 0.0103 | 0.0000 | 0.0000 | -0.1621 |
| 5 | 1 | Long Term | -0.0589 | -0.1639 | -0.1301 | 0.0461 | 0.0122 | 0.0000 | 0.0000 | -0.1639 |
| 5 | 1 | Long Term | -0.0547 | -0.1634 | -0.1234 | 0.0539 | 0.0139 | 0.0000 | 0.0000 | -0.1634 |
| 5 | 1 | Strength Check: | -0.0613 | -0.1547 | -0.1251 | 0.0322 | 0.0026 | 0.0000 | 0.0000 | -0.1547 |
| 5 | 1 | Strength Check: | -0.0613 | -0.1547 | -0.1251 | 0.0322 | 0.0026 | 0.0000 | 0.0000 | -0.1547 |
| 5 | 1 | Strength Check: | -0.0613 | -0.1547 | -0.1251 | 0.0322 | 0.0026 | 0.0000 | 0.0000 | -0.1547 |
| 5 | 1 | Strength Check: | -0.0613 | -0.1547 | -0.1251 | 0.0322 | 0.0026 | 0.0000 | 0.0000 | -0.1547 |
| 5 | 1 | Strength Check: | 0.0069 | -0.0880 | -0.0584 | 0.1017 | 0.0721 | 0.0000 | 0.0000 | 0.1017 |
| 5 | 1 | Strength Check: | -0.0547 | -0.1634 | -0.1234 | 0.0539 | 0.0139 | 0.0000 | 0.0000 | -0.1634 |
| 5 | 2 | Set Precast In | 0.0000 | 0.0000 | 0.0000 | 0.0000 | 0.0000 | 0.0000 | 0.0000 | 0.0000 |
| 5 | 2 | Set Precast In | 0.0000 | 0.0046 | -0.0045 | -0.0045 | 0.0046 | 0.0000 | 0.0000 | 0.0046 |
| 5 | 2 | Tension PT: | 0.0000 | 0.0039 | -0.0038 | -0.0038 | 0.0039 | 0.0000 | 0.0000 | 0.0039 |
| 5 | 2 | Tension PT: | 0.0000 | 0.0039 | -0.0038 | -0.0038 | 0.0039 | 0.0000 | 0.0000 | 0.0039 |
| 5 | 2 | Tension PT: | 0.0000 | 0.0039 | -0.0038 | -0.0038 | 0.0039 | 0.0000 | 0.0000 | 0.0039 |

## RESULT : Member Stresses

| Member | Station | Result Case | (P/A) @ Centroid (kips/in²) | Normal Stress @ Point 1 (kips/in²) | Normal Stress @ Point 2 (kips/in²) | Normal Stress @ Point 3 (kips/in²) | Normal Stress @ Point 4 (kips/in²) | Normal Stress @ Point 5 | Normal Stress @ Point 6 | Max ABS Total Stress (kips/in²) |
|---|---|---|---|---|---|---|---|---|---|---|
| 5 | 2 | Tension PT: | 0.0000 | 0.0039 | -0.0038 | -0.0038 | 0.0039 | 0.0000 | 0.0000 | 0.0039 |
| 5 | 2 | Tension PT: | -0.0704 | -0.0675 | -0.0753 | -0.0733 | -0.0655 | 0.0000 | 0.0000 | -0.0753 |
| 5 | 2 | Add | -0.0704 | -0.0675 | -0.0753 | -0.0733 | -0.0655 | 0.0000 | 0.0000 | -0.0753 |
| 5 | 2 | Add | -0.0704 | -0.0675 | -0.0753 | -0.0733 | -0.0655 | 0.0000 | 0.0000 | -0.0753 |
| 5 | 2 | Add | -0.0704 | -0.0675 | -0.0753 | -0.0733 | -0.0655 | 0.0000 | 0.0000 | -0.0753 |
| 5 | 2 | Add | -0.0704 | -0.0674 | -0.0752 | -0.0733 | -0.0655 | 0.0000 | 0.0000 | -0.0752 |
| 5 | 2 | Add | -0.0703 | -0.0597 | -0.0829 | -0.0809 | -0.0577 | 0.0000 | 0.0000 | -0.0829 |
| 5 | 2 | Backfill to Grade: | -0.0703 | -0.0612 | -0.0813 | -0.0794 | -0.0593 | 0.0000 | 0.0000 | -0.0813 |
| 5 | 2 | Backfill to Grade: | -0.0703 | -0.0612 | -0.0813 | -0.0794 | -0.0593 | 0.0000 | 0.0000 | -0.0813 |
| 5 | 2 | Backfill to Grade: | -0.0703 | -0.0612 | -0.0813 | -0.0794 | -0.0593 | 0.0000 | 0.0000 | -0.0813 |
| 5 | 2 | Backfill to Grade: | -0.0703 | -0.0611 | -0.0813 | -0.0794 | -0.0592 | 0.0000 | 0.0000 | -0.0813 |
| 5 | 2 | Backfill to Grade: | -0.0635 | -0.0075 | -0.0277 | -0.1194 | -0.0992 | 0.0000 | 0.0000 | -0.1194 |
| 5 | 2 | Backfill to Grade: | -0.0616 | 0.0089 | -0.0114 | -0.1321 | -0.1118 | 0.0000 | 0.0000 | -0.1321 |
| 5 | 2 | Pave: Pave: | -0.0635 | -0.0155 | -0.0356 | -0.1114 | -0.0913 | 0.0000 | 0.0000 | -0.1114 |
| 5 | 2 | Pave: Pave: | -0.0635 | -0.0155 | -0.0356 | -0.1114 | -0.0913 | 0.0000 | 0.0000 | -0.1114 |
| 5 | 2 | Pave: Pave: PT | -0.0635 | -0.0155 | -0.0356 | -0.1114 | -0.0913 | 0.0000 | 0.0000 | -0.1114 |
| 5 | 2 | Pave: Pave: | -0.0635 | -0.0155 | -0.0356 | -0.1115 | -0.0913 | 0.0000 | 0.0000 | -0.1115 |
| 5 | 2 | Pave: Pave: step | -0.0635 | -0.0143 | -0.0368 | -0.1126 | -0.0902 | 0.0000 | 0.0000 | -0.1126 |
| 5 | 2 | Open Bridge to | -0.0635 | -0.0159 | -0.0380 | -0.1111 | -0.0890 | 0.0000 | 0.0000 | -0.1111 |
| 5 | 2 | Open Bridge to | -0.0635 | -0.0159 | -0.0380 | -0.1111 | -0.0890 | 0.0000 | 0.0000 | -0.1111 |
| 5 | 2 | Open Bridge to | -0.0635 | -0.0159 | -0.0380 | -0.1111 | -0.0890 | 0.0000 | 0.0000 | -0.1111 |
| 5 | 2 | Open Bridge to | -0.0635 | -0.0159 | -0.0380 | -0.1110 | -0.0890 | 0.0000 | 0.0000 | -0.1110 |
| 5 | 2 | Open Bridge to | -0.0611 | 0.0099 | -0.0229 | -0.1321 | -0.0993 | 0.0000 | 0.0000 | -0.1321 |
| 5 | 2 | Open Bridge to | -0.0616 | 0.0047 | -0.0259 | -0.1279 | -0.0972 | 0.0000 | 0.0000 | -0.1279 |
| 5 | 2 | Partial Live Load | -0.0635 | -0.0169 | -0.0388 | -0.1101 | -0.0881 | 0.0000 | 0.0000 | -0.1101 |
| 5 | 2 | Partial Live Load | -0.0635 | -0.0169 | -0.0388 | -0.1101 | -0.0881 | 0.0000 | 0.0000 | -0.1101 |
| 5 | 2 | Partial Live Load | -0.0635 | -0.0169 | -0.0388 | -0.1101 | -0.0881 | 0.0000 | 0.0000 | -0.1101 |
| 5 | 2 | Partial Live Load | -0.0635 | -0.0169 | -0.0388 | -0.1101 | -0.0881 | 0.0000 | 0.0000 | -0.1101 |
| 5 | 2 | Partial Live Load | -0.0632 | -0.0143 | -0.0373 | -0.1122 | -0.0891 | 0.0000 | 0.0000 | -0.1122 |
| 5 | 2 | Remove Long | -0.0632 | -0.0690 | -0.0783 | -0.0575 | -0.0481 | 0.0000 | 0.0000 | -0.0783 |
| 5 | 2 | Remove Long | -0.0632 | -0.0690 | -0.0783 | -0.0575 | -0.0481 | 0.0000 | 0.0000 | -0.0783 |
| 5 | 2 | Remove Long | -0.0632 | -0.0690 | -0.0783 | -0.0575 | -0.0481 | 0.0000 | 0.0000 | -0.0783 |
| 5 | 2 | Remove Long | -0.0602 | -0.0659 | -0.0753 | -0.0545 | -0.0451 | 0.0000 | 0.0000 | -0.0753 |
| 5 | 2 | Remove Long | -0.0604 | -0.0685 | -0.0768 | -0.0524 | -0.0441 | 0.0000 | 0.0000 | -0.0768 |

## RESULT : Member Stresses

| Member | Station | Result Case | (P/A) @ Centroid (kips/in²) | Normal Stress @ Point 1 (kips/in²) | Normal Stress @ Point 2 (kips/in²) | Normal Stress @ Point 3 (kips/in²) | Normal Stress @ Point 4 (kips/in²) | Normal Stress @ Point 5 | Normal Stress @ Point 6 | Max ABS Total Stress (kips/in²) |
|---|---|---|---|---|---|---|---|---|---|---|
| 5 | 2 | Long Term | -0.0604 | -0.0676 | -0.0761 | -0.0533 | -0.0448 | 0.0000 | 0.0000 | -0.0761 |
| 5 | 2 | Long Term | -0.0604 | -0.0676 | -0.0761 | -0.0533 | -0.0448 | 0.0000 | 0.0000 | -0.0761 |
| 5 | 2 | Long Term | -0.0604 | -0.0676 | -0.0761 | -0.0533 | -0.0448 | 0.0000 | 0.0000 | -0.0761 |
| 5 | 2 | Long Term | -0.0603 | -0.0674 | -0.0759 | -0.0531 | -0.0446 | 0.0000 | 0.0000 | -0.0759 |
| 5 | 2 | Long Term | -0.0584 | -0.0468 | -0.0639 | -0.0700 | -0.0529 | 0.0000 | 0.0000 | -0.0700 |
| 5 | 2 | Long Term | -0.0579 | -0.0417 | -0.0609 | -0.0742 | -0.0550 | 0.0000 | 0.0000 | -0.0742 |
| 5 | 2 | Long Term | -0.0537 | -0.0292 | -0.0637 | -0.0783 | -0.0437 | 0.0000 | 0.0000 | -0.0783 |
| 5 | 2 | Strength Check: | -0.0603 | -0.0674 | -0.0759 | -0.0531 | -0.0446 | 0.0000 | 0.0000 | -0.0759 |
| 5 | 2 | Strength Check: | -0.0603 | -0.0674 | -0.0759 | -0.0531 | -0.0446 | 0.0000 | 0.0000 | -0.0759 |
| 5 | 2 | Strength Check: | -0.0603 | -0.0674 | -0.0759 | -0.0531 | -0.0446 | 0.0000 | 0.0000 | -0.0759 |
| 5 | 2 | Strength Check: | -0.0603 | -0.0674 | -0.0759 | -0.0531 | -0.0446 | 0.0000 | 0.0000 | -0.0759 |
| 5 | 2 | Strength Check: | 0.0069 | 0.0007 | -0.0078 | 0.0131 | 0.0216 | 0.0000 | 0.0000 | 0.0216 |
| 5 | 2 | Strength Check: | -0.0537 | -0.0292 | -0.0637 | -0.0783 | -0.0437 | 0.0000 | 0.0000 | -0.0783 |
| 6 | 0 | Set Precast In | 0.0000 | 0.0000 | 0.0000 | 0.0000 | 0.0000 | 0.0000 | 0.0000 | 0.0000 |
| 6 | 0 | Set Precast In | 0.0000 | 0.0045 | -0.0046 | -0.0046 | 0.0045 | 0.0000 | 0.0000 | -0.0046 |
| 6 | 0 | Tension PT: | 0.0000 | 0.0038 | -0.0039 | -0.0039 | 0.0038 | 0.0000 | 0.0000 | -0.0039 |
| 6 | 0 | Tension PT: | 0.0000 | 0.0038 | -0.0039 | -0.0039 | 0.0038 | 0.0000 | 0.0000 | -0.0039 |
| 6 | 0 | Tension PT: | 0.0000 | 0.0038 | -0.0039 | -0.0039 | 0.0038 | 0.0000 | 0.0000 | -0.0039 |
| 6 | 0 | Tension PT: | 0.0000 | 0.0038 | -0.0039 | -0.0039 | 0.0038 | 0.0000 | 0.0000 | -0.0039 |
| 6 | 0 | Tension PT: | -0.0705 | -0.0675 | -0.0754 | -0.0734 | -0.0655 | 0.0000 | 0.0000 | -0.0754 |
| 6 | 0 | Add | -0.0705 | -0.0675 | -0.0753 | -0.0734 | -0.0656 | 0.0000 | 0.0000 | -0.0753 |
| 6 | 0 | Add | -0.0705 | -0.0675 | -0.0753 | -0.0734 | -0.0656 | 0.0000 | 0.0000 | -0.0753 |
| 6 | 0 | Add | -0.0705 | -0.0675 | -0.0753 | -0.0734 | -0.0656 | 0.0000 | 0.0000 | -0.0753 |
| 6 | 0 | Add | -0.0704 | -0.0675 | -0.0753 | -0.0733 | -0.0656 | 0.0000 | 0.0000 | -0.0753 |
| 6 | 0 | Add | -0.0705 | -0.0598 | -0.0830 | -0.0811 | -0.0579 | 0.0000 | 0.0000 | -0.0830 |
| 6 | 0 | Backfill to Grade: | -0.0705 | -0.0614 | -0.0815 | -0.0796 | -0.0594 | 0.0000 | 0.0000 | -0.0815 |
| 6 | 0 | Backfill to Grade: | -0.0705 | -0.0614 | -0.0815 | -0.0796 | -0.0594 | 0.0000 | 0.0000 | -0.0815 |
| 6 | 0 | Backfill to Grade: | -0.0705 | -0.0614 | -0.0815 | -0.0796 | -0.0594 | 0.0000 | 0.0000 | -0.0815 |
| 6 | 0 | Backfill to Grade: | -0.0704 | -0.0613 | -0.0815 | -0.0795 | -0.0594 | 0.0000 | 0.0000 | -0.0815 |
| 6 | 0 | Backfill to Grade: | -0.0626 | -0.0074 | -0.0274 | -0.1179 | -0.0978 | 0.0000 | 0.0000 | -0.1179 |
| 6 | 0 | Backfill to Grade: | -0.0606 | 0.0091 | -0.0109 | -0.1303 | -0.1102 | 0.0000 | 0.0000 | -0.1303 |
| 6 | 0 | Pave: Pave: | -0.0626 | -0.0154 | -0.0353 | -0.1099 | -0.0899 | 0.0000 | 0.0000 | -0.1099 |
| 6 | 0 | Pave: Pave: | -0.0626 | -0.0154 | -0.0353 | -0.1099 | -0.0899 | 0.0000 | 0.0000 | -0.1099 |
| 6 | 0 | Pave: Pave: PT | -0.0626 | -0.0154 | -0.0353 | -0.1099 | -0.0899 | 0.0000 | 0.0000 | -0.1099 |

## RESULT : Member Stresses

| Member | Station | Result Case | (P/A) @ Centroid (kips/in²) | Normal Stress @ Point 1 (kips/in²) | Normal Stress @ Point 2 (kips/in²) | Normal Stress @ Point 3 (kips/in²) | Normal Stress @ Point 4 (kips/in²) | Normal Stress @ Point 5 | Normal Stress @ Point 6 | Max ABS Total Stress (kips/in²) |
|---|---|---|---|---|---|---|---|---|---|---|
| 6 | 0 | Pave: Pave: | -0.0627 | -0.0154 | -0.0354 | -0.1099 | -0.0900 | 0.0000 | 0.0000 | -0.1099 |
| 6 | 0 | Pave: Pave: step | -0.0627 | -0.0143 | -0.0365 | -0.1110 | -0.0888 | 0.0000 | 0.0000 | -0.1110 |
| 6 | 0 | Open Bridge to | -0.0627 | -0.0159 | -0.0377 | -0.1095 | -0.0876 | 0.0000 | 0.0000 | -0.1095 |
| 6 | 0 | Open Bridge to | -0.0627 | -0.0159 | -0.0377 | -0.1095 | -0.0876 | 0.0000 | 0.0000 | -0.1095 |
| 6 | 0 | Open Bridge to | -0.0627 | -0.0159 | -0.0377 | -0.1095 | -0.0876 | 0.0000 | 0.0000 | -0.1095 |
| 6 | 0 | Open Bridge to | -0.0627 | -0.0158 | -0.0377 | -0.1095 | -0.0876 | 0.0000 | 0.0000 | -0.1095 |
| 6 | 0 | Open Bridge to | -0.0601 | 0.0101 | -0.0225 | -0.1303 | -0.0978 | 0.0000 | 0.0000 | -0.1303 |
| 6 | 0 | Open Bridge to | -0.0606 | 0.0049 | -0.0255 | -0.1262 | -0.0958 | 0.0000 | 0.0000 | -0.1262 |
| 6 | 0 | Partial Live Load | -0.0627 | -0.0168 | -0.0386 | -0.1085 | -0.0867 | 0.0000 | 0.0000 | -0.1085 |
| 6 | 0 | Partial Live Load | -0.0627 | -0.0168 | -0.0386 | -0.1085 | -0.0867 | 0.0000 | 0.0000 | -0.1085 |
| 6 | 0 | Partial Live Load | -0.0627 | -0.0168 | -0.0386 | -0.1085 | -0.0867 | 0.0000 | 0.0000 | -0.1085 |
| 6 | 0 | Partial Live Load | -0.0627 | -0.0168 | -0.0386 | -0.1085 | -0.0867 | 0.0000 | 0.0000 | -0.1085 |
| 6 | 0 | Partial Live Load | -0.0624 | -0.0142 | -0.0371 | -0.1106 | -0.0878 | 0.0000 | 0.0000 | -0.1106 |
| 6 | 0 | Remove Long | -0.0624 | -0.0689 | -0.0781 | -0.0559 | -0.0468 | 0.0000 | 0.0000 | -0.0781 |
| 6 | 0 | Remove Long | -0.0624 | -0.0689 | -0.0781 | -0.0559 | -0.0468 | 0.0000 | 0.0000 | -0.0781 |
| 6 | 0 | Remove Long | -0.0624 | -0.0689 | -0.0781 | -0.0559 | -0.0468 | 0.0000 | 0.0000 | -0.0781 |
| 6 | 0 | Remove Long | -0.0594 | -0.0659 | -0.0750 | -0.0529 | -0.0438 | 0.0000 | 0.0000 | -0.0750 |
| 6 | 0 | Remove Long | -0.0596 | -0.0685 | -0.0765 | -0.0508 | -0.0428 | 0.0000 | 0.0000 | -0.0765 |
| 6 | 0 | Long Term | -0.0596 | -0.0675 | -0.0759 | -0.0518 | -0.0434 | 0.0000 | 0.0000 | -0.0759 |
| 6 | 0 | Long Term | -0.0596 | -0.0675 | -0.0759 | -0.0518 | -0.0434 | 0.0000 | 0.0000 | -0.0759 |
| 6 | 0 | Long Term | -0.0596 | -0.0675 | -0.0759 | -0.0518 | -0.0434 | 0.0000 | 0.0000 | -0.0759 |
| 6 | 0 | Long Term | -0.0595 | -0.0674 | -0.0757 | -0.0516 | -0.0433 | 0.0000 | 0.0000 | -0.0757 |
| 6 | 0 | Long Term | -0.0575 | -0.0466 | -0.0635 | -0.0683 | -0.0514 | 0.0000 | 0.0000 | -0.0683 |
| 6 | 0 | Long Term | -0.0569 | -0.0414 | -0.0604 | -0.0724 | -0.0535 | 0.0000 | 0.0000 | -0.0724 |
| 6 | 0 | Long Term | -0.0523 | -0.0286 | -0.0628 | -0.0760 | -0.0419 | 0.0000 | 0.0000 | -0.0760 |
| 6 | 0 | Strength Check: | -0.0595 | -0.0674 | -0.0757 | -0.0516 | -0.0433 | 0.0000 | 0.0000 | -0.0757 |
| 6 | 0 | Strength Check: | -0.0595 | -0.0674 | -0.0757 | -0.0516 | -0.0433 | 0.0000 | 0.0000 | -0.0757 |
| 6 | 0 | Strength Check: | -0.0595 | -0.0674 | -0.0757 | -0.0516 | -0.0433 | 0.0000 | 0.0000 | -0.0757 |
| 6 | 0 | Strength Check: | -0.0595 | -0.0674 | -0.0757 | -0.0516 | -0.0433 | 0.0000 | 0.0000 | -0.0757 |
| 6 | 0 | Strength Check: | 0.0077 | 0.0007 | -0.0075 | 0.0147 | 0.0229 | 0.0000 | 0.0000 | 0.0229 |
| 6 | 0 | Strength Check: | -0.0523 | -0.0286 | -0.0628 | -0.0760 | -0.0419 | 0.0000 | 0.0000 | -0.0760 |
| 6 | 1 | Set Precast In | 0.0000 | 0.0000 | 0.0000 | 0.0000 | 0.0000 | 0.0000 | 0.0000 | 0.0000 |
| 6 | 1 | Set Precast In | 0.0000 | -0.0006 | 0.0005 | 0.0005 | -0.0006 | 0.0000 | 0.0000 | -0.0006 |
| 6 | 1 | Tension PT: | 0.0000 | -0.0012 | 0.0012 | 0.0012 | -0.0012 | 0.0000 | 0.0000 | -0.0012 |

## RESULT : Member Stresses

| Member | Station | Result Case | (P/A) @ Centroid (kips/in²) | Normal Stress @ Point 1 (kips/in²) | Normal Stress @ Point 2 (kips/in²) | Normal Stress @ Point 3 (kips/in²) | Normal Stress @ Point 4 (kips/in²) | Normal Stress @ Point 5 | Normal Stress @ Point 6 | Max ABS Total Stress (kips/in²) |
|---|---|---|---|---|---|---|---|---|---|---|
| 6 | 1 | Tension PT: | 0.0000 | -0.0012 | 0.0012 | 0.0012 | -0.0012 | 0.0000 | 0.0000 | -0.0012 |
| 6 | 1 | Tension PT: | 0.0000 | -0.0012 | 0.0012 | 0.0012 | -0.0012 | 0.0000 | 0.0000 | -0.0012 |
| 6 | 1 | Tension PT: | 0.0000 | -0.0012 | 0.0012 | 0.0012 | -0.0012 | 0.0000 | 0.0000 | -0.0012 |
| 6 | 1 | Tension PT: | -0.0695 | -0.0690 | -0.0673 | -0.0699 | -0.0717 | 0.0000 | 0.0000 | -0.0717 |
| 6 | 1 | Add | -0.0695 | -0.0691 | -0.0672 | -0.0699 | -0.0717 | 0.0000 | 0.0000 | -0.0717 |
| 6 | 1 | Add | -0.0695 | -0.0691 | -0.0672 | -0.0699 | -0.0717 | 0.0000 | 0.0000 | -0.0717 |
| 6 | 1 | Add | -0.0695 | -0.0691 | -0.0672 | -0.0699 | -0.0717 | 0.0000 | 0.0000 | -0.0717 |
| 6 | 1 | Add | -0.0694 | -0.0690 | -0.0672 | -0.0698 | -0.0717 | 0.0000 | 0.0000 | -0.0717 |
| 6 | 1 | Add | -0.0694 | -0.0717 | -0.0645 | -0.0672 | -0.0744 | 0.0000 | 0.0000 | -0.0744 |
| 6 | 1 | Backfill to Grade: | -0.0694 | -0.0732 | -0.0630 | -0.0657 | -0.0759 | 0.0000 | 0.0000 | -0.0759 |
| 6 | 1 | Backfill to Grade: | -0.0694 | -0.0732 | -0.0630 | -0.0657 | -0.0759 | 0.0000 | 0.0000 | -0.0759 |
| 6 | 1 | Backfill to Grade: | -0.0694 | -0.0732 | -0.0630 | -0.0657 | -0.0759 | 0.0000 | 0.0000 | -0.0759 |
| 6 | 1 | Backfill to Grade: | -0.0694 | -0.0732 | -0.0629 | -0.0656 | -0.0759 | 0.0000 | 0.0000 | -0.0759 |
| 6 | 1 | Backfill to Grade: | -0.0617 | -0.0944 | -0.0839 | -0.0290 | -0.0394 | 0.0000 | 0.0000 | -0.0944 |
| 6 | 1 | Backfill to Grade: | -0.0596 | -0.1010 | -0.0907 | -0.0183 | -0.0285 | 0.0000 | 0.0000 | -0.1010 |
| 6 | 1 | Pave: Pave: | -0.0617 | -0.1022 | -0.0917 | -0.0211 | -0.0316 | 0.0000 | 0.0000 | -0.1022 |
| 6 | 1 | Pave: Pave: | -0.0617 | -0.1022 | -0.0917 | -0.0211 | -0.0316 | 0.0000 | 0.0000 | -0.1022 |
| 6 | 1 | Pave: Pave: PT | -0.0617 | -0.1022 | -0.0917 | -0.0211 | -0.0316 | 0.0000 | 0.0000 | -0.1022 |
| 6 | 1 | Pave: Pave: | -0.0617 | -0.1022 | -0.0917 | -0.0212 | -0.0317 | 0.0000 | 0.0000 | -0.1022 |
| 6 | 1 | Pave: Pave: step | -0.0617 | -0.1026 | -0.0913 | -0.0208 | -0.0321 | 0.0000 | 0.0000 | -0.1026 |
| 6 | 1 | Open Bridge to | -0.0617 | -0.1041 | -0.0925 | -0.0192 | -0.0309 | 0.0000 | 0.0000 | -0.1041 |
| 6 | 1 | Open Bridge to | -0.0617 | -0.1041 | -0.0925 | -0.0192 | -0.0309 | 0.0000 | 0.0000 | -0.1041 |
| 6 | 1 | Open Bridge to | -0.0617 | -0.1041 | -0.0925 | -0.0192 | -0.0309 | 0.0000 | 0.0000 | -0.1041 |
| 6 | 1 | Open Bridge to | -0.0617 | -0.1041 | -0.0925 | -0.0192 | -0.0308 | 0.0000 | 0.0000 | -0.1041 |
| 6 | 1 | Open Bridge to | -0.0591 | -0.1142 | -0.0991 | -0.0040 | -0.0191 | 0.0000 | 0.0000 | -0.1142 |
| 6 | 1 | Open Bridge to | -0.0596 | -0.1122 | -0.0978 | -0.0071 | -0.0215 | 0.0000 | 0.0000 | -0.1122 |
| 6 | 1 | Partial Live Load | -0.0617 | -0.1051 | -0.0934 | -0.0183 | -0.0300 | 0.0000 | 0.0000 | -0.1051 |
| 6 | 1 | Partial Live Load | -0.0617 | -0.1051 | -0.0934 | -0.0183 | -0.0300 | 0.0000 | 0.0000 | -0.1051 |
| 6 | 1 | Partial Live Load | -0.0617 | -0.1051 | -0.0934 | -0.0183 | -0.0300 | 0.0000 | 0.0000 | -0.1051 |
| 6 | 1 | Partial Live Load | -0.0617 | -0.1051 | -0.0934 | -0.0183 | -0.0300 | 0.0000 | 0.0000 | -0.1051 |
| 6 | 1 | Partial Live Load | -0.0614 | -0.1061 | -0.0940 | -0.0167 | -0.0288 | 0.0000 | 0.0000 | -0.1061 |
| 6 | 1 | Remove Long | -0.0614 | -0.1600 | -0.1341 | 0.0372 | 0.0112 | 0.0000 | 0.0000 | -0.1600 |
| 6 | 1 | Remove Long | -0.0614 | -0.1600 | -0.1341 | 0.0371 | 0.0112 | 0.0000 | 0.0000 | -0.1600 |
| 6 | 1 | Remove Long | -0.0614 | -0.1600 | -0.1341 | 0.0371 | 0.0112 | 0.0000 | 0.0000 | -0.1600 |

## RESULT : Member Stresses

| Member | Station | Result Case | (P/A) @ Centroid (kips/in²) | Normal Stress @ Point 1 (kips/in²) | Normal Stress @ Point 2 (kips/in²) | Normal Stress @ Point 3 (kips/in²) | Normal Stress @ Point 4 (kips/in²) | Normal Stress @ Point 5 | Normal Stress @ Point 6 | Max ABS Total Stress (kips/in²) |
|---|---|---|---|---|---|---|---|---|---|---|
| 6 | 1 | Remove Long | -0.0584 | -0.1571 | -0.1311 | 0.0402 | 0.0143 | 0.0000 | 0.0000 | -0.1571 |
| 6 | 1 | Remove Long | -0.0587 | -0.1561 | -0.1305 | 0.0387 | 0.0131 | 0.0000 | 0.0000 | -0.1561 |
| 6 | 1 | Long Term | -0.0587 | -0.1552 | -0.1298 | 0.0378 | 0.0125 | 0.0000 | 0.0000 | -0.1552 |
| 6 | 1 | Long Term | -0.0587 | -0.1552 | -0.1298 | 0.0378 | 0.0125 | 0.0000 | 0.0000 | -0.1552 |
| 6 | 1 | Long Term | -0.0587 | -0.1552 | -0.1298 | 0.0378 | 0.0125 | 0.0000 | 0.0000 | -0.1552 |
| 6 | 1 | Long Term | -0.0585 | -0.1550 | -0.1297 | 0.0380 | 0.0126 | 0.0000 | 0.0000 | -0.1550 |
| 6 | 1 | Long Term | -0.0565 | -0.1631 | -0.1350 | 0.0501 | 0.0220 | 0.0000 | 0.0000 | -0.1631 |
| 6 | 1 | Long Term | -0.0560 | -0.1651 | -0.1363 | 0.0532 | 0.0243 | 0.0000 | 0.0000 | -0.1651 |
| 6 | 1 | Long Term | -0.0514 | -0.1642 | -0.1307 | 0.0615 | 0.0280 | 0.0000 | 0.0000 | -0.1642 |
| 6 | 1 | Strength Check: | -0.0585 | -0.1550 | -0.1297 | 0.0380 | 0.0126 | 0.0000 | 0.0000 | -0.1550 |
| 6 | 1 | Strength Check: | -0.0585 | -0.1550 | -0.1297 | 0.0380 | 0.0126 | 0.0000 | 0.0000 | -0.1550 |
| 6 | 1 | Strength Check: | -0.0585 | -0.1550 | -0.1297 | 0.0380 | 0.0126 | 0.0000 | 0.0000 | -0.1550 |
| 6 | 1 | Strength Check: | -0.0585 | -0.1550 | -0.1297 | 0.0380 | 0.0126 | 0.0000 | 0.0000 | -0.1550 |
| 6 | 1 | Strength Check: | 0.0077 | -0.0903 | -0.0644 | 0.1058 | 0.0798 | 0.0000 | 0.0000 | 0.1058 |
| 6 | 1 | Strength Check: | -0.0514 | -0.1642 | -0.1307 | 0.0615 | 0.0280 | 0.0000 | 0.0000 | -0.1642 |
| 6 | 2 | Set Precast In | 0.0000 | 0.0000 | 0.0000 | 0.0000 | 0.0000 | 0.0000 | 0.0000 | 0.0000 |
| 6 | 2 | Set Precast In | 0.0000 | 0.0019 | -0.0018 | -0.0018 | 0.0019 | 0.0000 | 0.0000 | 0.0019 |
| 6 | 2 | Tension PT: | 0.0000 | 0.0012 | -0.0011 | -0.0011 | 0.0012 | 0.0000 | 0.0000 | 0.0012 |
| 6 | 2 | Tension PT: | 0.0000 | 0.0012 | -0.0011 | -0.0011 | 0.0012 | 0.0000 | 0.0000 | 0.0012 |
| 6 | 2 | Tension PT: | 0.0000 | 0.0012 | -0.0011 | -0.0011 | 0.0012 | 0.0000 | 0.0000 | 0.0012 |
| 6 | 2 | Tension PT: | 0.0000 | 0.0012 | -0.0011 | -0.0011 | 0.0012 | 0.0000 | 0.0000 | 0.0012 |
| 6 | 2 | Tension PT: | -0.0685 | -0.0631 | -0.0666 | -0.0739 | -0.0704 | 0.0000 | 0.0000 | -0.0739 |
| 6 | 2 | Add | -0.0685 | -0.0632 | -0.0666 | -0.0738 | -0.0704 | 0.0000 | 0.0000 | -0.0738 |
| 6 | 2 | Add | -0.0685 | -0.0632 | -0.0666 | -0.0738 | -0.0704 | 0.0000 | 0.0000 | -0.0738 |
| 6 | 2 | Add | -0.0685 | -0.0632 | -0.0666 | -0.0738 | -0.0704 | 0.0000 | 0.0000 | -0.0738 |
| 6 | 2 | Add | -0.0685 | -0.0631 | -0.0665 | -0.0738 | -0.0704 | 0.0000 | 0.0000 | -0.0738 |
| 6 | 2 | Add | -0.0684 | -0.0630 | -0.0666 | -0.0739 | -0.0702 | 0.0000 | 0.0000 | -0.0739 |
| 6 | 2 | Backfill to Grade: | -0.0684 | -0.0645 | -0.0651 | -0.0723 | -0.0718 | 0.0000 | 0.0000 | -0.0723 |
| 6 | 2 | Backfill to Grade: | -0.0684 | -0.0645 | -0.0651 | -0.0723 | -0.0718 | 0.0000 | 0.0000 | -0.0723 |
| 6 | 2 | Backfill to Grade: | -0.0684 | -0.0645 | -0.0651 | -0.0723 | -0.0718 | 0.0000 | 0.0000 | -0.0723 |
| 6 | 2 | Backfill to Grade: | -0.0684 | -0.0645 | -0.0651 | -0.0723 | -0.0717 | 0.0000 | 0.0000 | -0.0723 |
| 6 | 2 | Backfill to Grade: | -0.0607 | -0.0278 | -0.0281 | -0.0936 | -0.0933 | 0.0000 | 0.0000 | -0.0936 |
| 6 | 2 | Backfill to Grade: | -0.0587 | -0.0170 | -0.0177 | -0.1003 | -0.0996 | 0.0000 | 0.0000 | -0.1003 |
| 6 | 2 | Pave: Pave: | -0.0607 | -0.0354 | -0.0357 | -0.0859 | -0.0857 | 0.0000 | 0.0000 | -0.0859 |

## RESULT : Member Stresses

| Member | Station | Result Case | (P/A) @ Centroid (kips/in²) | Normal Stress @ Point 1 (kips/in²) | Normal Stress @ Point 2 (kips/in²) | Normal Stress @ Point 3 (kips/in²) | Normal Stress @ Point 4 (kips/in²) | Normal Stress @ Point 5 | Normal Stress @ Point 6 | Max ABS Total Stress (kips/in²) |
|---|---|---|---|---|---|---|---|---|---|---|
| 6 | 2 | Pave: Pave: | -0.0607 | -0.0354 | -0.0357 | -0.0859 | -0.0857 | 0.0000 | 0.0000 | -0.0859 |
| 6 | 2 | Pave: Pave: PT | -0.0607 | -0.0354 | -0.0357 | -0.0859 | -0.0857 | 0.0000 | 0.0000 | -0.0859 |
| 6 | 2 | Pave: Pave: | -0.0607 | -0.0355 | -0.0357 | -0.0860 | -0.0857 | 0.0000 | 0.0000 | -0.0860 |
| 6 | 2 | Pave: Pave: step | -0.0607 | -0.0354 | -0.0357 | -0.0860 | -0.0857 | 0.0000 | 0.0000 | -0.0860 |
| 6 | 2 | Open Bridge to | -0.0607 | -0.0369 | -0.0369 | -0.0845 | -0.0845 | 0.0000 | 0.0000 | -0.0845 |
| 6 | 2 | Open Bridge to | -0.0607 | -0.0369 | -0.0369 | -0.0845 | -0.0845 | 0.0000 | 0.0000 | -0.0845 |
| 6 | 2 | Open Bridge to | -0.0607 | -0.0369 | -0.0369 | -0.0845 | -0.0845 | 0.0000 | 0.0000 | -0.0845 |
| 6 | 2 | Open Bridge to | -0.0607 | -0.0369 | -0.0369 | -0.0845 | -0.0845 | 0.0000 | 0.0000 | -0.0845 |
| 6 | 2 | Open Bridge to | -0.0581 | -0.0234 | -0.0239 | -0.0928 | -0.0924 | 0.0000 | 0.0000 | -0.0928 |
| 6 | 2 | Open Bridge to | -0.0587 | -0.0261 | -0.0265 | -0.0912 | -0.0908 | 0.0000 | 0.0000 | -0.0912 |
| 6 | 2 | Partial Live Load | -0.0607 | -0.0379 | -0.0377 | -0.0835 | -0.0837 | 0.0000 | 0.0000 | -0.0837 |
| 6 | 2 | Partial Live Load | -0.0607 | -0.0379 | -0.0377 | -0.0835 | -0.0837 | 0.0000 | 0.0000 | -0.0837 |
| 6 | 2 | Partial Live Load | -0.0607 | -0.0379 | -0.0377 | -0.0835 | -0.0837 | 0.0000 | 0.0000 | -0.0837 |
| 6 | 2 | Partial Live Load | -0.0607 | -0.0379 | -0.0377 | -0.0835 | -0.0837 | 0.0000 | 0.0000 | -0.0837 |
| 6 | 2 | Partial Live Load | -0.0604 | -0.0365 | -0.0364 | -0.0844 | -0.0845 | 0.0000 | 0.0000 | -0.0845 |
| 6 | 2 | Remove Long | -0.0604 | -0.0896 | -0.0755 | -0.0313 | -0.0453 | 0.0000 | 0.0000 | -0.0896 |
| 6 | 2 | Remove Long | -0.0604 | -0.0896 | -0.0756 | -0.0313 | -0.0453 | 0.0000 | 0.0000 | -0.0896 |
| 6 | 2 | Remove Long | -0.0604 | -0.0896 | -0.0756 | -0.0313 | -0.0453 | 0.0000 | 0.0000 | -0.0896 |
| 6 | 2 | Remove Long | -0.0575 | -0.0868 | -0.0727 | -0.0281 | -0.0422 | 0.0000 | 0.0000 | -0.0868 |
| 6 | 2 | Remove Long | -0.0577 | -0.0882 | -0.0740 | -0.0273 | -0.0414 | 0.0000 | 0.0000 | -0.0882 |
| 6 | 2 | Long Term | -0.0577 | -0.0873 | -0.0734 | -0.0282 | -0.0421 | 0.0000 | 0.0000 | -0.0873 |
| 6 | 2 | Long Term | -0.0577 | -0.0873 | -0.0734 | -0.0282 | -0.0421 | 0.0000 | 0.0000 | -0.0873 |
| 6 | 2 | Long Term | -0.0577 | -0.0873 | -0.0734 | -0.0282 | -0.0421 | 0.0000 | 0.0000 | -0.0873 |
| 6 | 2 | Long Term | -0.0576 | -0.0872 | -0.0733 | -0.0280 | -0.0419 | 0.0000 | 0.0000 | -0.0872 |
| 6 | 2 | Long Term | -0.0555 | -0.0764 | -0.0629 | -0.0347 | -0.0482 | 0.0000 | 0.0000 | -0.0764 |
| 6 | 2 | Long Term | -0.0550 | -0.0737 | -0.0603 | -0.0363 | -0.0497 | 0.0000 | 0.0000 | -0.0737 |
| 6 | 2 | Long Term | -0.0504 | -0.0717 | -0.0596 | -0.0291 | -0.0412 | 0.0000 | 0.0000 | -0.0717 |
| 6 | 2 | Strength Check: | -0.0576 | -0.0872 | -0.0733 | -0.0280 | -0.0419 | 0.0000 | 0.0000 | -0.0872 |
| 6 | 2 | Strength Check: | -0.0576 | -0.0872 | -0.0733 | -0.0280 | -0.0419 | 0.0000 | 0.0000 | -0.0872 |
| 6 | 2 | Strength Check: | -0.0576 | -0.0872 | -0.0733 | -0.0280 | -0.0419 | 0.0000 | 0.0000 | -0.0872 |
| 6 | 2 | Strength Check: | -0.0576 | -0.0872 | -0.0733 | -0.0280 | -0.0419 | 0.0000 | 0.0000 | -0.0872 |
| 6 | 2 | Strength Check: | 0.0077 | -0.0258 | -0.0108 | 0.0413 | 0.0263 | 0.0000 | 0.0000 | 0.0413 |
| 6 | 2 | Strength Check: | -0.0504 | -0.0717 | -0.0596 | -0.0291 | -0.0412 | 0.0000 | 0.0000 | -0.0717 |
| 7 | 0 | Set Precast In | 0.0000 | 0.0000 | 0.0000 | 0.0000 | 0.0000 | 0.0000 | 0.0000 | 0.0000 |

## RESULT : Member Stresses

| Member | Station | Result Case | (P/A) @ Centroid (kips/in²) | Normal Stress @ Point 1 (kips/in²) | Normal Stress @ Point 2 (kips/in²) | Normal Stress @ Point 3 (kips/in²) | Normal Stress @ Point 4 (kips/in²) | Normal Stress @ Point 5 | Normal Stress @ Point 6 | Max ABS Total Stress (kips/in²) |
|---|---|---|---|---|---|---|---|---|---|---|
| 7 | 0 | Set Precast In | 0.0000 | 0.0019 | -0.0018 | -0.0018 | 0.0019 | 0.0000 | 0.0000 | 0.0019 |
| 7 | 0 | Tension PT: | 0.0000 | 0.0012 | -0.0011 | -0.0011 | 0.0012 | 0.0000 | 0.0000 | 0.0012 |
| 7 | 0 | Tension PT: | 0.0000 | 0.0012 | -0.0011 | -0.0011 | 0.0012 | 0.0000 | 0.0000 | 0.0012 |
| 7 | 0 | Tension PT: | 0.0000 | 0.0012 | -0.0011 | -0.0011 | 0.0012 | 0.0000 | 0.0000 | 0.0012 |
| 7 | 0 | Tension PT: | 0.0000 | 0.0012 | -0.0011 | -0.0011 | 0.0012 | 0.0000 | 0.0000 | 0.0012 |
| 7 | 0 | Tension PT: | -0.0685 | -0.0631 | -0.0666 | -0.0739 | -0.0704 | 0.0000 | 0.0000 | -0.0739 |
| 7 | 0 | Add | -0.0685 | -0.0632 | -0.0666 | -0.0738 | -0.0704 | 0.0000 | 0.0000 | -0.0738 |
| 7 | 0 | Add | -0.0685 | -0.0632 | -0.0666 | -0.0738 | -0.0704 | 0.0000 | 0.0000 | -0.0738 |
| 7 | 0 | Add | -0.0685 | -0.0632 | -0.0666 | -0.0738 | -0.0704 | 0.0000 | 0.0000 | -0.0738 |
| 7 | 0 | Add | -0.0685 | -0.0631 | -0.0665 | -0.0738 | -0.0704 | 0.0000 | 0.0000 | -0.0738 |
| 7 | 0 | Add | -0.0684 | -0.0630 | -0.0666 | -0.0739 | -0.0702 | 0.0000 | 0.0000 | -0.0739 |
| 7 | 0 | Backfill to Grade: | -0.0684 | -0.0645 | -0.0651 | -0.0723 | -0.0718 | 0.0000 | 0.0000 | -0.0723 |
| 7 | 0 | Backfill to Grade: | -0.0684 | -0.0645 | -0.0651 | -0.0723 | -0.0718 | 0.0000 | 0.0000 | -0.0723 |
| 7 | 0 | Backfill to Grade: | -0.0684 | -0.0645 | -0.0651 | -0.0723 | -0.0718 | 0.0000 | 0.0000 | -0.0723 |
| 7 | 0 | Backfill to Grade: | -0.0684 | -0.0645 | -0.0651 | -0.0723 | -0.0717 | 0.0000 | 0.0000 | -0.0723 |
| 7 | 0 | Backfill to Grade: | -0.0607 | -0.0278 | -0.0282 | -0.0936 | -0.0932 | 0.0000 | 0.0000 | -0.0936 |
| 7 | 0 | Backfill to Grade: | -0.0587 | -0.0171 | -0.0178 | -0.1002 | -0.0995 | 0.0000 | 0.0000 | -0.1002 |
| 7 | 0 | Pave: Pave: | -0.0607 | -0.0355 | -0.0358 | -0.0859 | -0.0856 | 0.0000 | 0.0000 | -0.0859 |
| 7 | 0 | Pave: Pave: | -0.0607 | -0.0355 | -0.0358 | -0.0859 | -0.0856 | 0.0000 | 0.0000 | -0.0859 |
| 7 | 0 | Pave: Pave: PT | -0.0607 | -0.0355 | -0.0358 | -0.0859 | -0.0856 | 0.0000 | 0.0000 | -0.0859 |
| 7 | 0 | Pave: Pave: | -0.0607 | -0.0355 | -0.0358 | -0.0859 | -0.0856 | 0.0000 | 0.0000 | -0.0859 |
| 7 | 0 | Pave: Pave: step | -0.0607 | -0.0355 | -0.0358 | -0.0859 | -0.0856 | 0.0000 | 0.0000 | -0.0859 |
| 7 | 0 | Open Bridge to | -0.0607 | -0.0370 | -0.0370 | -0.0844 | -0.0844 | 0.0000 | 0.0000 | -0.0844 |
| 7 | 0 | Open Bridge to | -0.0607 | -0.0370 | -0.0370 | -0.0844 | -0.0844 | 0.0000 | 0.0000 | -0.0844 |
| 7 | 0 | Open Bridge to | -0.0607 | -0.0370 | -0.0370 | -0.0844 | -0.0844 | 0.0000 | 0.0000 | -0.0844 |
| 7 | 0 | Open Bridge to | -0.0607 | -0.0370 | -0.0370 | -0.0844 | -0.0844 | 0.0000 | 0.0000 | -0.0844 |
| 7 | 0 | Open Bridge to | -0.0581 | -0.0235 | -0.0240 | -0.0927 | -0.0923 | 0.0000 | 0.0000 | -0.0927 |
| 7 | 0 | Open Bridge to | -0.0587 | -0.0262 | -0.0266 | -0.0911 | -0.0907 | 0.0000 | 0.0000 | -0.0911 |
| 7 | 0 | Partial Live Load | -0.0607 | -0.0380 | -0.0378 | -0.0834 | -0.0836 | 0.0000 | 0.0000 | -0.0836 |
| 7 | 0 | Partial Live Load | -0.0607 | -0.0380 | -0.0378 | -0.0834 | -0.0836 | 0.0000 | 0.0000 | -0.0836 |
| 7 | 0 | Partial Live Load | -0.0607 | -0.0380 | -0.0378 | -0.0834 | -0.0836 | 0.0000 | 0.0000 | -0.0836 |
| 7 | 0 | Partial Live Load | -0.0607 | -0.0380 | -0.0378 | -0.0834 | -0.0836 | 0.0000 | 0.0000 | -0.0836 |
| 7 | 0 | Partial Live Load | -0.0604 | -0.0366 | -0.0365 | -0.0843 | -0.0844 | 0.0000 | 0.0000 | -0.0844 |
| 7 | 0 | Remove Long | -0.0604 | -0.0897 | -0.0756 | -0.0312 | -0.0452 | 0.0000 | 0.0000 | -0.0897 |

## RESULT : Member Stresses

| Member | Station | Result Case | (P/A) @ Centroid (kips/in²) | Normal Stress @ Point 1 (kips/in²) | Normal Stress @ Point 2 (kips/in²) | Normal Stress @ Point 3 (kips/in²) | Normal Stress @ Point 4 (kips/in²) | Normal Stress @ Point 5 | Normal Stress @ Point 6 | Max ABS Total Stress (kips/in²) |
|---|---|---|---|---|---|---|---|---|---|---|
| 7 | 0 | Remove Long | -0.0604 | -0.0897 | -0.0757 | -0.0312 | -0.0452 | 0.0000 | 0.0000 | -0.0897 |
| 7 | 0 | Remove Long | -0.0604 | -0.0897 | -0.0757 | -0.0312 | -0.0452 | 0.0000 | 0.0000 | -0.0897 |
| 7 | 0 | Remove Long | -0.0575 | -0.0869 | -0.0728 | -0.0280 | -0.0421 | 0.0000 | 0.0000 | -0.0869 |
| 7 | 0 | Remove Long | -0.0577 | -0.0883 | -0.0741 | -0.0272 | -0.0413 | 0.0000 | 0.0000 | -0.0883 |
| 7 | 0 | Long Term | -0.0577 | -0.0874 | -0.0735 | -0.0281 | -0.0420 | 0.0000 | 0.0000 | -0.0874 |
| 7 | 0 | Long Term | -0.0577 | -0.0874 | -0.0735 | -0.0281 | -0.0420 | 0.0000 | 0.0000 | -0.0874 |
| 7 | 0 | Long Term | -0.0577 | -0.0874 | -0.0735 | -0.0281 | -0.0420 | 0.0000 | 0.0000 | -0.0874 |
| 7 | 0 | Long Term | -0.0576 | -0.0873 | -0.0734 | -0.0279 | -0.0418 | 0.0000 | 0.0000 | -0.0873 |
| 7 | 0 | Long Term | -0.0555 | -0.0765 | -0.0630 | -0.0345 | -0.0481 | 0.0000 | 0.0000 | -0.0765 |
| 7 | 0 | Long Term | -0.0550 | -0.0738 | -0.0604 | -0.0362 | -0.0496 | 0.0000 | 0.0000 | -0.0738 |
| 7 | 0 | Long Term | -0.0504 | -0.0718 | -0.0597 | -0.0289 | -0.0410 | 0.0000 | 0.0000 | -0.0718 |
| 7 | 0 | Strength Check: | -0.0576 | -0.0873 | -0.0734 | -0.0279 | -0.0418 | 0.0000 | 0.0000 | -0.0873 |
| 7 | 0 | Strength Check: | -0.0576 | -0.0873 | -0.0734 | -0.0279 | -0.0418 | 0.0000 | 0.0000 | -0.0873 |
| 7 | 0 | Strength Check: | -0.0576 | -0.0873 | -0.0734 | -0.0279 | -0.0418 | 0.0000 | 0.0000 | -0.0873 |
| 7 | 0 | Strength Check: | -0.0576 | -0.0873 | -0.0734 | -0.0279 | -0.0418 | 0.0000 | 0.0000 | -0.0873 |
| 7 | 0 | Strength Check: | 0.0077 | -0.0259 | -0.0110 | 0.0414 | 0.0264 | 0.0000 | 0.0000 | 0.0414 |
| 7 | 0 | Strength Check: | -0.0504 | -0.0718 | -0.0597 | -0.0289 | -0.0410 | 0.0000 | 0.0000 | -0.0718 |
| 7 | 1 | Set Precast In | 0.0000 | 0.0000 | 0.0000 | 0.0000 | 0.0000 | 0.0000 | 0.0000 | 0.0000 |
| 7 | 1 | Set Precast In | 0.0000 | 0.0041 | -0.0041 | -0.0041 | 0.0041 | 0.0000 | 0.0000 | 0.0041 |
| 7 | 1 | Tension PT: | 0.0000 | 0.0035 | -0.0034 | -0.0034 | 0.0035 | 0.0000 | 0.0000 | 0.0035 |
| 7 | 1 | Tension PT: | 0.0000 | 0.0035 | -0.0034 | -0.0034 | 0.0035 | 0.0000 | 0.0000 | 0.0035 |
| 7 | 1 | Tension PT: | 0.0000 | 0.0035 | -0.0034 | -0.0034 | 0.0035 | 0.0000 | 0.0000 | 0.0035 |
| 7 | 1 | Tension PT: | 0.0000 | 0.0035 | -0.0034 | -0.0034 | 0.0035 | 0.0000 | 0.0000 | 0.0035 |
| 7 | 1 | Tension PT: | -0.0682 | -0.0549 | -0.0631 | -0.0816 | -0.0734 | 0.0000 | 0.0000 | -0.0816 |
| 7 | 1 | Add | -0.0682 | -0.0549 | -0.0630 | -0.0815 | -0.0734 | 0.0000 | 0.0000 | -0.0815 |
| 7 | 1 | Add | -0.0682 | -0.0549 | -0.0630 | -0.0815 | -0.0734 | 0.0000 | 0.0000 | -0.0815 |
| 7 | 1 | Add | -0.0682 | -0.0549 | -0.0630 | -0.0815 | -0.0734 | 0.0000 | 0.0000 | -0.0815 |
| 7 | 1 | Add | -0.0682 | -0.0549 | -0.0630 | -0.0815 | -0.0734 | 0.0000 | 0.0000 | -0.0815 |
| 7 | 1 | Add | -0.0681 | -0.0512 | -0.0666 | -0.0851 | -0.0697 | 0.0000 | 0.0000 | -0.0851 |
| 7 | 1 | Backfill to Grade: | -0.0681 | -0.0527 | -0.0651 | -0.0836 | -0.0712 | 0.0000 | 0.0000 | -0.0836 |
| 7 | 1 | Backfill to Grade: | -0.0681 | -0.0527 | -0.0651 | -0.0836 | -0.0712 | 0.0000 | 0.0000 | -0.0836 |
| 7 | 1 | Backfill to Grade: | -0.0681 | -0.0527 | -0.0651 | -0.0836 | -0.0712 | 0.0000 | 0.0000 | -0.0836 |
| 7 | 1 | Backfill to Grade: | -0.0681 | -0.0527 | -0.0650 | -0.0835 | -0.0712 | 0.0000 | 0.0000 | -0.0835 |
| 7 | 1 | Backfill to Grade: | -0.0604 | -0.0313 | -0.0434 | -0.0896 | -0.0775 | 0.0000 | 0.0000 | -0.0896 |

## RESULT : Member Stresses

| Member | Station | Result Case | (P/A) @ Centroid (kips/in²) | Normal Stress @ Point 1 (kips/in²) | Normal Stress @ Point 2 (kips/in²) | Normal Stress @ Point 3 (kips/in²) | Normal Stress @ Point 4 (kips/in²) | Normal Stress @ Point 5 | Normal Stress @ Point 6 | Max ABS Total Stress (kips/in²) |
|---|---|---|---|---|---|---|---|---|---|---|
| 7 | 1 | Backfill to Grade: | -0.0584 | -0.0246 | -0.0370 | -0.0922 | -0.0798 | 0.0000 | 0.0000 | -0.0922 |
| 7 | 1 | Pave: Pave: | -0.0604 | -0.0414 | -0.0534 | -0.0795 | -0.0675 | 0.0000 | 0.0000 | -0.0795 |
| 7 | 1 | Pave: Pave: | -0.0604 | -0.0414 | -0.0534 | -0.0795 | -0.0675 | 0.0000 | 0.0000 | -0.0795 |
| 7 | 1 | Pave: Pave: PT | -0.0604 | -0.0414 | -0.0534 | -0.0795 | -0.0675 | 0.0000 | 0.0000 | -0.0795 |
| 7 | 1 | Pave: Pave: | -0.0604 | -0.0414 | -0.0534 | -0.0795 | -0.0675 | 0.0000 | 0.0000 | -0.0795 |
| 7 | 1 | Pave: Pave: step | -0.0604 | -0.0408 | -0.0539 | -0.0801 | -0.0669 | 0.0000 | 0.0000 | -0.0801 |
| 7 | 1 | Open Bridge to | -0.0604 | -0.0427 | -0.0555 | -0.0781 | -0.0653 | 0.0000 | 0.0000 | -0.0781 |
| 7 | 1 | Open Bridge to | -0.0604 | -0.0427 | -0.0555 | -0.0781 | -0.0653 | 0.0000 | 0.0000 | -0.0781 |
| 7 | 1 | Open Bridge to | -0.0604 | -0.0427 | -0.0555 | -0.0781 | -0.0653 | 0.0000 | 0.0000 | -0.0781 |
| 7 | 1 | Open Bridge to | -0.0604 | -0.0427 | -0.0555 | -0.0781 | -0.0653 | 0.0000 | 0.0000 | -0.0781 |
| 7 | 1 | Open Bridge to | -0.0579 | -0.0318 | -0.0500 | -0.0839 | -0.0657 | 0.0000 | 0.0000 | -0.0839 |
| 7 | 1 | Open Bridge to | -0.0584 | -0.0340 | -0.0511 | -0.0828 | -0.0656 | 0.0000 | 0.0000 | -0.0828 |
| 7 | 1 | Partial Live Load | -0.0604 | -0.0440 | -0.0566 | -0.0769 | -0.0642 | 0.0000 | 0.0000 | -0.0769 |
| 7 | 1 | Partial Live Load | -0.0604 | -0.0440 | -0.0566 | -0.0769 | -0.0642 | 0.0000 | 0.0000 | -0.0769 |
| 7 | 1 | Partial Live Load | -0.0604 | -0.0440 | -0.0566 | -0.0769 | -0.0642 | 0.0000 | 0.0000 | -0.0769 |
| 7 | 1 | Partial Live Load | -0.0604 | -0.0440 | -0.0566 | -0.0769 | -0.0642 | 0.0000 | 0.0000 | -0.0769 |
| 7 | 1 | Partial Live Load | -0.0602 | -0.0429 | -0.0561 | -0.0775 | -0.0643 | 0.0000 | 0.0000 | -0.0775 |
| 7 | 1 | Remove Long | -0.0602 | -0.1107 | -0.1099 | -0.0097 | -0.0105 | 0.0000 | 0.0000 | -0.1107 |
| 7 | 1 | Remove Long | -0.0602 | -0.1107 | -0.1099 | -0.0097 | -0.0105 | 0.0000 | 0.0000 | -0.1107 |
| 7 | 1 | Remove Long | -0.0602 | -0.1107 | -0.1099 | -0.0097 | -0.0105 | 0.0000 | 0.0000 | -0.1107 |
| 7 | 1 | Remove Long | -0.0572 | -0.1082 | -0.1073 | -0.0063 | -0.0071 | 0.0000 | 0.0000 | -0.1082 |
| 7 | 1 | Remove Long | -0.0575 | -0.1093 | -0.1079 | -0.0057 | -0.0071 | 0.0000 | 0.0000 | -0.1093 |
| 7 | 1 | Long Term | -0.0575 | -0.1081 | -0.1070 | -0.0068 | -0.0080 | 0.0000 | 0.0000 | -0.1081 |
| 7 | 1 | Long Term | -0.0575 | -0.1081 | -0.1070 | -0.0068 | -0.0080 | 0.0000 | 0.0000 | -0.1081 |
| 7 | 1 | Long Term | -0.0575 | -0.1081 | -0.1070 | -0.0068 | -0.0080 | 0.0000 | 0.0000 | -0.1081 |
| 7 | 1 | Long Term | -0.0573 | -0.1080 | -0.1069 | -0.0066 | -0.0078 | 0.0000 | 0.0000 | -0.1080 |
| 7 | 1 | Long Term | -0.0553 | -0.0993 | -0.1025 | -0.0113 | -0.0081 | 0.0000 | 0.0000 | -0.1025 |
| 7 | 1 | Long Term | -0.0548 | -0.0971 | -0.1014 | -0.0124 | -0.0081 | 0.0000 | 0.0000 | -0.1014 |
| 7 | 1 | Long Term | -0.0501 | -0.0967 | -0.1094 | -0.0036 | 0.0092 | 0.0000 | 0.0000 | -0.1094 |
| 7 | 1 | Strength Check: | -0.0573 | -0.1080 | -0.1069 | -0.0066 | -0.0078 | 0.0000 | 0.0000 | -0.1080 |
| 7 | 1 | Strength Check: | -0.0573 | -0.1080 | -0.1069 | -0.0066 | -0.0078 | 0.0000 | 0.0000 | -0.1080 |
| 7 | 1 | Strength Check: | -0.0573 | -0.1080 | -0.1069 | -0.0066 | -0.0078 | 0.0000 | 0.0000 | -0.1080 |
| 7 | 1 | Strength Check: | -0.0573 | -0.1080 | -0.1069 | -0.0066 | -0.0078 | 0.0000 | 0.0000 | -0.1080 |
| 7 | 1 | Strength Check: | 0.0078 | -0.0523 | -0.0500 | 0.0678 | 0.0655 | 0.0000 | 0.0000 | 0.0678 |

## RESULT : Member Stresses

| Member | Station | Result Case | (P/A) @ Centroid (kips/in²) | Normal Stress @ Point 1 (kips/in²) | Normal Stress @ Point 2 (kips/in²) | Normal Stress @ Point 3 (kips/in²) | Normal Stress @ Point 4 (kips/in²) | Normal Stress @ Point 5 | Normal Stress @ Point 6 | Max ABS Total Stress (kips/in²) |
|---|---|---|---|---|---|---|---|---|---|---|
| 7 | 1 | Strength Check: | -0.0501 | -0.0967 | -0.1094 | -0.0036 | 0.0092 | 0.0000 | 0.0000 | -0.1094 |
| 7 | 2 | Set Precast In | 0.0000 | 0.0000 | 0.0000 | 0.0000 | 0.0000 | 0.0000 | 0.0000 | 0.0000 |
| 7 | 2 | Set Precast In | 0.0000 | 0.0071 | -0.0071 | -0.0071 | 0.0071 | 0.0000 | 0.0000 | 0.0071 |
| 7 | 2 | Tension PT: | 0.0000 | 0.0065 | -0.0064 | -0.0064 | 0.0065 | 0.0000 | 0.0000 | 0.0065 |
| 7 | 2 | Tension PT: | 0.0000 | 0.0065 | -0.0064 | -0.0064 | 0.0065 | 0.0000 | 0.0000 | 0.0065 |
| 7 | 2 | Tension PT: | 0.0000 | 0.0065 | -0.0064 | -0.0064 | 0.0065 | 0.0000 | 0.0000 | 0.0065 |
| 7 | 2 | Tension PT: | 0.0000 | 0.0065 | -0.0064 | -0.0064 | 0.0065 | 0.0000 | 0.0000 | 0.0065 |
| 7 | 2 | Tension PT: | -0.0680 | -0.0460 | -0.0603 | -0.0899 | -0.0756 | 0.0000 | 0.0000 | -0.0899 |
| 7 | 2 | Add | -0.0680 | -0.0460 | -0.0602 | -0.0899 | -0.0757 | 0.0000 | 0.0000 | -0.0899 |
| 7 | 2 | Add | -0.0680 | -0.0460 | -0.0602 | -0.0899 | -0.0757 | 0.0000 | 0.0000 | -0.0899 |
| 7 | 2 | Add | -0.0680 | -0.0460 | -0.0602 | -0.0899 | -0.0757 | 0.0000 | 0.0000 | -0.0899 |
| 7 | 2 | Add | -0.0679 | -0.0460 | -0.0602 | -0.0899 | -0.0756 | 0.0000 | 0.0000 | -0.0899 |
| 7 | 2 | Add | -0.0679 | -0.0375 | -0.0686 | -0.0983 | -0.0671 | 0.0000 | 0.0000 | -0.0983 |
| 7 | 2 | Backfill to Grade: | -0.0679 | -0.0390 | -0.0671 | -0.0967 | -0.0687 | 0.0000 | 0.0000 | -0.0967 |
| 7 | 2 | Backfill to Grade: | -0.0679 | -0.0390 | -0.0671 | -0.0967 | -0.0687 | 0.0000 | 0.0000 | -0.0967 |
| 7 | 2 | Backfill to Grade: | -0.0679 | -0.0390 | -0.0671 | -0.0967 | -0.0687 | 0.0000 | 0.0000 | -0.0967 |
| 7 | 2 | Backfill to Grade: | -0.0678 | -0.0390 | -0.0670 | -0.0967 | -0.0686 | 0.0000 | 0.0000 | -0.0967 |
| 7 | 2 | Backfill to Grade: | -0.0602 | -0.0193 | -0.0472 | -0.1010 | -0.0732 | 0.0000 | 0.0000 | -0.1010 |
| 7 | 2 | Backfill to Grade: | -0.0581 | -0.0126 | -0.0407 | -0.1037 | -0.0755 | 0.0000 | 0.0000 | -0.1037 |
| 7 | 2 | Pave: Pave: | -0.0602 | -0.0318 | -0.0595 | -0.0885 | -0.0608 | 0.0000 | 0.0000 | -0.0885 |
| 7 | 2 | Pave: Pave: | -0.0602 | -0.0318 | -0.0595 | -0.0885 | -0.0608 | 0.0000 | 0.0000 | -0.0885 |
| 7 | 2 | Pave: Pave: PT | -0.0602 | -0.0318 | -0.0595 | -0.0885 | -0.0608 | 0.0000 | 0.0000 | -0.0885 |
| 7 | 2 | Pave: Pave: | -0.0602 | -0.0318 | -0.0596 | -0.0885 | -0.0608 | 0.0000 | 0.0000 | -0.0885 |
| 7 | 2 | Pave: Pave: step | -0.0602 | -0.0305 | -0.0608 | -0.0898 | -0.0595 | 0.0000 | 0.0000 | -0.0898 |
| 7 | 2 | Open Bridge to | -0.0602 | -0.0329 | -0.0628 | -0.0874 | -0.0575 | 0.0000 | 0.0000 | -0.0874 |
| 7 | 2 | Open Bridge to | -0.0602 | -0.0329 | -0.0628 | -0.0874 | -0.0575 | 0.0000 | 0.0000 | -0.0874 |
| 7 | 2 | Open Bridge to | -0.0602 | -0.0329 | -0.0628 | -0.0874 | -0.0575 | 0.0000 | 0.0000 | -0.0874 |
| 7 | 2 | Open Bridge to | -0.0602 | -0.0329 | -0.0628 | -0.0874 | -0.0575 | 0.0000 | 0.0000 | -0.0874 |
| 7 | 2 | Open Bridge to | -0.0576 | -0.0186 | -0.0606 | -0.0966 | -0.0546 | 0.0000 | 0.0000 | -0.0966 |
| 7 | 2 | Open Bridge to | -0.0581 | -0.0214 | -0.0610 | -0.0948 | -0.0552 | 0.0000 | 0.0000 | -0.0948 |
| 7 | 2 | Partial Live Load | -0.0602 | -0.0344 | -0.0642 | -0.0859 | -0.0561 | 0.0000 | 0.0000 | -0.0859 |
| 7 | 2 | Partial Live Load | -0.0602 | -0.0344 | -0.0642 | -0.0859 | -0.0561 | 0.0000 | 0.0000 | -0.0859 |
| 7 | 2 | Partial Live Load | -0.0602 | -0.0344 | -0.0642 | -0.0859 | -0.0561 | 0.0000 | 0.0000 | -0.0859 |
| 7 | 2 | Partial Live Load | -0.0602 | -0.0344 | -0.0642 | -0.0859 | -0.0561 | 0.0000 | 0.0000 | -0.0859 |

## RESULT : Member Stresses

| Member | Station | Result Case | (P/A) @ Centroid (kips/in²) | Normal Stress @ Point 1 (kips/in²) | Normal Stress @ Point 2 (kips/in²) | Normal Stress @ Point 3 (kips/in²) | Normal Stress @ Point 4 (kips/in²) | Normal Stress @ Point 5 | Normal Stress @ Point 6 | Max ABS Total Stress (kips/in²) |
|---|---|---|---|---|---|---|---|---|---|---|
| 7 | 2 | Partial Live Load | -0.0599 | -0.0330 | -0.0640 | -0.0868 | -0.0558 | 0.0000 | 0.0000 | -0.0868 |
| 7 | 2 | Remove Long | -0.0599 | -0.1154 | -0.1324 | -0.0044 | 0.0126 | 0.0000 | 0.0000 | -0.1324 |
| 7 | 2 | Remove Long | -0.0599 | -0.1154 | -0.1324 | -0.0044 | 0.0126 | 0.0000 | 0.0000 | -0.1324 |
| 7 | 2 | Remove Long | -0.0599 | -0.1154 | -0.1324 | -0.0044 | 0.0126 | 0.0000 | 0.0000 | -0.1324 |
| 7 | 2 | Remove Long | -0.0570 | -0.1132 | -0.1301 | -0.0008 | 0.0161 | 0.0000 | 0.0000 | -0.1301 |
| 7 | 2 | Remove Long | -0.0572 | -0.1146 | -0.1303 | 0.0001 | 0.0158 | 0.0000 | 0.0000 | -0.1303 |
| 7 | 2 | Long Term | -0.0572 | -0.1132 | -0.1292 | -0.0012 | 0.0147 | 0.0000 | 0.0000 | -0.1292 |
| 7 | 2 | Long Term | -0.0572 | -0.1132 | -0.1292 | -0.0012 | 0.0147 | 0.0000 | 0.0000 | -0.1292 |
| 7 | 2 | Long Term | -0.0572 | -0.1132 | -0.1292 | -0.0012 | 0.0147 | 0.0000 | 0.0000 | -0.1292 |
| 7 | 2 | Long Term | -0.0571 | -0.1131 | -0.1290 | -0.0010 | 0.0149 | 0.0000 | 0.0000 | -0.1290 |
| 7 | 2 | Long Term | -0.0550 | -0.1016 | -0.1273 | -0.0084 | 0.0173 | 0.0000 | 0.0000 | -0.1273 |
| 7 | 2 | Long Term | -0.0545 | -0.0988 | -0.1268 | -0.0102 | 0.0178 | 0.0000 | 0.0000 | -0.1268 |
| 7 | 2 | Long Term | -0.0498 | -0.0987 | -0.1448 | -0.0010 | 0.0451 | 0.0000 | 0.0000 | -0.1448 |
| 7 | 2 | Strength Check: | -0.0571 | -0.1131 | -0.1290 | -0.0010 | 0.0149 | 0.0000 | 0.0000 | -0.1290 |
| 7 | 2 | Strength Check: | -0.0571 | -0.1131 | -0.1290 | -0.0010 | 0.0149 | 0.0000 | 0.0000 | -0.1290 |
| 7 | 2 | Strength Check: | -0.0571 | -0.1131 | -0.1290 | -0.0010 | 0.0149 | 0.0000 | 0.0000 | -0.1290 |
| 7 | 2 | Strength Check: | -0.0571 | -0.1131 | -0.1290 | -0.0010 | 0.0149 | 0.0000 | 0.0000 | -0.1290 |
| 7 | 2 | Strength Check: | 0.0078 | -0.0631 | -0.0776 | 0.0786 | 0.0932 | 0.0000 | 0.0000 | 0.0932 |
| 7 | 2 | Strength Check: | -0.0498 | -0.0987 | -0.1448 | -0.0010 | 0.0451 | 0.0000 | 0.0000 | -0.1448 |
| 8 | 0 | Set Precast In | 0.0000 | 0.0000 | 0.0000 | 0.0000 | 0.0000 | 0.0000 | 0.0000 | 0.0000 |
| 8 | 0 | Set Precast In | 0.0000 | 0.0071 | -0.0071 | -0.0071 | 0.0071 | 0.0000 | 0.0000 | 0.0071 |
| 8 | 0 | Tension PT: | 0.0000 | 0.0064 | -0.0064 | -0.0064 | 0.0064 | 0.0000 | 0.0000 | 0.0064 |
| 8 | 0 | Tension PT: | 0.0000 | 0.0064 | -0.0064 | -0.0064 | 0.0064 | 0.0000 | 0.0000 | 0.0064 |
| 8 | 0 | Tension PT: | 0.0000 | 0.0064 | -0.0064 | -0.0064 | 0.0064 | 0.0000 | 0.0000 | 0.0064 |
| 8 | 0 | Tension PT: | 0.0000 | 0.0064 | -0.0064 | -0.0064 | 0.0064 | 0.0000 | 0.0000 | 0.0064 |
| 8 | 0 | Tension PT: | -0.0680 | -0.0460 | -0.0603 | -0.0899 | -0.0756 | 0.0000 | 0.0000 | -0.0899 |
| 8 | 0 | Add | -0.0680 | -0.0460 | -0.0602 | -0.0899 | -0.0757 | 0.0000 | 0.0000 | -0.0899 |
| 8 | 0 | Add | -0.0680 | -0.0460 | -0.0602 | -0.0899 | -0.0757 | 0.0000 | 0.0000 | -0.0899 |
| 8 | 0 | Add | -0.0680 | -0.0460 | -0.0602 | -0.0899 | -0.0757 | 0.0000 | 0.0000 | -0.0899 |
| 8 | 0 | Add | -0.0679 | -0.0460 | -0.0602 | -0.0899 | -0.0756 | 0.0000 | 0.0000 | -0.0899 |
| 8 | 0 | Add | -0.0680 | -0.0376 | -0.0687 | -0.0984 | -0.0672 | 0.0000 | 0.0000 | -0.0984 |
| 8 | 0 | Backfill to Grade: | -0.0680 | -0.0391 | -0.0672 | -0.0968 | -0.0688 | 0.0000 | 0.0000 | -0.0968 |
| 8 | 0 | Backfill to Grade: | -0.0680 | -0.0391 | -0.0672 | -0.0968 | -0.0688 | 0.0000 | 0.0000 | -0.0968 |
| 8 | 0 | Backfill to Grade: | -0.0680 | -0.0391 | -0.0672 | -0.0968 | -0.0688 | 0.0000 | 0.0000 | -0.0968 |

## RESULT : Member Stresses

| Member | Station | Result Case | (P/A) @ Centroid (kips/in²) | Normal Stress @ Point 1 (kips/in²) | Normal Stress @ Point 2 (kips/in²) | Normal Stress @ Point 3 (kips/in²) | Normal Stress @ Point 4 (kips/in²) | Normal Stress @ Point 5 | Normal Stress @ Point 6 | Max ABS Total Stress (kips/in²) |
|---|---|---|---|---|---|---|---|---|---|---|
| 8 | 0 | Backfill to Grade: | -0.0679 | -0.0391 | -0.0671 | -0.0968 | -0.0687 | 0.0000 | 0.0000 | -0.0968 |
| 8 | 0 | Backfill to Grade: | -0.0603 | -0.0201 | -0.0479 | -0.1004 | -0.0726 | 0.0000 | 0.0000 | -0.1004 |
| 8 | 0 | Backfill to Grade: | -0.0582 | -0.0133 | -0.0415 | -0.1031 | -0.0750 | 0.0000 | 0.0000 | -0.1031 |
| 8 | 0 | Pave: Pave: | -0.0603 | -0.0326 | -0.0603 | -0.0880 | -0.0602 | 0.0000 | 0.0000 | -0.0880 |
| 8 | 0 | Pave: Pave: | -0.0603 | -0.0326 | -0.0603 | -0.0880 | -0.0602 | 0.0000 | 0.0000 | -0.0880 |
| 8 | 0 | Pave: Pave: PT | -0.0603 | -0.0326 | -0.0603 | -0.0880 | -0.0602 | 0.0000 | 0.0000 | -0.0880 |
| 8 | 0 | Pave: Pave: | -0.0603 | -0.0326 | -0.0603 | -0.0880 | -0.0602 | 0.0000 | 0.0000 | -0.0880 |
| 8 | 0 | Pave: Pave: step | -0.0603 | -0.0313 | -0.0616 | -0.0892 | -0.0590 | 0.0000 | 0.0000 | -0.0892 |
| 8 | 0 | Open Bridge to | -0.0603 | -0.0337 | -0.0636 | -0.0869 | -0.0570 | 0.0000 | 0.0000 | -0.0869 |
| 8 | 0 | Open Bridge to | -0.0603 | -0.0337 | -0.0636 | -0.0869 | -0.0570 | 0.0000 | 0.0000 | -0.0869 |
| 8 | 0 | Open Bridge to | -0.0603 | -0.0337 | -0.0636 | -0.0869 | -0.0570 | 0.0000 | 0.0000 | -0.0869 |
| 8 | 0 | Open Bridge to | -0.0603 | -0.0337 | -0.0636 | -0.0869 | -0.0570 | 0.0000 | 0.0000 | -0.0869 |
| 8 | 0 | Open Bridge to | -0.0578 | -0.0194 | -0.0614 | -0.0961 | -0.0541 | 0.0000 | 0.0000 | -0.0961 |
| 8 | 0 | Open Bridge to | -0.0583 | -0.0222 | -0.0618 | -0.0943 | -0.0547 | 0.0000 | 0.0000 | -0.0943 |
| 8 | 0 | Partial Live Load | -0.0603 | -0.0352 | -0.0650 | -0.0854 | -0.0556 | 0.0000 | 0.0000 | -0.0854 |
| 8 | 0 | Partial Live Load | -0.0603 | -0.0352 | -0.0650 | -0.0854 | -0.0556 | 0.0000 | 0.0000 | -0.0854 |
| 8 | 0 | Partial Live Load | -0.0603 | -0.0352 | -0.0650 | -0.0854 | -0.0556 | 0.0000 | 0.0000 | -0.0854 |
| 8 | 0 | Partial Live Load | -0.0603 | -0.0352 | -0.0650 | -0.0854 | -0.0556 | 0.0000 | 0.0000 | -0.0854 |
| 8 | 0 | Partial Live Load | -0.0600 | -0.0338 | -0.0648 | -0.0863 | -0.0553 | 0.0000 | 0.0000 | -0.0863 |
| 8 | 0 | Remove Long | -0.0600 | -0.1162 | -0.1331 | -0.0038 | 0.0131 | 0.0000 | 0.0000 | -0.1331 |
| 8 | 0 | Remove Long | -0.0600 | -0.1162 | -0.1331 | -0.0038 | 0.0131 | 0.0000 | 0.0000 | -0.1331 |
| 8 | 0 | Remove Long | -0.0600 | -0.1162 | -0.1331 | -0.0038 | 0.0131 | 0.0000 | 0.0000 | -0.1331 |
| 8 | 0 | Remove Long | -0.0571 | -0.1139 | -0.1308 | -0.0002 | 0.0167 | 0.0000 | 0.0000 | -0.1308 |
| 8 | 0 | Remove Long | -0.0573 | -0.1154 | -0.1311 | 0.0007 | 0.0164 | 0.0000 | 0.0000 | -0.1311 |
| 8 | 0 | Long Term | -0.0573 | -0.1140 | -0.1299 | -0.0007 | 0.0153 | 0.0000 | 0.0000 | -0.1299 |
| 8 | 0 | Long Term | -0.0573 | -0.1140 | -0.1299 | -0.0007 | 0.0153 | 0.0000 | 0.0000 | -0.1299 |
| 8 | 0 | Long Term | -0.0573 | -0.1140 | -0.1299 | -0.0007 | 0.0153 | 0.0000 | 0.0000 | -0.1299 |
| 8 | 0 | Long Term | -0.0572 | -0.1138 | -0.1298 | -0.0005 | 0.0155 | 0.0000 | 0.0000 | -0.1298 |
| 8 | 0 | Long Term | -0.0552 | -0.1024 | -0.1281 | -0.0079 | 0.0177 | 0.0000 | 0.0000 | -0.1281 |
| 8 | 0 | Long Term | -0.0547 | -0.0996 | -0.1276 | -0.0097 | 0.0183 | 0.0000 | 0.0000 | -0.1276 |
| 8 | 0 | Long Term | -0.0501 | -0.0996 | -0.1456 | -0.0006 | 0.0455 | 0.0000 | 0.0000 | -0.1456 |
| 8 | 0 | Strength Check: | -0.0572 | -0.1138 | -0.1298 | -0.0005 | 0.0155 | 0.0000 | 0.0000 | -0.1298 |
| 8 | 0 | Strength Check: | -0.0572 | -0.1138 | -0.1298 | -0.0005 | 0.0155 | 0.0000 | 0.0000 | -0.1298 |
| 8 | 0 | Strength Check: | -0.0572 | -0.1138 | -0.1298 | -0.0005 | 0.0155 | 0.0000 | 0.0000 | -0.1298 |

## RESULT : Member Stresses

| Member | Station | Result Case | (P/A) @ Centroid (kips/in²) | Normal Stress @ Point 1 (kips/in²) | Normal Stress @ Point 2 (kips/in²) | Normal Stress @ Point 3 (kips/in²) | Normal Stress @ Point 4 (kips/in²) | Normal Stress @ Point 5 | Normal Stress @ Point 6 | Max ABS Total Stress (kips/in²) |
|---|---|---|---|---|---|---|---|---|---|---|
| 8 | 0 | Strength Check: | -0.0572 | -0.1138 | -0.1298 | -0.0005 | 0.0155 | 0.0000 | 0.0000 | -0.1298 |
| 8 | 0 | Strength Check: | 0.0077 | -0.0638 | -0.0784 | 0.0791 | 0.0937 | 0.0000 | 0.0000 | 0.0937 |
| 8 | 0 | Strength Check: | -0.0501 | -0.0996 | -0.1456 | -0.0006 | 0.0455 | 0.0000 | 0.0000 | -0.1456 |
| 8 | 1 | Set Precast In | 0.0000 | 0.0000 | 0.0000 | 0.0000 | 0.0000 | 0.0000 | 0.0000 | 0.0000 |
| 8 | 1 | Set Precast In | 0.0000 | 0.0197 | -0.0196 | -0.0196 | 0.0197 | 0.0000 | 0.0000 | 0.0197 |
| 8 | 1 | Tension PT: | 0.0000 | 0.0193 | -0.0192 | -0.0192 | 0.0193 | 0.0000 | 0.0000 | 0.0193 |
| 8 | 1 | Tension PT: | 0.0000 | 0.0193 | -0.0192 | -0.0192 | 0.0193 | 0.0000 | 0.0000 | 0.0193 |
| 8 | 1 | Tension PT: | 0.0000 | 0.0193 | -0.0192 | -0.0192 | 0.0193 | 0.0000 | 0.0000 | 0.0193 |
| 8 | 1 | Tension PT: | 0.0000 | 0.0193 | -0.0192 | -0.0192 | 0.0193 | 0.0000 | 0.0000 | 0.0193 |
| 8 | 1 | Tension PT: | -0.0666 | -0.0695 | -0.1192 | -0.0637 | -0.0140 | 0.0000 | 0.0000 | -0.1192 |
| 8 | 1 | Add | -0.0666 | -0.0695 | -0.1192 | -0.0637 | -0.0141 | 0.0000 | 0.0000 | -0.1192 |
| 8 | 1 | Add | -0.0666 | -0.0695 | -0.1192 | -0.0637 | -0.0141 | 0.0000 | 0.0000 | -0.1192 |
| 8 | 1 | Add | -0.0666 | -0.0695 | -0.1192 | -0.0637 | -0.0141 | 0.0000 | 0.0000 | -0.1192 |
| 8 | 1 | Add | -0.0666 | -0.0695 | -0.1191 | -0.0637 | -0.0140 | 0.0000 | 0.0000 | -0.1191 |
| 8 | 1 | Add | -0.0666 | -0.0652 | -0.1234 | -0.0679 | -0.0098 | 0.0000 | 0.0000 | -0.1234 |
| 8 | 1 | Backfill to Grade: | -0.0666 | -0.0659 | -0.1226 | -0.0672 | -0.0105 | 0.0000 | 0.0000 | -0.1226 |
| 8 | 1 | Backfill to Grade: | -0.0666 | -0.0659 | -0.1226 | -0.0672 | -0.0105 | 0.0000 | 0.0000 | -0.1226 |
| 8 | 1 | Backfill to Grade: | -0.0666 | -0.0659 | -0.1226 | -0.0672 | -0.0105 | 0.0000 | 0.0000 | -0.1226 |
| 8 | 1 | Backfill to Grade: | -0.0665 | -0.0659 | -0.1225 | -0.0672 | -0.0105 | 0.0000 | 0.0000 | -0.1225 |
| 8 | 1 | Backfill to Grade: | -0.0589 | -0.0287 | -0.0837 | -0.0891 | -0.0341 | 0.0000 | 0.0000 | -0.0891 |
| 8 | 1 | Backfill to Grade: | -0.0569 | -0.0177 | -0.0753 | -0.0961 | -0.0384 | 0.0000 | 0.0000 | -0.0961 |
| 8 | 1 | Pave: Pave: | -0.0589 | -0.0349 | -0.0899 | -0.0829 | -0.0279 | 0.0000 | 0.0000 | -0.0899 |
| 8 | 1 | Pave: Pave: | -0.0589 | -0.0349 | -0.0899 | -0.0829 | -0.0279 | 0.0000 | 0.0000 | -0.0899 |
| 8 | 1 | Pave: Pave: PT | -0.0589 | -0.0349 | -0.0899 | -0.0829 | -0.0279 | 0.0000 | 0.0000 | -0.0899 |
| 8 | 1 | Pave: Pave: | -0.0589 | -0.0349 | -0.0899 | -0.0829 | -0.0279 | 0.0000 | 0.0000 | -0.0899 |
| 8 | 1 | Pave: Pave: step | -0.0589 | -0.0343 | -0.0905 | -0.0836 | -0.0273 | 0.0000 | 0.0000 | -0.0905 |
| 8 | 1 | Open Bridge to | -0.0589 | -0.0355 | -0.0915 | -0.0824 | -0.0263 | 0.0000 | 0.0000 | -0.0915 |
| 8 | 1 | Open Bridge to | -0.0589 | -0.0355 | -0.0915 | -0.0824 | -0.0263 | 0.0000 | 0.0000 | -0.0915 |
| 8 | 1 | Open Bridge to | -0.0589 | -0.0355 | -0.0915 | -0.0824 | -0.0263 | 0.0000 | 0.0000 | -0.0915 |
| 8 | 1 | Open Bridge to | -0.0589 | -0.0355 | -0.0915 | -0.0824 | -0.0263 | 0.0000 | 0.0000 | -0.0915 |
| 8 | 1 | Open Bridge to | -0.0564 | -0.0188 | -0.0840 | -0.0940 | -0.0288 | 0.0000 | 0.0000 | -0.0940 |
| 8 | 1 | Open Bridge to | -0.0569 | -0.0221 | -0.0855 | -0.0917 | -0.0283 | 0.0000 | 0.0000 | -0.0917 |
| 8 | 1 | Partial Live Load | -0.0589 | -0.0362 | -0.0922 | -0.0816 | -0.0256 | 0.0000 | 0.0000 | -0.0922 |
| 8 | 1 | Partial Live Load | -0.0589 | -0.0362 | -0.0922 | -0.0816 | -0.0256 | 0.0000 | 0.0000 | -0.0922 |

## RESULT : Member Stresses

| Member | Station | Result Case | (P/A) @ Centroid (kips/in²) | Normal Stress @ Point 1 (kips/in²) | Normal Stress @ Point 2 (kips/in²) | Normal Stress @ Point 3 (kips/in²) | Normal Stress @ Point 4 (kips/in²) | Normal Stress @ Point 5 | Normal Stress @ Point 6 | Max ABS Total Stress (kips/in²) |
|---|---|---|---|---|---|---|---|---|---|---|
| 8 | 1 | Partial Live Load | -0.0589 | -0.0362 | -0.0922 | -0.0816 | -0.0256 | 0.0000 | 0.0000 | -0.0922 |
| 8 | 1 | Partial Live Load | -0.0589 | -0.0362 | -0.0922 | -0.0816 | -0.0256 | 0.0000 | 0.0000 | -0.0922 |
| 8 | 1 | Partial Live Load | -0.0587 | -0.0345 | -0.0915 | -0.0828 | -0.0259 | 0.0000 | 0.0000 | -0.0915 |
| 8 | 1 | Remove Long | -0.0587 | -0.0754 | -0.1254 | -0.0419 | 0.0081 | 0.0000 | 0.0000 | -0.1254 |
| 8 | 1 | Remove Long | -0.0587 | -0.0754 | -0.1254 | -0.0419 | 0.0081 | 0.0000 | 0.0000 | -0.1254 |
| 8 | 1 | Remove Long | -0.0587 | -0.0754 | -0.1254 | -0.0419 | 0.0081 | 0.0000 | 0.0000 | -0.1254 |
| 8 | 1 | Remove Long | -0.0557 | -0.0715 | -0.1211 | -0.0400 | 0.0096 | 0.0000 | 0.0000 | -0.1211 |
| 8 | 1 | Remove Long | -0.0560 | -0.0732 | -0.1218 | -0.0388 | 0.0098 | 0.0000 | 0.0000 | -0.1218 |
| 8 | 1 | Long Term | -0.0560 | -0.0725 | -0.1213 | -0.0395 | 0.0093 | 0.0000 | 0.0000 | -0.1213 |
| 8 | 1 | Long Term | -0.0560 | -0.0725 | -0.1213 | -0.0395 | 0.0093 | 0.0000 | 0.0000 | -0.1213 |
| 8 | 1 | Long Term | -0.0560 | -0.0725 | -0.1213 | -0.0395 | 0.0093 | 0.0000 | 0.0000 | -0.1213 |
| 8 | 1 | Long Term | -0.0558 | -0.0723 | -0.1210 | -0.0394 | 0.0093 | 0.0000 | 0.0000 | -0.1210 |
| 8 | 1 | Long Term | -0.0538 | -0.0589 | -0.1149 | -0.0487 | 0.0073 | 0.0000 | 0.0000 | -0.1149 |
| 8 | 1 | Long Term | -0.0533 | -0.0556 | -0.1134 | -0.0510 | 0.0068 | 0.0000 | 0.0000 | -0.1134 |
| 8 | 1 | Long Term | -0.0487 | -0.0162 | -0.0929 | -0.0812 | -0.0045 | 0.0000 | 0.0000 | -0.0929 |
| 8 | 1 | Strength Check: | -0.0558 | -0.0723 | -0.1210 | -0.0394 | 0.0093 | 0.0000 | 0.0000 | -0.1210 |
| 8 | 1 | Strength Check: | -0.0558 | -0.0723 | -0.1210 | -0.0394 | 0.0093 | 0.0000 | 0.0000 | -0.1210 |
| 8 | 1 | Strength Check: | -0.0558 | -0.0723 | -0.1210 | -0.0394 | 0.0093 | 0.0000 | 0.0000 | -0.1210 |
| 8 | 1 | Strength Check: | -0.0558 | -0.0723 | -0.1210 | -0.0394 | 0.0093 | 0.0000 | 0.0000 | -0.1210 |
| 8 | 1 | Strength Check: | 0.0077 | 0.0123 | -0.0258 | 0.0030 | 0.0412 | 0.0000 | 0.0000 | 0.0412 |
| 8 | 1 | Strength Check: | -0.0487 | -0.0162 | -0.0929 | -0.0812 | -0.0045 | 0.0000 | 0.0000 | -0.0929 |
| 8 | 2 | Set Precast In | 0.0000 | 0.0000 | 0.0000 | 0.0000 | 0.0000 | 0.0000 | 0.0000 | 0.0000 |
| 8 | 2 | Set Precast In | 0.0001 | 0.0444 | -0.0442 | -0.0442 | 0.0444 | 0.0000 | 0.0000 | 0.0444 |
| 8 | 2 | Tension PT: | 0.0001 | 0.0444 | -0.0442 | -0.0442 | 0.0444 | 0.0000 | 0.0000 | 0.0444 |
| 8 | 2 | Tension PT: | 0.0001 | 0.0444 | -0.0442 | -0.0442 | 0.0444 | 0.0000 | 0.0000 | 0.0444 |
| 8 | 2 | Tension PT: | 0.0001 | 0.0444 | -0.0442 | -0.0442 | 0.0444 | 0.0000 | 0.0000 | 0.0444 |
| 8 | 2 | Tension PT: | 0.0001 | 0.0444 | -0.0442 | -0.0442 | 0.0444 | 0.0000 | 0.0000 | 0.0444 |
| 8 | 2 | Tension PT: | -0.0654 | -0.0808 | -0.1899 | -0.0499 | 0.0592 | 0.0000 | 0.0000 | -0.1899 |
| 8 | 2 | Add | -0.0654 | -0.0808 | -0.1899 | -0.0499 | 0.0592 | 0.0000 | 0.0000 | -0.1899 |
| 8 | 2 | Add | -0.0654 | -0.0808 | -0.1899 | -0.0499 | 0.0592 | 0.0000 | 0.0000 | -0.1899 |
| 8 | 2 | Add | -0.0654 | -0.0808 | -0.1899 | -0.0499 | 0.0592 | 0.0000 | 0.0000 | -0.1899 |
| 8 | 2 | Add | -0.0653 | -0.0807 | -0.1899 | -0.0499 | 0.0592 | 0.0000 | 0.0000 | -0.1899 |
| 8 | 2 | Add | -0.0653 | -0.0589 | -0.2116 | -0.0716 | 0.0811 | 0.0000 | 0.0000 | -0.2116 |
| 8 | 2 | Backfill to Grade: | -0.0652 | -0.0589 | -0.2116 | -0.0716 | 0.0811 | 0.0000 | 0.0000 | -0.2116 |

## RESULT : Member Stresses

| Member | Station | Result Case | (P/A) @ Centroid (kips/in²) | Normal Stress @ Point 1 (kips/in²) | Normal Stress @ Point 2 (kips/in²) | Normal Stress @ Point 3 (kips/in²) | Normal Stress @ Point 4 (kips/in²) | Normal Stress @ Point 5 | Normal Stress @ Point 6 | Max ABS Total Stress (kips/in²) |
|---|---|---|---|---|---|---|---|---|---|---|
| 8 | 2 | Backfill to Grade: | -0.0652 | -0.0589 | -0.2116 | -0.0716 | 0.0811 | 0.0000 | 0.0000 | -0.2116 |
| 8 | 2 | Backfill to Grade: | -0.0652 | -0.0589 | -0.2116 | -0.0716 | 0.0811 | 0.0000 | 0.0000 | -0.2116 |
| 8 | 2 | Backfill to Grade: | -0.0652 | -0.0588 | -0.2115 | -0.0716 | 0.0811 | 0.0000 | 0.0000 | -0.2115 |
| 8 | 2 | Backfill to Grade: | -0.0576 | 0.2287 | 0.0790 | -0.3440 | -0.1943 | 0.0000 | 0.0000 | -0.3440 |
| 8 | 2 | Backfill to Grade: | -0.0556 | 0.3133 | 0.1587 | -0.4246 | -0.2700 | 0.0000 | 0.0000 | -0.4246 |
| 8 | 2 | Pave: Pave: | -0.0576 | 0.2287 | 0.0790 | -0.3440 | -0.1943 | 0.0000 | 0.0000 | -0.3440 |
| 8 | 2 | Pave: Pave: | -0.0576 | 0.2287 | 0.0790 | -0.3440 | -0.1943 | 0.0000 | 0.0000 | -0.3440 |
| 8 | 2 | Pave: Pave: PT | -0.0576 | 0.2287 | 0.0790 | -0.3440 | -0.1943 | 0.0000 | 0.0000 | -0.3440 |
| 8 | 2 | Pave: Pave: | -0.0577 | 0.2287 | 0.0789 | -0.3440 | -0.1943 | 0.0000 | 0.0000 | -0.3440 |
| 8 | 2 | Pave: Pave: step | -0.0577 | 0.2319 | 0.0757 | -0.3472 | -0.1910 | 0.0000 | 0.0000 | -0.3472 |
| 8 | 2 | Open Bridge to | -0.0577 | 0.2319 | 0.0757 | -0.3472 | -0.1910 | 0.0000 | 0.0000 | -0.3472 |
| 8 | 2 | Open Bridge to | -0.0577 | 0.2319 | 0.0757 | -0.3472 | -0.1910 | 0.0000 | 0.0000 | -0.3472 |
| 8 | 2 | Open Bridge to | -0.0577 | 0.2319 | 0.0757 | -0.3472 | -0.1910 | 0.0000 | 0.0000 | -0.3472 |
| 8 | 2 | Open Bridge to | -0.0577 | 0.2319 | 0.0757 | -0.3472 | -0.1910 | 0.0000 | 0.0000 | -0.3472 |
| 8 | 2 | Open Bridge to | -0.0551 | 0.3527 | 0.1604 | -0.4629 | -0.2706 | 0.0000 | 0.0000 | -0.4629 |
| 8 | 2 | Open Bridge to | -0.0556 | 0.3285 | 0.1435 | -0.4397 | -0.2547 | 0.0000 | 0.0000 | -0.4397 |
| 8 | 2 | Partial Live Load | -0.0577 | 0.2319 | 0.0757 | -0.3472 | -0.1910 | 0.0000 | 0.0000 | -0.3472 |
| 8 | 2 | Partial Live Load | -0.0577 | 0.2319 | 0.0757 | -0.3472 | -0.1910 | 0.0000 | 0.0000 | -0.3472 |
| 8 | 2 | Partial Live Load | -0.0577 | 0.2319 | 0.0757 | -0.3472 | -0.1910 | 0.0000 | 0.0000 | -0.3472 |
| 8 | 2 | Partial Live Load | -0.0576 | 0.2319 | 0.0757 | -0.3472 | -0.1910 | 0.0000 | 0.0000 | -0.3472 |
| 8 | 2 | Partial Live Load | -0.0574 | 0.2440 | 0.0842 | -0.3588 | -0.1990 | 0.0000 | 0.0000 | -0.3588 |
| 8 | 2 | Remove Long | -0.0574 | 0.2440 | 0.0842 | -0.3588 | -0.1990 | 0.0000 | 0.0000 | -0.3588 |
| 8 | 2 | Remove Long | -0.0574 | 0.2440 | 0.0842 | -0.3588 | -0.1990 | 0.0000 | 0.0000 | -0.3588 |
| 8 | 2 | Remove Long | -0.0574 | 0.2440 | 0.0842 | -0.3588 | -0.1990 | 0.0000 | 0.0000 | -0.3588 |
| 8 | 2 | Remove Long | -0.0545 | 0.2495 | 0.0906 | -0.3585 | -0.1996 | 0.0000 | 0.0000 | -0.3585 |
| 8 | 2 | Remove Long | -0.0548 | 0.2374 | 0.0821 | -0.3469 | -0.1917 | 0.0000 | 0.0000 | -0.3469 |
| 8 | 2 | Long Term | -0.0548 | 0.2374 | 0.0821 | -0.3469 | -0.1917 | 0.0000 | 0.0000 | -0.3469 |
| 8 | 2 | Long Term | -0.0548 | 0.2374 | 0.0821 | -0.3469 | -0.1917 | 0.0000 | 0.0000 | -0.3469 |
| 8 | 2 | Long Term | -0.0548 | 0.2374 | 0.0821 | -0.3469 | -0.1917 | 0.0000 | 0.0000 | -0.3469 |
| 8 | 2 | Long Term | -0.0546 | 0.2377 | 0.0825 | -0.3469 | -0.1917 | 0.0000 | 0.0000 | -0.3469 |
| 8 | 2 | Long Term | -0.0525 | 0.3344 | 0.1503 | -0.4395 | -0.2554 | 0.0000 | 0.0000 | -0.4395 |
| 8 | 2 | Long Term | -0.0520 | 0.3585 | 0.1672 | -0.4626 | -0.2713 | 0.0000 | 0.0000 | -0.4626 |
| 8 | 2 | Long Term | -0.0474 | 0.4580 | 0.2045 | -0.5529 | -0.2994 | 0.0000 | 0.0000 | -0.5529 |
| 8 | 2 | Strength Check: | -0.0546 | 0.2377 | 0.0825 | -0.3469 | -0.1917 | 0.0000 | 0.0000 | -0.3469 |

## RESULT : Member Stresses

| Member | Station | Result Case | (P/A) @ Centroid (kips/in²) | Normal Stress @ Point 1 (kips/in²) | Normal Stress @ Point 2 (kips/in²) | Normal Stress @ Point 3 (kips/in²) | Normal Stress @ Point 4 (kips/in²) | Normal Stress @ Point 5 | Normal Stress @ Point 6 | Max ABS Total Stress (kips/in²) |
|---|---|---|---|---|---|---|---|---|---|---|
| 8 | 2 | Strength Check: | -0.0546 | 0.2377 | 0.0825 | -0.3469 | -0.1917 | 0.0000 | 0.0000 | -0.3469 |
| 8 | 2 | Strength Check: | -0.0546 | 0.2377 | 0.0825 | -0.3469 | -0.1917 | 0.0000 | 0.0000 | -0.3469 |
| 8 | 2 | Strength Check: | -0.0546 | 0.2377 | 0.0825 | -0.3469 | -0.1917 | 0.0000 | 0.0000 | -0.3469 |
| 8 | 2 | Strength Check: | 0.0077 | 0.3570 | 0.2213 | -0.3415 | -0.2058 | 0.0000 | 0.0000 | 0.3570 |
| 8 | 2 | Strength Check: | -0.0474 | 0.4580 | 0.2045 | -0.5529 | -0.2994 | 0.0000 | 0.0000 | -0.5529 |
| 9 | 0 | Set Precast In | 0.0000 | 0.0000 | 0.0000 | 0.0000 | 0.0000 | 0.0000 | 0.0000 | 0.0000 |
| 9 | 0 | Set Precast In | -0.0001 | 0.0439 | -0.0447 | -0.0441 | 0.0446 | 0.0000 | 0.0000 | -0.0447 |
| 9 | 0 | Tension PT: | -0.0001 | 0.0439 | -0.0447 | -0.0441 | 0.0446 | 0.0000 | 0.0000 | -0.0447 |
| 9 | 0 | Tension PT: | -0.0001 | 0.0439 | -0.0447 | -0.0441 | 0.0446 | 0.0000 | 0.0000 | -0.0447 |
| 9 | 0 | Tension PT: | -0.0001 | 0.0439 | -0.0447 | -0.0441 | 0.0446 | 0.0000 | 0.0000 | -0.0447 |
| 9 | 0 | Tension PT: | -0.0001 | 0.0439 | -0.0447 | -0.0441 | 0.0446 | 0.0000 | 0.0000 | -0.0447 |
| 9 | 0 | Tension PT: | -0.0655 | -0.0813 | -0.1904 | -0.0498 | 0.0594 | 0.0000 | 0.0000 | -0.1904 |
| 9 | 0 | Add | -0.0655 | -0.0813 | -0.1904 | -0.0498 | 0.0594 | 0.0000 | 0.0000 | -0.1904 |
| 9 | 0 | Add | -0.0655 | -0.0813 | -0.1904 | -0.0498 | 0.0594 | 0.0000 | 0.0000 | -0.1904 |
| 9 | 0 | Add | -0.0655 | -0.0813 | -0.1904 | -0.0498 | 0.0594 | 0.0000 | 0.0000 | -0.1904 |
| 9 | 0 | Add | -0.0655 | -0.0812 | -0.1904 | -0.0498 | 0.0594 | 0.0000 | 0.0000 | -0.1904 |
| 9 | 0 | Add | -0.0656 | -0.0595 | -0.2122 | -0.0716 | 0.0811 | 0.0000 | 0.0000 | -0.2122 |
| 9 | 0 | Backfill to Grade: | -0.0656 | -0.0595 | -0.2122 | -0.0716 | 0.0811 | 0.0000 | 0.0000 | -0.2122 |
| 9 | 0 | Backfill to Grade: | -0.0656 | -0.0595 | -0.2122 | -0.0716 | 0.0811 | 0.0000 | 0.0000 | -0.2122 |
| 9 | 0 | Backfill to Grade: | -0.0656 | -0.0595 | -0.2122 | -0.0716 | 0.0811 | 0.0000 | 0.0000 | -0.2122 |
| 9 | 0 | Backfill to Grade: | -0.0655 | -0.0594 | -0.2121 | -0.0716 | 0.0811 | 0.0000 | 0.0000 | -0.2121 |
| 9 | 0 | Backfill to Grade: | -0.0580 | 0.2272 | 0.0775 | -0.3432 | -0.1934 | 0.0000 | 0.0000 | -0.3432 |
| 9 | 0 | Backfill to Grade: | -0.0560 | 0.3118 | 0.1572 | -0.4237 | -0.2692 | 0.0000 | 0.0000 | -0.4237 |
| 9 | 0 | Pave: Pave: | -0.0580 | 0.2272 | 0.0775 | -0.3432 | -0.1934 | 0.0000 | 0.0000 | -0.3432 |
| 9 | 0 | Pave: Pave: | -0.0580 | 0.2272 | 0.0775 | -0.3432 | -0.1934 | 0.0000 | 0.0000 | -0.3432 |
| 9 | 0 | Pave: Pave: PT | -0.0580 | 0.2272 | 0.0775 | -0.3432 | -0.1934 | 0.0000 | 0.0000 | -0.3432 |
| 9 | 0 | Pave: Pave: | -0.0580 | 0.2272 | 0.0775 | -0.3432 | -0.1934 | 0.0000 | 0.0000 | -0.3432 |
| 9 | 0 | Pave: Pave: step | -0.0580 | 0.2304 | 0.0742 | -0.3464 | -0.1902 | 0.0000 | 0.0000 | -0.3464 |
| 9 | 0 | Open Bridge to | -0.0580 | 0.2304 | 0.0742 | -0.3464 | -0.1902 | 0.0000 | 0.0000 | -0.3464 |
| 9 | 0 | Open Bridge to | -0.0580 | 0.2304 | 0.0742 | -0.3464 | -0.1902 | 0.0000 | 0.0000 | -0.3464 |
| 9 | 0 | Open Bridge to | -0.0580 | 0.2304 | 0.0742 | -0.3464 | -0.1902 | 0.0000 | 0.0000 | -0.3464 |
| 9 | 0 | Open Bridge to | -0.0580 | 0.2304 | 0.0742 | -0.3464 | -0.1902 | 0.0000 | 0.0000 | -0.3464 |
| 9 | 0 | Open Bridge to | -0.0555 | 0.3511 | 0.1589 | -0.4622 | -0.2699 | 0.0000 | 0.0000 | -0.4622 |
| 9 | 0 | Open Bridge to | -0.0560 | 0.3270 | 0.1419 | -0.4390 | -0.2540 | 0.0000 | 0.0000 | -0.4390 |

## RESULT : Member Stresses

| Member | Station | Result Case | (P/A) @ Centroid (kips/in²) | Normal Stress @ Point 1 (kips/in²) | Normal Stress @ Point 2 (kips/in²) | Normal Stress @ Point 3 (kips/in²) | Normal Stress @ Point 4 (kips/in²) | Normal Stress @ Point 5 | Normal Stress @ Point 6 | Max ABS Total Stress (kips/in²) |
|---|---|---|---|---|---|---|---|---|---|---|
| 9 | 0 | Partial Live Load | -0.0580 | 0.2304 | 0.0742 | -0.3464 | -0.1902 | 0.0000 | 0.0000 | -0.3464 |
| 9 | 0 | Partial Live Load | -0.0580 | 0.2304 | 0.0742 | -0.3464 | -0.1902 | 0.0000 | 0.0000 | -0.3464 |
| 9 | 0 | Partial Live Load | -0.0580 | 0.2304 | 0.0742 | -0.3464 | -0.1902 | 0.0000 | 0.0000 | -0.3464 |
| 9 | 0 | Partial Live Load | -0.0580 | 0.2304 | 0.0742 | -0.3464 | -0.1902 | 0.0000 | 0.0000 | -0.3464 |
| 9 | 0 | Partial Live Load | -0.0577 | 0.2425 | 0.0827 | -0.3580 | -0.1982 | 0.0000 | 0.0000 | -0.3580 |
| 9 | 0 | Remove Long | -0.0577 | 0.2425 | 0.0827 | -0.3580 | -0.1982 | 0.0000 | 0.0000 | -0.3580 |
| 9 | 0 | Remove Long | -0.0577 | 0.2425 | 0.0827 | -0.3580 | -0.1982 | 0.0000 | 0.0000 | -0.3580 |
| 9 | 0 | Remove Long | -0.0577 | 0.2425 | 0.0827 | -0.3580 | -0.1982 | 0.0000 | 0.0000 | -0.3580 |
| 9 | 0 | Remove Long | -0.0549 | 0.2480 | 0.0891 | -0.3577 | -0.1988 | 0.0000 | 0.0000 | -0.3577 |
| 9 | 0 | Remove Long | -0.0551 | 0.2359 | 0.0807 | -0.3461 | -0.1909 | 0.0000 | 0.0000 | -0.3461 |
| 9 | 0 | Long Term | -0.0551 | 0.2359 | 0.0807 | -0.3461 | -0.1909 | 0.0000 | 0.0000 | -0.3461 |
| 9 | 0 | Long Term | -0.0551 | 0.2359 | 0.0807 | -0.3461 | -0.1909 | 0.0000 | 0.0000 | -0.3461 |
| 9 | 0 | Long Term | -0.0551 | 0.2359 | 0.0807 | -0.3461 | -0.1909 | 0.0000 | 0.0000 | -0.3461 |
| 9 | 0 | Long Term | -0.0549 | 0.2363 | 0.0810 | -0.3461 | -0.1909 | 0.0000 | 0.0000 | -0.3461 |
| 9 | 0 | Long Term | -0.0530 | 0.3328 | 0.1487 | -0.4388 | -0.2547 | 0.0000 | 0.0000 | -0.4388 |
| 9 | 0 | Long Term | -0.0525 | 0.3569 | 0.1657 | -0.4619 | -0.2706 | 0.0000 | 0.0000 | -0.4619 |
| 9 | 0 | Long Term | -0.0480 | 0.4562 | 0.2027 | -0.5523 | -0.2988 | 0.0000 | 0.0000 | -0.5523 |
| 9 | 0 | Strength Check: | -0.0549 | 0.2363 | 0.0810 | -0.3461 | -0.1909 | 0.0000 | 0.0000 | -0.3461 |
| 9 | 0 | Strength Check: | -0.0549 | 0.2363 | 0.0810 | -0.3461 | -0.1909 | 0.0000 | 0.0000 | -0.3461 |
| 9 | 0 | Strength Check: | -0.0549 | 0.2363 | 0.0810 | -0.3461 | -0.1909 | 0.0000 | 0.0000 | -0.3461 |
| 9 | 0 | Strength Check: | -0.0549 | 0.2363 | 0.0810 | -0.3461 | -0.1909 | 0.0000 | 0.0000 | -0.3461 |
| 9 | 0 | Strength Check: | 0.0074 | 0.3555 | 0.2198 | -0.3407 | -0.2050 | 0.0000 | 0.0000 | 0.3555 |
| 9 | 0 | Strength Check: | -0.0480 | 0.4562 | 0.2027 | -0.5523 | -0.2988 | 0.0000 | 0.0000 | -0.5523 |
| 9 | 1 | Set Precast In | 0.0000 | 0.0000 | 0.0000 | 0.0000 | 0.0000 | 0.0000 | 0.0000 | 0.0000 |
| 9 | 1 | Set Precast In | -0.0001 | 0.0218 | -0.0226 | -0.0219 | 0.0225 | 0.0000 | 0.0000 | -0.0226 |
| 9 | 1 | Tension PT: | -0.0001 | 0.0218 | -0.0226 | -0.0219 | 0.0225 | 0.0000 | 0.0000 | -0.0226 |
| 9 | 1 | Tension PT: | -0.0001 | 0.0218 | -0.0226 | -0.0219 | 0.0225 | 0.0000 | 0.0000 | -0.0226 |
| 9 | 1 | Tension PT: | -0.0001 | 0.0218 | -0.0226 | -0.0219 | 0.0225 | 0.0000 | 0.0000 | -0.0226 |
| 9 | 1 | Tension PT: | -0.0001 | 0.0218 | -0.0226 | -0.0219 | 0.0225 | 0.0000 | 0.0000 | -0.0226 |
| 9 | 1 | Tension PT: | -0.0647 | -0.1011 | -0.1675 | -0.0284 | 0.0380 | 0.0000 | 0.0000 | -0.1675 |
| 9 | 1 | Add | -0.0647 | -0.1011 | -0.1675 | -0.0284 | 0.0380 | 0.0000 | 0.0000 | -0.1675 |
| 9 | 1 | Add | -0.0647 | -0.1011 | -0.1675 | -0.0284 | 0.0380 | 0.0000 | 0.0000 | -0.1675 |
| 9 | 1 | Add | -0.0647 | -0.1011 | -0.1675 | -0.0284 | 0.0380 | 0.0000 | 0.0000 | -0.1675 |
| 9 | 1 | Add | -0.0647 | -0.1010 | -0.1674 | -0.0284 | 0.0380 | 0.0000 | 0.0000 | -0.1674 |

## RESULT : Member Stresses

| Member | Station | Result Case | (P/A) @ Centroid (kips/in²) | Normal Stress @ Point 1 (kips/in²) | Normal Stress @ Point 2 (kips/in²) | Normal Stress @ Point 3 (kips/in²) | Normal Stress @ Point 4 (kips/in²) | Normal Stress @ Point 5 | Normal Stress @ Point 6 | Max ABS Total Stress (kips/in²) |
|---|---|---|---|---|---|---|---|---|---|---|
| 9 | 1 | Add | -0.0647 | -0.0956 | -0.1728 | -0.0339 | 0.0433 | 0.0000 | 0.0000 | -0.1728 |
| 9 | 1 | Backfill to Grade: | -0.0647 | -0.0956 | -0.1728 | -0.0339 | 0.0433 | 0.0000 | 0.0000 | -0.1728 |
| 9 | 1 | Backfill to Grade: | -0.0647 | -0.0956 | -0.1728 | -0.0339 | 0.0433 | 0.0000 | 0.0000 | -0.1728 |
| 9 | 1 | Backfill to Grade: | -0.0647 | -0.0956 | -0.1728 | -0.0339 | 0.0433 | 0.0000 | 0.0000 | -0.1728 |
| 9 | 1 | Backfill to Grade: | -0.0647 | -0.0956 | -0.1727 | -0.0339 | 0.0433 | 0.0000 | 0.0000 | -0.1727 |
| 9 | 1 | Backfill to Grade: | -0.0572 | 0.0330 | -0.0410 | -0.1473 | -0.0733 | 0.0000 | 0.0000 | -0.1473 |
| 9 | 1 | Backfill to Grade: | -0.0552 | 0.0708 | -0.0079 | -0.1812 | -0.1024 | 0.0000 | 0.0000 | -0.1812 |
| 9 | 1 | Pave: Pave: | -0.0572 | 0.0330 | -0.0410 | -0.1473 | -0.0733 | 0.0000 | 0.0000 | -0.1473 |
| 9 | 1 | Pave: Pave: | -0.0572 | 0.0330 | -0.0410 | -0.1473 | -0.0733 | 0.0000 | 0.0000 | -0.1473 |
| 9 | 1 | Pave: Pave: PT | -0.0572 | 0.0330 | -0.0410 | -0.1473 | -0.0733 | 0.0000 | 0.0000 | -0.1473 |
| 9 | 1 | Pave: Pave: | -0.0572 | 0.0329 | -0.0411 | -0.1473 | -0.0733 | 0.0000 | 0.0000 | -0.1473 |
| 9 | 1 | Pave: Pave: step | -0.0572 | 0.0337 | -0.0419 | -0.1481 | -0.0725 | 0.0000 | 0.0000 | -0.1481 |
| 9 | 1 | Open Bridge to | -0.0572 | 0.0337 | -0.0419 | -0.1481 | -0.0725 | 0.0000 | 0.0000 | -0.1481 |
| 9 | 1 | Open Bridge to | -0.0572 | 0.0337 | -0.0419 | -0.1481 | -0.0725 | 0.0000 | 0.0000 | -0.1481 |
| 9 | 1 | Open Bridge to | -0.0572 | 0.0337 | -0.0419 | -0.1481 | -0.0725 | 0.0000 | 0.0000 | -0.1481 |
| 9 | 1 | Open Bridge to | -0.0572 | 0.0337 | -0.0419 | -0.1481 | -0.0725 | 0.0000 | 0.0000 | -0.1481 |
| 9 | 1 | Open Bridge to | -0.0547 | 0.0847 | -0.0042 | -0.1942 | -0.1052 | 0.0000 | 0.0000 | -0.1942 |
| 9 | 1 | Open Bridge to | -0.0552 | 0.0745 | -0.0118 | -0.1850 | -0.0987 | 0.0000 | 0.0000 | -0.1850 |
| 9 | 1 | Partial Live Load | -0.0572 | 0.0337 | -0.0419 | -0.1481 | -0.0725 | 0.0000 | 0.0000 | -0.1481 |
| 9 | 1 | Partial Live Load | -0.0572 | 0.0337 | -0.0419 | -0.1481 | -0.0725 | 0.0000 | 0.0000 | -0.1481 |
| 9 | 1 | Partial Live Load | -0.0572 | 0.0337 | -0.0419 | -0.1481 | -0.0725 | 0.0000 | 0.0000 | -0.1481 |
| 9 | 1 | Partial Live Load | -0.0572 | 0.0337 | -0.0419 | -0.1481 | -0.0725 | 0.0000 | 0.0000 | -0.1481 |
| 9 | 1 | Partial Live Load | -0.0570 | 0.0388 | -0.0381 | -0.1527 | -0.0758 | 0.0000 | 0.0000 | -0.1527 |
| 9 | 1 | Remove Long | -0.0570 | 0.0388 | -0.0381 | -0.1527 | -0.0758 | 0.0000 | 0.0000 | -0.1527 |
| 9 | 1 | Remove Long | -0.0570 | 0.0388 | -0.0381 | -0.1527 | -0.0758 | 0.0000 | 0.0000 | -0.1527 |
| 9 | 1 | Remove Long | -0.0570 | 0.0388 | -0.0381 | -0.1527 | -0.0758 | 0.0000 | 0.0000 | -0.1527 |
| 9 | 1 | Remove Long | -0.0541 | 0.0443 | -0.0317 | -0.1525 | -0.0765 | 0.0000 | 0.0000 | -0.1525 |
| 9 | 1 | Remove Long | -0.0543 | 0.0392 | -0.0355 | -0.1479 | -0.0732 | 0.0000 | 0.0000 | -0.1479 |
| 9 | 1 | Long Term | -0.0543 | 0.0392 | -0.0355 | -0.1479 | -0.0732 | 0.0000 | 0.0000 | -0.1479 |
| 9 | 1 | Long Term | -0.0543 | 0.0392 | -0.0355 | -0.1479 | -0.0732 | 0.0000 | 0.0000 | -0.1479 |
| 9 | 1 | Long Term | -0.0543 | 0.0392 | -0.0355 | -0.1479 | -0.0732 | 0.0000 | 0.0000 | -0.1479 |
| 9 | 1 | Long Term | -0.0542 | 0.0395 | -0.0351 | -0.1478 | -0.0733 | 0.0000 | 0.0000 | -0.1478 |
| 9 | 1 | Long Term | -0.0522 | 0.0803 | -0.0050 | -0.1847 | -0.0994 | 0.0000 | 0.0000 | -0.1847 |
| 9 | 1 | Long Term | -0.0517 | 0.0905 | 0.0026 | -0.1939 | -0.1060 | 0.0000 | 0.0000 | -0.1939 |

## RESULT : Member Stresses

| Member | Station | Result Case | (P/A) @ Centroid (kips/in²) | Normal Stress @ Point 1 (kips/in²) | Normal Stress @ Point 2 (kips/in²) | Normal Stress @ Point 3 (kips/in²) | Normal Stress @ Point 4 (kips/in²) | Normal Stress @ Point 5 | Normal Stress @ Point 6 | Max ABS Total Stress (kips/in²) |
|---|---|---|---|---|---|---|---|---|---|---|
| 9 | 1 | Long Term | -0.0473 | 0.1618 | 0.0504 | -0.2563 | -0.1449 | 0.0000 | 0.0000 | -0.2563 |
| 9 | 1 | Strength Check: | -0.0542 | 0.0395 | -0.0351 | -0.1478 | -0.0733 | 0.0000 | 0.0000 | -0.1478 |
| 9 | 1 | Strength Check: | -0.0542 | 0.0395 | -0.0351 | -0.1478 | -0.0733 | 0.0000 | 0.0000 | -0.1478 |
| 9 | 1 | Strength Check: | -0.0542 | 0.0395 | -0.0351 | -0.1478 | -0.0733 | 0.0000 | 0.0000 | -0.1478 |
| 9 | 1 | Strength Check: | -0.0542 | 0.0395 | -0.0351 | -0.1478 | -0.0733 | 0.0000 | 0.0000 | -0.1478 |
| 9 | 1 | Strength Check: | 0.0074 | 0.1565 | 0.1029 | -0.1416 | -0.0880 | 0.0000 | 0.0000 | 0.1565 |
| 9 | 1 | Strength Check: | -0.0473 | 0.1618 | 0.0504 | -0.2563 | -0.1449 | 0.0000 | 0.0000 | -0.2563 |
| 9 | 2 | Set Precast In | 0.0000 | 0.0000 | 0.0000 | 0.0000 | 0.0000 | 0.0000 | 0.0000 | 0.0000 |
| 9 | 2 | Set Precast In | 0.0000 | 0.0064 | -0.0071 | -0.0064 | 0.0070 | 0.0000 | 0.0000 | -0.0071 |
| 9 | 2 | Tension PT: | 0.0000 | 0.0064 | -0.0071 | -0.0064 | 0.0070 | 0.0000 | 0.0000 | -0.0071 |
| 9 | 2 | Tension PT: | 0.0000 | 0.0064 | -0.0071 | -0.0064 | 0.0070 | 0.0000 | 0.0000 | -0.0071 |
| 9 | 2 | Tension PT: | 0.0000 | 0.0064 | -0.0071 | -0.0064 | 0.0070 | 0.0000 | 0.0000 | -0.0071 |
| 9 | 2 | Tension PT: | 0.0000 | 0.0064 | -0.0071 | -0.0064 | 0.0070 | 0.0000 | 0.0000 | -0.0071 |
| 9 | 2 | Tension PT: | -0.0639 | -0.1141 | -0.1510 | -0.0136 | 0.0233 | 0.0000 | 0.0000 | -0.1510 |
| 9 | 2 | Add | -0.0639 | -0.1141 | -0.1510 | -0.0136 | 0.0233 | 0.0000 | 0.0000 | -0.1510 |
| 9 | 2 | Add | -0.0639 | -0.1141 | -0.1510 | -0.0136 | 0.0233 | 0.0000 | 0.0000 | -0.1510 |
| 9 | 2 | Add | -0.0639 | -0.1141 | -0.1510 | -0.0136 | 0.0233 | 0.0000 | 0.0000 | -0.1510 |
| 9 | 2 | Add | -0.0638 | -0.1140 | -0.1510 | -0.0136 | 0.0233 | 0.0000 | 0.0000 | -0.1510 |
| 9 | 2 | Add | -0.0638 | -0.1140 | -0.1510 | -0.0136 | 0.0233 | 0.0000 | 0.0000 | -0.1510 |
| 9 | 2 | Backfill to Grade: | -0.0638 | -0.1140 | -0.1510 | -0.0136 | 0.0233 | 0.0000 | 0.0000 | -0.1510 |
| 9 | 2 | Backfill to Grade: | -0.0638 | -0.1140 | -0.1510 | -0.0136 | 0.0233 | 0.0000 | 0.0000 | -0.1510 |
| 9 | 2 | Backfill to Grade: | -0.0638 | -0.1140 | -0.1510 | -0.0136 | 0.0233 | 0.0000 | 0.0000 | -0.1510 |
| 9 | 2 | Backfill to Grade: | -0.0638 | -0.1140 | -0.1509 | -0.0136 | 0.0233 | 0.0000 | 0.0000 | -0.1509 |
| 9 | 2 | Backfill to Grade: | -0.0563 | -0.0302 | -0.0637 | -0.0824 | -0.0489 | 0.0000 | 0.0000 | -0.0824 |
| 9 | 2 | Backfill to Grade: | -0.0543 | -0.0052 | -0.0434 | -0.1034 | -0.0652 | 0.0000 | 0.0000 | -0.1034 |
| 9 | 2 | Pave: Pave: | -0.0563 | -0.0302 | -0.0637 | -0.0824 | -0.0489 | 0.0000 | 0.0000 | -0.0824 |
| 9 | 2 | Pave: Pave: | -0.0563 | -0.0302 | -0.0637 | -0.0824 | -0.0489 | 0.0000 | 0.0000 | -0.0824 |
| 9 | 2 | Pave: Pave: PT | -0.0563 | -0.0302 | -0.0637 | -0.0824 | -0.0489 | 0.0000 | 0.0000 | -0.0824 |
| 9 | 2 | Pave: Pave: | -0.0563 | -0.0302 | -0.0637 | -0.0824 | -0.0489 | 0.0000 | 0.0000 | -0.0824 |
| 9 | 2 | Pave: Pave: step | -0.0563 | -0.0302 | -0.0637 | -0.0824 | -0.0489 | 0.0000 | 0.0000 | -0.0824 |
| 9 | 2 | Open Bridge to | -0.0563 | -0.0302 | -0.0637 | -0.0824 | -0.0489 | 0.0000 | 0.0000 | -0.0824 |
| 9 | 2 | Open Bridge to | -0.0563 | -0.0302 | -0.0637 | -0.0824 | -0.0489 | 0.0000 | 0.0000 | -0.0824 |
| 9 | 2 | Open Bridge to | -0.0563 | -0.0302 | -0.0637 | -0.0824 | -0.0489 | 0.0000 | 0.0000 | -0.0824 |
| 9 | 2 | Open Bridge to | -0.0563 | -0.0302 | -0.0637 | -0.0824 | -0.0489 | 0.0000 | 0.0000 | -0.0824 |

## RESULT : Member Stresses

| Member | Station | Result Case | (P/A) @ Centroid (kips/in²) | Normal Stress @ Point 1 (kips/in²) | Normal Stress @ Point 2 (kips/in²) | Normal Stress @ Point 3 (kips/in²) | Normal Stress @ Point 4 (kips/in²) | Normal Stress @ Point 5 | Normal Stress @ Point 6 | Max ABS Total Stress (kips/in²) |
|---|---|---|---|---|---|---|---|---|---|---|
| 9 | 2 | Open Bridge to | -0.0538 | 0.0010 | -0.0383 | -0.1087 | -0.0693 | 0.0000 | 0.0000 | -0.1087 |
| 9 | 2 | Open Bridge to | -0.0543 | -0.0052 | -0.0434 | -0.1034 | -0.0652 | 0.0000 | 0.0000 | -0.1034 |
| 9 | 2 | Partial Live Load | -0.0563 | -0.0302 | -0.0637 | -0.0824 | -0.0489 | 0.0000 | 0.0000 | -0.0824 |
| 9 | 2 | Partial Live Load | -0.0563 | -0.0302 | -0.0637 | -0.0824 | -0.0489 | 0.0000 | 0.0000 | -0.0824 |
| 9 | 2 | Partial Live Load | -0.0563 | -0.0302 | -0.0637 | -0.0824 | -0.0489 | 0.0000 | 0.0000 | -0.0824 |
| 9 | 2 | Partial Live Load | -0.0563 | -0.0302 | -0.0637 | -0.0824 | -0.0489 | 0.0000 | 0.0000 | -0.0824 |
| 9 | 2 | Partial Live Load | -0.0561 | -0.0271 | -0.0612 | -0.0851 | -0.0509 | 0.0000 | 0.0000 | -0.0851 |
| 9 | 2 | Remove Long | -0.0561 | -0.0271 | -0.0612 | -0.0851 | -0.0509 | 0.0000 | 0.0000 | -0.0851 |
| 9 | 2 | Remove Long | -0.0561 | -0.0271 | -0.0612 | -0.0851 | -0.0509 | 0.0000 | 0.0000 | -0.0851 |
| 9 | 2 | Remove Long | -0.0561 | -0.0271 | -0.0612 | -0.0851 | -0.0509 | 0.0000 | 0.0000 | -0.0851 |
| 9 | 2 | Remove Long | -0.0531 | -0.0214 | -0.0545 | -0.0847 | -0.0517 | 0.0000 | 0.0000 | -0.0847 |
| 9 | 2 | Remove Long | -0.0533 | -0.0246 | -0.0570 | -0.0821 | -0.0496 | 0.0000 | 0.0000 | -0.0821 |
| 9 | 2 | Long Term | -0.0533 | -0.0246 | -0.0570 | -0.0821 | -0.0496 | 0.0000 | 0.0000 | -0.0821 |
| 9 | 2 | Long Term | -0.0533 | -0.0246 | -0.0570 | -0.0821 | -0.0496 | 0.0000 | 0.0000 | -0.0821 |
| 9 | 2 | Long Term | -0.0533 | -0.0246 | -0.0570 | -0.0821 | -0.0496 | 0.0000 | 0.0000 | -0.0821 |
| 9 | 2 | Long Term | -0.0532 | -0.0243 | -0.0567 | -0.0821 | -0.0497 | 0.0000 | 0.0000 | -0.0821 |
| 9 | 2 | Long Term | -0.0512 | 0.0006 | -0.0364 | -0.1031 | -0.0660 | 0.0000 | 0.0000 | -0.1031 |
| 9 | 2 | Long Term | -0.0507 | 0.0069 | -0.0313 | -0.1083 | -0.0701 | 0.0000 | 0.0000 | -0.1083 |
| 9 | 2 | Long Term | -0.0463 | 0.0612 | 0.0164 | -0.1537 | -0.1090 | 0.0000 | 0.0000 | -0.1537 |
| 9 | 2 | Strength Check: | -0.0532 | -0.0243 | -0.0567 | -0.0821 | -0.0497 | 0.0000 | 0.0000 | -0.0821 |
| 9 | 2 | Strength Check: | -0.0532 | -0.0243 | -0.0567 | -0.0821 | -0.0497 | 0.0000 | 0.0000 | -0.0821 |
| 9 | 2 | Strength Check: | -0.0532 | -0.0243 | -0.0567 | -0.0821 | -0.0497 | 0.0000 | 0.0000 | -0.0821 |
| 9 | 2 | Strength Check: | -0.0532 | -0.0243 | -0.0567 | -0.0821 | -0.0497 | 0.0000 | 0.0000 | -0.0821 |
| 9 | 2 | Strength Check: | 0.0075 | 0.0902 | 0.0801 | -0.0753 | -0.0652 | 0.0000 | 0.0000 | 0.0902 |
| 9 | 2 | Strength Check: | -0.0463 | 0.0612 | 0.0164 | -0.1537 | -0.1090 | 0.0000 | 0.0000 | -0.1537 |
| 10 | 0 | Set Precast In | 0.0000 | 0.0000 | 0.0000 | 0.0000 | 0.0000 | 0.0000 | 0.0000 | 0.0000 |
| 10 | 0 | Set Precast In | 0.0000 | 0.0238 | -0.0238 | -0.0238 | 0.0238 | 0.0000 | 0.0000 | 0.0238 |
| 10 | 0 | Tension PT: | 0.0000 | 0.0238 | -0.0238 | -0.0238 | 0.0238 | 0.0000 | 0.0000 | 0.0238 |
| 10 | 0 | Tension PT: | 0.0000 | 0.0238 | -0.0238 | -0.0238 | 0.0238 | 0.0000 | 0.0000 | -0.0238 |
| 10 | 0 | Tension PT: | 0.0000 | 0.0238 | -0.0238 | -0.0238 | 0.0238 | 0.0000 | 0.0000 | -0.0238 |
| 10 | 0 | Tension PT: | 0.0000 | 0.0238 | -0.0238 | -0.0238 | 0.0238 | 0.0000 | 0.0000 | 0.0238 |
| 10 | 0 | Tension PT: | -0.0367 | -0.2453 | -0.3642 | 0.1719 | 0.2908 | 0.0000 | 0.0000 | -0.3642 |
| 10 | 0 | Add | -0.0367 | -0.2453 | -0.3642 | 0.1719 | 0.2908 | 0.0000 | 0.0000 | -0.3642 |
| 10 | 0 | Add | -0.0367 | -0.2453 | -0.3642 | 0.1719 | 0.2908 | 0.0000 | 0.0000 | -0.3642 |

## RESULT : Member Stresses

| Member | Station | Result Case | (P/A) @ Centroid (kips/in²) | Normal Stress @ Point 1 (kips/in²) | Normal Stress @ Point 2 (kips/in²) | Normal Stress @ Point 3 (kips/in²) | Normal Stress @ Point 4 (kips/in²) | Normal Stress @ Point 5 | Normal Stress @ Point 6 | Max ABS Total Stress (kips/in²) |
|---|---|---|---|---|---|---|---|---|---|---|
| 10 | 0 | Add | -0.0367 | -0.2453 | -0.3642 | 0.1719 | 0.2908 | 0.0000 | 0.0000 | -0.3642 |
| 10 | 0 | Add | -0.0367 | -0.2452 | -0.3640 | 0.1718 | 0.2907 | 0.0000 | 0.0000 | -0.3640 |
| 10 | 0 | Add | -0.0367 | -0.2452 | -0.3640 | 0.1718 | 0.2907 | 0.0000 | 0.0000 | -0.3640 |
| 10 | 0 | Backfill to Grade: | -0.0367 | -0.2452 | -0.3640 | 0.1718 | 0.2907 | 0.0000 | 0.0000 | -0.3640 |
| 10 | 0 | Backfill to Grade: | -0.0367 | -0.2452 | -0.3640 | 0.1718 | 0.2907 | 0.0000 | 0.0000 | -0.3640 |
| 10 | 0 | Backfill to Grade: | -0.0367 | -0.2452 | -0.3640 | 0.1718 | 0.2907 | 0.0000 | 0.0000 | -0.3640 |
| 10 | 0 | Backfill to Grade: | -0.0366 | -0.2450 | -0.3638 | 0.1717 | 0.2906 | 0.0000 | 0.0000 | -0.3638 |
| 10 | 0 | Backfill to Grade: | -0.0366 | 0.0608 | -0.0581 | -0.1340 | -0.0152 | 0.0000 | 0.0000 | -0.1340 |
| 10 | 0 | Backfill to Grade: | -0.0366 | 0.1417 | 0.0228 | -0.2149 | -0.0961 | 0.0000 | 0.0000 | -0.2149 |
| 10 | 0 | Pave: Pave: | -0.0366 | 0.0608 | -0.0581 | -0.1340 | -0.0152 | 0.0000 | 0.0000 | -0.1340 |
| 10 | 0 | Pave: Pave: | -0.0366 | 0.0608 | -0.0581 | -0.1340 | -0.0152 | 0.0000 | 0.0000 | -0.1340 |
| 10 | 0 | Pave: Pave: PT | -0.0366 | 0.0608 | -0.0581 | -0.1340 | -0.0152 | 0.0000 | 0.0000 | -0.1340 |
| 10 | 0 | Pave: Pave: | -0.0366 | 0.0607 | -0.0581 | -0.1340 | -0.0152 | 0.0000 | 0.0000 | -0.1340 |
| 10 | 0 | Pave: Pave: step | -0.0366 | 0.0607 | -0.0581 | -0.1340 | -0.0152 | 0.0000 | 0.0000 | -0.1340 |
| 10 | 0 | Open Bridge to | -0.0366 | 0.0607 | -0.0581 | -0.1340 | -0.0152 | 0.0000 | 0.0000 | -0.1340 |
| 10 | 0 | Open Bridge to | -0.0366 | 0.0607 | -0.0581 | -0.1340 | -0.0152 | 0.0000 | 0.0000 | -0.1340 |
| 10 | 0 | Open Bridge to | -0.0366 | 0.0607 | -0.0581 | -0.1340 | -0.0152 | 0.0000 | 0.0000 | -0.1340 |
| 10 | 0 | Open Bridge to | -0.0366 | 0.0608 | -0.0581 | -0.1340 | -0.0152 | 0.0000 | 0.0000 | -0.1340 |
| 10 | 0 | Open Bridge to | -0.0366 | 0.1619 | 0.0430 | -0.2351 | -0.1163 | 0.0000 | 0.0000 | -0.2351 |
| 10 | 0 | Open Bridge to | -0.0366 | 0.1416 | 0.0228 | -0.2149 | -0.0961 | 0.0000 | 0.0000 | -0.2149 |
| 10 | 0 | Partial Live Load | -0.0366 | 0.0608 | -0.0581 | -0.1340 | -0.0152 | 0.0000 | 0.0000 | -0.1340 |
| 10 | 0 | Partial Live Load | -0.0366 | 0.0608 | -0.0581 | -0.1340 | -0.0152 | 0.0000 | 0.0000 | -0.1340 |
| 10 | 0 | Partial Live Load | -0.0366 | 0.0608 | -0.0581 | -0.1340 | -0.0152 | 0.0000 | 0.0000 | -0.1340 |
| 10 | 0 | Partial Live Load | -0.0366 | 0.0608 | -0.0581 | -0.1340 | -0.0152 | 0.0000 | 0.0000 | -0.1340 |
| 10 | 0 | Partial Live Load | -0.0366 | 0.0709 | -0.0480 | -0.1442 | -0.0253 | 0.0000 | 0.0000 | -0.1442 |
| 10 | 0 | Remove Long | -0.0366 | 0.0709 | -0.0480 | -0.1442 | -0.0253 | 0.0000 | 0.0000 | -0.1442 |
| 10 | 0 | Remove Long | -0.0366 | 0.0709 | -0.0480 | -0.1442 | -0.0253 | 0.0000 | 0.0000 | -0.1442 |
| 10 | 0 | Remove Long | -0.0366 | 0.0709 | -0.0480 | -0.1442 | -0.0253 | 0.0000 | 0.0000 | -0.1442 |
| 10 | 0 | Remove Long | -0.0349 | 0.0834 | -0.0321 | -0.1533 | -0.0378 | 0.0000 | 0.0000 | -0.1533 |
| 10 | 0 | Remove Long | -0.0349 | 0.0733 | -0.0422 | -0.1432 | -0.0277 | 0.0000 | 0.0000 | -0.1432 |
| 10 | 0 | Long Term | -0.0349 | 0.0733 | -0.0422 | -0.1432 | -0.0277 | 0.0000 | 0.0000 | -0.1432 |
| 10 | 0 | Long Term | -0.0349 | 0.0733 | -0.0422 | -0.1432 | -0.0277 | 0.0000 | 0.0000 | -0.1432 |
| 10 | 0 | Long Term | -0.0349 | 0.0733 | -0.0422 | -0.1432 | -0.0277 | 0.0000 | 0.0000 | -0.1432 |
| 10 | 0 | Long Term | -0.0349 | 0.0738 | -0.0415 | -0.1435 | -0.0282 | 0.0000 | 0.0000 | -0.1435 |

## RESULT : Member Stresses

| Member | Station | Result Case | (P/A) @ Centroid (kips/in²) | Normal Stress @ Point 1 (kips/in²) | Normal Stress @ Point 2 (kips/in²) | Normal Stress @ Point 3 (kips/in²) | Normal Stress @ Point 4 (kips/in²) | Normal Stress @ Point 5 | Normal Stress @ Point 6 | Max ABS Total Stress (kips/in²) |
|---|---|---|---|---|---|---|---|---|---|---|
| 10 | 0 | Long Term | -0.0349 | 0.1547 | 0.0393 | -0.2244 | -0.1091 | 0.0000 | 0.0000 | -0.2244 |
| 10 | 0 | Long Term | -0.0349 | 0.1749 | 0.0596 | -0.2447 | -0.1293 | 0.0000 | 0.0000 | -0.2447 |
| 10 | 0 | Long Term | -0.0349 | 0.3638 | 0.2365 | -0.4335 | -0.3062 | 0.0000 | 0.0000 | -0.4335 |
| 10 | 0 | Strength Check: | -0.0349 | 0.0738 | -0.0415 | -0.1435 | -0.0282 | 0.0000 | 0.0000 | -0.1435 |
| 10 | 0 | Strength Check: | -0.0349 | 0.0738 | -0.0415 | -0.1435 | -0.0282 | 0.0000 | 0.0000 | -0.1435 |
| 10 | 0 | Strength Check: | -0.0349 | 0.0738 | -0.0415 | -0.1435 | -0.0282 | 0.0000 | 0.0000 | -0.1435 |
| 10 | 0 | Strength Check: | -0.0349 | 0.0738 | -0.0415 | -0.1435 | -0.0282 | 0.0000 | 0.0000 | -0.1435 |
| 10 | 0 | Strength Check: | 0.0000 | 0.3296 | 0.2820 | -0.3296 | -0.2820 | 0.0000 | 0.0000 | 0.3296 |
| 10 | 0 | Strength Check: | -0.0349 | 0.3638 | 0.2365 | -0.4335 | -0.3062 | 0.0000 | 0.0000 | -0.4335 |
| 10 | 1 | Set Precast In | 0.0000 | 0.0000 | 0.0000 | 0.0000 | 0.0000 | 0.0000 | 0.0000 | 0.0000 |
| 10 | 1 | Set Precast In | 0.0000 | 0.0059 | -0.0059 | -0.0059 | 0.0059 | 0.0000 | 0.0000 | 0.0059 |
| 10 | 1 | Tension PT: | 0.0000 | 0.0059 | -0.0059 | -0.0059 | 0.0059 | 0.0000 | 0.0000 | 0.0059 |
| 10 | 1 | Tension PT: | 0.0000 | 0.0059 | -0.0059 | -0.0059 | 0.0059 | 0.0000 | 0.0000 | -0.0059 |
| 10 | 1 | Tension PT: | 0.0000 | 0.0059 | -0.0059 | -0.0059 | 0.0059 | 0.0000 | 0.0000 | -0.0059 |
| 10 | 1 | Tension PT: | 0.0000 | 0.0059 | -0.0059 | -0.0059 | 0.0059 | 0.0000 | 0.0000 | 0.0059 |
| 10 | 1 | Tension PT: | 0.0000 | 0.0059 | -0.0059 | -0.0059 | 0.0059 | 0.0000 | 0.0000 | -0.0059 |
| 10 | 1 | Add | 0.0000 | 0.0059 | -0.0059 | -0.0059 | 0.0059 | 0.0000 | 0.0000 | -0.0059 |
| 10 | 1 | Add | 0.0000 | 0.0059 | -0.0059 | -0.0059 | 0.0059 | 0.0000 | 0.0000 | -0.0059 |
| 10 | 1 | Add | 0.0000 | 0.0059 | -0.0059 | -0.0059 | 0.0059 | 0.0000 | 0.0000 | -0.0059 |
| 10 | 1 | Add | 0.0000 | 0.0059 | -0.0059 | -0.0059 | 0.0059 | 0.0000 | 0.0000 | -0.0059 |
| 10 | 1 | Add | 0.0000 | 0.0059 | -0.0059 | -0.0059 | 0.0059 | 0.0000 | 0.0000 | -0.0059 |
| 10 | 1 | Backfill to Grade: | 0.0000 | 0.0059 | -0.0059 | -0.0059 | 0.0059 | 0.0000 | 0.0000 | -0.0059 |
| 10 | 1 | Backfill to Grade: | 0.0000 | 0.0059 | -0.0059 | -0.0059 | 0.0059 | 0.0000 | 0.0000 | -0.0059 |
| 10 | 1 | Backfill to Grade: | 0.0000 | 0.0059 | -0.0059 | -0.0059 | 0.0059 | 0.0000 | 0.0000 | -0.0059 |
| 10 | 1 | Backfill to Grade: | 0.0000 | 0.0059 | -0.0059 | -0.0059 | 0.0059 | 0.0000 | 0.0000 | -0.0059 |
| 10 | 1 | Backfill to Grade: | 0.0000 | 0.0853 | 0.0734 | -0.0853 | -0.0734 | 0.0000 | 0.0000 | -0.0853 |
| 10 | 1 | Backfill to Grade: | 0.0000 | 0.1062 | 0.0943 | -0.1062 | -0.0943 | 0.0000 | 0.0000 | -0.1062 |
| 10 | 1 | Pave: Pave: | 0.0000 | 0.0853 | 0.0734 | -0.0853 | -0.0734 | 0.0000 | 0.0000 | -0.0853 |
| 10 | 1 | Pave: Pave: | 0.0000 | 0.0853 | 0.0734 | -0.0853 | -0.0734 | 0.0000 | 0.0000 | -0.0853 |
| 10 | 1 | Pave: Pave: PT | 0.0000 | 0.0853 | 0.0734 | -0.0853 | -0.0734 | 0.0000 | 0.0000 | -0.0853 |
| 10 | 1 | Pave: Pave: | 0.0000 | 0.0853 | 0.0734 | -0.0853 | -0.0734 | 0.0000 | 0.0000 | -0.0853 |
| 10 | 1 | Pave: Pave: step | 0.0000 | 0.0853 | 0.0734 | -0.0853 | -0.0734 | 0.0000 | 0.0000 | -0.0853 |
| 10 | 1 | Open Bridge to | 0.0000 | 0.0853 | 0.0734 | -0.0853 | -0.0734 | 0.0000 | 0.0000 | -0.0853 |
| 10 | 1 | Open Bridge to | 0.0000 | 0.0853 | 0.0734 | -0.0853 | -0.0734 | 0.0000 | 0.0000 | -0.0853 |

## RESULT : Member Stresses

| Member | Station | Result Case | (P/A) @ Centroid (kips/in²) | Normal Stress @ Point 1 (kips/in²) | Normal Stress @ Point 2 (kips/in²) | Normal Stress @ Point 3 (kips/in²) | Normal Stress @ Point 4 (kips/in²) | Normal Stress @ Point 5 | Normal Stress @ Point 6 | Max ABS Total Stress (kips/in²) |
|---|---|---|---|---|---|---|---|---|---|---|
| 10 | 1 | Open Bridge to | 0.0000 | 0.0853 | 0.0734 | -0.0853 | -0.0734 | 0.0000 | 0.0000 | -0.0853 |
| 10 | 1 | Open Bridge to | 0.0000 | 0.0853 | 0.0734 | -0.0853 | -0.0734 | 0.0000 | 0.0000 | -0.0853 |
| 10 | 1 | Open Bridge to | 0.0000 | 0.1115 | 0.0996 | -0.1115 | -0.0996 | 0.0000 | 0.0000 | -0.1115 |
| 10 | 1 | Open Bridge to | 0.0000 | 0.1062 | 0.0943 | -0.1062 | -0.0943 | 0.0000 | 0.0000 | -0.1062 |
| 10 | 1 | Partial Live Load | 0.0000 | 0.0853 | 0.0734 | -0.0853 | -0.0734 | 0.0000 | 0.0000 | -0.0853 |
| 10 | 1 | Partial Live Load | 0.0000 | 0.0853 | 0.0734 | -0.0853 | -0.0734 | 0.0000 | 0.0000 | -0.0853 |
| 10 | 1 | Partial Live Load | 0.0000 | 0.0853 | 0.0734 | -0.0853 | -0.0734 | 0.0000 | 0.0000 | -0.0853 |
| 10 | 1 | Partial Live Load | 0.0000 | 0.0853 | 0.0734 | -0.0853 | -0.0734 | 0.0000 | 0.0000 | -0.0853 |
| 10 | 1 | Partial Live Load | 0.0000 | 0.0879 | 0.0760 | -0.0879 | -0.0760 | 0.0000 | 0.0000 | -0.0879 |
| 10 | 1 | Remove Long | 0.0000 | 0.0879 | 0.0760 | -0.0879 | -0.0760 | 0.0000 | 0.0000 | -0.0879 |
| 10 | 1 | Remove Long | 0.0000 | 0.0879 | 0.0760 | -0.0879 | -0.0760 | 0.0000 | 0.0000 | -0.0879 |
| 10 | 1 | Remove Long | 0.0000 | 0.0879 | 0.0760 | -0.0879 | -0.0760 | 0.0000 | 0.0000 | -0.0879 |
| 10 | 1 | Remove Long | 0.0000 | 0.0879 | 0.0760 | -0.0879 | -0.0760 | 0.0000 | 0.0000 | -0.0879 |
| 10 | 1 | Remove Long | 0.0000 | 0.0853 | 0.0734 | -0.0853 | -0.0734 | 0.0000 | 0.0000 | -0.0853 |
| 10 | 1 | Long Term | 0.0000 | 0.0853 | 0.0734 | -0.0853 | -0.0734 | 0.0000 | 0.0000 | -0.0853 |
| 10 | 1 | Long Term | 0.0000 | 0.0853 | 0.0734 | -0.0853 | -0.0734 | 0.0000 | 0.0000 | -0.0853 |
| 10 | 1 | Long Term | 0.0000 | 0.0853 | 0.0734 | -0.0853 | -0.0734 | 0.0000 | 0.0000 | -0.0853 |
| 10 | 1 | Long Term | 0.0000 | 0.0853 | 0.0734 | -0.0853 | -0.0734 | 0.0000 | 0.0000 | 0.0853 |
| 10 | 1 | Long Term | 0.0000 | 0.1062 | 0.0943 | -0.1062 | -0.0943 | 0.0000 | 0.0000 | 0.1062 |
| 10 | 1 | Long Term | 0.0000 | 0.1115 | 0.0996 | -0.1115 | -0.0996 | 0.0000 | 0.0000 | 0.1115 |
| 10 | 1 | Long Term | 0.0000 | 0.1604 | 0.1455 | -0.1604 | -0.1455 | 0.0000 | 0.0000 | 0.1604 |
| 10 | 1 | Strength Check: | 0.0000 | 0.0853 | 0.0734 | -0.0853 | -0.0734 | 0.0000 | 0.0000 | 0.0853 |
| 10 | 1 | Strength Check: | 0.0000 | 0.0853 | 0.0734 | -0.0853 | -0.0734 | 0.0000 | 0.0000 | 0.0853 |
| 10 | 1 | Strength Check: | 0.0000 | 0.0853 | 0.0734 | -0.0853 | -0.0734 | 0.0000 | 0.0000 | 0.0853 |
| 10 | 1 | Strength Check: | 0.0000 | 0.0853 | 0.0734 | -0.0853 | -0.0734 | 0.0000 | 0.0000 | 0.0853 |
| 10 | 1 | Strength Check: | 0.0000 | 0.0853 | 0.0734 | -0.0853 | -0.0734 | 0.0000 | 0.0000 | -0.0853 |
| 10 | 1 | Strength Check: | 0.0000 | 0.1604 | 0.1455 | -0.1604 | -0.1455 | 0.0000 | 0.0000 | 0.1604 |
| 10 | 2 | Set Precast In | 0.0000 | 0.0000 | 0.0000 | 0.0000 | 0.0000 | 0.0000 | 0.0000 | 0.0000 |
| 10 | 2 | Set Precast In | 0.0000 | 0.0000 | 0.0000 | 0.0000 | 0.0000 | 0.0000 | 0.0000 | 0.0000 |
| 10 | 2 | Tension PT: | 0.0000 | 0.0000 | 0.0000 | 0.0000 | 0.0000 | 0.0000 | 0.0000 | 0.0000 |
| 10 | 2 | Tension PT: | 0.0000 | 0.0000 | 0.0000 | 0.0000 | 0.0000 | 0.0000 | 0.0000 | 0.0000 |
| 10 | 2 | Tension PT: | 0.0000 | 0.0000 | 0.0000 | 0.0000 | 0.0000 | 0.0000 | 0.0000 | 0.0000 |
| 10 | 2 | Tension PT: | 0.0000 | 0.0000 | 0.0000 | 0.0000 | 0.0000 | 0.0000 | 0.0000 | 0.0000 |
| 10 | 2 | Tension PT: | 0.0000 | 0.0000 | 0.0000 | 0.0000 | 0.0000 | 0.0000 | 0.0000 | 0.0000 |

## RESULT : Member Stresses

| Member | Station | Result Case | (P/A) @ Centroid (kips/in²) | Normal Stress @ Point 1 (kips/in²) | Normal Stress @ Point 2 (kips/in²) | Normal Stress @ Point 3 (kips/in²) | Normal Stress @ Point 4 (kips/in²) | Normal Stress @ Point 5 | Normal Stress @ Point 6 | Max ABS Total Stress (kips/in²) |
|---|---|---|---|---|---|---|---|---|---|---|
| 10 | 2 | Add | 0.0000 | 0.0000 | 0.0000 | 0.0000 | 0.0000 | 0.0000 | 0.0000 | 0.0000 |
| 10 | 2 | Add | 0.0000 | 0.0000 | 0.0000 | 0.0000 | 0.0000 | 0.0000 | 0.0000 | 0.0000 |
| 10 | 2 | Add | 0.0000 | 0.0000 | 0.0000 | 0.0000 | 0.0000 | 0.0000 | 0.0000 | 0.0000 |
| 10 | 2 | Add | 0.0000 | 0.0000 | 0.0000 | 0.0000 | 0.0000 | 0.0000 | 0.0000 | 0.0000 |
| 10 | 2 | Add | 0.0000 | 0.0000 | 0.0000 | 0.0000 | 0.0000 | 0.0000 | 0.0000 | 0.0000 |
| 10 | 2 | Backfill to Grade: | 0.0000 | 0.0000 | 0.0000 | 0.0000 | 0.0000 | 0.0000 | 0.0000 | 0.0000 |
| 10 | 2 | Backfill to Grade: | 0.0000 | 0.0000 | 0.0000 | 0.0000 | 0.0000 | 0.0000 | 0.0000 | 0.0000 |
| 10 | 2 | Backfill to Grade: | 0.0000 | 0.0000 | 0.0000 | 0.0000 | 0.0000 | 0.0000 | 0.0000 | 0.0000 |
| 10 | 2 | Backfill to Grade: | 0.0000 | 0.0000 | 0.0000 | 0.0000 | 0.0000 | 0.0000 | 0.0000 | 0.0000 |
| 10 | 2 | Backfill to Grade: | 0.0000 | 0.0000 | 0.0000 | 0.0000 | 0.0000 | 0.0000 | 0.0000 | 0.0000 |
| 10 | 2 | Backfill to Grade: | 0.0000 | 0.0000 | 0.0000 | 0.0000 | 0.0000 | 0.0000 | 0.0000 | 0.0000 |
| 10 | 2 | Pave: Pave: | 0.0000 | 0.0000 | 0.0000 | 0.0000 | 0.0000 | 0.0000 | 0.0000 | 0.0000 |
| 10 | 2 | Pave: Pave: | 0.0000 | 0.0000 | 0.0000 | 0.0000 | 0.0000 | 0.0000 | 0.0000 | 0.0000 |
| 10 | 2 | Pave: Pave: PT | 0.0000 | 0.0000 | 0.0000 | 0.0000 | 0.0000 | 0.0000 | 0.0000 | 0.0000 |
| 10 | 2 | Pave: Pave: | 0.0000 | 0.0000 | 0.0000 | 0.0000 | 0.0000 | 0.0000 | 0.0000 | 0.0000 |
| 10 | 2 | Pave: Pave: step | 0.0000 | 0.0000 | 0.0000 | 0.0000 | 0.0000 | 0.0000 | 0.0000 | 0.0000 |
| 10 | 2 | Open Bridge to | 0.0000 | 0.0000 | 0.0000 | 0.0000 | 0.0000 | 0.0000 | 0.0000 | 0.0000 |
| 10 | 2 | Open Bridge to | 0.0000 | 0.0000 | 0.0000 | 0.0000 | 0.0000 | 0.0000 | 0.0000 | 0.0000 |
| 10 | 2 | Open Bridge to | 0.0000 | 0.0000 | 0.0000 | 0.0000 | 0.0000 | 0.0000 | 0.0000 | 0.0000 |
| 10 | 2 | Open Bridge to | 0.0000 | 0.0000 | 0.0000 | 0.0000 | 0.0000 | 0.0000 | 0.0000 | 0.0000 |
| 10 | 2 | Open Bridge to | 0.0000 | 0.0000 | 0.0000 | 0.0000 | 0.0000 | 0.0000 | 0.0000 | 0.0000 |
| 10 | 2 | Open Bridge to | 0.0000 | 0.0000 | 0.0000 | 0.0000 | 0.0000 | 0.0000 | 0.0000 | 0.0000 |
| 10 | 2 | Partial Live Load | 0.0000 | 0.0000 | 0.0000 | 0.0000 | 0.0000 | 0.0000 | 0.0000 | 0.0000 |
| 10 | 2 | Partial Live Load | 0.0000 | 0.0000 | 0.0000 | 0.0000 | 0.0000 | 0.0000 | 0.0000 | 0.0000 |
| 10 | 2 | Partial Live Load | 0.0000 | 0.0000 | 0.0000 | 0.0000 | 0.0000 | 0.0000 | 0.0000 | 0.0000 |
| 10 | 2 | Partial Live Load | 0.0000 | 0.0000 | 0.0000 | 0.0000 | 0.0000 | 0.0000 | 0.0000 | 0.0000 |
| 10 | 2 | Partial Live Load | 0.0000 | 0.0000 | 0.0000 | 0.0000 | 0.0000 | 0.0000 | 0.0000 | 0.0000 |
| 10 | 2 | Remove Long | 0.0000 | 0.0000 | 0.0000 | 0.0000 | 0.0000 | 0.0000 | 0.0000 | 0.0000 |
| 10 | 2 | Remove Long | 0.0000 | 0.0000 | 0.0000 | 0.0000 | 0.0000 | 0.0000 | 0.0000 | 0.0000 |
| 10 | 2 | Remove Long | 0.0000 | 0.0000 | 0.0000 | 0.0000 | 0.0000 | 0.0000 | 0.0000 | 0.0000 |
| 10 | 2 | Remove Long | 0.0000 | 0.0000 | 0.0000 | 0.0000 | 0.0000 | 0.0000 | 0.0000 | 0.0000 |
| 10 | 2 | Remove Long | 0.0000 | 0.0000 | 0.0000 | 0.0000 | 0.0000 | 0.0000 | 0.0000 | 0.0000 |
| 10 | 2 | Long Term | 0.0000 | 0.0000 | 0.0000 | 0.0000 | 0.0000 | 0.0000 | 0.0000 | 0.0000 |
| 10 | 2 | Long Term | 0.0000 | 0.0000 | 0.0000 | 0.0000 | 0.0000 | 0.0000 | 0.0000 | 0.0000 |

## RESULT : Member Stresses

| Member | Station | Result Case | (P/A) @ Centroid (kips/in²) | Normal Stress @ Point 1 (kips/in²) | Normal Stress @ Point 2 (kips/in²) | Normal Stress @ Point 3 (kips/in²) | Normal Stress @ Point 4 (kips/in²) | Normal Stress @ Point 5 | Normal Stress @ Point 6 | Max ABS Total Stress (kips/in²) |
|---|---|---|---|---|---|---|---|---|---|---|
| 10 | 2 | Long Term | 0.0000 | 0.0000 | 0.0000 | 0.0000 | 0.0000 | 0.0000 | 0.0000 | 0.0000 |
| 10 | 2 | Long Term | 0.0000 | 0.0000 | 0.0000 | 0.0000 | 0.0000 | 0.0000 | 0.0000 | 0.0000 |
| 10 | 2 | Long Term | 0.0000 | 0.0000 | 0.0000 | 0.0000 | 0.0000 | 0.0000 | 0.0000 | 0.0000 |
| 10 | 2 | Long Term | 0.0000 | 0.0000 | 0.0000 | 0.0000 | 0.0000 | 0.0000 | 0.0000 | 0.0000 |
| 10 | 2 | Long Term | 0.0000 | 0.0000 | 0.0000 | 0.0000 | 0.0000 | 0.0000 | 0.0000 | 0.0000 |
| 10 | 2 | Strength Check: | 0.0000 | 0.0000 | 0.0000 | 0.0000 | 0.0000 | 0.0000 | 0.0000 | 0.0000 |
| 10 | 2 | Strength Check: | 0.0000 | 0.0000 | 0.0000 | 0.0000 | 0.0000 | 0.0000 | 0.0000 | 0.0000 |
| 10 | 2 | Strength Check: | 0.0000 | 0.0000 | 0.0000 | 0.0000 | 0.0000 | 0.0000 | 0.0000 | 0.0000 |
| 10 | 2 | Strength Check: | 0.0000 | 0.0000 | 0.0000 | 0.0000 | 0.0000 | 0.0000 | 0.0000 | 0.0000 |
| 10 | 2 | Strength Check: | 0.0000 | 0.0000 | 0.0000 | 0.0000 | 0.0000 | 0.0000 | 0.0000 | 0.0000 |
| 10 | 2 | Strength Check: | 0.0000 | 0.0000 | 0.0000 | 0.0000 | 0.0000 | 0.0000 | 0.0000 | 0.0000 |

## 2. Post-Processing Calculations

T·Y·LIN INTERNATIONAL

Project: PITTSFIELD | Job No. 411762 | Sheet: 1 of 3

Item: STRESS CHECKS | Designer: J. OLUND | Date: 2/28/14

Checker: | Date:

Grid: 1/10"

TENDON STRESS CHECKS:

→ REF: AASHTO 5.9.3

→ USING LOW RELAXATION STRANDS, 0.6" ϕ (0.217 in²)

✓ AASHTO 5.4.4.1

• MAX ALLOWABLE STRESS PRIOR TO ANCHOR SET = $0.9 f_{py} = 0.9(0.9 f_{pu}) = 218.7$ ksi

$(218.7 \text{ ksi}) \cdot (0.217 \text{ in}^2) = 47.4$ kip

→ USING/PROPOSING 42 kip ∴ ok

• MAX ALLOWABLE IMMEDIATELY AFTER ANCHOR SET = $0.70 f_{pu} = 189$ ksi

$(189 \text{ ksi})(0.217 \text{ in}^2) = 41.01$ kip

→ PER LARSA, MAX TENDON FORCE AT ANCHORS AFTER SEATING IS ≈ 38.4 KIPS w/ 1/4" ANCHOR SET ASSUMED ∴ ok

• MAX ALLOWABLE SERVICE STRESS AFTER ALL LOSSES = $0.8 f_{py} = 194.4$ ksi

$194 \text{ ksi} (0.217 \text{ in}^2) = 42.2$ kip

→ MAX TENDON FORCE UNDER SERVICE I CONDITIONS AT 100 YEAR POINT IS ≈ 36.8 KIPS ∴ ok

TENDON STRESSES OK AS PROPOSED

TENSION STRESS LIMIT CHECKS:

→ SERVICE III → TABLES 5.9.4.1.2-1 & 5.9.4.2.2-1

- @ JOINTS, MAX TENSION STRESS = 0 ksi (IN PRECOMPRESSED TENSILE ZONE)
- ELSWHERE = $0.19\sqrt{f'_c}$ = 0.425 ksi*, ASSUMING 5ksi CONCRETE STRENGTH AT TENSIONING TIME

* NEED MILD STEEL TO CONTROL/CARRY THESE STRESSES USING 30ksi MAX STEEL STRESS

→ MODEL LOCATIONS OF INTEREST = • MEMBER 2, STATION 0 } ENDS OF PRECAST ABUTMENTS
• MEMBER 9, STATION 2 } AT WING INTERFACE

• MEMBER 5, STATION 0 } INTERIOR BETWEEN ABUT SECTIONS
• MEMBER 6, STATION 2 }

CONSTRUCTION PHASING STRESSES:

- JOINTS
  → AFTER INITIAL STRESSING, JOINTS BETWEEN WINGS & ABUTS HAVE ~ 15-20 PSI IN TENSION, BUT THIS IS IN A COMPRESSION ZONE IN FINAL-BUILD CONDITION ∴ OK. ALL OTHER JOINT POINTS IN COMPRESSION.

  → AT DAY OF BRIDGE OPENING, ALL JOINTS ARE IN COMPRESSION. MINIMUM STRESS IS 6 PSI COMPRESSION AT WING #1 CONNECTION.
  → OK

  → AT 100 YEAR, END OF LIFE SITUATION, ALL JOINTS (EXCEPT WING 1) ARE IN COMPRESSION. WINGWALL #1 JOINT HAS 0.6 PSI IN TENSION ∴ SAY OK

CONSTRUCTION PHASING STRESSES (CONTINUED):

- ELSEWHERE (LOCATIONS OTHER THAN JOINTS)

→ AT END OF SERVICE, TENSION STRESS ON FRONT OF ABUTMENT AT PILE NEAR WING #1 IS ≈ 0.36 KSI, ≤ 0.425 KSI ∴ OK

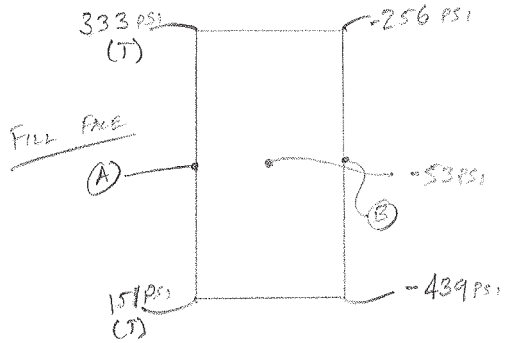


ABUTMENT SECTION WITH MAX TENSION (MEMBER 8, SECTION 2)

$$A = \frac{333 + 151}{2} = 242 \text{ PSI (T)}$$

$$B = \frac{-256 + -439}{2} = -348 \text{ (C)}$$

$$\left(\frac{242}{242 + 348}\right) \cdot 42'' = 17.2'' = \text{NEUTRAL AXIS FROM FILL FACE}$$

TENSION FORCE TO RESIST BY MILD REBAR = $\frac{(8.7' \text{ TALL})(17.2'' \text{ DEEP})(242 \text{ PSI})}{2} = 217.3$ KIPS

@ 30 KSI, NEED 7.24 IN² = $\boxed{\#6\text{'s @ } 6'' \text{ HORIZONTALLY, BACK FACE}}$

COMPRESSION STRESS LIMITS

STRESS LIMIT = $0.45 f'_c$ AFTER LOSSES (5.9.4.2.1-1)

= 2.25 KSI

→ MAX COMPRESSION THROUGHOUT CONSTRUCTION AND SERVICE IS 0.462 KSI < $0.45 f'_c$ ∴ COMPRESSION OK

T·Y·LIN INTERNATIONAL

| | | | |
|---|---|---|---|
| Project: PITTSFIELD | Job No. 411762 | Sheet: 1 of 2 | |
| Item: PT VERIFICATION CALC'S | Designer: J. OLMO | Date: 1/7/14 | |
| | Checker: | Date: | |
| WING WALL 1 | | Grid: 1/10" | |

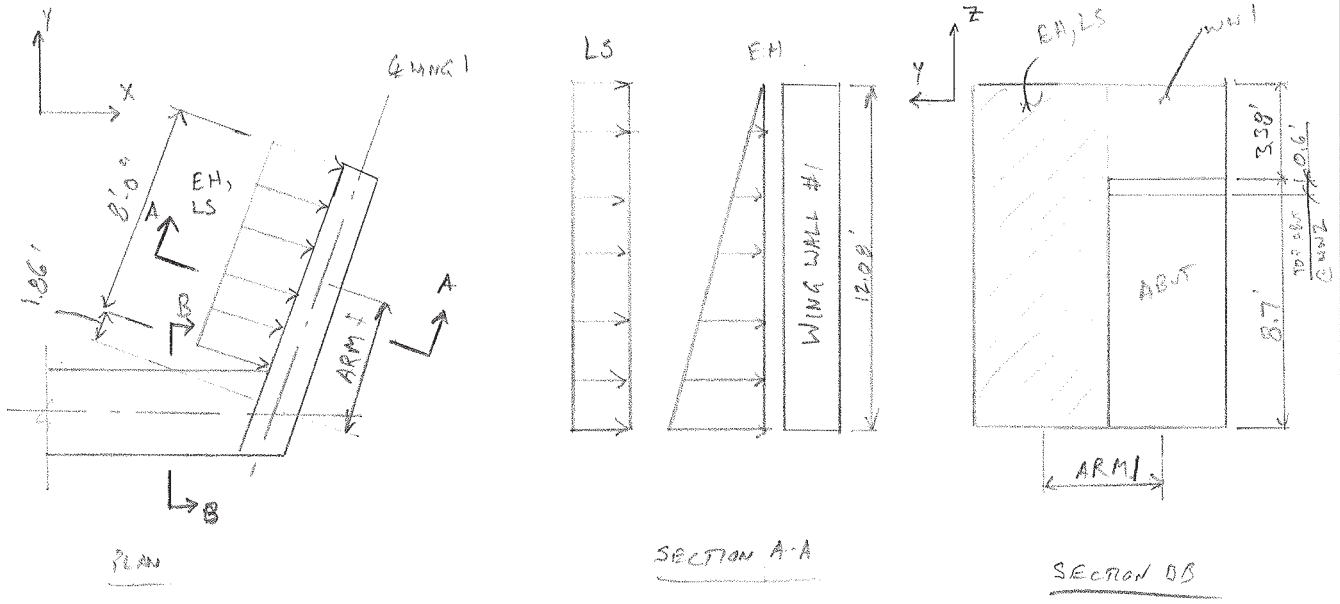


EH:

$K_0 = 0.44$

$EH = \frac{K_0 \gamma^s \cdot 12.08' \cdot 12.08'}{2} \cdot 8.0' = \underline{35.96 \text{ KIP}}$ (TENSION @ JOINT)

$ARM1 = 5.86'$

$M_{ZEH} = 35.96 \text{KIP} \cdot 5.86' = \underline{210.73 \text{ KIP·FT}} = 2528.8 \text{ KIP·IN}$

$M_{YEH} = 35.96 \text{KIP} \left[\frac{12.08'}{3} - \frac{8.7'}{2}\right] = \underline{-11.63 \text{ KIP·FT}} = -139.56 \text{ KIP·IN}$

LS:

$H_{EQ} = 2 \text{FT}$

$LS = 2\text{FT} \cdot 0.14 \text{KCF} \cdot 12.08' \cdot 8' \cdot 0.44 = \underline{11.91 \text{KIP}}$

$M_{ZLS} = LS \cdot ARM1 = \underline{69.8 \text{ KIP·FT}} = 837.6 \text{ KIP·IN}$

$M_{YLS} = LS \cdot (12.08/2 - 8.7/2) = \underline{20.13 \text{ KIP·FT}} = 241.6 \text{ KIP·IN}$

T·Y·LIN INTERNATIONAL

| | | |
|---|---|---|
| Project: PITTSFIELD | Job No. 411 762 | Sheet: 2 of 2 |
| Item: PT VERIFICATION CALC'S | Designer: J. OLUND | Date: 1/8/14 |
| | Checker: | Date: |
| WINGWALL 1 | | Grid: 1/10" |

TENSION ON UPPER, FILL FACE CORNER (SERVICE III):

$$\sigma = \frac{P}{A} + \frac{M_z}{S_z} + \frac{M_y}{S_y}$$

$$S_y = \frac{(3.5')(8.7')^2}{6} = 44.15\,ft^3 = 76{,}295\,in^3$$

$$S_z = \frac{3.5^2 \cdot 8.7}{6} = 17.76\,ft^3 = 30{,}694\,in^3$$

$$A = (3.5')(8.7') = 30.45\,ft^2 = 4{,}385\,in^2$$

$$\sigma = \frac{35.96^k}{4{,}385\,in^2} + \frac{[(1.0)(2{,}528.8\,kip\cdot in) + (0.8)(837.6\,kip\cdot in)]}{30{,}694\,in^3} + \frac{[(1.0)(-139.56\,kip\cdot in) + (0.8)(241.6\,kip\cdot in)]}{76{,}295\,in^3}$$

$$= 0.0082\,ksi + 0.1042\,ksi + 0.0007\,ksi$$

$$= 0.113\,ksi, \text{ TENSION}$$

EQUIVALENT PT NEEDS:

→ ASSUME BALANCED PT LAYOUT & 60% GUTS

$$A_{ps} = \frac{0.113\,ksi\,(4385\,in^2)}{0.6(270\,ksi)} = 3.05\,in^2 \equiv 14 \sim 0.6''\phi \text{ STRANDS (7 EA FACE)}$$

→ CHECK 6 STRANDS ON FILL FACE & 2 ON FRONT, BALANCED VERTICALLY:
PT FORCE = (0.6)(0.217 in²)(270) =

$$ecc = \frac{2.6'' + 6 \cdot 36''}{8} = 28.5'' \text{ FROM FRONT, } 7.5'' \text{ FROM CENTER}$$

$$\sigma_{PT} = \left[\frac{8 \cdot 35.1\,kip}{4385\,in^2} + \frac{8 \cdot 35.1\,kip \cdot 7.5'}{30{,}694\,in^3}\right] = 133\,PSI$$

∴ 6 & 2 PT LAYOUT SEEMS REASONABLE FOR SERVICE

→ CHECK STRENGTH

T·Y·LIN INTERNATIONAL

| | | | |
|---|---|---|---|
| Project: PITTSFIELD | Job No. 411762 | Sheet: 1 of | |
| Item: CONSTRUCTION LOADS | Designer: J. OLUND | Date: 2/27/14 | |
| EH + LS ON WINGS | Checker: | Date: | |
| | | Grid: 1/10" | |

→ ASSUME ABUTMENTS BACKFILLED TO ½ FT BELOW BRIDGE SEAT

→ ASSUME 200 TON CRANE (USE LINKBELT HC-248H) AND USE CLEAR DIST. BETWEEN WINGWALL & OUTRIGGER PAD

→ USE AT-REST PRESSURE ($K_o = 0.44$)

→ DETERMINE LATERAL SURCHARGE IN ACCORDANCE WITH AASHTO FIG 3.11.6.3.1 & 11.10.10.1-1

→ IGNORE PASSIVE PRESSURE ON EXTERIOR WALL FACE

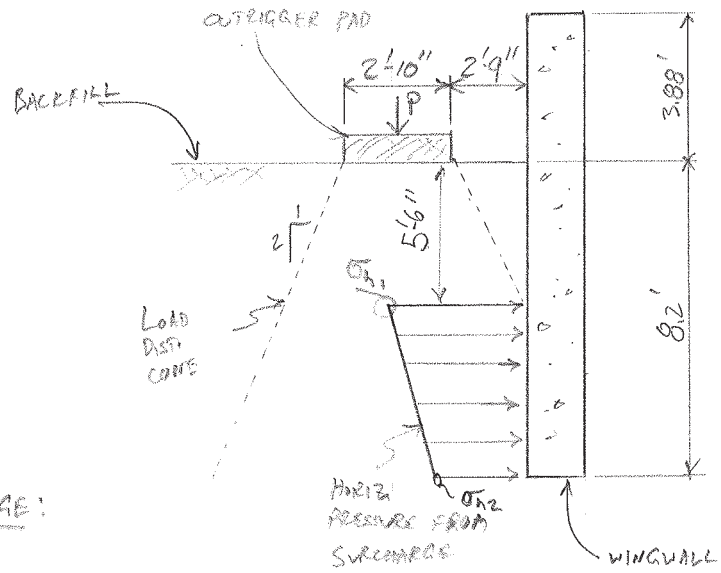


CONSTRUCTION SURCHARGE:

P = 201 KIP (SEE NEXT PAGE)

$$\sigma_{h_1} = K_o \sigma_{v_1} = K_o \cdot \left[ \frac{P}{2.83' + 5.5'} \cdot \frac{1}{2.83' + 5.5'} \right] = \frac{K_o \cdot P}{69.4\,sf} = 1.27\,ksf$$

$$\sigma_{h_2} = K_o \sigma_{v_2} = K_o \cdot \left[ \frac{P}{2.83' + 8.2'} \cdot \frac{1}{\frac{2.83' + 8.2'}{2} + 4.17'} \right] = \frac{K_o \cdot P}{106.8\,sf} = 0.83\,ksf$$

EQUIVALENT SURCHARGE ON TOTAL WALL HEIGHT = $\left[ \frac{\sigma_{h_1} + \sigma_{h_2}}{2} \cdot 2.7 \right] \cdot \frac{1}{12.08'}$

$= \underline{0.234\,ksf}$

$= \underline{21.9\,kip\ TOTAL}$

2.7'

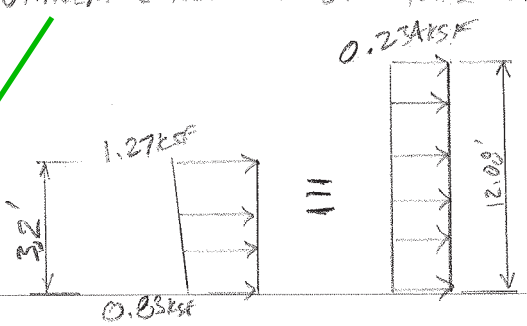

T·Y·LIN INTERNATIONAL

| | | |
|---|---|---|
| Project: Pittsfield | Job No. 41762 | Sheet: 2 of |
| Item: Construction Loads | Designer: J. Olund | Date: 2/27/14 |
| EH + LS on Wings | Checker: | Date: |
| | | Grid: 1/10" |

CRANE OUTRIGGER LOAD:

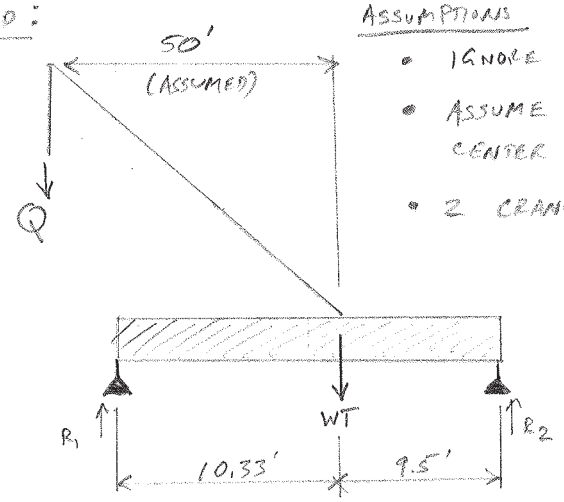


CRANE DIAGRAM

ASSUMPTIONS

- IGNORE FRONT BUMPER OUTRIGGERS
- ASSUME CRANE C.G. IS AT CENTER OF MAST ROTATION
- 2 CRANES FOR BEAM PICK

WT = 232.4 KIP

NEXT BEAM WT ≈ 1.75 KLF

$Q = 1.75\,\text{KLF} \cdot \frac{79'}{2} = 69.1\,\text{KIP}$

Total Weight =73.59 tons. NEXT D BEAM Shop Drawings: Page NB1
Q= 73.59 kips

$R_1 = \frac{(WT)\cdot 9.5'}{9.5' + 10.33'} + \frac{Q\cdot(50' + 9.5')}{10.33' + 9.5'}$

$R_1 = 111.3\,\text{KIP} + 207\,\text{KIP} = 318\,\text{KIP}$

→ NOTE: REAR OUTRIGGERS IN TENSION
∴ UNSTABLE

→ SET $R_1 = 232.4\,\text{KIP} + 69.1\,\text{KIP} = 301.5\,\text{KIP}$

→ USE $\frac{1}{3}/\frac{2}{3}$ SPLIT FOR FRONT OUTRIGGERS

OUTRIGGER LOAD = $\frac{2}{3}(301.5\,\text{KIP}) = 201\,\text{KIP}$

ok... Tables are available for max pick angle for this crane to determine the actual outrigger load.

The max outrigger capacity for this crane is 252 kip, so the surcharge design is essentially based on 80% of the crane capacity. The above design uses a 200 ton crane and Cold River Bridges has noted that only 160 ton cranes are needed, or 80% of the equipment capacity above. The value is therefore considered reasonable for use in calculations considering an erection sequence is not finalized yet and will need to be worked around these constraints.

AT-REST PRESSURE (CONSTRUCTION):

$$EH = K_o \cdot \gamma_{soil} \cdot \frac{(8.2')^2}{2} \cdot (7.73' \text{ EXPOSED WALL LENGTH})$$

$$= 16.01 \text{ KIP TOTAL}$$

CONSTRUCTION FACTORED LOADS:

STR I = 1.35EH + 1.75 LS = 59.93 KIP

SER III = 1.0 EH + 0.8 LS = 33.5 KIP

IN-SERVICE FACTORED LOADS:

$$EH = K_o \cdot \gamma_{soil} \cdot \frac{(12.08')^2}{2} \cdot 7.73' = 34.75 \text{ KIP TOTAL}$$

$$LS = K_o \cdot 2' \cdot \gamma_{soil} \cdot 12.08' \cdot 7.73' = 11.50 \text{ KIP TOTAL}$$

STR I = 1.35EH + 1.75 LS = 67.04 KIP

SER III = 1.0 EH + 0.8 LS = 43.9 KIP

→ FINAL, IN-SERVICE CONDITIONS CONTROL OVER CONSTRUCTION LOADS ∴ NO NEED TO INVESTIGATE STRUCTURAL DESIGN WITH CONSTRUCTION LOADS.

→ KEEP OUTRIGGERS ≥ 2.75' CLEAR OF WALL

Link-Belt
CONSTRUCTION EQUIPMENT

# Specifications

Hydraulic Lattice Boom Truck Crane

# HC-248H

## 200-Ton *(181.50 metric ton)*

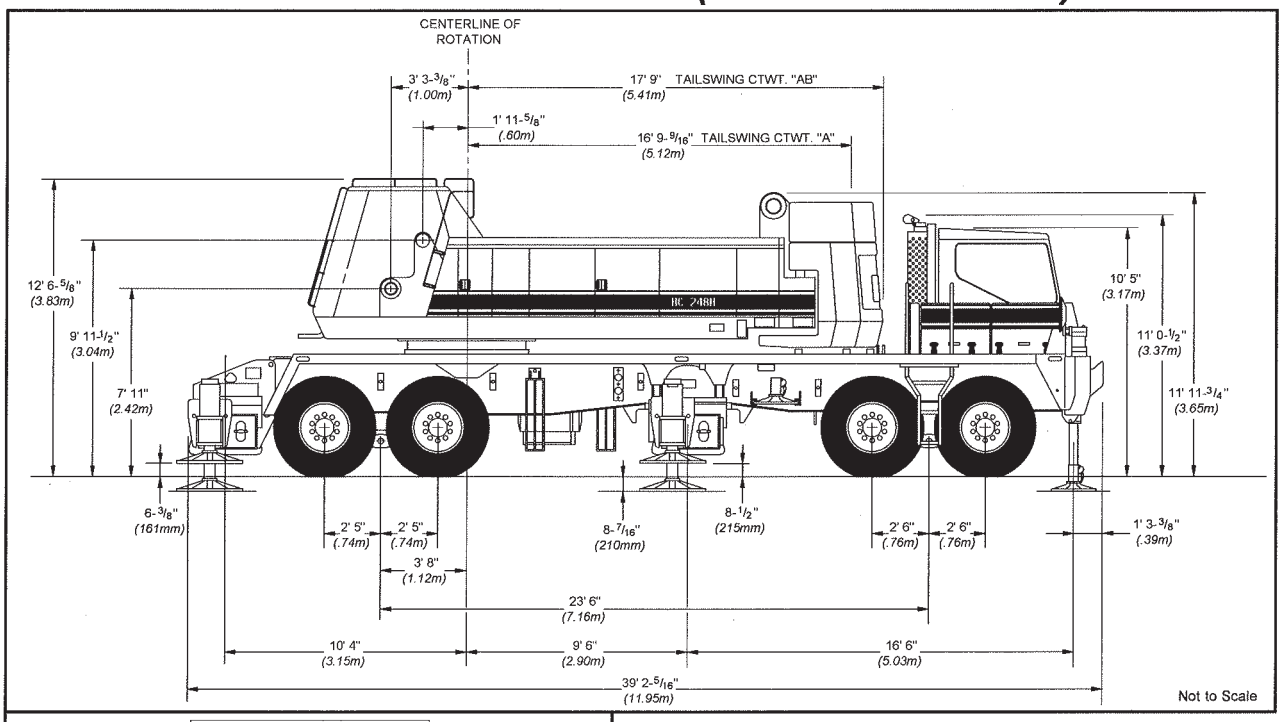


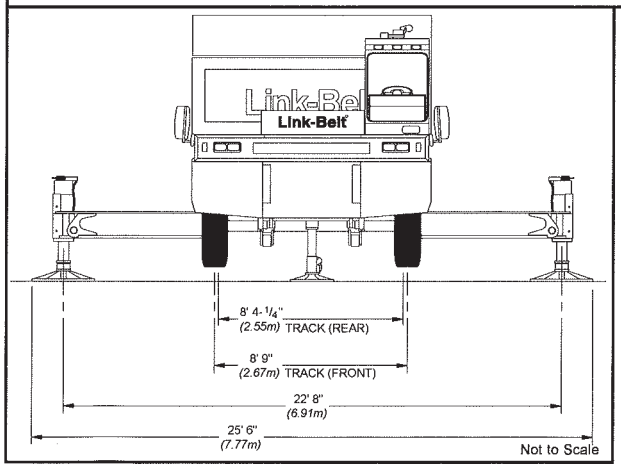


| General dimensions | Feet | meters |
|---|---|---|
| Overall width, outriggers retracted (floats removed) | 11' 0" | 3.35 |
| Minimum ground clearance (at bottom of front bogie beam) | 11" | .28 |
| Ground clearance under counterweight with machine on tires | 5' 8.75" | 1.75 |
| Overall cab width (upper) | 11' 0" | 3.35 |
| Radius of boom hinge pin | 3' 3.4" | 1.00 |
| Vehicle turning diameter - Centerline outside front tire | 106' | 32.30 |
| Vehicle turning diameter - Outside of outer front tire (curb clearance) | 107' 3" | 32.69 |
| Vehicle clearance over front bumper | 111' 8" | 34.03 |
| Vehicle clearance over "A" front bumper ctwt | 113' 2" | 34.49 |
| Vehicle clearance over "AB" front bumper ctwt | 113' 10" | 34.70 |

Litho in U.S.A 11/98
#5272



This information is for reference use only. Operators manual should be consulted and adhered to.

Link-Belt
CONSTRUCTION EQUIPMENT

| Axle | Maximum Allowable Load @ 65 mph (105 km/hr) |
|---|---|
| Front | 43,660 lbs *(19804 kg)* |
| Rear | 85,840 lbs *(38936 kg)* |

# Axle Loads

| **Base machine:** Standard revolving upperstructure equipped with Isuzu engine, hydraulic backstops, mast, bridle, bail, boomhoist rope with mast to rear of upper and 1,050' (320 m) of front drum rope; Standard carrier equipped with Detroit Diesel Series 60 engine, manual transmission, aluminum fenders, 14R24 front and rear radial tires, full fuel and front center hydraulic jack. | Gross Vehicle Weight | | Upper Facing Rear | | | | Upper Facing Front | | | |
|---|---|---|---|---|---|---|---|---|---|---|
| | | | Front Axle | | Rear Axle | | Front Axle | | Rear Axle | |
| | lbs | *kg* | lbs | *kg* | lbs | *kg* | lbs | *kg* | lbs | *kg* |
| | 93,167 | *42273* | 43,933 | *19928* | 49,264 | 22346 | 17,606 | *7986* | 75,591 | 34288 |
| Add Rear Outrigger Box | 13,160 | *5969* | -3,620 | *-1642* | 16,780 | *7611* | -3,620 | *-1642* | 16,780 | *7611* |
| Add Front Outrigger Box | 11,960 | 5425 | 6,830 | *3098* | 5,130 | *2327* | 6,830 | *3098* | 5,130 | *2327* |
| Add Main Outrigger Floats to Storage Racks | 660 | *299* | 230 | *104* | 430 | *195* | 230 | *104* | 430 | *195* |
| Add Bumper Outrigger Float to Storage Rack | 80 | *36* | 60 | *27* | 20 | *9* | 60 | *27* | 20 | *9* |
| ~~Replace Std Front Tires with 14.00 x 24 Bias Tires~~ | ~~-130~~ | *-59* | -130 | *-59* | 0 | *0* | -130 | *-59* | 0 | *0* |
| Add Pusher/Lift Axle (Consult factory for effects on axle groups) | 2,250 | *1021* | | | | | | | | |
| Add "A" Bumper Counterweight | 13,500 | *6123* | 17,718 | *8037* | -4,218 | *-1913* | 17,718 | *8037* | -4,218 | *-1913* |
| Add "B" Bumper Counterweight | 11,500 | *5216* | 15,625 | *7087* | -4,125 | *-1871* | 15,625 | *7087* | -4,125 | *-1871* |
| Add "C" Bumper Counterweight | 10,000 | *4536* | 13,348 | *6054* | -3,348 | *-1518* | 13,348 | *6054* | -3,348 | *-1518* |
| Add Driver to Carrier Cab | 220 | *100* | 245 | *111* | -25 | *-11* | 245 | *111* | -25 | *-11* |
| ~~Remove 1,050 ft of Wire Rope from Front Drum~~ | ~~-1,940~~ | -880 | -668 | *-303* | -1,272 | *-577* | 63 | *29* | -2,003 | *-909* |
| ~~Add 850 ft of Wire Rope to Rear Drum~~ | ~~-1,700~~ | *771* | 887 | *402* | 813 | *369* | -357 | *-162* | 2,057 | *933* |
| ~~Remove Mast, Bridle, Bail & Boom Hoist Rope~~ | ~~-7,614~~ | *-3454* | -6,342 | *-2877* | -1,272 | *-577* | 3,966 | *1799* | -11,580 | *-5253* |
| ~~Remove Boom Foot Pin Puller~~ | ~~-320~~ | *-145* | -5 | *-2* | -315 | *-143* | -95 | *-45* | -225 | *-102* |
| Flip Mast to Front of the Upper | 0 | *0* | 9,101 | *4128* | 9,101 | *4128* | 9,101 | *4128* | -9,101 | *-4128* |
| Replace hydraulic backstops w/ rigid (mast over front of upper) | 0 | 0 | 9,101 | *4128* | 9,101 | *4128* | 9,101 | *4128* | 9,101 | *4128* |
| Add "A" Upper Counterweight | 23,000 | *10433* | 18,639 | *8455* | 4,361 | *1978* | -11,462 | *5199* | 34,462 | *15632* |
| Add "B" Upper Counterweight | 19,330 | *8768* | 16,798 | *7619* | 2,532 | *1149* | -10,766 | *-4833* | 30,096 | *13651* |
| Add "C" Upper Counterweight | 21,110 | *9575* | 17,422 | *7903* | 3,688 | *1673* | -10,835 | *-4915* | 31,945 | *14490* |
| Add 20 ft. Lattice Base Section | 4,647 | 2108 | -1,822 | -826 | 6,469 | 2934 | | | | |
| Add 850 ft Type RB 1' rope to third drum | 2,350 | 1066 | -761 | -345 | 3,111 | 1411 | | | | |
| Add 1050 ft Type RB 1' rope to third drum | 2,280 | *1034* | -598 | *-271* | 2,443 | *1108* | | | | |
| Add third drum deflector sheave assembly | 600 | *272* | -462 | *-210* | 1,062 | *482* | | | | |
| Add 10 ft Lattice Extension w/ Lifting Sheaves | 2,574 | *1168* | 2,765 | *1254* | 5,339 | *2422* | | | | |

TOTAL WEIGHT = 232.4 KIP



BIGGE This information is for reference use only. Operators manual should be consulted and adhered to. BIGGE

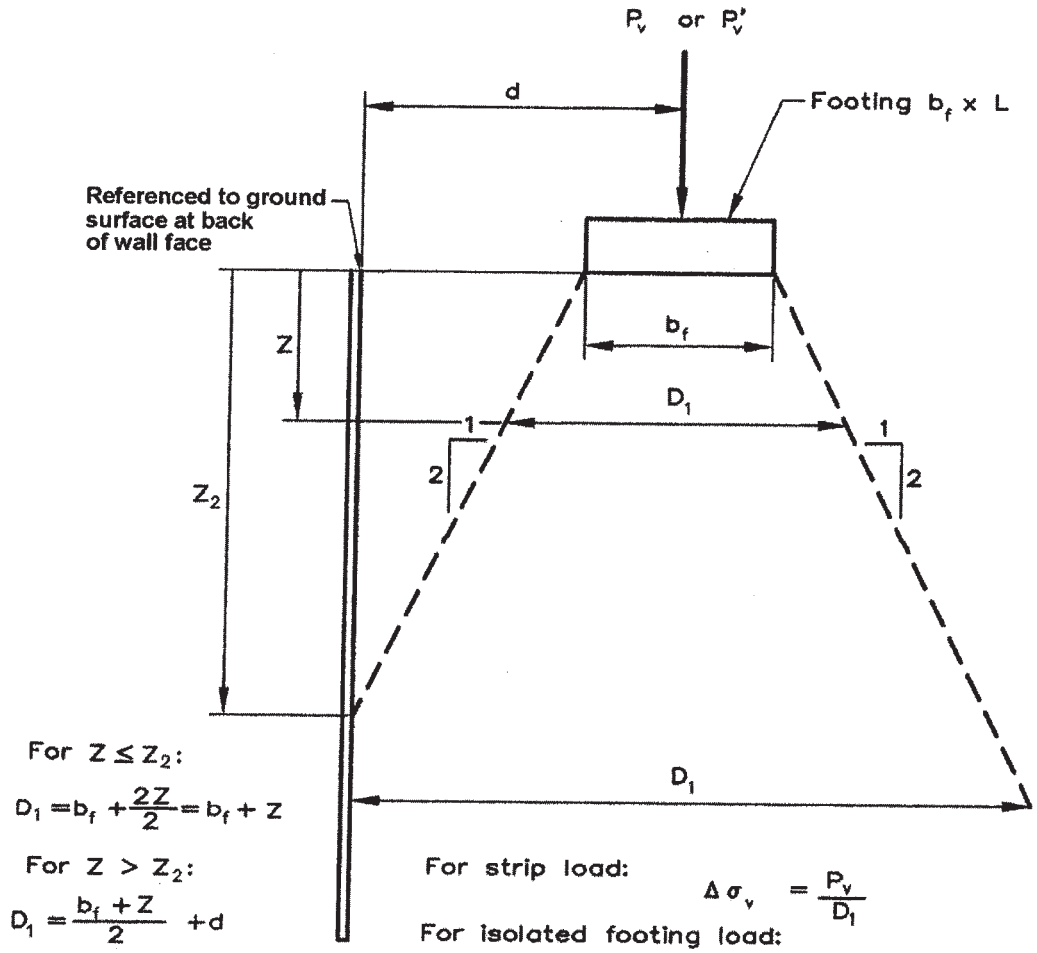


For $Z \le Z_2$:

$$D_1 = b_f + \frac{2Z}{2} = b_f + Z$$

For $Z > Z_2$:

$$D_1 = \frac{b_f + Z}{2} + d$$

For strip load:

$$\Delta\sigma_v = \frac{P_v}{D_1}$$

For isolated footing load:

$$\Delta\sigma_v = \frac{P_v'}{D_1(L+Z)}$$

For point load:

$$\Delta\sigma_v = \frac{P_v'}{D_1^2} \text{ with } b_f = 0$$

Where: $D_1$ = Effective width of applied load at any depth, calculated as shown above

$b_f$ = Width of applied load. For footings which are eccentrically loaded (e.g., bridge abutment footings), set $b_f$ equal to the equivalent footing width B' by reducing it by 2e', where e' is the eccentricity of the footing load (i.e., $b_f - 2e'$).

L = Length of footing

$P_v$ = Load per linear foot of strip footing

$P_v'$ = Load on isolated rectangular footing or point load

$Z_2$ = depth where effective width intersects back of wall face = $2d - b_f$

d = distance between the centroid of the concentrated vertical load and the back of the wall face.

Assume the increased vertical stress due to the surcharge load has no influence on stresses used to evaluate internal stability if the surcharge load is located behind the reinforced soil mass. For external stability, assume the surcharge has no influence if it is located outside the active zone behind the wall.

**Figure 3.11.6.3-1—Distribution of Stress from Concentrated Vertical Load $P_v$ for Internal and External Stability Calculations**

© 2012 by the American Association of State Highway and Transportation Officials.
All rights reserved. Duplication is a violation of applicable law.

## 11.10.10—Special Loading Conditions

### 11.10.10.1—Concentrated Dead Loads

The distribution of stresses within and behind the wall resulting from concentrated loads applied to the wall top or behind the wall shall be determined in accordance with Article 3.11.6.3.

Figure 11.10.10.1-1 illustrates the combination of loads using superposition principles to evaluate external and internal wall stability. Depending on the size and location of the concentrated dead load, the location of the boundary between the active and resistant zones may have to be adjusted as shown in Figure 11.10.10.1-2.

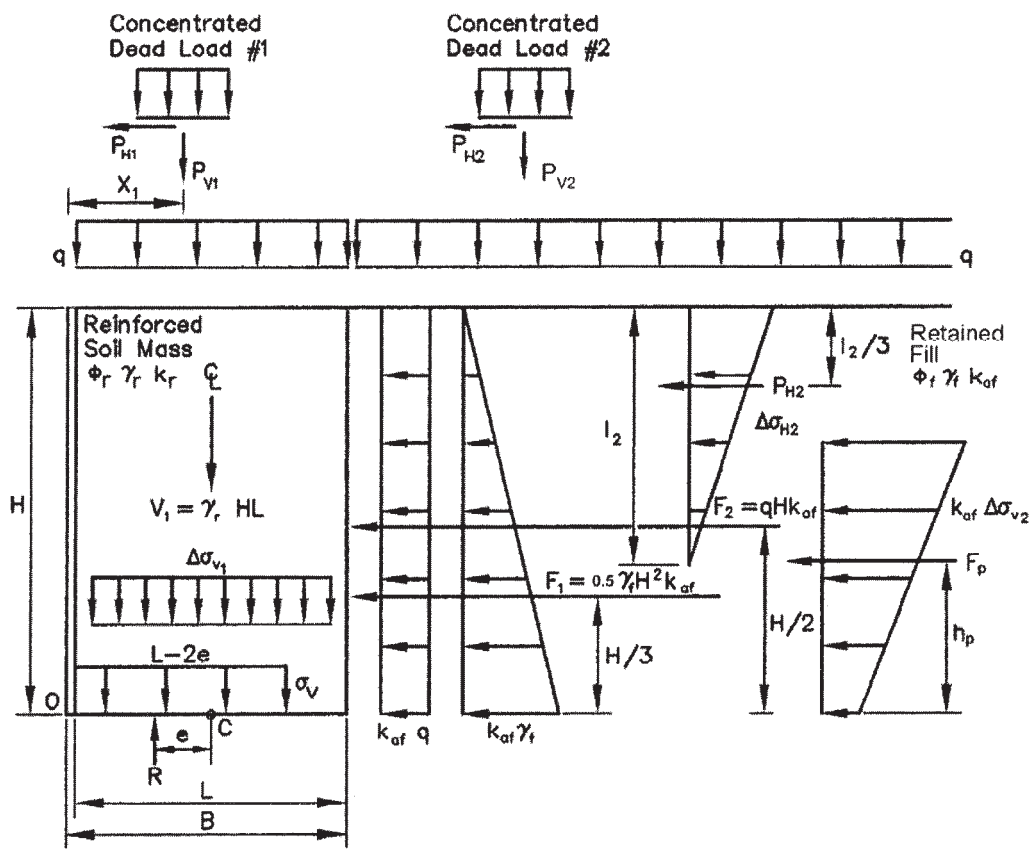


Notes:

These equations assume that concentrated dead load #2 is located within the active zone behind the reinforced soil mass.

For relatively thick facing elements, (e.g., segmental concrete facing blocks), it is acceptable to include the facing dimensions and weight in sliding, overturning, and bearing capacity calculations (i.e., use $B$ in lieu of $L$).

$P_{V1}$, $P_{H1}$, $\Delta\sigma_{v1}$, $\Delta\sigma_{v2}$, $\Delta\sigma_{H2}$, and $l_2$ are as determined from Figures 3.11.6.3-1 and 3.11.6.3-2, and $F_p$ results from $P_{V2}$ (i.e., $K\Delta\sigma_{v2}$ from Figure 3.11.6.3-1. $H$ is the total wall height at the face. $h_p$ is the distance between the centroid of the trapezoidal distribution shown and the bottom of that distribution.

**Figure 11.10.10.1-1—Superposition of Concentrated Dead Loads for External and Internal Stability Evaluation**

T·Y·LIN INTERNATIONAL
engineers | planners | scientists

**PROJECT:** Pittsfield **JOB NO:** 411762.00
**TASK:** Integral Abutment Structural Design
**DESIGN:** Josh Olund **DATE:** 2/28/2014
**CHECK:** **DATE:**

# Integral Abutment: Structural Design

***All calculations are for Abutment No. 1 (Abutment No. 2 similar)***

*Inputs in yellow* *Outputs Bordered*

## Geometry

*Thickness of Abutment Stem* $t_{abut} := 3.5ft$

*Thickness of Return Wingwalls* $t_{wing} := 1.5ft$

*Skew of Bridge* $\theta := 20deg$

*Abutment geometry from geometry MathCAD sheets and CAD.*

$S_{pile} := 8.33333ft$

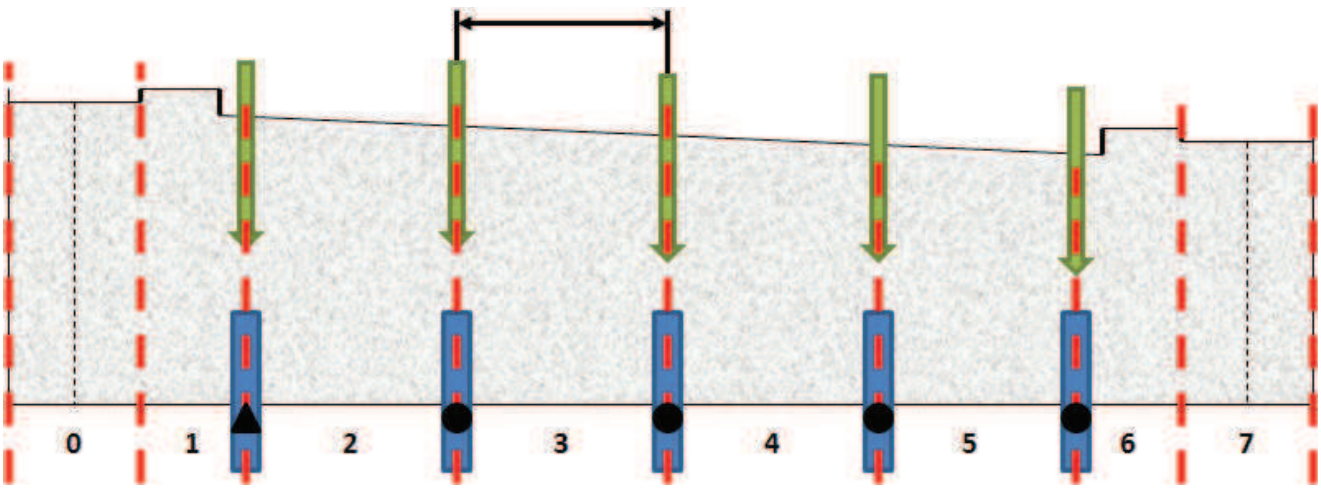


***Lengths:***

$L_{abut_0} := 3.957ft$ $L_{abut_1} := 0ft$ $L_{abut_2} := S_{pile}$ $L_{abut_3} := S_{pile}$ $L_{abut_4} := S_{pile}$ $L_{abut_5} := S_{pile}$ $L_{abut_6} := 0ft$ $L_{abut_7} := 6.710$

***Heights:***

$h_{abut_0} := 11.67ft$ $h_{abut_2} := 11.72ft$ $h_{abut_3} := 11.82ft$ $h_{abut_4} := 11.93ft$ $h_{abut_5} := 12.03ft$ $h_{abut_7} := 12.08ft$

$h_{abut_1} := 11.67ft$ $h_{abut_6} := 12.08ft$

$H_{dia} := 32in + 3in = 2.92\,ft$

*Height of the Closure Pour, above precast abutments*

## Geometry, cont:

*Length of Abutment* $L_{abut.tot} := \sum L_{abut} = 44.00\,ft$

*Length of Wings (from center of abutment)* $L_{wing.1} := 7.229ft + \frac{1.75ft}{\cos(20deg)} = 9.09\,ft$

$L_{wing.2} := 7.729ft + \frac{1.75ft}{\cos(20deg)} = 9.59\,ft$

*Maximum Height of Abutment* $h_{abut.max} := \max(h_{abut}) = 12.08\,ft$

*Number of Girders* $n_{bm} := 8$

*Approach Slab Seat Dimensions* $AS_{seat.h} := 1.25ft$

$AS_{seat.w} := 1ft$

*Height of Construction Jt. above Bottom of Abut* $h_{const.jt} := 8.4ft$

*Length Of Bridge* $L_{bridge} := 78ft$

## Material Properties:

*Unit Weight of Concrete* $\gamma_c := 150pcf$

*Unit Weight of Backfill* $\gamma_s := 140pcf$ *Project Plans*

*Backfill Friction Angle* $\phi_f := 34deg$ *VTrans SDM*

*Rankine $K_p$ equation:* $K_p := \frac{1 + \sin(\phi_f)}{1 - \sin(\phi_f)} = 3.54$ *Use Rankine with 1.0 Load Factor*

*At-Rest Pressure Coefficient* $K_o := 1 - \sin(\phi_f) = 0.44$ *[AASHTO 3.11.5.2-1]*

## Abutment Loads

*Vertical loads from superstucture calculated separately*

***LS: Live Load Surcharge:***

*LL Surcharge Table [AASHTO T 3.11.6.4-1]*

$$LS_{Table} := \begin{array}{c} \begin{array}{cc} \text{About Ht (ft)} & h_{eq}\text{ (ft)} \end{array} \\ \begin{pmatrix} 0 & 4 \\ 5 & 4 \\ 10 & 3 \\ 20 & 2 \\ 50 & 2 \end{pmatrix} \end{array}$$

*Equivalent Heights of Soil at each Location*

$$h_{eq} := \overrightarrow{\text{linterp}\left(LS_{Table}^{\langle 0 \rangle}, LS_{Table}^{\langle 1 \rangle}, \frac{h_{abut}}{ft}\right)} \cdot ft = \begin{pmatrix} 2.83 \\ 2.83 \\ 2.83 \\ 2.82 \\ 2.81 \\ 2.80 \\ 2.79 \\ 2.79 \end{pmatrix} ft$$

*Constant Horizontal Earth Pressure due to Live Load Surcharge*

$$\Delta_p := K_p \cdot \gamma_s \cdot h_{eq} = \begin{pmatrix} 1.40 \\ 1.40 \\ 1.40 \\ 1.40 \\ 1.39 \\ 1.39 \\ 1.38 \\ 1.38 \end{pmatrix} \cdot ksf$$

*Distributed Linear Load of Live Load Surcharge at Each Location*

$$\boxed{W_{LS} := \overrightarrow{\left[\Delta_p \cdot \left(h_{abut} - H_{dia}\right)\right]} = \begin{pmatrix} 1.02 \\ 1.02 \\ 1.03 \\ 1.04 \\ 1.04 \\ 1.05 \\ 1.06 \\ 1.06 \end{pmatrix} \cdot \frac{kip}{in}}$$

## Loads, cont.:

### LS on Wings

*Uniform Loads (2 ft $h_{eq}$) [AASHTO T3.11.6.4-2]*

$$W_{LS.wing.1} := K_o \cdot \gamma_s \cdot 2ft \cdot h_{abut_0} = 0.120 \cdot \frac{kip}{in}$$

$$W_{LS.wing.2} := K_o \cdot \gamma_s \cdot 2ft \cdot h_{abut_7} = 0.124 \cdot \frac{kip}{in}$$

*Application Length Ratio*

$$L_{ratio1} := \left(L_{wing.1} - 1.75 \frac{ft}{\cos(20deg)}\right) \div L_{wing.1} = 0.80$$

$$L_{ratio2} := \left(L_{wing.2} - 1.75 \frac{ft}{\cos(20deg)}\right) \div L_{wing.2} = 0.81$$

### EH: Passive Pressure:

*Distributed Linear Load of Passive Lateral Earth Pressure*

$$W_{EH} := \overrightarrow{\left[K_p \cdot \gamma_s \cdot \left(\frac{h_{abut} + H_{dia}}{2}\right) \cdot \left(h_{abut} - H_{dia}\right)\right]} = \begin{pmatrix} 2.63 \\ 2.63 \\ 2.66 \\ 2.71 \\ 2.76 \\ 2.81 \\ 2.84 \\ 2.84 \end{pmatrix} \cdot \frac{kip}{in}$$

$$a := K_p \cdot \gamma_s \cdot H_{dia}$$

$$b := K_p \cdot \gamma_s \cdot h_{abut}$$

$$R := \overrightarrow{\left[\left(\frac{h_{abut} - H_{dia}}{3}\right) \cdot \frac{(2 \cdot a + b)}{a + b}\right]} = \begin{pmatrix} 3.50 \\ 3.50 \\ 3.52 \\ 3.56 \\ 3.59 \\ 3.63 \\ 3.65 \\ 3.65 \end{pmatrix} ft$$

*Distributed moment along abutment sections - moment arm is the difference between the vertical centers of the precast and the center of the resultant*

$$M_{EH} := \overrightarrow{\left[W_{EH} \cdot \left[R - \frac{\left(h_{abut} - H_{dia}\right)}{2}\right]\right]} = \begin{pmatrix} -27.68 \\ -27.68 \\ -28.15 \\ -29.12 \\ -30.22 \\ -31.23 \\ -31.75 \\ -31.75 \end{pmatrix} \cdot \frac{kip \cdot in}{in}$$

***EH: At Rest Pressure (on Wing):***

*Distributed Linear Load of At Rest Lat. Earth Pressure*

$$W_{EH.wing.1} := K_o \cdot \gamma_s \cdot h_{abut_0} \cdot \frac{h_{abut_0}}{2} = 0.350 \cdot \frac{kip}{in}$$

$$W_{EH.wing.2} := K_o \cdot \gamma_s \cdot h_{abut_7} \cdot \frac{h_{abut_7}}{2} = 0.375 \cdot \frac{kip}{in}$$

*Distributed Moment along member, due to offset between lateral load application point and pressure resultant location*

$$M_{EF.wing.1} := W_{EH.wing.1} \cdot \left(\frac{1}{2} - \frac{1}{3}\right) \cdot h_{abut_0} = 8.17 \cdot \frac{kip \cdot in}{in}$$

$$M_{EF.wing.2} := W_{EH.wing.2} \cdot \left(\frac{1}{2} - \frac{1}{3}\right) \cdot h_{abut_7} = 9.07 \cdot \frac{kip \cdot in}{in}$$

***CT: Collision Force transmitted through soil from guardrail posts to wings***

*There is no specific guidance in the AASHTO code regarding loads from traffic impact on guardrails located adjacent to abutments or wingwalls. Section 11.10.10.2 discusses traffic loads from barriers transmitted to MSE walls and uses a distributed force equal to 2 kips/ft (0.167 kip/in) . This load, applied with the EEII loading case (thus a resistance factor of 1.0 and an LS load factor of 0.5) is not significantly greater than the loads used for the Strength I case and will be ignored.*

## Outputs from LARSA Model

| At Precast Joint | At Fixity Location | Internal (reversible) |
|---|---|---|
| $M_{z.u.jt} := 219kip \cdot ft$ | $M_{z.u.fixity} := 959kip \cdot ft$ | $M_{z.u.int} := 292kip \cdot ft$ |
| $M_{y.u.jt} := 178kip \cdot ft$ | $M_{y.u.fixity} := 791 \cdot kip \cdot ft$ | $M_{y.u.int} := 140kip \cdot ft$ |

*By observation, internal moments will not control*

## Material Properties:

*Concrete Strength of Abutment* $f'_c := 5ksi$

*Concrete compressive stress block coefficeint (AASHTO 5.7.2.2)* $\beta_1 := \max\left[\left[0.85 - 0.05 \cdot \frac{(f'_c - 4ksi)}{1ksi}\right], 0.65\right] = 0.80$

*Rupture Modulus (5.4.2.6)* $f_r := 0.24 \cdot \sqrt{f'_c \cdot ksi} = 0.54 \cdot ksi$

*Modulus of Elasticity of Concrete* $E_c := 1820\sqrt{f'_c \cdot ksi} = 4070 \cdot ksi$

*Yield Strength of Plain Steel Reinforcement* $F_y := 60ksi$

*Modulus of Elasticity of Tendons* $E_{ps} := 28500ksi$

*Ultimate Strength of Tendons* $f_{pu} := 270ksi$

*Yield Strength of Tendons* $f_{py} := 0.9 \cdot f_{pu} = 243.00 \cdot ksi$

*Area of Tendons* $A_{ps} := 8 \cdot 0.217in^2 = 1.74 \cdot in^2$

*Pretensioning steel coefficient (AASHTO C5.7.3.1.1-1)* $k := 0.28$

*Depth to center of post tensioning steel from extreme compression fiber (Moment about Y axis)*

$$d_{p.y} := \frac{9in + 25in + 41in + 57in + 73in + 89in + 25in + 73in}{8} = 49.00 \cdot in$$

*Depth to center of post tensioning steel from extreme compression fiber (Moment about Z axis)*

$$d_{p.z} := \frac{2 \cdot 6in + 6 \cdot 36in}{8} = 28.50 \cdot in$$

*Depth to extreme fiber of post tensioning steel from extreme compression fiber (For moment about Y axis) (Assuming Tendon within center of Duct, OK for a straight duct)*

$$d_{t.y} := 8.7ft - 6in = 98.40 \cdot in$$

*Depth to extreme fiber of post tensioning steel from extreme compression fiber (For moment about Z axis) (Assuming Tendon within center of Duct, OK for a straight duct)*

$$d_{t.z} := t_{abut} - 6in = 36.00 \cdot in$$

## *Check Ultimate Moment*

*Design Height of Abutment* $h_{design} := 8.7ft = 104.40 \cdot in$

*Thickness of Abutment* $t_{abut} = 42.00 \cdot in$

*Gross Section Area* $A_g := h_{design} \cdot t_{abut} = 4384.80 \cdot in^2$

*Gross Section Moment of Inertia (about Y axis)* $I_{g.y} := \frac{h_{design}^3 \cdot t_{abut}}{12} = 3982626.14 \cdot in^4$

*Gross Section Moment of Inertia (about Z axis)* $I_{g.z} := \frac{h_{design} \cdot t_{abut}^3}{12} = 644565.60 \cdot in^4$

*Section Modulus (about Y axis)* $S_{g.y} := \frac{I_{g.y}}{h_{design} \div 2} = 76295.52 \cdot in^3$

*Section Modulus (about Z axis)* $S_{g.z} := \frac{I_{g.z}}{t_{abut} \div 2} = 30693.60 \cdot in^3$

***Plain Steel Reinforcement:***

*Area Steel (resisting Z axis moment) (#6's at 9" in plan set)* $A_{s.z} := Ceil\left(\frac{8.7ft - 2 \cdot 2in}{9in}, 1\right) 0.44in^2 = 5.28 \cdot in^2$

*Area Steel Top and Bottom (resisting Y axis moment) (use single #6 from z-axis compression face)* $A_{s.y} := 0.44in^2 = 0.44 \cdot in^2$

***Design Moments***

*Effective Stress in Post-Tensioning Steel at Section under Consideration, After all Losses (From LARSA)*

$$f_{pe} := \frac{33.9kip \cdot 8}{A_{ps}} = 156.22 \cdot ksi$$

*Distance from Compression Fiber to neutral axis assuming Rectangular-section behavior (AASHTO 5.7.3.1.2-4) (About Y axis)*

$$c_y := \frac{A_{ps} \cdot f_{pu} + A_{s.y} \cdot F_y}{0.85 f'_c \cdot \beta_1 \cdot t_{abut}} = 3.47 \cdot in$$

*Distance from Compression Fiber to neutral axis assuming Rectangular-section behavior (AASHTO 5.7.3.1.2-4) (About Z axis)*

$$c_z := \frac{A_{ps} \cdot f_{pu} + A_{s.z} \cdot F_y}{0.85 f'_c \cdot \beta_1 \cdot h_{design}} = 2.21 \cdot in$$

*Number of Support Hinges Crossed by the Tendon between Anchorages or Discretely Bonded Points*

$$N_s := 0$$

*Effective Tendon Length (AASHTO 5.7.3.1.2-2)*

$$l_e := \frac{2 \cdot L_{abut.tot}}{2 + N_s} = 44.00 ft$$

*Stress in PT at centroid at ultimate moment (AASHTO 5.7.3.1.2-1) (Y axis)*

$$f_{ps.y} := \min\left[f_{pe} + 900 \cdot \left(\frac{d_{p.y} - c_y}{l_e}\right) \cdot ksi, f_{py}\right] = 233.83 \cdot ksi$$

*Stress in PT at centroid at ultimate moment (AASHTO 5.7.3.1.2-1) (Z axis)*

$$f_{ps.z} := \min\left[f_{pe} + 900 \cdot \left(\frac{d_{p.z} - c_z}{l_e}\right) \cdot ksi, f_{py}\right] = 201.03 \cdot ksi$$

***Moment Resistance at Fixity Location:***

*Nominal Moment Resistance*
*(AASHTO 5.7.3.2.2-1) (Moment about Y axis)*

$$M_{n.y.fixity} := A_{ps} \cdot f_{ps.y} \cdot \left( d_{p.y} - \frac{\beta_1 \cdot c_y}{2} \right) + A_{s.y} \cdot F_y \cdot \left[ \left( h_{design} - 3.125in \right) - \frac{\beta_1 \cdot c_y}{2} \right] = 1830.40 \cdot kip \cdot ft$$

*Nominal Moment Resistance*
*(AASHTO 5.7.3.2.2-1) (Moment about Z axis)*

$$M_{n.z.fixity} := A_{ps} \cdot f_{ps.z} \cdot \left( d_{p.z} - \frac{\beta_1 \cdot c_z}{2} \right) + A_{s.z} \cdot F_y \cdot \left[ \left( t_{abut} - 3.125in \right) - \frac{\beta_1 \cdot c_z}{2} \right] = 1806.03 \cdot kip \cdot ft$$

*Resistance Factor, not at joints:*

*Resistance Factor for Prestressed Concrete*
*(AASHTO 5.5.4.2.1) (About Y axis)*

$$\phi_{f.y.fixity} := \min\left[ \max\left[ \left[ 0.583 + 0.25 \cdot \left( \frac{d_{t.y}}{c_y} - 1 \right) \right], 0.75 \right], 1 \right] = 1.0$$

*Resistance Factor for Prestressed Concrete*
*(AASHTO 5.5.4.2.1) (About Z axis)*

$$\phi_{f.z.fixity} := \min\left[ \max\left[ \left[ 0.583 + 0.25 \cdot \left( \frac{d_{t.z}}{c_z} - 1 \right) \right], 0.75 \right], 1 \right] = 1.0$$

*Factored Bending Resistance (About Y axis)*

$$\boxed{M_{r.y.fixity} := \phi_{f.y.fixity} \cdot M_{n.y.fixity} = 1830.40 \cdot kip \cdot ft}$$

*Factored Bending Resistance (About Z axis)*

$$\boxed{M_{r.z.fixity} := \phi_{f.z.fixity} \cdot M_{n.z.fixity} = 1806.03 \cdot kip \cdot ft}$$

***Moment Resistance at Joint Location:***

*Nominal Moment Resistance*
*(AASHTO 5.7.3.2.2-1) (Moment about Y axis)*

$$M_{n.y.joint} := A_{ps} \cdot f_{ps.y} \cdot \left( d_{p.y} - \frac{\beta_1 \cdot c_y}{2} \right) = 1610.65 \cdot kip \cdot ft$$

*Nominal Moment Resistance*
*(AASHTO 5.7.3.2.2-1) (Moment about Z axis)*

$$M_{n.z.joint} := A_{ps} \cdot f_{ps.z} \cdot \left( d_{p.z} - \frac{\beta_1 \cdot c_z}{2} \right) = 803.10 \cdot kip \cdot ft$$

*Resistance Factor, at joints:*

*Resistance Factor for Prestressed Concrete*
*(AASHTO 5.5.4.2.2) (About Y axis)*

$$\phi_{f.y.joint} := 0.9 = 0.90$$

*Resistance Factor for Prestressed Concrete*
*(AASHTO 5.5.4.2.2) (About Z axis)*

$$\phi_{f.z.joint} := 0.9 = 0.90$$

*Factored Bending Resistance (About Y axis)*

$$\boxed{M_{r.y.joint} := \phi_{f.y.joint} \cdot M_{n.y.joint} = 1449.59 \cdot kip \cdot ft}$$

*Factored Bending Resistance (About Z axis)*

$$\boxed{M_{r.z.joint} := \phi_{f.z.joint} \cdot M_{n.z.joint} = 722.79 \cdot kip \cdot ft}$$

***Ultimate Moment Check***

*Load Factor for Prestressing* $\gamma_p := 1.00$

*Axial Load (From Prestressing) (From LARSA)* $P_u := \gamma_p \cdot 8 \cdot 33.8kip = 270.40 \cdot kip$

*Axial Resistance Factor* $\phi_a := 0.75$

*Nominal Axial Resistance* $P_n := f'_c \cdot A_g = 21924.00 \cdot kip$

*Is Factored Axial Load Below Biaxial Threshold? [5.7.4.5]*

$$Check_{Biaxial.fixity} := if\left(P_u \le 0.1 \cdot \phi_a \cdot P_n, \text{"Include Moment Only"}, \text{"Use Axial Expression"}\right) = \text{"Include Moment Only"}$$

*Demand to Capacity Ratio (About Y Axis)* $\dfrac{M_{y.u.fixity}}{M_{r.y.fixity}} = 0.43$

*Demand to Capacity Ratio (About Z Axis)* $\dfrac{M_{z.u.fixity}}{M_{r.z.fixity}} = 0.53$

*Biaxial Bending Demand to Capacity Ratio, Moment Only (AASHTO 5.7.4.5-3)* $Biaxial_{DC.Ratio.fixity} := \dfrac{M_{y.u.fixity}}{M_{r.y.fixity}} + \dfrac{M_{z.u.fixity}}{M_{r.z.fixity}} = 0.96$

$$Check_{M.u.fixity} := if\left(Biaxial_{DC.Ratio.fixity} \le 1.0, \text{"Abutment Ultimate Moment OK"}, \text{"Abutment Ultimate Moment No Good"}\right)$$

$$\boxed{Check_{M.u.fixity} = \text{"Abutment Ultimate Moment OK"}}$$

*Demand to Capacity Ratio (About Y Axis)* $\dfrac{M_{y.u.jt}}{M_{r.y.joint}} = 0.12$

*Demand to Capacity Ratio (About Z Axis)* $\dfrac{M_{z.u.jt}}{M_{r.z.joint}} = 0.30$

*Biaxial Bending Demand to Capacity Ratio, Moment Only (AASHTO 5.7.4.5-3)* $Biaxial_{DC.Ratio.joint} := \dfrac{M_{y.u.jt}}{M_{r.y.joint}} + \dfrac{M_{z.u.jt}}{M_{r.z.joint}} = 0.43$

$$Check_{M.u.joint} := if\left(Biaxial_{DC.Ratio.joint} \le 1.0, \text{"Abutment Ultimate Moment OK"}, \text{"Abutment Ultimate Moment No Good"}\right)$$

$$\boxed{Check_{M.u.joint} = \text{"Abutment Ultimate Moment OK"}}$$

***Minimum Reinforcement Check (5.7.3.3.2)***

*Average Stress in Extreme Tension Fiber due to Post Tensioning, After all Losses (Moment about Y Axis) (From LARSA)*

$$f_{cpe.y} := \frac{(.121 - .006) + (-.016 + .001)}{2} ksi = 0.05 \cdot ksi$$

*Average Stress in Extreme Tension Fiber due to Post Tensioning, After all Losses (Moment about Z Axis) (From LARSA)*

$$f_{cpe.z} := \frac{(.121 - .006) + (.144 - .007)}{2} ksi = 0.13 \cdot ksi$$

*Flexural Cracking Variabliity Factor* $\gamma_1 := 1.6$

*Prestress Variability Factor* $\gamma_2 := 1.0$

*Ratio of Min Yield to Ult. Tensile Strength* $\gamma_3 := 1.0$

*Cracking Moment (About Y Axis)* $M_{cr.y} := \gamma_3 \cdot (\gamma_1 \cdot f_r + \gamma_2 \cdot f_{cpe.y}) \cdot S_{g.y} = 5777.16 \cdot kip \cdot ft$

*Cracking Moment (About Z Axis)* $M_{cr.z} := \gamma_3 \cdot (\gamma_1 \cdot f_r + \gamma_2 \cdot f_{cpe.z}) \cdot S_{g.z} = 2518.54 \cdot kip \cdot ft$

*Factored Ultimate Moment (About Y Axis)* $M_{y.u.fixity} = 791.00 \cdot kip \cdot ft$

*Factored Ultimate Moment (About Z Axis)* $M_{z.u.fixity} = 959.00 \cdot kip \cdot ft$

*Required Minimum Flexural Resistance (About Y Axis)* $\boxed{M_{r.y.min} := \min(M_{cr.y}, 1.33 \cdot M_{y.u.fixity}) = 1052.03 \cdot kip \cdot ft}$

*Required Minimum Flexural Resistance (About Z Axis)* $\boxed{M_{r.z.min} := \min(M_{cr.z}, 1.33 \cdot M_{z.u.fixity}) = 1275.47 \cdot kip \cdot ft}$

*Demand to Capacity Ratio (About Y Axis)* $\frac{M_{r.y.min}}{M_{r.y.fixity}} = 0.57$

*Demand to Capacity Ratio (About Z Axis)* $\frac{M_{r.z.min}}{M_{r.z.fixity}} = 0.71$

$$Check_{Min.Reinf} := \text{if}\left(\frac{M_{r.z.min}}{M_{r.z.fixity}} \le 1.0 \wedge \frac{M_{r.y.min}}{M_{r.y.fixity}} \le 1.0, \text{"Abutment Min. Reinf. OK"}, \text{"Abutment Min. Reinf. No Good"}\right)$$

$$\boxed{Check_{Min.Reinf} = \text{"Abutment Min. Reinf. OK"}}$$

T·Y·LIN INTERNATIONAL

| | | | |
|---|---|---|---|
| Project: PITTSFIELD | Job No. 411762.00 | Sheet: 1 of 5 | |
| Item: BURSTING STEEL | Designer: J. OLUND | Date: 1/16/14 | |
| | Checker: | Date: | |
| | | Grid: 1/10" | |

STRUT & TIE MODEL METHOD:

REF: AASHTO 5.10.9.4

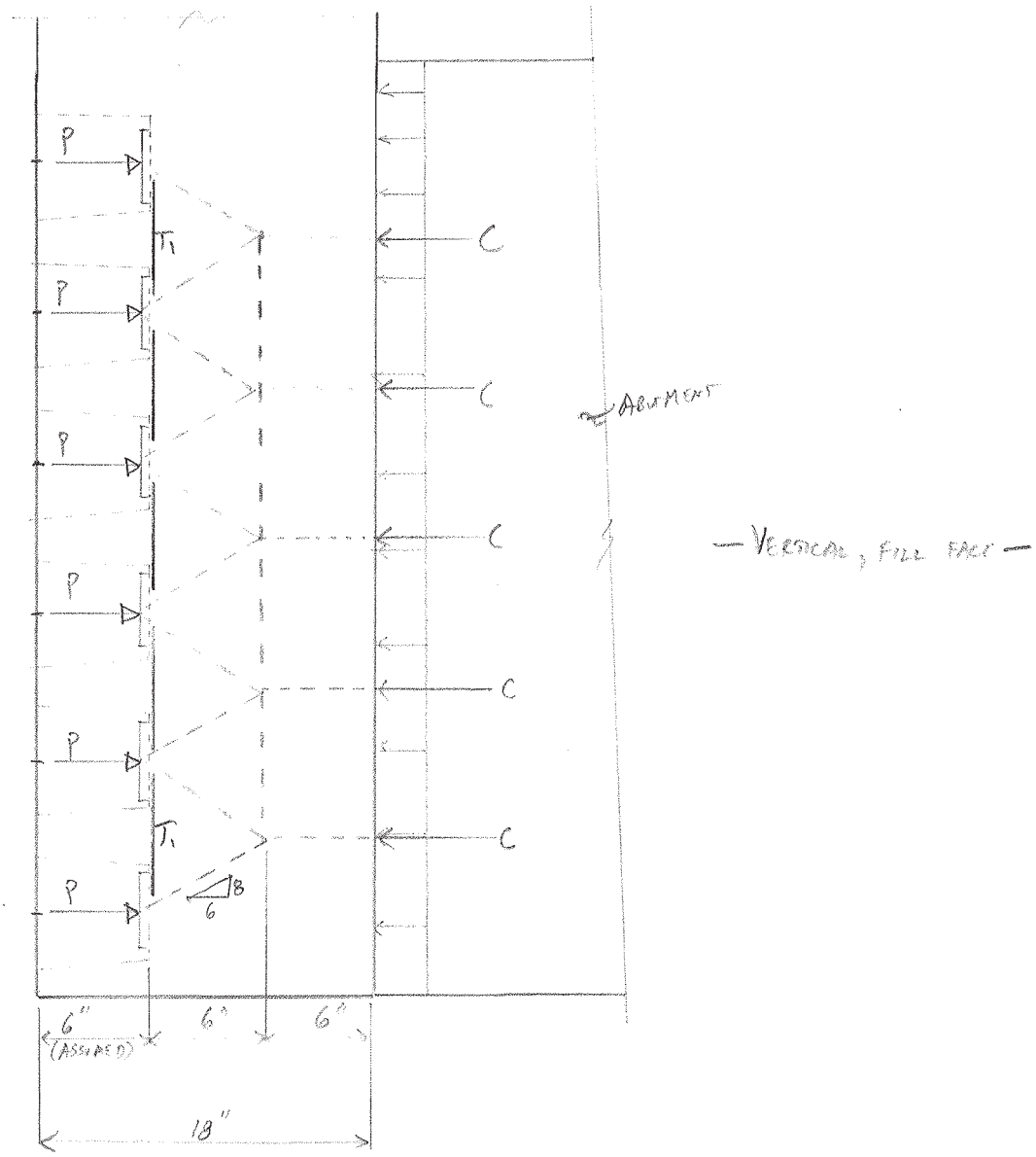


APPLIED PRESSURE IS NEARLY UNIFORM AND CONDENSING FORCES FROM 6 APPLICATION POINTS TO 5 RECEIVING POINTS IS CONSERVATIVE FOR STRUT & TIE MODELING.

$$T_1 = \frac{8}{6} \cdot P = \frac{8}{6} \cdot 42\,kip = 56\,kip$$

$$A_s\ REQ'D = \frac{56}{(0.9)(60\,ksi)} = 1.04\,in^2 \equiv 3 \sim \#6's,\ 4 \sim \#5's,\ 6 \sim \#4's$$

$\phi$

T·Y·LIN INTERNATIONAL

| | | | |
|---|---|---|---|
| Project: PITTSFIELD | Job No. 41762.00 | Sheet: 2 | of 5 |
| Item: BURSTING STEEL | Designer: J. OLUND | Date: 1/16/14 | |
| | Checker: | Date: | |
| | | Grid: 1/10" | |

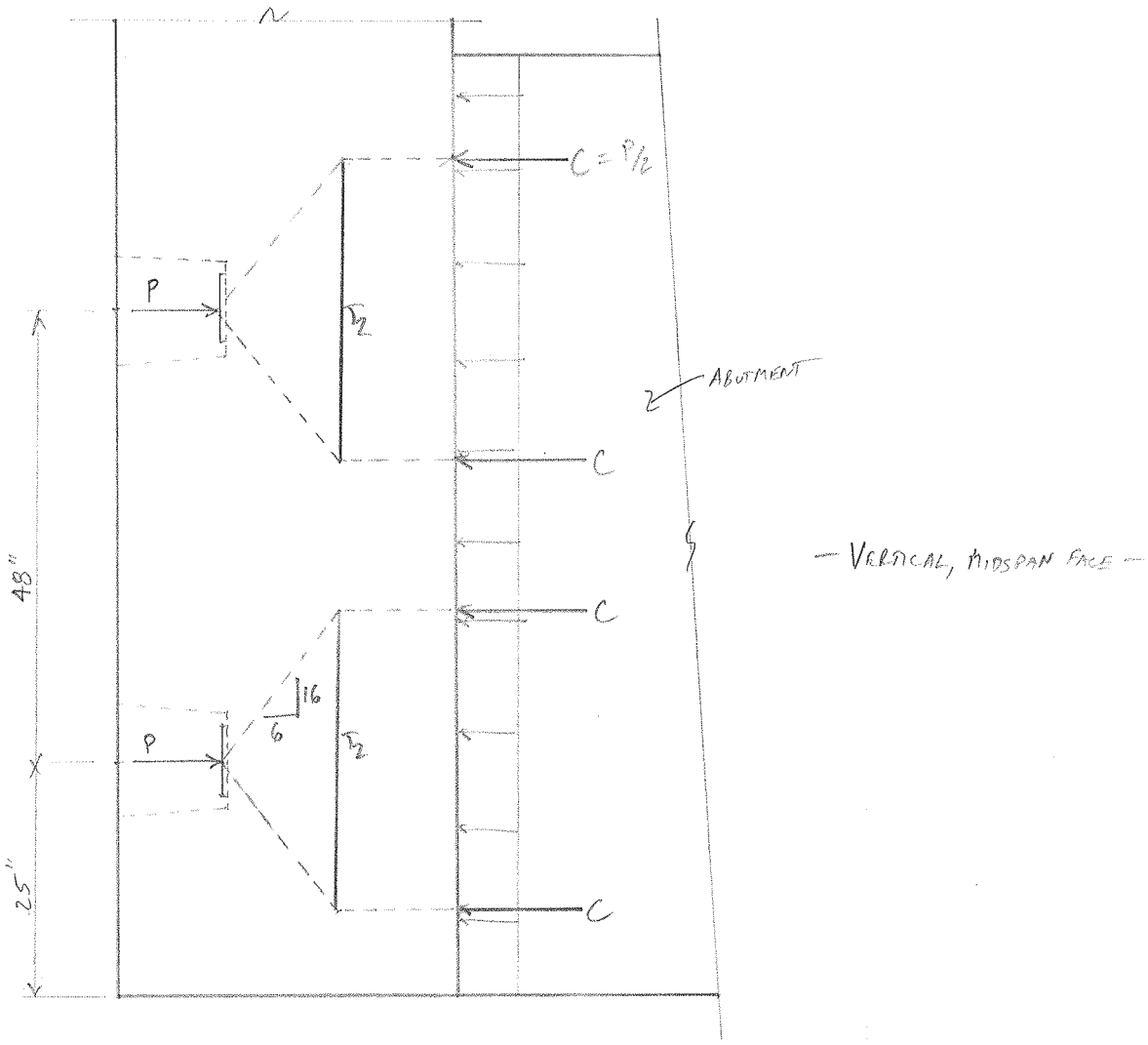


$T_2 = \frac{P}{2} \cdot \frac{16}{6} = 56\,kip$

$T_1 + T_2 = 112\,kip$ = TOTAL BURSTING FORCE, VERTICALLY

$\frac{112\,kip}{(0.9)60\,ksi} = 2.08\,in^2$ REQ'D $\equiv$ 7 ~ #5's

→ VTRANS DESIGN CALLS FOR #5's @ 12" EF WHICH PROVIDES 8 LEGS WITHIN JOINT REGION (2 FACES, 3.5' WIDTH) ∴ BURSTING STEEL SATISFIED WITH T&S STEEL.

→ NEED TO ADD HOOKS

→ PROVIDE 1-ADD'L LAYER OF #5's IN MIDDLE OF WING

| | | |
|---|---|---|
| Project: PITTSFIELD | Job No. 41176 E | Sheet: 3 of 5 |
| Item: BUSTING STEEL | Designer: J. OLUND | Date: 1/16/14 |
| | Checker: | Date: |
| HORIZONTAL STEEL | | Grid: 1/10" |

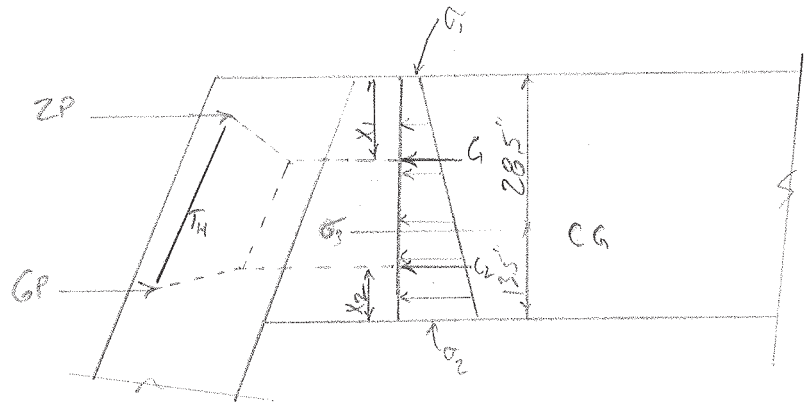


GEOMETRY:

$$\sigma_1 = \frac{P}{A} - \frac{P \cdot e}{S}$$

$$= \frac{8P}{42} - \frac{(8P)(7.5")}{\frac{42^2}{6}} = -0.0136P$$

$$\sigma_2 = \frac{P}{A} + \frac{Pe}{S} = 0.394P$$

$$\sigma_3 = 0.1905P$$

$$x_1 = \frac{2}{3}(28.5") - \frac{0.036}{0.036 + .1905} \cdot 28.5 = 17.1"$$

$$x_2 = \frac{13.5"}{3} \cdot \left(\frac{2 \cdot 0.1905 + 0.394}{0.1905 + 0.394}\right) = 5.97"$$ ⟵ IN-LINE WITH '6P' PT FORCE

TY·LIN INTERNATIONAL

| | | |
|---|---|---|
| Project: PITTSFIELD | Job No. 41762 | Sheet: 4 of 5 |
| Item: BURSTING STEEL | Designer: J. OLAND | Date: 1/16/14 |
| | Checker: | Date: |
| HORIZ. STEEL | | Grid: 1/10" |

$\alpha = 20° + \tan^{-1}\left(\frac{1.96}{11.1}\right) = 30.01°$

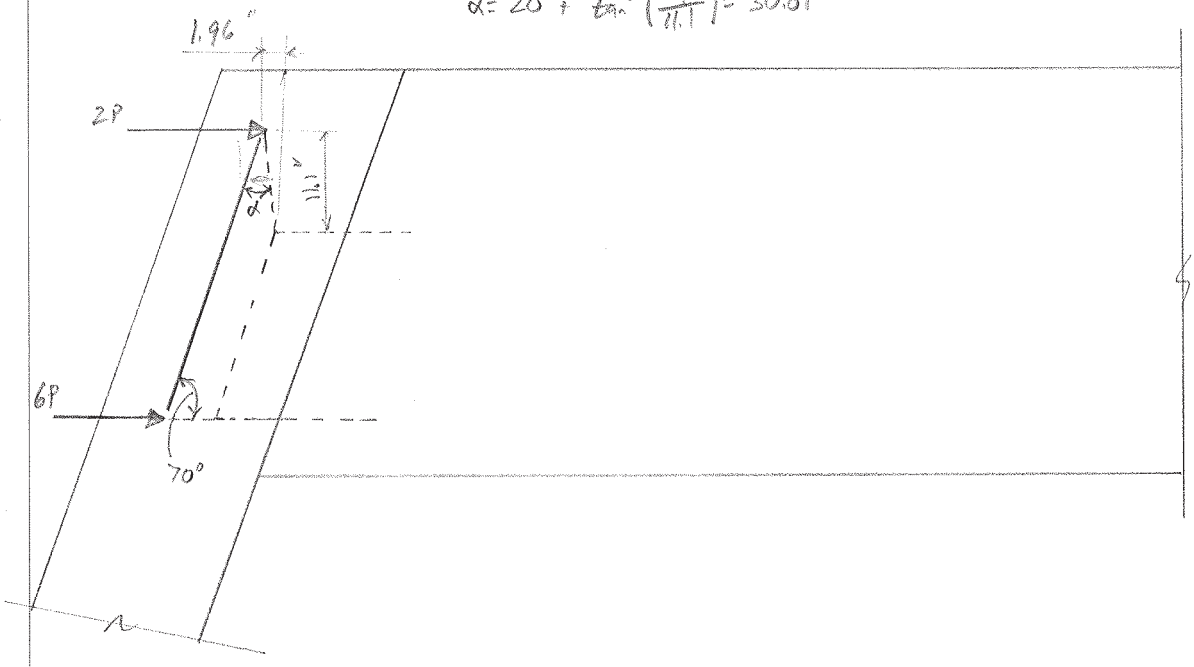


$T = \frac{2P}{\sin 30.01°} = 3.99P = 168 \text{ kip}$

$\frac{168^k}{0.9(60 \text{ ksi})} = 3.11 \text{ in}^2 \equiv 8 \text{ ea } \#6$'s

→ COMPRESSION FACE HAS #6'S @ 12" WHICH PROVIDES 9 #6'S MINIMUM ∴ T&S STEEL SATISFIES HORIZ. BURSTING STEEL REQ'S

→ STEEL NEEDS TO BE AHEAD OF APPLIED FORCE ∴ ADD #5 TIES TO CENTER OF WING, 2 @ EACH PT LOCATION

T·Y·LIN INTERNATIONAL

| | | | | | |
|---|---|---|---|---|---|
| Project: | PITTSFIELD | Job No. | 411762 | Sheet: | 5 of 5 |
| Item: | BURSTING STEEL | Designer: | J. OLUD | Date: | 1/16/14 |
| | | Checker: | | Date: | |
| | SUMMARY SKETCH | | | Grid: | 1/10" |

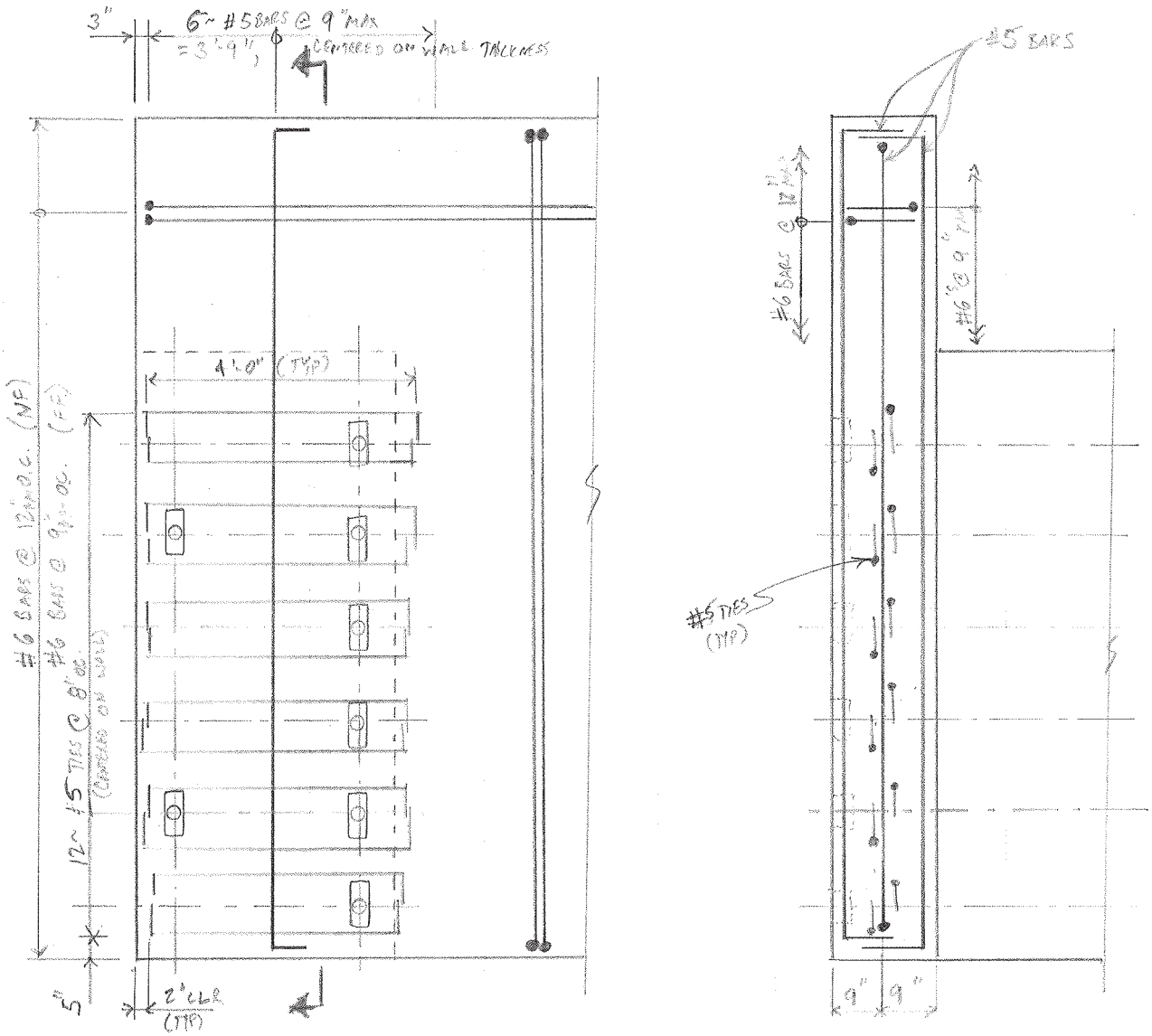

WINGWALL/ABUTMENT JOINT:

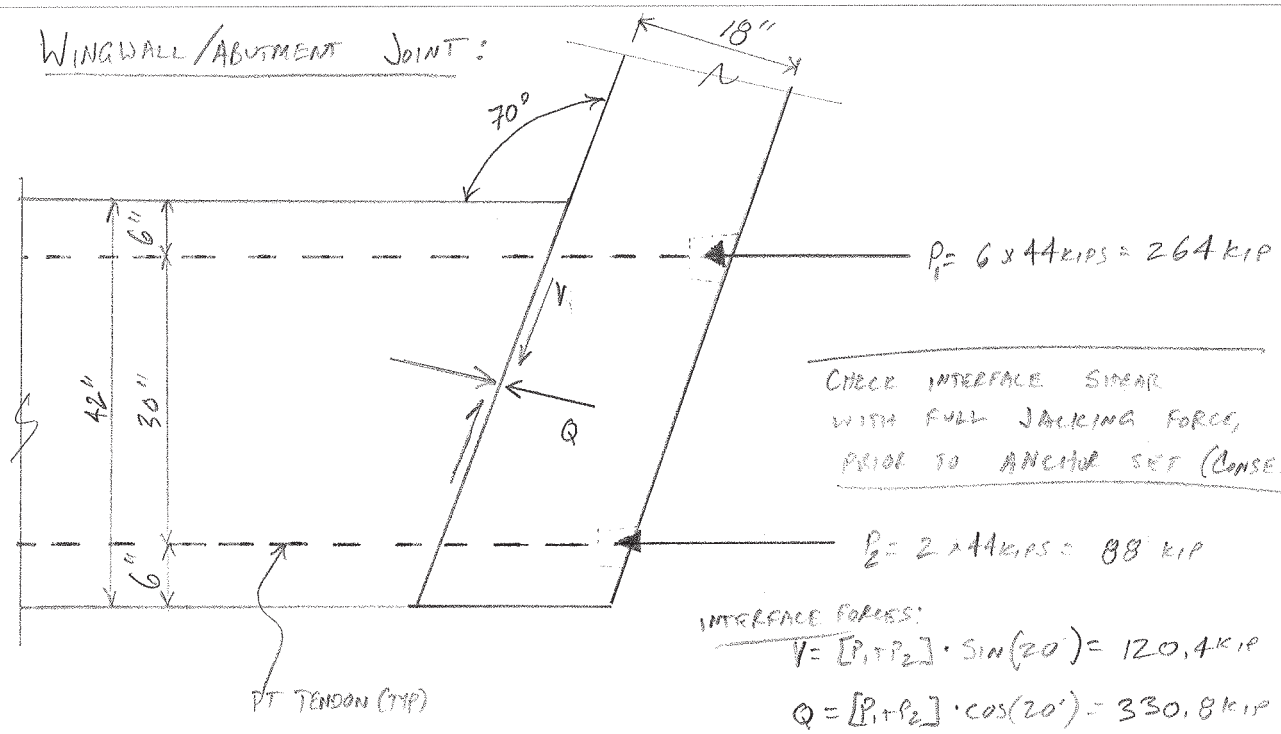


$P_1 = 6 \times 44\text{kips} = 264\text{ kip}$

$P_2 = 2 \times 44\text{kips} = 88\text{ kip}$

CHECK INTERFACE SHEAR WITH FULL JACKING FORCE, PRIOR TO ANCHOR SET (CONSERVATIVE)

INTERFACE FORCES:

$V = [P_1 + P_2] \cdot \sin(20^\circ) = 120.4\text{ kip}$

$Q = [P_1 + P_2] \cdot \cos(20^\circ) = 330.8\text{ kip}$

$$V_{ni} = \min \begin{cases} c \cdot A_{cv} + \mu (A_{vf} \cdot f_y + P_c) & [5.8.4.1\text{-}3] \\ K_1 \cdot f'_c A_{cv} & [5.8.4.1\text{-}4] \\ K_2 \cdot A_{cv} & [5.8.4.1\text{-}5] \end{cases}$$

ASSUME 1" EDGE CHAMFERS

$$A_{cv} = \left[\left[42'' - 2(1'')\right] / \cos(20^\circ)\right] \cdot 7.91' = 4{,}040\text{ in}^2$$

ABUT 2, EAST SIDE

$A_{vf} = 0\text{ in}^2$

$P_c = Q - LS - EH$

COHESION AND FRICTION FACTORS:

(AASHTO 5.8.4.3)

→ USE VALUES FOR 'CONCRETE PLACED AGAINST A CLEAN CONCRETE SURFACE, FREE OF LATANCE, BUT NOT INTENTIONALLY ROUGHENED'

→ INTERFACE SURFACES ARE MATCH CAST AND WILL HAVE INTERFACES PLACED TOGETHER WITH EPOXY.

$c = 0.075$ KSI

$\mu = 0.6$

$K_1 = 0.2$

$K_2 = 0.8$ KSI

WITH $P_c = 0$ KIPS (ASSUMING LS + EH > Q):

$V_{ni} = 303$ KIPS

$\phi = 0.90$ (5.5.4.2.1)

$\phi V_{ni} = 272.7$ KIPS >> $V_u = 1.25(120.4$ KIPS$) = 150.5$ KIPS

∴ INTERFACE SHEAR OK, PROVIDED BOND BETWEEN SURFACES IS NOT BROKEN

STRENGTH I LOADS:

FROM OTHER CALCULATIONS,

EH = 36 KIP

LS = 11.9 KIP

$R_u = 1.35EH + 1.75LS = 69.4$ KIP

→ WITH LONG TERM LOSSES AND 0.9 LOAD FACTOR, Q = 230 KIP & V = 84 KIP

$\phi V_{ni} = cA_{cv} + \mu \cdot P_c = 0.9\left[\left(\frac{1}{2}\right)(0.075)(4{,}040\,in^2) + 0.6\,(230)\right] = 260$ KIP >> $V_u = 84$ KIP

↳ ASSUME ONLY PARTIALLY BONDED

∴ INTERFACE SHEAR OK, CHECK SHEAR KEYS

T·Y·LIN INTERNATIONAL

| | | |
|---|---|---|
| Project: PITTSFIELD | Job No. 41762.00 | Sheet: 3 of 3 |
| Item: INTERFACE SHEAR | Designer: J. OLIND | Date: 1/9/14 |
| | Checker: | Date: |
| | | Grid: 1/10" |

CHECK STANDARD VTRANS SHEAR KEY (STRUCTURES DETAIL SD-501.00)

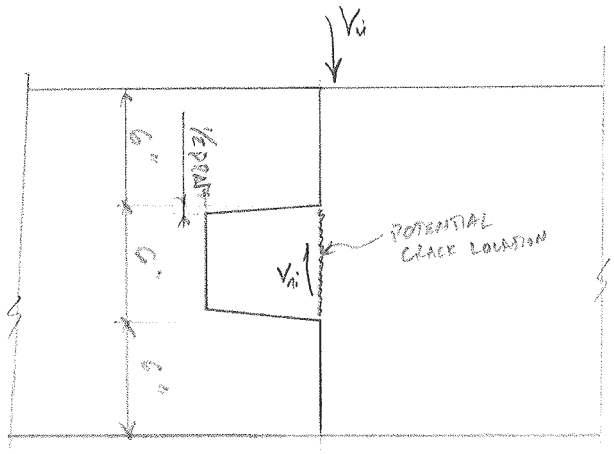


$V_u = 1.25(120.4\text{ kips}) = 150.5\text{ kips}$

COHESION AND FRICTION VALUES:

→ USE 'CONCRETE PLACED MONOLITHICALLY' & NEGLECT NORMAL FORCE

$c = 0.40\text{ ksi}$

$K_1 = 0.25$

$K_2 = 1.5\text{ ksi}$

$A_{cv} = (7.91')(0.5') = 569\text{ in}^2$

$\phi V_{ni} = (0.9)(0.4\text{ ksi})(569\text{ in}^2) = 204.8\text{ kips} > V_u = 150.5\text{ kips}$

INTERFACE SHEAR OK

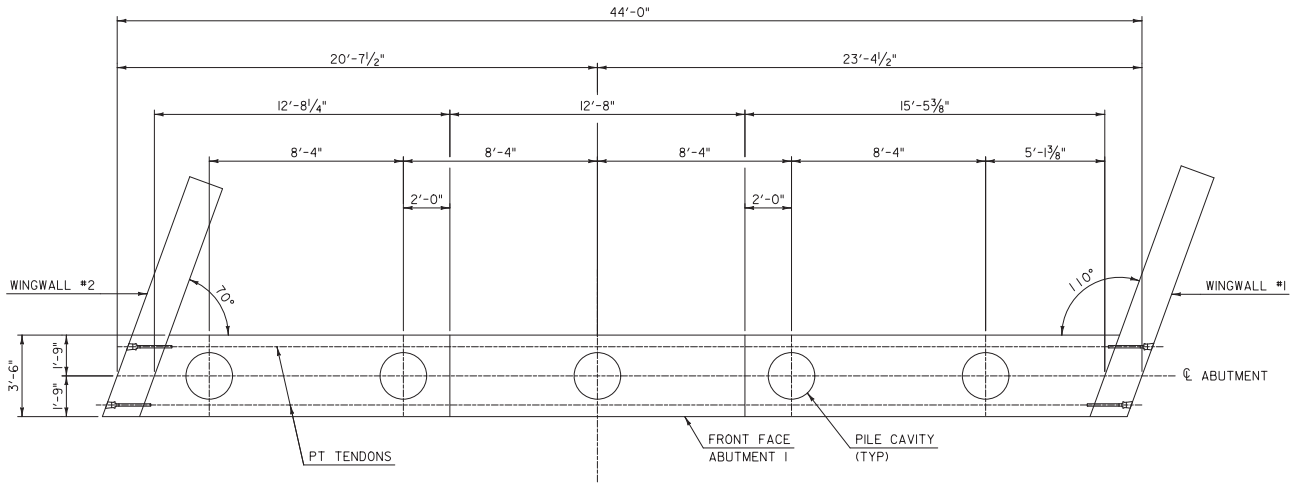


ABUTMENT #1 - PLAN

SCALE: ⅜" = 1'-0"

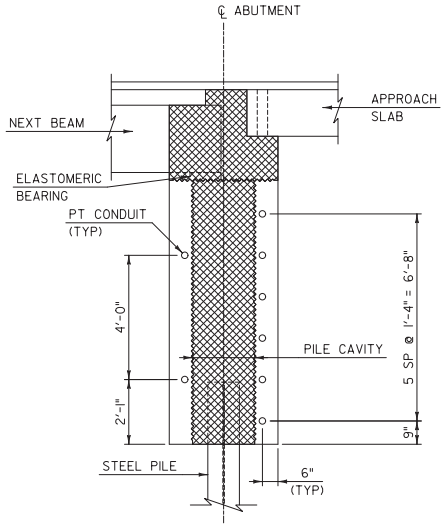


ABUTMENT TYPICAL

SCALE: ½" = 1'-0"

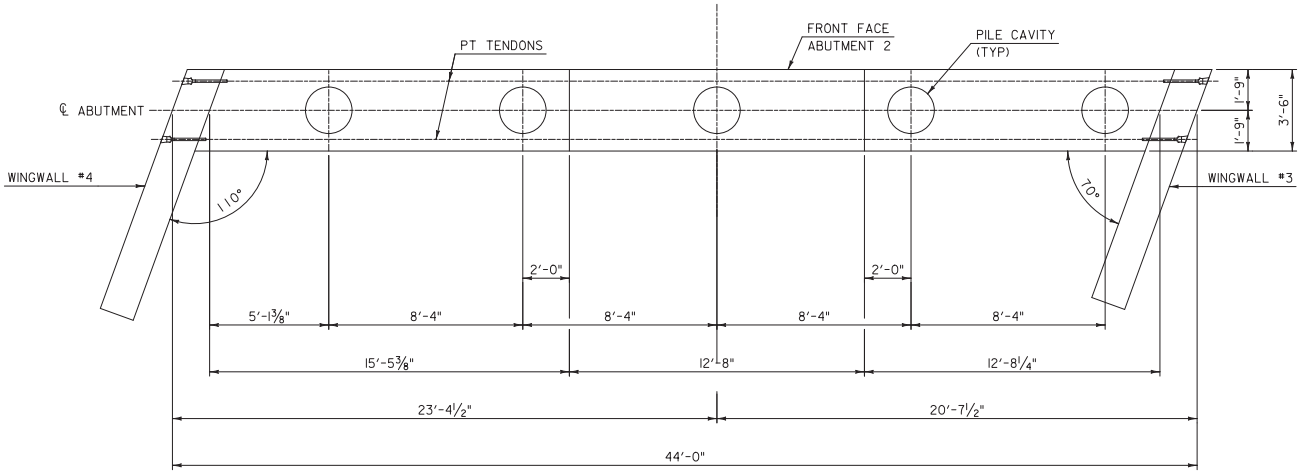


ABUTMENT #2 - PLAN

SCALE: ⅜" = 1'-0"

## NOTES:

1. GEOMETRY SHOWN HEREIN IS AN UNDERSTANDING OF THE CONTRACTOR'S INTENDED PRECAST ABUTMENT CONSTRUCTION AND IS PROVIDED TO QUALIFY THE POST-TENSIONING DESIGN. DETAILS SHOWN HEREIN ARE INTENDED TO CONVEY TRANSVERSE POST-TENSIONING DESIGN ONLY. ALL GEOMETRY, MILD STEEL REINFORCEMENT, PROJECT NOTES, AND DETAILS NOT SHOWN HEREIN SHALL BE IN ACCORDANCE WITH THE ORIGINAL BRIDGE REPLACEMENT PLAN SET PREPARED BY VTRANS.

2. THERE SHALL BE A SINGLE POST-TENSIONING TENDON PER DUCT. POST-TENSIONING DESIGN VALUES ARE AS FOLLOWS:
   - TENDONS SHALL BE 0.6 INCH DIAMETER, AASHTO M 203 LOW RELAXATION 7-WIRE STRANDS.
   - JACKING FORCE PER TENDON = 42 KIPS.
   - ANCHOR SET SHALL BE ¼ INCH OR LESS.
   - APPARENT MODULUS OF ELASTICITY (TENDONS) = 28,500 KSI.

3. TENDON STRESSING SEQUENCE SHALL BEGIN NEAR THE CENTER OF THE ABUTMENT AND PROGRESS OUTWARD.

4. PILE CAVITIES SHALL BE FILLED PRIOR TO FULLY STRESSING THE TENDONS. TENDONS MAY BE JACKED TO 3 KIPS EACH PRIOR TO FILLING PILE CAVITIES.

| | | |
|---|---|---|
| TY·LIN INTERNATIONAL | PROJECT NAME: PITTSFIELD<br>PROJECT NUMBER: ER BRF 022-1(23) | |
| | FILE NAME: z86e060bdrabut1.dgn<br>PROJECT LEADER: J. OLUND<br>DESIGNED BY: J. OLUND<br>ABUTMENT 1 & 2 PLAN & SECTION | PLOT DATE: 3/3/2014<br>DRAWN BY: S. MORGAN<br>CHECKED BY: D. MYERS<br>SHEET 1 OF 2 |

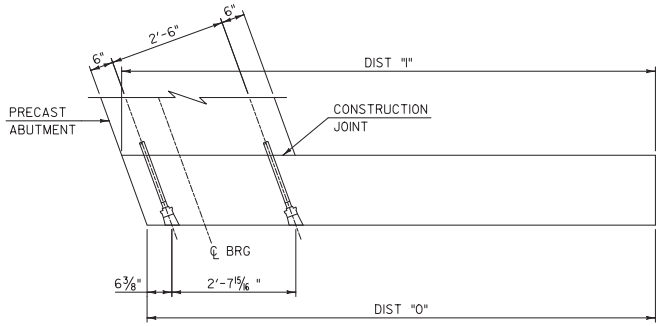


WWI PLAN

SCALE: 3/4" = 1'-0"

(REINFORCING STEEL NOT SHOWN FOR CLARITY)

| WINGWALL DIMENSIONS | | | | |
|---|---|---|---|---|
| | WINGWALL 1 | WINGWALL 2 | WINGWALL 3 | WINGWALL 4 |
| DIST "I" | 11'-8 3/4" | 10'-8 1/4" | 10'-8 1/4" | 11'-8 3/4" |
| DIST "O" | 11'-2 1/4" | 11'-2 3/4" | 11'-2 3/4" | 11'-2 1/4" |

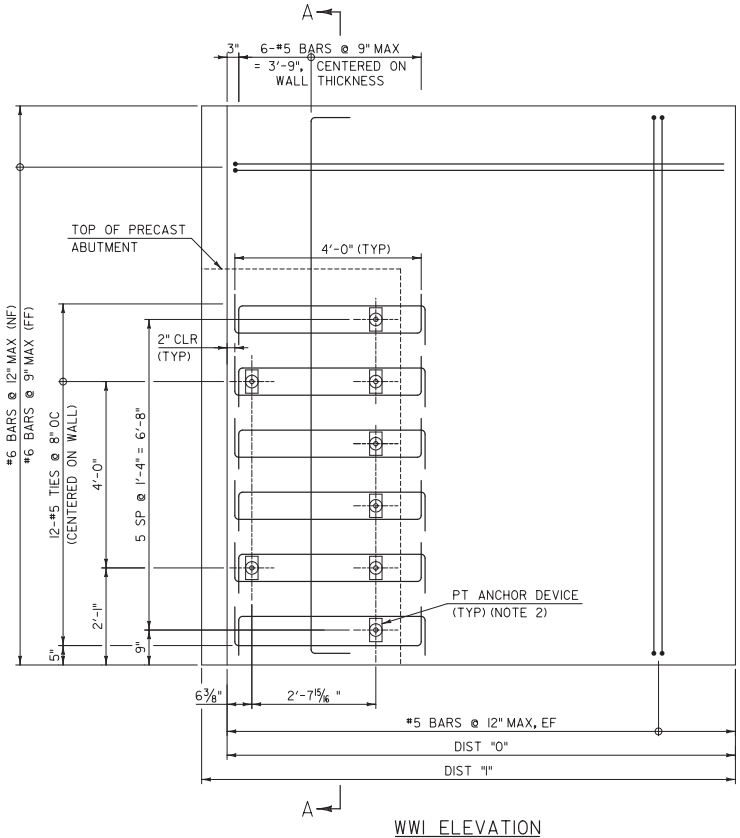


WWI ELEVATION

SCALE: 3/4" = 1'-0"

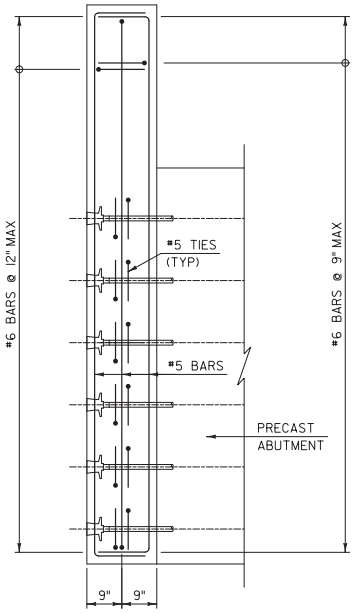


SECTION A-A WWI TYPICAL

SCALE: 3/4" = 1'-0"

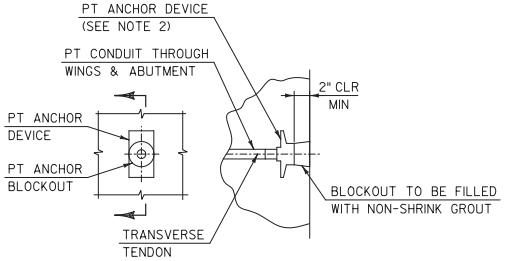


TRANSVERSE TENDON ANCHORAGE DETAIL

NOT TO SCALE

## NOTES:

1. WWI SHOWN, OTHERS SHALL BE SIMILAR.
2. POST-TENSIONING ANCHOR DEVICE SHALL BE DYWIDAG ANCHOR CASTING GTI SI-06 OR SIMILAR.
3. PRECAST WINGWALL MILD STEEL REINFORCEMENT SHOWN SHALL BE USED IN PLACE OF REINFORCEMENT DETAILED IN THE ORIGINAL PLAN SET.
4. DIMENSIONS AND ELEVATIONS NOT SHOWN SHALL BE CONSISTENT WITH THE ORIGINAL PLAN SET.

| | |
|---|---|
| TY·LIN INTERNATIONAL | PROJECT NAME: PITTSFIELD<br>PROJECT NUMBER: ER BRF 022-1(23) |
| FILE NAME: z86e060bdrabutdet.dgn<br>PROJECT LEADER: J. OLUND<br>DESIGNED BY: T. POULIN<br>WINGWALL DETAILS | PLOT DATE: 3/3/2014<br>DRAWN BY: S. MORGAN<br>CHECKED BY: J. OLUND<br>SHEET 2 OF 2 |