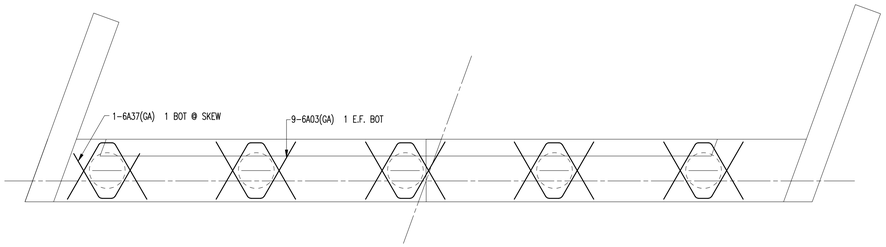

POST TENSION DUCTS NOT SHOWN FOR CLARITY

ABUTMENT #1 PLAN VIEW

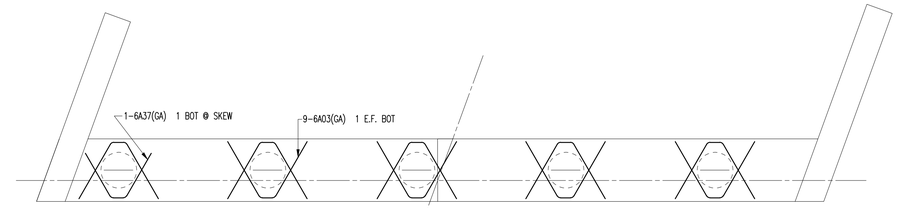

ABUTMENT #2 PLAN VIEW

* = 1 TEST BAR INCLUDED IN QUANTITY

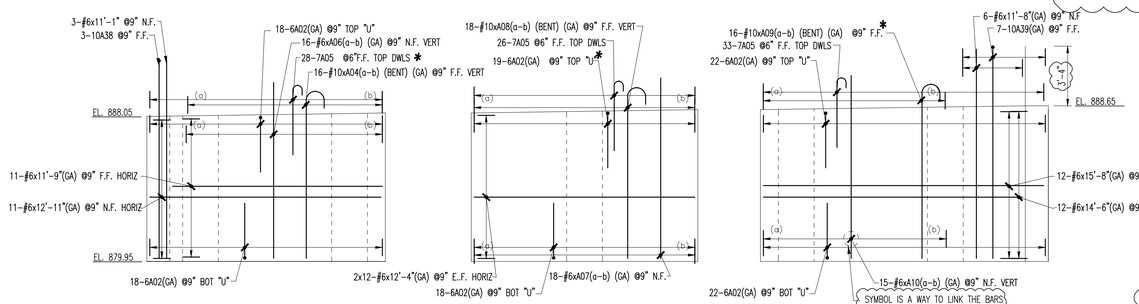

SYMBOL IS A WAY TO LINK THE BARS TO THE RANGE LINE

ABUTMENT 1 ELEVATION

NEAR FACE VERTICALS TO BE FIELD ADJUSTED FOR NEXT BEAM LAYOUT

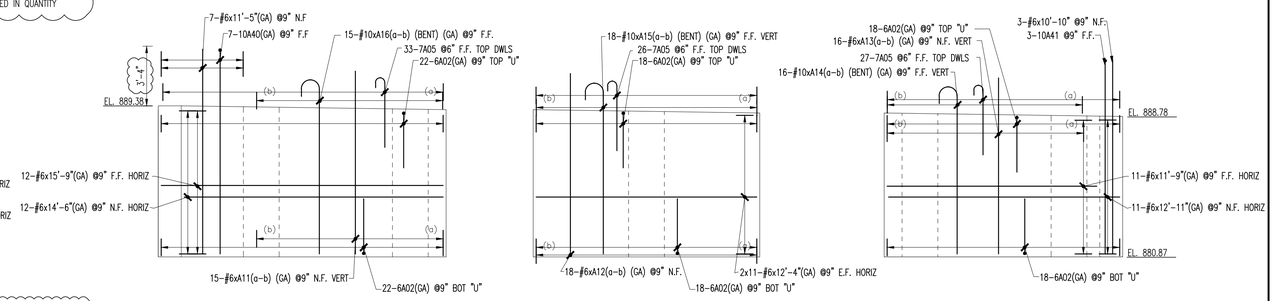

ABUTMENT 2 ELEVATION

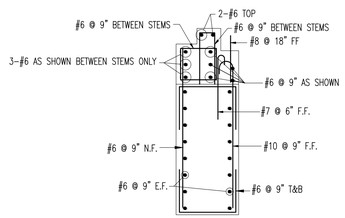

REINFORCING TYPICAL

(GA) IS FOR DUAL COATED REINF

DUAL COATED MEETS ASTM A 1055-10
STEEL IS ASTM A 615 OR A 706

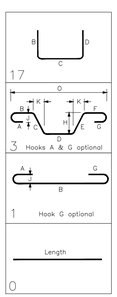

Drawing Sheet : R01 — BAR LIST

Bar Mark	Qty	Size	Total Length	Type	'A'	'B'	'C'	'D'	'E'	'F'	'G'	'H'	'J'	'K'	'O'	'R'
6A02	233	#6	9'-3"	17		3'-1"	3'-1"	3'-1"								
6A03	18	#6	8'-1 X"	3			3'-7 X"	10"	3'-7 X"			3'-2 X"		1'-9 X"	4'-4 X"	
7A05	173	#7	4'-9"	1	10"	3'-11"							7"			
A04a	14	#10	10'-8"	1	1'-5"	9'-3 X"							1'-1 X"			
A04b	2	#10	10'-10 X"	1	1'-5"	9'-5 X"							1'-1 X"			
First and Last Bar in Vary Group Shown Only																
A06a	14	#6	9'-9"			9'-9"										
A06b	2	#6	9'-11"			9'-11"										
First and Last Bar in Vary Group Shown Only																
A08a	17	#10	10'-10 X"	1	1'-5"	9'-5 X"							1'-1 X"			
A08b	1	#10	11'-X"	1	1'-5"	9'-7 X"							1'-1 X"			
First and Last Bar in Vary Group Shown Only																
A07a	17	#6	10'-0"			10'-0"										
A07b	1	#6	10'-2"			10'-2"										
First and Last Bar in Vary Group Shown Only																
A10a	13	#6	10'-2"			10'-2"										
A10b	2	#6	10'-4"			10'-4"										
First and Last Bar in Vary Group Shown Only																
A09a	12	#10	11'-X"	1	1'-5"	9'-7 X"							1'-1 X"			
A09b	4	#10	11'-3"	1	1'-5"	9'-10"							1'-1 X"			
First and Last Bar in Vary Group Shown Only																
A16a	8	#10	10'-11"	1	1'-5"	9'-6"							1'-1 X"			
A16b	7	#10	11'-0"	1	1'-5"	9'-7 X"							1'-1 X"			
First and Last Bar in Vary Group Shown Only																
A11a	8	#6	10'-0"			10'-0"										
A11b	7	#6	10'-1"			10'-1"										
First and Last Bar in Vary Group Shown Only																
A14a	9	#10	10'-6"	1	1'-5"	9'-1"							1'-1 X"			
A14b	7	#10	10'-7"	1	1'-5"	9'-2 X"							1'-1 X"			
First and Last Bar in Vary Group Shown Only																
A13a	9	#6	9'-7"			9'-7"										
A13b	7	#6	9'-8"			9'-8"										
First and Last Bar in Vary Group Shown Only																
A15a	12	#10	10'-8"	1	1'-5"	9'-3"							1'-1 X"			
A15b	6	#10	10'-10"	1	1'-5"	9'-5"							1'-1 X"			
First and Last Bar in Vary Group Shown Only																

Drawing Sheet : R01 — BAR LIST

Bar Mark	Qty	Size	Total Length	Type	'A'	'B'	'C'	'D'	'E'	'F'	'G'	'H'	'J'	'K'	'O'	'R'
A12a	12	#6	9'-9"			9'-9"										
A12b	6	#6	9'-11"			9'-11"										
First and Last Bar in Vary Group Shown Only																

LAP CHART-U.N.O.

SIZE	TOP BARS ★	OTHER BARS
#11		
#10		
#9		
#8		
#7		
#6		
#5		
#4		
#3		

★ -Top bars are horiz. bars with more than 12" of concrete cast below the bars.

No.	Description	Date	By
1	CORRECTIONS/ APPROVAL	4-8-14	TRH
0	APPROVAL	3-14-14	TRH

Revisions and Issue Record

The full intent and purpose of this drawing is the placing of reinforcing steel bars ONLY. It is NOT to be used as a means of communication between the Architect, Engineer, Contractor or any other Sub-trades.

THIS DRAWING IS NOT TO BE SCALED.

HarrisRebar Harlan Steel — National Strength. Local Service.

DETAILED AT:
CANAAN
NEW HAMPSHIRE

Project: PITTSFIELD ER BRF 022
PITTSFIELD, VT

Drawing: ABUTMENT REINF

Customer: COLD RIVER BRIDGES

Engineer:

Refer to Release:

Date	Drawn	Chkd.	JOB No.	Dwg. No.
3-7-14	TRH		33505152	R01

W:\thill\Projects\33505152\Placing Drawings\DWGs\R01.dwg