CAVENDISH ER BRF 0146 (13)
CONTRACTOR FABRICATED PBU UNITS

SHEET1:PBU PLAN
SHEET2:PBU PLAN UNITS 1&2
SHEET3:PBU PLAN UNITS 3&4
SHEET4:PBU TYPICAL DETAILS
SHEET5:CLOSURE POUR DETAILS
SHEET6:PBU INSERT-LAYOUT
SHEET7:PBU-RE-BAR
SHEET8:QC PROCEDURES/PLAN
SHEET9:QC PROCEDURES/PLANS
SHEET10:PBU CASTING PLAN
SHEET11: CONCRETE MIX DESIGNS
SHEET12: BRIDGE ANCHORAGE
(ADDED 2-19-14)

(REVISION #1 2/17/2014)

COLD RIVER BRIDGES, LLC
10 LANBRO LANE
TEL 603-756-9300 WALPOLE, NH FAX 603-756-9303

CAVENDISH ER BRF 0146(13)

COVER SHEET/INDEX

SHEET NUMBER: COVER

DATE: 2-17-14 scale:

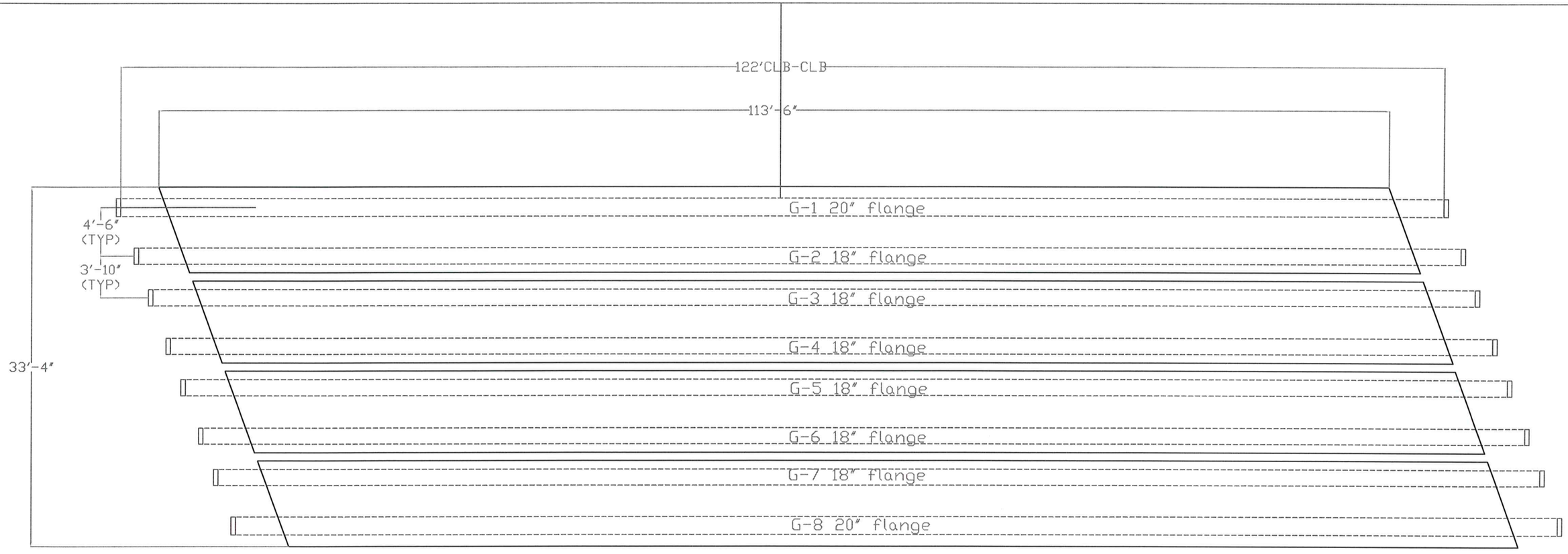

NOTES:
FINISHES
TOP-SCREED
SIDES-FORM WIRE BRUSH&POWER WASH
BOTTOM-FORM
ENDS-FORM WIRE BRUSH&POWER WASH

CONCRETE- VERMONT CLASS HPC A fc'-5000 psi @ 28 days

(REVISION #1 2/17/2014)

COLD RIVER BRIDGES, LLC
10 LANBRO LANE
TEL 603-756-9300 WALPOLE, NH FAX 603-756-9303

CAVENDISH ER BRF 0146(13)

PBU PLAN

SHEET NUMBER 1

DATE: 2-17-14 scale:

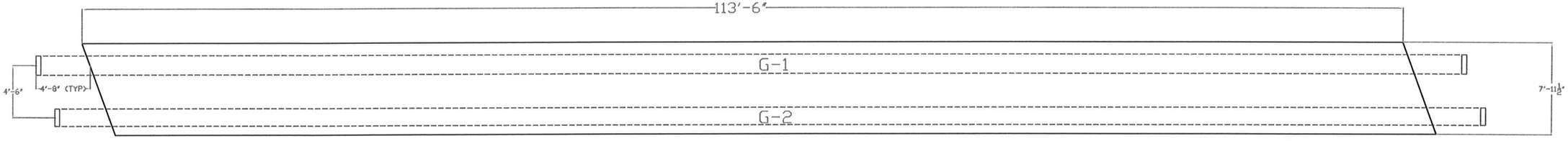

PBU #1 EXTERIOR UNIT

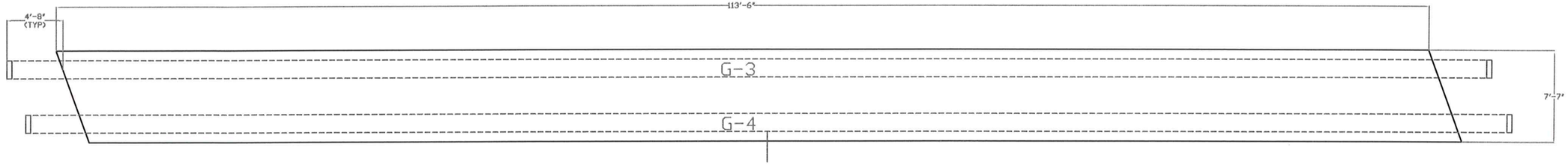

PBU #2 INTERIOR UNIT

(REVISION #1 2/17/2014)

COLD RIVER BRIDGES, LLC
10 LANBRO LANE
TEL 603-756-9300 WALPOLE, NH FAX 603-756-9303

CAVENDISH ER BRF 0146(13)

PBU #1, AND #2

SHEET NUMBER 2

DATE: 2-17-14 scale:

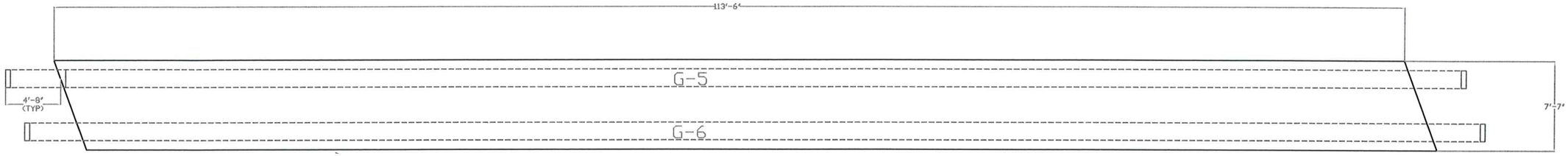

PBU #3 INTERIOR UNIT

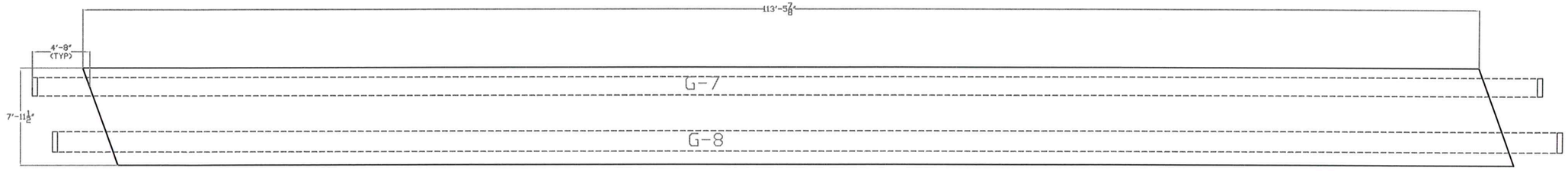

PBU #4 EXTERIOR UNIT

(REVISION #1 2/17/2014)

COLD RIVER BRIDGES, LLC
10 LANBRO LANE
TEL 603-756-9300 WALPOLE, NH FAX 603-756-9303

CAVENDISH ER BRF 0146(13)

PBU #3 AND #4

SHEET NUMBER 3

DATE: 2-17-14 scale:

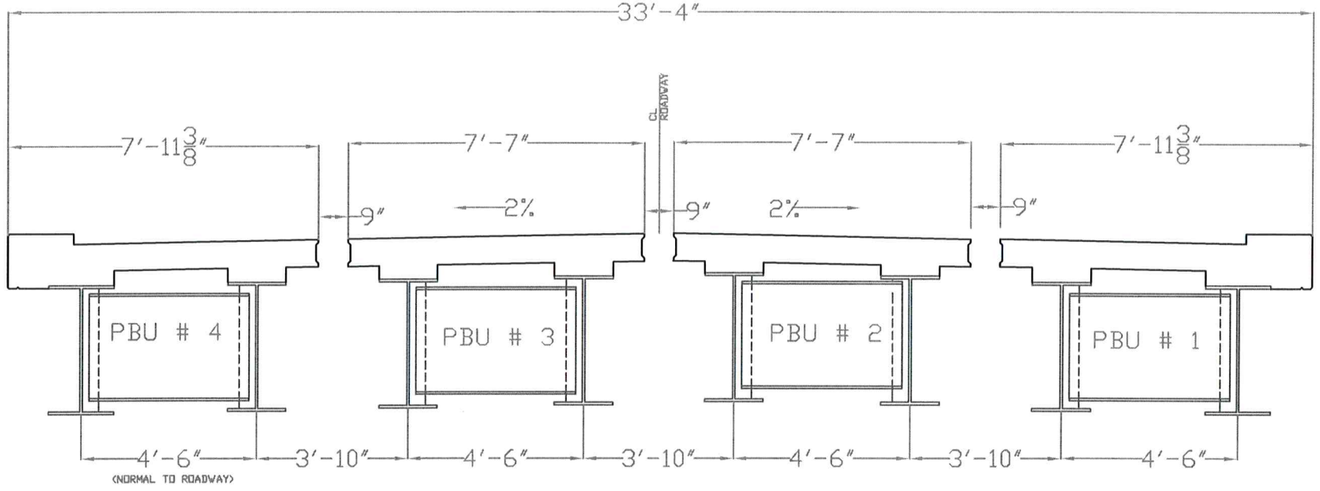

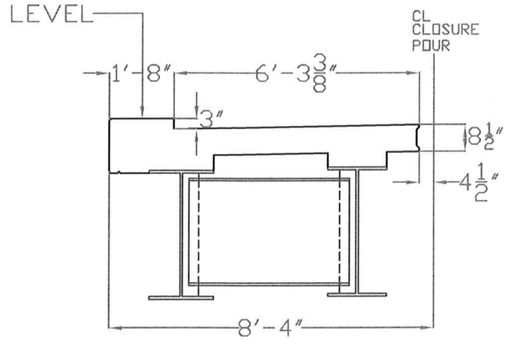

TYPICAL EXTERIOR PBU

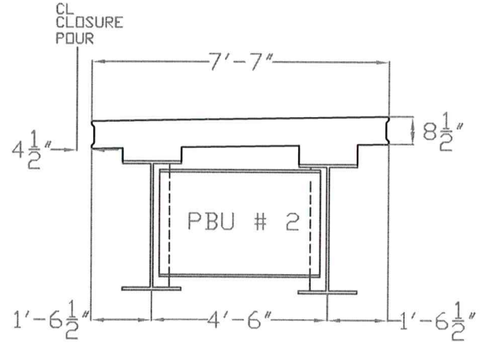

TYPICAL INTERIOR PBU

(REVISION #1 2/17/2014)

COLD RIVER BRIDGES, LLC
10 LANBRO LANE
TEL 603-756-9300 WALPOLE, NH FAX 603-756-9303

CAVENDISH ER BRF 0146(13)

PBU DETAILS

SHEET NUMBER 4

DATE: 2/17/14 scale:

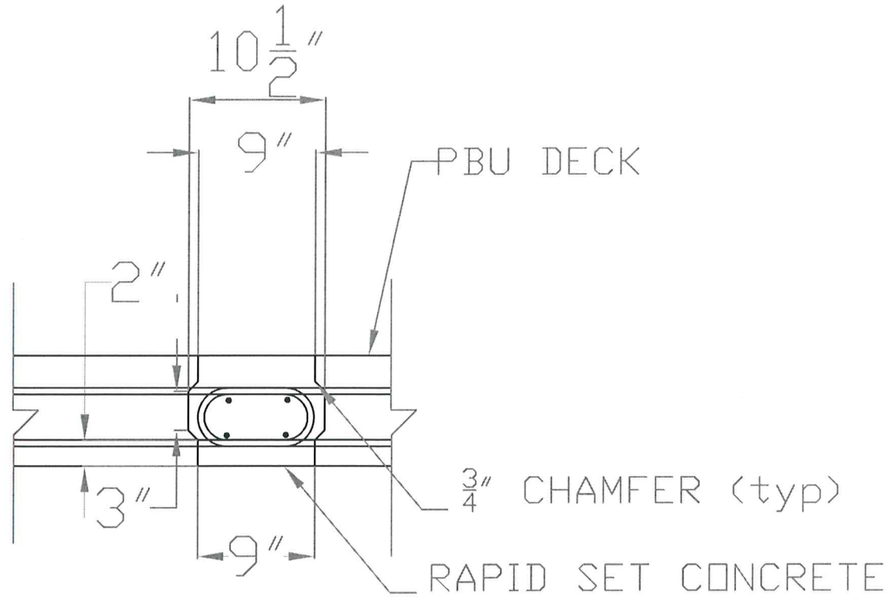

CLOSURE POUR SECTION

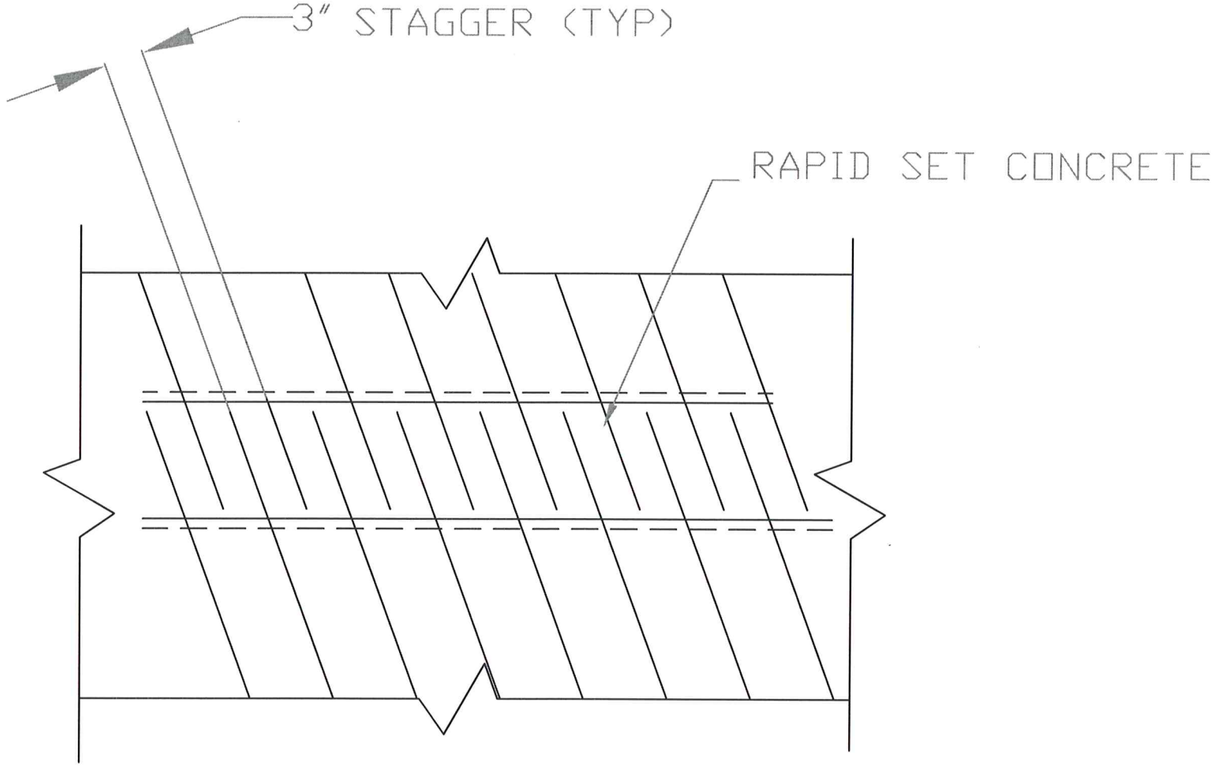

CLOSURE POUR PLAN

(REVISION #1 2/17/2014)

COLD RIVER BRIDGES, LLC
10 LANBRO LANE
TEL 603-756-9300 WALPOLE, NH FAX 603-756-9303

CAVENDISH ER BRF 0146(13)

CLOSURE POUR DETAILS

SHEET NUMBER 5

DATE: 2-17-14 scale:

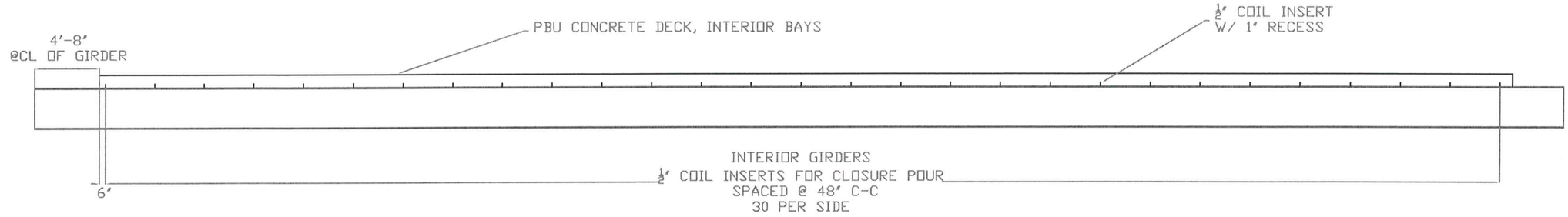

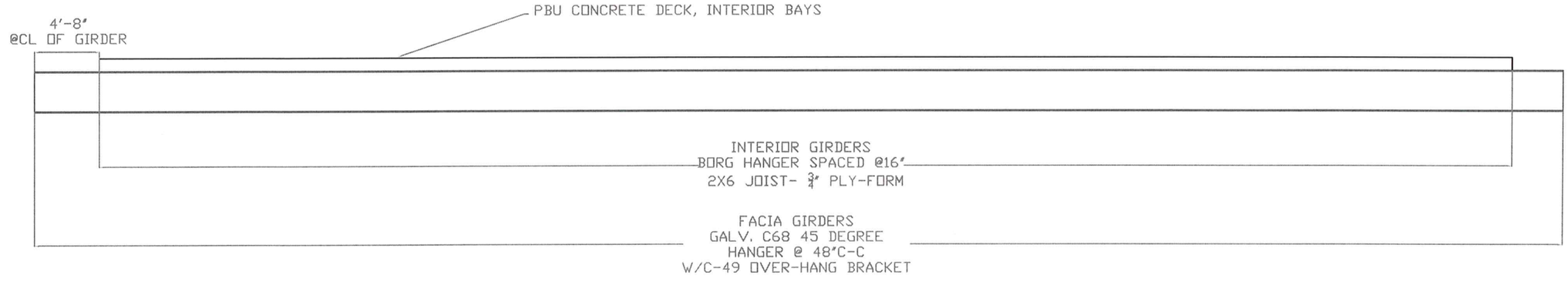

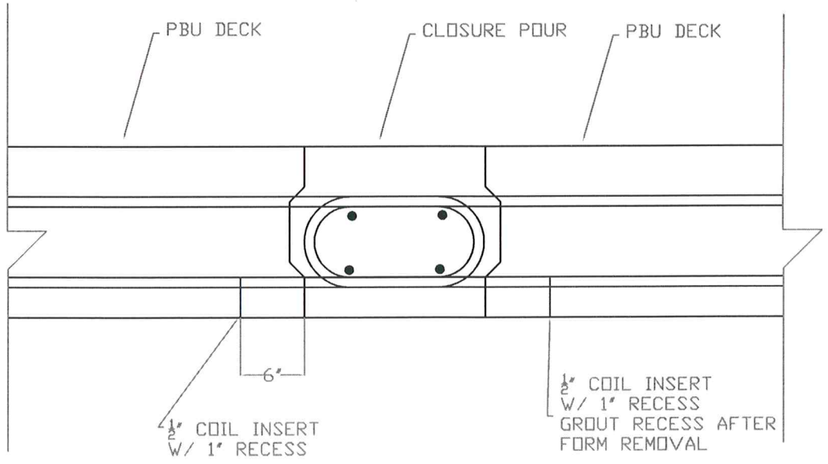

(REVISION #1 2/17/2014)

COLD RIVER BRIDGES, LLC
10 LANBRO LANE
TEL 603-756-9300 WALPOLE, NH FAX 603-756-9303

CAVENDISH ER BRF 0146(13)

PBU CLOSURE POUR
COIL INSERT LAY-OUT

SHEET NUMBER
6

DATE: 1-6-14 Scale:

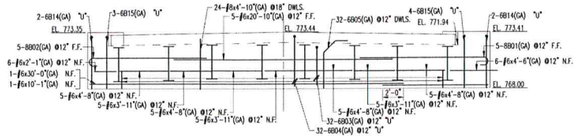

ABUTMENT 1 CLOSURE POUR

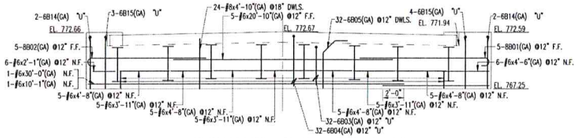

ABUTMENT 2 CLOSURE POUR

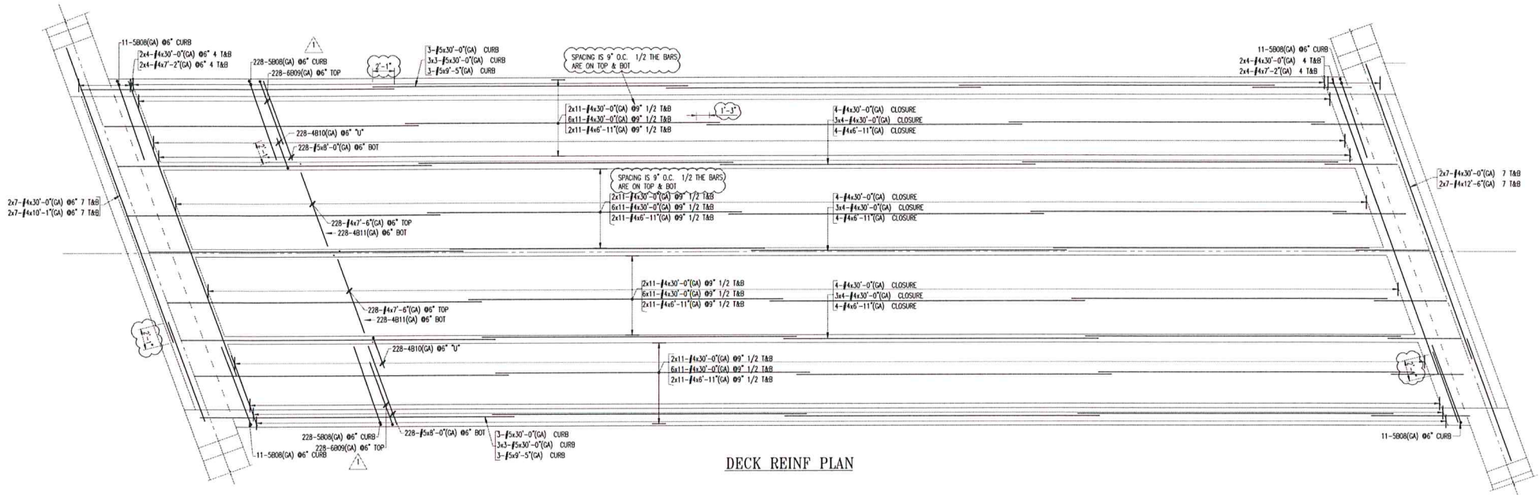

DECK REINF PLAN

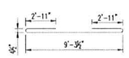

SPECIAL SKETCH 4B11 TYPE H10

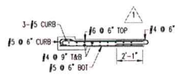

EXTERIOR UNIT - SECTION

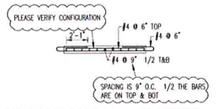

INTERIOR UNIT - SECTION

FOR THE B801 & B802 THE ONLY DIMENSIONS THAT CAN CHANGE IS THE "B" DIMENSION. THE "A" & "J" ARE THE STANDARDS FOR THE BAR SIZE THE 8" "J" DIMENSION IS TO SMALL TO BEND. PLEASE VERIFY IT IS OK TO LEAVE AS IS.

Drawing Sheet : R02					BAR LIST													
Bar Mark	Qty	Size	Total Length	Type	A	B	C	D	E	F	G	H	J	K	L	M	N	O
4010	436	#4	6'-8 5/8"	17		7'-1"	4 5/8"	5'-2"										
4011	436	#4	15'-7"	H10		15'-7"									4 5/8"		6'-3 5/8"	
5008	500	#5	6'-3 5/8"	17		7'-1"	6'-2"	5 3/8"	6'-6"						3 5/8"		4 5/8"	7'-11 5/8"
6003	64	#8	15'-11 5/8"	17			5'-8"	5'-8 5/8"	5'-8"									
6004	64	#8	15'-5"	17		6'-10"	5'-8"	5'-8"	6'-10"									
6005	64	#8	6'-2"	22			1'-3 5/8"	1'-1 5/8"	2'-5 5/8"						10 5/8"		6'-5 5/8"	6'-10"
6800	436	#8	7'-2"	1	8"	6'-5"										8"		
6014	8	#8	15'-7"	17		5'-8"	5'-7"	5'-8"										
6015	14	#8	15'-8 5/8"	17		5'-8"	5'-8 5/8"	5'-8"										
8801	10	#8	15'-6"	1	6'-5"	15'-6"										10"		
8802	10	#8	15'-5 5/8"	1	6'-5"	15'-5 5/8"										10"		

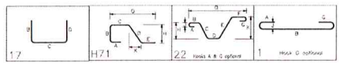

LAP CHART-U.N.O.		
#11		
#10		
#9		
#8		
#7		
#6		
#5		
#4		
#3		
SIZE	TOP BARS *	OTHER BARS

* - Top bars are horiz. bars with more than 12" of concrete cast below the bars.

ENG. AND ARCH. PLEASE VERIFY ALL CLOUDED AREAS

(GA) IS DUAL COATED REINF

No.	Description	Date	By
2	CORRECTIONS/APPROVAL	2-17-14	TRH
1	CORRECTIONS/ APPROVAL	1-16-14	TRH
0	APPROVAL	12-18-13	TRH

Revisions and Issue Record

The full intent and purpose of this drawing is the placing of reinforcing steel bars ONLY. It is NOT to be used as a means of communication between the Architect, Engineer, Contractor or any other Sub-trades.

THIS DRAWING IS NOT TO BE SCALED.

HarrisRebar Better Steel. National Strength. Local Service.

DETAILED AT: CANAAN NEW HAMPSHIRE

Project: BRIDGE REPLACEMENT #1 CAVENDISH, VT

Drawing: DECK REINF

Customer: COLD RIVER BRIDGES

Engineer:

Refer to Release:

Date	Drawn	Chkd.	JOB No.	Dwg. No.
12-16-13	TRH		10050769	R02

W:\TRH\Projects\10050769\Placing Drawings\DWGs\R02.dwg

COLD RIVER BRIDGES, LLC
10 LANBRO LANE
TEL 603-756-9300 WALPOLE, NH FAX 603-756-9303

CAVENDISH ER BRF 0146(13)

PBU R-BAR

SHEET NUMBER 7

DATE: 2/17/14 scale:

(REVISION #1 2/17/2014)

QUALITY CONTROL PROCEDURES-PORTABLE BRIDGE UNITS.

1.CARROLL CONCRETE WILL BE RESPONSIBLE FOR THE CONTRACTOR./SUPPLIOR QC TESTING DURING CONCRETE POURS.
2.A PRE-PRODUCTION MEETING SHALL BE HELD BETWEEN THE CONTRACTOR AND RESIDENT ENGINEER BEFORE CONCRETE PLACEMENT.
3. VTRANS WILL RETAIN THEIR RESPONSIBILITIES FOR QUALITY ACCEPTANCE TESTING.
4. FOUR EXTRA CYLINDER SETS PER CONCRETE PLACEMENT SHALL BE TAKEN FOR EARLY STRENGTH BREAKS.
5. ALL INSIDE FORM DIMENSION AND R-BAR SPACING AND CLEARANCES SHALL BE REVIEWED AND DOCUMENTED ON THE PRE-POUR INSPECTION SHEET BY THE CONTRACTOR AND THE RESIDENT ENGINEER BEFORE CASTING IS COMMENCED.ANY DEFICIENCIES SHALL BE CORRECTED TO MEET THE TOLERANCES BELOW.
6. BEFORE FORMS ARE ERECTED THE CONTRACTOR WILL INSPECT ALL FORM-WORK FOR DAMAGE OR RESIDUAL CONCRETE. ANY DEFICIENCY IN THE FORM WORK SHALL BE CORRECTED BEFORE FORM WORK CONTINUES.
7. FORMS SHALL HAVE A GENEROUS COATING OF FORM OIL APPLIED. . CAUTION WILL BE TAKEN NOT TO HAVE PONDING OF FORM OIL IN THE BASE OF THE FORM OR ON ANY R-BAR.
8. ALL PRE-CAST WILL BE INSPECTED BY BOTH THE CONTRACTOR AND THE RESIDENT ENGINEER AND DOCUMENTED ON THE POST POUR INSPECTION SHEET.
9. CURE WILL MEE THE REQUIREMENTS OF SECTION 501.17

PORTABLE BRIDGE UNIT DIMENSIONAL TOLERANCES

+- $\frac{1}{4}$"-REINFORCING PLACEMENT +-1/4" COVER AND CLEARANCE 1" BAR SPACING .
LENGTH (EACH UNIT) +- $\frac{3}{4}$" (Length of adjacent units shouldnot vary by more than $\frac{3}{4}$")
WIDTH +- $\frac{3}{8}$"
DEVIATION FROM FROM DIAGNOLS +-3/4" (Horizontal)
DEVIATION SQUARENESS OR SKEW +- $\frac{3}{4}$"
HORIZONTAL ALIGNMENT +- $\frac{3}{8}$"

10.FIELD INSTALLATION TOLERANCES
VERTICAL DEVIATION BETWEEN UNITS PRIOR TO GROUTING- +-3/8"
DEVIATION IN JOINT WINDTH-+- $\frac{3}{8}$"

11. EACH PIECE OF PRE-CAST SHALL BE MARKED WITH ITS UNIT NUMBER AND DATE OF CASTING
12. CURING WILL MEET THE REQUIREMENTS OF SUBSECTION 501.17
13. CONCRETE FINISHING.
PBU FINISH WILL BE A VIBRTORY SCREED FINISH

COLD RIVER BRIDGES, LLC
10 LANBRO LANE
TEL 603-756-9300 WALPOLE, NH FAX 603-756-9303

CAVENDISH ER BRF 0146(13)

QC PROCEDURES/PLAN

SHEET NUMBER 8

DATE: 1-8-14 scale:

REPAIR OF UNITS:
1.Minor defects in the PBU units shall be fixes using an overhead and vertical repair material from the Vermont Agency of Transportation Appoved Products list.

2. Cracking .01" or less shall be sealed with a penetrating sealing from the Vermont Agency of Transportation Approved Products list.
Crack widths measuring .01"-.08" shall be filled with an epoxy injected crack filler from the Vermont Agency of Transportation Approved Products List.

Production Site Handling: Units shall not be lifted or moved unitl design strength has been met.

Pre-Assemblyl: Cold River Bridges will be casting the PBU Units on site. Each unit will be constructed adjacent to the location of the new bridge. PBU units will be cast simultaniously. Asthe unit will be cast at the same time with only 19" between bulk-heads pre-assembly will not be required.

Shipping and Handling: PBU units will be constructed on site and latterally moved into place on rollers. The PBU Units will be jacked down onto the final bearing.

COLD RIVER BRIDGES, LLC
10 LANBRO LANE
TEL 603-756-9300 WALPOLE, NH FAX 603-756-9303

CAVENDISH ER BRF 0146(13)

QC PROCEDURES/PLAN

SHEET NUMBER 9

DATE: 1-7-14 scale:

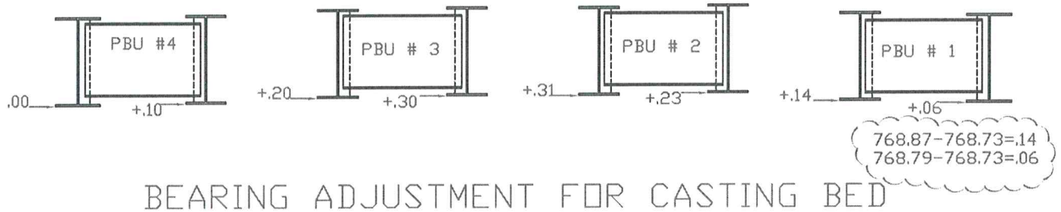

BEARING ADJUSTMENT FOR CASTING BED

CASTING SEQUENCE:
1.SET CONCRETE BLOCKS ON COMPACTED SUB-GRADE
2.INSTALL HARDWOOD BLOCKING, DOUBLE BEAMS,AND 12X25 CHANNEL TRACK.
3.SET INDIVIDUAL PLATE GIRDERS,SHIM TO GRADE.
5.BOLT AND TORQUE INDIVIDUAL PBU SECTIONS.
6.PROFILE INDIVIDUAL GIRDERS AND CALCULATE BLOCKING DISTANCE****
6.TIE R-BAR, BUILD BULK-HEADS PBU-UNITS 1-4
7.SET SCREED, TEST RUN
8.CAST PBU DECK SECTIONS 1-4,SIMUTANEOUSLY

****THEORETICAL BOTTOM OF DECK ELEVATIONS ARE NOT INCLUDED IN THE PLANS,PLEASE PROVIDE.PLEASE PROVIDE ELEVATIONS BASED ON FINAL LOCATION.

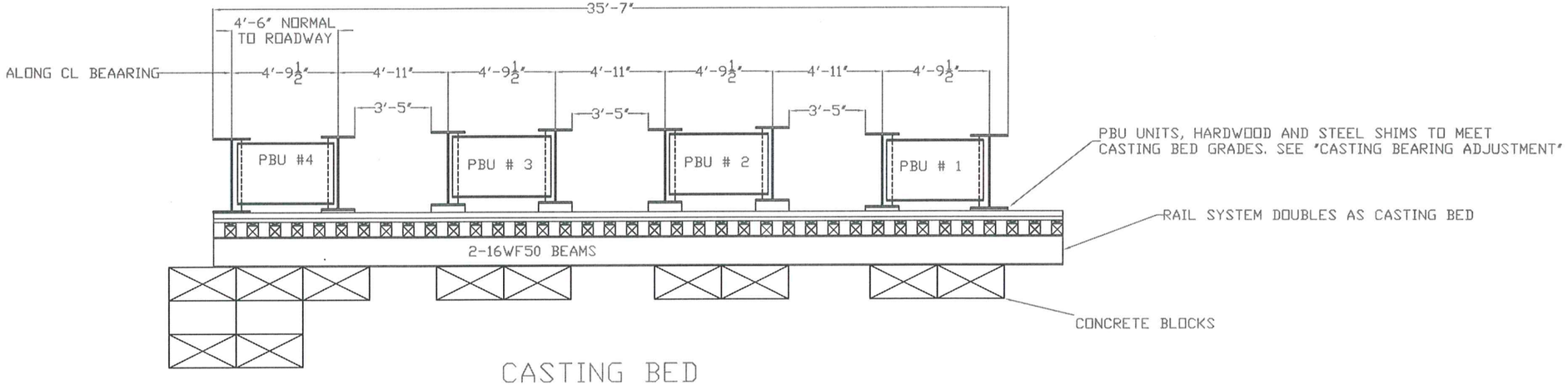

CASTING BED

(REVISION #1 2/17/2014)

COLD RIVER BRIDGES, LLC
10 LANBRO LANE
TEL 603-756-9300 WALPOLE, NH FAX 603-756-9303

CAVENDISH ER BRF 0146(13)

PBU-CASTING PLAN

SHEET NUMBER 10

DATE: 2-17-14 scale:

STATE OF VERMONT
AGENCY OF TRANSPORTATION
MATERIAL AND RESEARCH SECTION - STRUCTURAL CONCRETE UNIT

STRUCTURAL CONCRETE MIX DESIGN SUBMISSION

Concrete class: Precast Prestressed
Additional Description
Ready Mix Supplier: CARROLL CONCRETE - CHARLESTOWN, NH
Designed By Scott Jordan
Design strength 5000 PSI
Design by dry weight or saturated surface dry: SSD

Agency Use Only	
Mix ID	PP00-0
Mix Design #	
Approved by	
Approved Date	
Spec Book Year	2013

Mix designs are valid for a 12 month period from date of approval or unless there is a change in material, material property or design parameter.

Cement: 701.02	Source:		Specific Gravity			lb/cy	0.00 cf
	Brand Name:						
Cement Type III: 701.04	Source:		Specific Gravity			lb/cy	0.00 cf
	Brand Name:						
Blended Cement: 701.06	Source:	LAFARGE - TERCEM - MONTREAL, EAST PLANT	Specific Gravity	3.020	705	lb/cy	3.74 cf
	Brand Name:						
Cement with Slag: 701.07	Source:		Specific Gravity			lb/cy	0.00 cf
	Brand Name:						
Pozzolan: 725.03(a)	Source:		Specific Gravity			lb/cy	0.00 cf
	Brand Name:						
Fly Ash: 725.03(a)	Source:		Specific Gravity			lb/cy	0.00 cf
	Brand Name:						
Silica Fume: 725.03(b)	Source:		Specific Gravity			lb/cy	0.00 cf
	Brand Name:						
Slag: 725.03(c)	Source:		Specific Gravity			lb/cy	0.00 cf
	Brand Name:						
Water					32 gals	267 lb/cy	4.28 cf
Air Content Target					7.0 %		1.89 cf
Coarse Aggregate 3/8" 704.02A	Source:		Absorption		Specific Gravity	lb/cy	0.00 cf
Coarse Aggregate 3/4" 704.02B	Source:	COLD RIVER MATERIALS PIT - N WALPOLE, NH	Absorption	0.80	Specific Gravity 2.880	1688 lb/cy	9.39 cf
Coarse Aggregate 1 1/2" 704.02C	Source:		Absorption		Specific Gravity	lb/cy	0.00 cf
Fine Aggregate: 704.01	Source:	NEWPORT SAND & GRAVEL - NEWPORT, NH	Absorption	0.90	Specific Gravity 2.670	1283 lb/cy	7.70 cf
			Fineness Modulus	2.83			
Air Entrainment Admixture 725.02(b)	Source:	MASTER BUILDERS INC - MESQUITE, TX	Specific Gravity			1.5 oz/cy	
	Brand Name:	MasterAir AE 200 / Micro Air					
Retarder Admixture: 725.02(c)	Source:	MASTER BUILDERS INC - MESQUITE, TX	Specific Gravity			1 oz/cwt	
	Brand Name:	MasterSet R100 / Pozzolith 100XR					
High Range Water Reducer Admixture: 725.02(h)	Source:	MASTER BUILDERS INC - MESQUITE, TX	Specific Gravity			3 oz/cwt	
	Brand Name:	MasterGlenium 7500					
Other Admixtures:			Specific Gravity			2 oz/cwt	0.00 cf
	Source:						
	Brand Name:	BASF, MasterSure Z60					
	Source:		Specific Gravity				0.00 cf
	Brand Name:						
	Source:		Specific Gravity				0.00 cf
	Brand Name:						
			TOTAL	47.570		3943 lb	27.00 cf

Maximum Water/Cementitious Ratio	0.44		
Maximum Water (gal/cy)	37.2		
Slump Min/Max (inch)	4.0	min	7.0 max
Air Content Min/Max (%)	5.0	min	9.0 max
Design Unit Wt. (lb/cf)	146.04		

Notes:

2014 Construction season 2011 specification 5000-psi precast 2-10-14

STATE OF VERMONT
AGENCY OF TRANSPORTATION
MATERIAL AND RESEARCH SECTION - STRUCTURAL CONCRETE UNIT

STRUCTURAL CONCRETE MIX DESIGN SUBMISSION

Concrete class: HPC Rapid Set
Additional Description
Ready Mix Supplier: CARROLL CONCRETE - CHARLESTOWN, NH
Designed By Scott Jordan
Design strength 7000 PSI
Design by dry weight or saturated surface dry: SSD

Agency Use Only	
Mix ID	HP00-et-0
Mix Design #	
Approved by	
Approved Date	
Spec Book Year	2011

Mix designs are valid for a 12 month period from date of approval or unless there is a change in material, material property or design parameter.

Cement: 701.02	Source:		Specific Gravity			lb/cy	0.00 cf
	Brand Name:						
Cement Type III: 701.04	Source:		Specific Gravity			lb/cy	0.00 cf
	Brand Name:						
Blended Cement: 701.06	Source:	LAFARGE - TERCEM - MONTREAL, EAST PLANT	Specific Gravity	3.020	900	lb/cy	4.78 cf
	Brand Name:						
Cement with Slag: 701.07	Source:		Specific Gravity			lb/cy	0.00 cf
	Brand Name:						
Pozzolan: 725.03(a)	Source:		Specific Gravity			lb/cy	0.00 cf
	Brand Name:						
Fly Ash: 725.03(a)	Source:		Specific Gravity			lb/cy	0.00 cf
	Brand Name:						
Silica Fume: 725.03(b)	Source:		Specific Gravity			lb/cy	0.00 cf
	Brand Name:						
Slag: 725.03(c)	Source:		Specific Gravity			lb/cy	0.00 cf
	Brand Name:						
Water					32 gals	267 lb/cy	4.28 cf
Air Content Target					7.0 %		1.89 cf
Coarse Aggregate 3/8" 704.02A	Source:		Absorption		Specific Gravity	lb/cy	0.00 cf
Coarse Aggregate 3/4" 704.02B	Source:	COLD RIVER MATERIALS PIT - N WALPOLE, NH	Absorption	0.80	Specific Gravity 2.830	1560 lb/cy	8.83 cf
Coarse Aggregate 1 1/2" 704.02C	Source:		Absorption		Specific Gravity	lb/cy	0.00 cf
Fine Aggregate: 704.01	Source:	NEWPORT SAND & GRAVEL - NEWPORT, NH	Absorption	1.00	Specific Gravity 2.660	1170 lb/cy	7.05 cf
			Fineness Modulus	2.69			
Air Entrainment Admixture 725.02(b)	Source:	MASTER BUILDERS INC - MESQUITE, TX	Specific Gravity			8 oz/cy	
	Brand Name:	MicroAir					
Retarder Admixture: 725.02(c)	Source:		Specific Gravity			oz/cwt	
	Brand Name:						
High Range Water Reducer Admixture: 725.02(h)	Source:	MASTER BUILDERS INC - MESQUITE, TX	Specific Gravity			5 oz/cwt	
	Brand Name:	Glenium 7500					
Other Admixtures:			Specific Gravity	1.010		1.25 gal/cy	0.17 cf
	Source:						
	Brand Name:	BASF, MasterLIFE SRA20					
	Source:		Specific Gravity			3 oz/cwt	0.00 cf
	Brand Name:	BASF, Rheotec Z60					
	Source:		Specific Gravity				0.00 cf
	Brand Name:						
			TOTAL	48.520		3908 lb	27.00 cf

Maximum Water/Cementitious Ratio			
Maximum Water (gal/cy)	0.0		
Slump Min/Max (inch)	4.0	min	10.0 max
Air Content Min/Max (%)	5.5	min	8.5 max
Design Unit Wt. (lb/cf)	144.73		

Notes:

12/4/2013

(REVISION #1 2/17/2014)

COLD RIVER BRIDGES, LLC
10 LANBRO LANE
TEL 603-756-9300 WALPOLE, NH FAX 603-756-9303

CAVENDISH ER BRF 0146(13)

PBU CONCRETE MIX DESIGN

SHEET NUMBER 11

DATE: 2-17-14 scale:

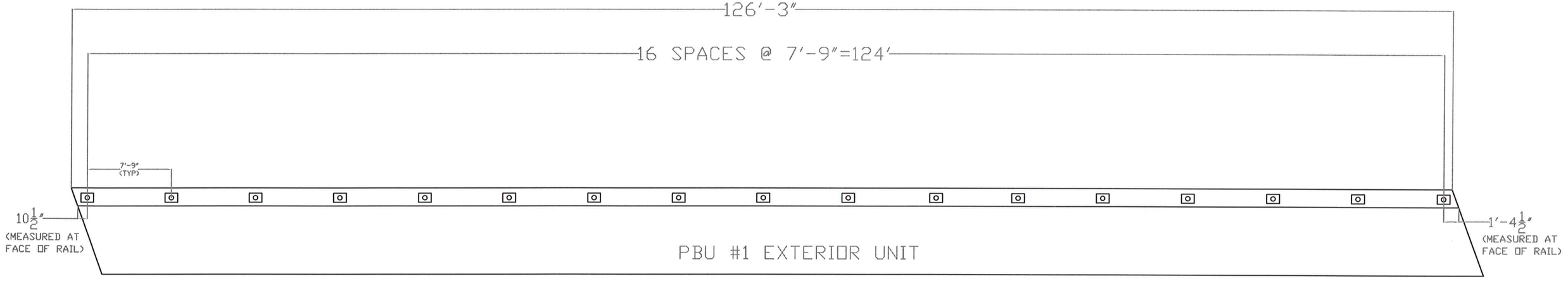

WEST RAILING PLAN VIEW
(EAST RAIL SIMILAR)

COLD RIVER BRIDGES, LLC
10 LANBRO LANE
TEL 603-756-9300 WALPOLE, NH FAX 603-756-9303

CAVENDISH ER BRF 0146(13)

ANCHORAGE LAY-OUT

SHEET NUMBER 12

DATE: 2-19-14 scale: