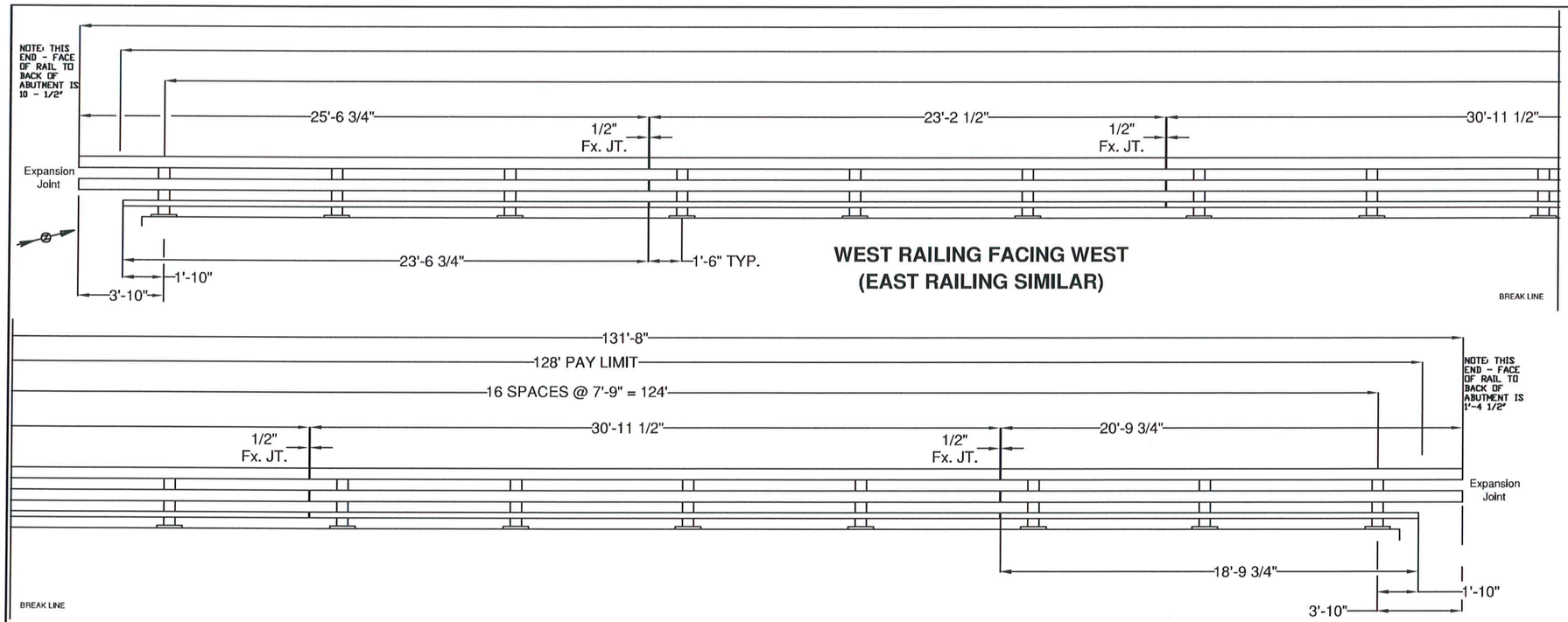

WEST RAILING FACING WEST
(EAST RAILING SIMILAR)

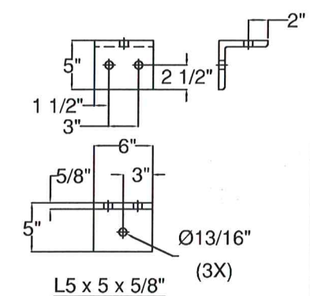

L5 x 5 x 5/8"
RAILING ANGLE

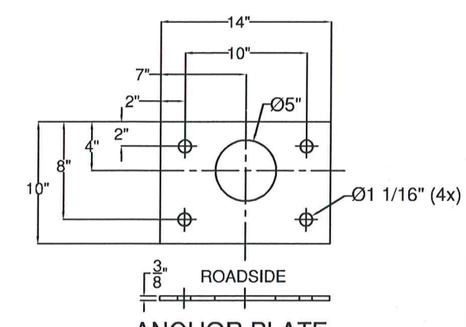

ANCHOR PLATE

BILL OF MATERIAL

ITEM #	QTY	PART #	DESCRIPTION	ASTM DESIGNATION
1	34	0033.03610	W6x25, THREE RAIL POST @ 2'-9" OA ON 1 1/4x10x1'-2" B.P.	A572 Gr. 50
2	2	0033.91052	HSS 3" X 5" X 1/4" RAIL @ 23'-6 3/4"	A500 Gr. B
3	2	0033.91053	HSS 3" X 5" X 1/4" RAIL @ 23'-2 1/2"	A500 Gr. B
4	4	0033.91054	HSS 3" X 5" X 1/4" RAIL @ 30'-11 1/2"	A500 Gr. B
4	2	0033.91064	HSS 3" X 5" X 1/4" RAIL @ 18'-9 3/4"	A500 Gr. B
5	4	0033.91055	HSS 6" X 6" X 3/16" RAIL @ 25'-6 3/4"	A500 Gr. B
6	4	0033.91056	HSS 6" X 6" X 3/16" RAIL @ 23'-2 1/2"	A500 Gr. B
7	8	0033.91057	HSS 6" X 6" X 3/16" RAIL @ 30'-11 1/2"	A500 Gr. B
7	4	0033.91065	HSS 6" X 6" X 3/16" RAIL @ 20'-9 3/4"	A500 Gr. B
8	8	0033.00840	2-1/8" X 4-1/4" FIX. SPLICE BAR @ 2'-3"	A572 Gr. 50
9	16	0033.00640	HSS 5" X 5" X 5/16" FIX. SPLICE TUBE @ 2'-3"	A500 Gr. B, A572 Gr. 50
10	34	0033.00220	3/8" X 10" X 14" ANCHOR PLATES (END POST)	A572 Gr. 50
11	34	0033.90050	1/8" X 10" X 14" FABRIC PAD	AASHTO M251
12	136	0042.21013	Ø 1" X 13" ANCHOR STUDS, W/ 2 1/4" THD. EACH END	A449 Gr. 1, CLASS 8.8
13	272	0080.18901	Ø 1" HEAVY HEX NUTS	A563
14	272	0080.18911	Ø 1" FLAT WASHERS	F436
15	136	0080.18905	Ø 1" HEX JAM NUTS	A563
16	136	0080.07500	Ø 7/8" X 8" ROUND HEAD BOLT, NUT, SQ. WASHER, L.W.	A449, A563, F436, ASME D18.2
17	34	0080.06400	Ø 3/4" X 8" HEX BOLT, NUT, (2) F.W., & L.W.	A325, A563, F436, & ASME D18.2
18	68	0080.06140	Ø 3/4" X 2-3/4" HEX BOLT, NUT, (2) F.W., & L.W.	A325, A563, F436, & ASME D18.2
19	64	0080.06340	Ø 3/4" X 7-1/2" HEX BOLT, NUT, & (2) F.W.	A325, A563, & F436
20	32	0080.06255	Ø 3/4" X 4-1/2" HEX BOLT, NUT, & (2) F.W.	A325, A563, & F436
21	34	0033.00500	L5" X 5" X 5/8" RAILING ANGLE @ 6"	A572 Gr. 50
22	TBD		DELINEATORS - NOT SHOWN	(SUPPLIED BY CUSTOMER)

GENERAL NOTES:

1) ALL RAILING IS TO BE FABRICATED AND ERECTED ACCORDING TO SECTION 525 OF THE STANDARD SPECIFICATIONS.
2) PRIOR TO GALVANIZING THE ASSEMBLED POST, GRIND ALL EDGES TO A MINIMUM RADIUS OF 1/16".
3) BOLTS SHALL BE TORQUED SNUG TIGHT (APPROXIMATELY 100 FT-LB).
4) RAIL TUBE EXPANSION JOINTS SHALL BE PROVIDED IN ANY RAIL BAY SPANNING THE END OF AN INTEGRAL ABUTMENT BRIDGE AND AT ALL SUPER STRUCTURE EXPANSION JOINTS. EXPANSION JOINT WIDTH SHALL BE 4"@ 68°F AND WILL BE ADJUSTED IN THE FIELD BY THE ENGINEER FOR OTHER TEMPERATURES.
5) RETROREFLECTIVE MATERIAL SHALL MEET THE REQUIREMENTS OF SUBSECTION 750.08 AND SHALL BE A .063" ALUMINUM BACKING WHITE OR YELLOW REFLECTOR. WHITE IS TO BE INSTALLED ON THE DRIVERS RIGHT, FOR ONE WAY BRIDGES , YELLOW IS TO BE INSTALLED ON THE DRIVERS LEFT.
6) PROTRUSIONS CAUSED BY WELDING OR GALVANIZING ARE NOT PERMITTED ON THE ADJOINING SURFACES OF THE BOX BEAM RAILS, SPLICE TUBES AND FILL PLATES.
7) THE MINIMUM DISTANCE FROM THE POST TO AN EXPANSION JOINT SHALL BE DETERMINED BY THE MINIMUM EDGE DISTANCE OF 5" FROM ANY ANCHOR STUD TO THE END OF THE SLAB, OR THE EXPANSION JOINT RECESS POUR, IF ONE IS USED.
8) ALL POST SHALL BE SET NORMAL TO GRADE. THE MAXIMUM CENTER TO CENTER SPACING OF BRIDGE RAIL POST IS 8' 3".
9) ANY BENDING OF RAIL SHALL BE DONE AT THE FABRICATION PLANT ACCORDING TO A PROCEDURE PROVIDED BY THE FABRICATOR.
10) STD. SPLICE HOLES ONLY IN BRIDGE RAIL TUBES. REST TO BE DRILLED BY CUSTOMER. FIELD DRILLED HOLES TO BE COATED WITH AN APPROVED ZINC-RICH PAINT PRIOR TO INSTALLATION.
11) THIS RAILING MEETS THE REQUIREMENTS FOR A TL-4 SERVICE LEVEL.

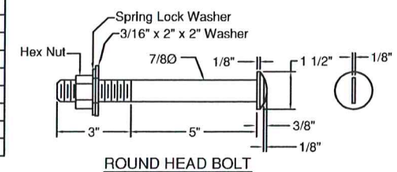

ROUND HEAD BOLT

ITEM #: 525.335

F.R. LAFAYETTE, CAVENDISH

SHEET 1 OF 2

APPROVED BY:

BRIDGE RAIL DETAILS SHEET

CAVENDISH, ER BRF 0416 (13), ROUTE VT 131, OVER TWENTY MILE STREAM
VERMONT

REV	NO.	DATE	DESCRIPTION	BY
	1	1/13/14	REVISED PER 1/13/14 EMAIL	E.P.

REV	NO.	DATE	DESCRIPTION	BY

ELDERLEE, INC.
OAKS CORNERS, NEW YORK 14518
E-Mail: dlong@elderlee.com
Tel: 315-789-6670 Fax: 315-789-6615

CERTIFIED FABRICATOR

DRAWN	E.P.	11/13/13
CHECKED	D.L.	11/20/13
APPROVED	.	.
SCALE	SCHEMATIC	
DRAWING NO.	F.R. LAFAYETTE, CAVENDISH	

SPLICE BAR - FIXED

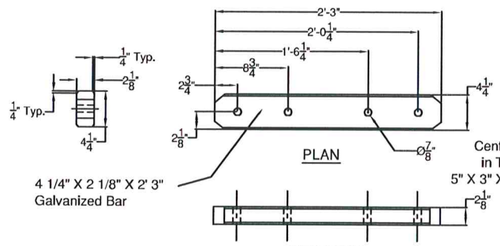

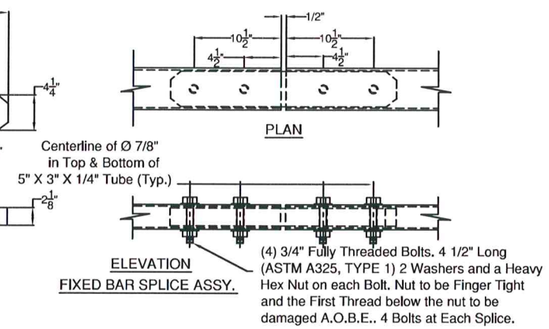

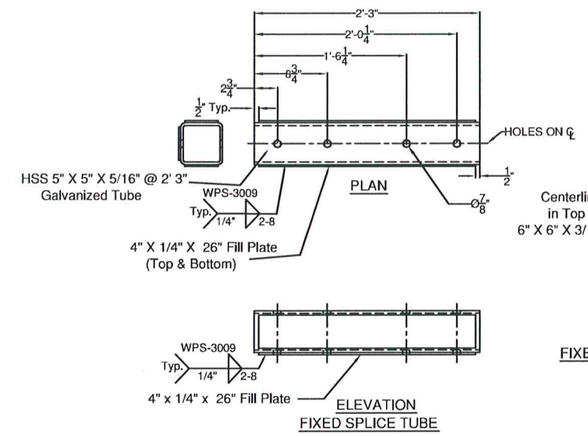

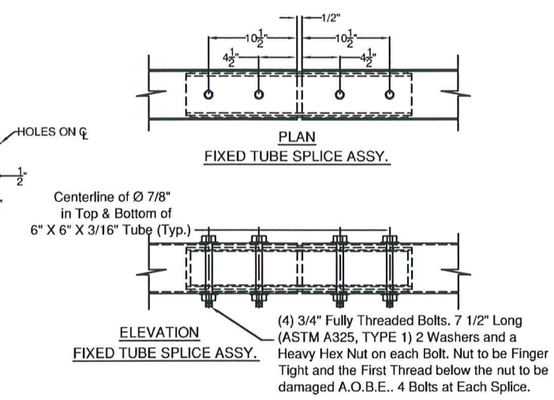

SPLICE TUBE - FIXED

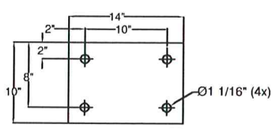

1/8" FABRIC PAD

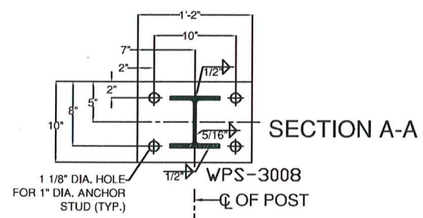

SECTION A-A

BRIDGE POST DETAIL

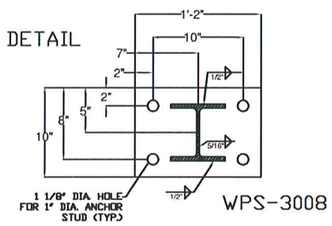

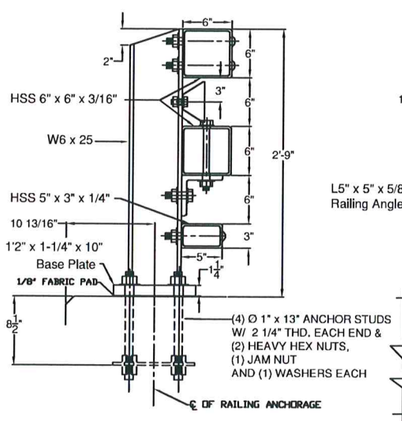

SECTION

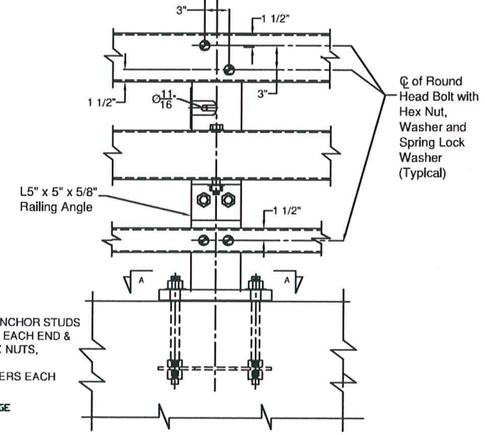

ELEVATION

STEEL BRIDGE RAILING

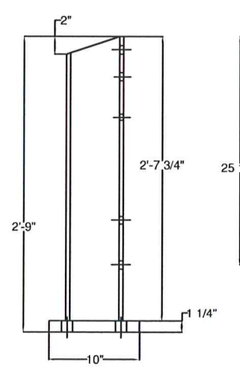

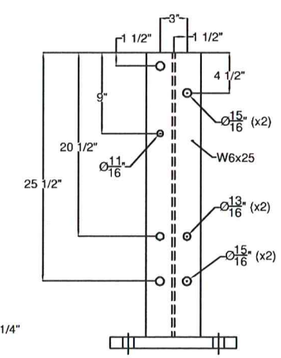

ITEM #: 525.335

F.R. LAFAYETTE, CAVENDISH

SHEET 2 OF 2

APPROVED BY:

BRIDGE RAIL DETAILS SHEET

CAVENDISH, ER BRF 0416 (13), ROUTE VT 131, OVER TWENTY MILE STREAM
VERMONT

REV	NO.	DATE	DESCRIPTION	BY
	1	1/13/14	REVISED PER 1/13/14 EMAIL	E.P.

REV	NO.	DATE	DESCRIPTION	BY

ELDERLEE, INC.
OAKS CORNERS, NEW YORK 14518
E-Mail: dlong@elderlee.com
Tel: 315-789-6670 Fax: 315-789-6615

AISC CERTIFIED FABRICATOR

DRAWN	E.P.	11/13/13
CHECKED	D.L.	11/20/13
APPROVED	.	.
SCALE	SCHEMATIC	
DRAWING NO.	F.R. LAFAYETTE, CAVENDISH	

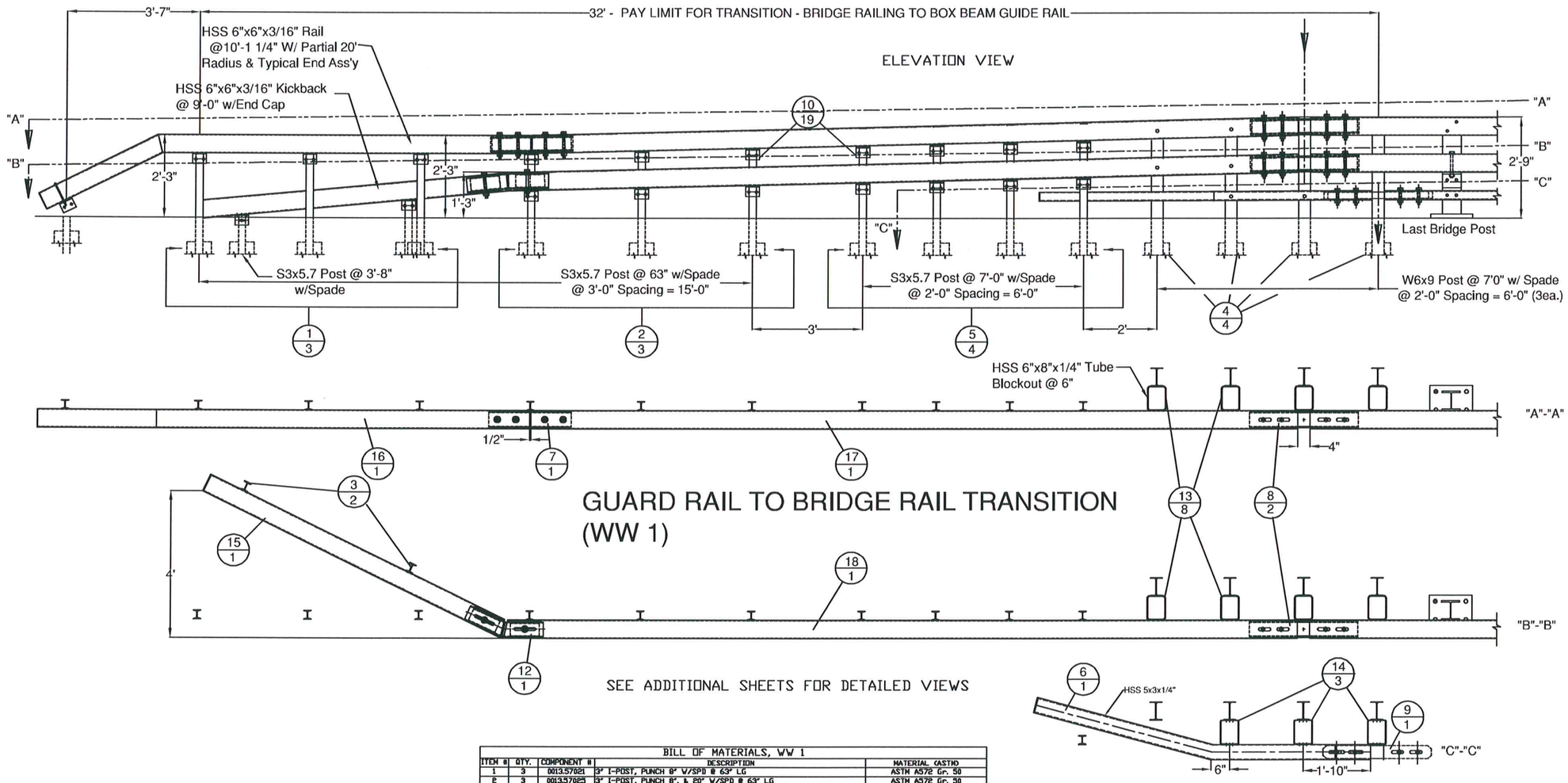

HARDWARE NOTES	
ITEM #	FUNCTION
19	BOLT RAIL TO SHELF ANGLE (ITEM #10)
20	BOLT SHELF ANGLE (ITEM #'S 10 & 11) TO POST
21	BOLT BLOCK-OUTS (ITEM #'S 13 & 14) TO HEAVY POST
22	(4) PER SPLICE BAR (ITEM #9)
23	(4) PER SPLICE TUBING (ITEM #'S 7 & 8)
24	BOLT RAIL (ITEMS #'S 6,17, & 18 TO BLOCK-OUTS (ITEM #'S 13 & 14) (WHERE FASTENED)
25	BOLT DOUBLE BEND SPLICE TUBE (ITEM #12) TO RAIL (ITEM #18) & KICKBACK (ITEM #15)

BILL OF MATERIALS, WW 1

ITEM #	QTY.	COMPONENT #	DESCRIPTION	MATERIAL (ASTM)
1	3	0013.57021	3" I-POST, PUNCH 8" W/SPD @ 63" LG	ASTM A572 Gr. 50
2	3	0013.57025	3" I-POST, PUNCH 8", & 20" W/SPD @ 63" LG	ASTM A572 Gr. 50
3	2	0013.57060	3" I-END POST W/SPD @ 3'-8" LG	ASTM A572 Gr. 50
4	4	0013.09001	W6X9 POST @ 7' W/SPD & 5/8" HOLES	ASTM A572 Gr. 50
5	4	0013.57010	3" I-POST, PUNCH 8" & 20", W/8X32" SPADE @7'	ASTM A572 Gr. 50
6	1	0033.80403	3X5" BTM TRANS RAIL W/5'-0" KB, EXP END	A500 Gr. B
7	1	0033.00640	HSS 5X5 TUBE SPLICE @27" LG W/ 1/4" SHIMS	A500 Gr. B / A572 Gr 50
8	2	0033.00730	HSS 5X5 EXP TUBE SPLICE @ 36" LG W/ 1/4" SHIMS	A500 Gr. B / A572 Gr 50
9	1	0033.00930	BR EXP BAR SPLICE 2-1/8" X 4-1/4" @ 36" LG	ASTM A36
10	19	0054.00050	REG BB SHELF ANGLES @ 4-1/2"	ASTM A36
12	1		HSS 5X5 DBL BEND TUBE SPL @ 27" LG & 40°ANGLE	A500 Gr. B / A572 Gr 50
13	8	0054.00563	6X8" TRANS. TUBE B/O @ 6" LG	A500 Gr. B
14	3	0054.00565	6X8" TRANS. TUBE B/O @ 3" LG	A500 Gr. B
15	1		6X6" BB @ 9'-0" KICKBACK, W/ CAP & 20° ANGLE	A500 Gr. B / A36
16	1		6X6" BB @ 17'-11 1/2", DRILL 3' CC, W/ 20' RADIUS & END ASS'Y	A500 Gr. B
17	1		6X6" BB TOP TRANS @ 20'-9 5/8" LG W/EXP END, & PARTIAL RAD.	A500 Gr. B
18	1		6X6" BB BTM TRANS @ 21'-4 5/8" LG W/EXP END & PARTIAL RAD.	A500 Gr. B
19	18	0080.03555	3/8" X 7 1/2" BOLT, NUT, & 2 FW	A307, A563, F436
20	19	0080.04100	1/2" x 1-1/2" BOLT, NUT, & FW	A307, A563, F436
21	22	0080.04120	1/2" x 1-1/2" BOLT, NUT, 2 FW & LW	A307, A563, F436
22	4	0080.06255	3/4" X 4-1/2" BOLT, NUT, 2 FW	A325, A563, F436
23	12	0080.06340	3/4" X 7-1/2" BOLT, NUT, 2 FW	A325, A563, F436
24	6	0080.06370	3/4" X 8" CARR BOLT, NUT, FW & LW	A307, A563, F436
25	2	0080.06400	3/4" X 8" BOLT, NUT, 2 FW, & LW	A325, A563, F436

ITEM #: 621.725

F.R. LAFAYETTE, CAVENDISH

SHEET 1 OF 10

APPROVED BY:

GUARD RAIL TO BRIDGE RAIL TRANSITION DETAILS SHEET

CAVENDISH, ER BRF 0416 (13), ROUTE VT 131, OVER TWENTY MILE STREAM

VERMONT

REV	NO.	DATE	DESCRIPTION	BY
	1	2/17/14	REVISED PER 12/20/13 MARK-UP	EP

NO.	DATE	DESCRIPTION	BY

ELDERLEE, INC.
OAKS CORNERS, NEW YORK 14518
E-Mail: dlong@elderlee.com.
Tel: 315-789-6670 Fax: 315-789-6615

AISC CERTIFIED FABRICATOR

DRAWN	E.P.	11/13/13
CHECKED	D.L.	11/20/13
APPROVED	.	.
SCALE	SCHEMATIC	
DRAWING NO.	F.R. LAFAYETTE, CAVENDISH	

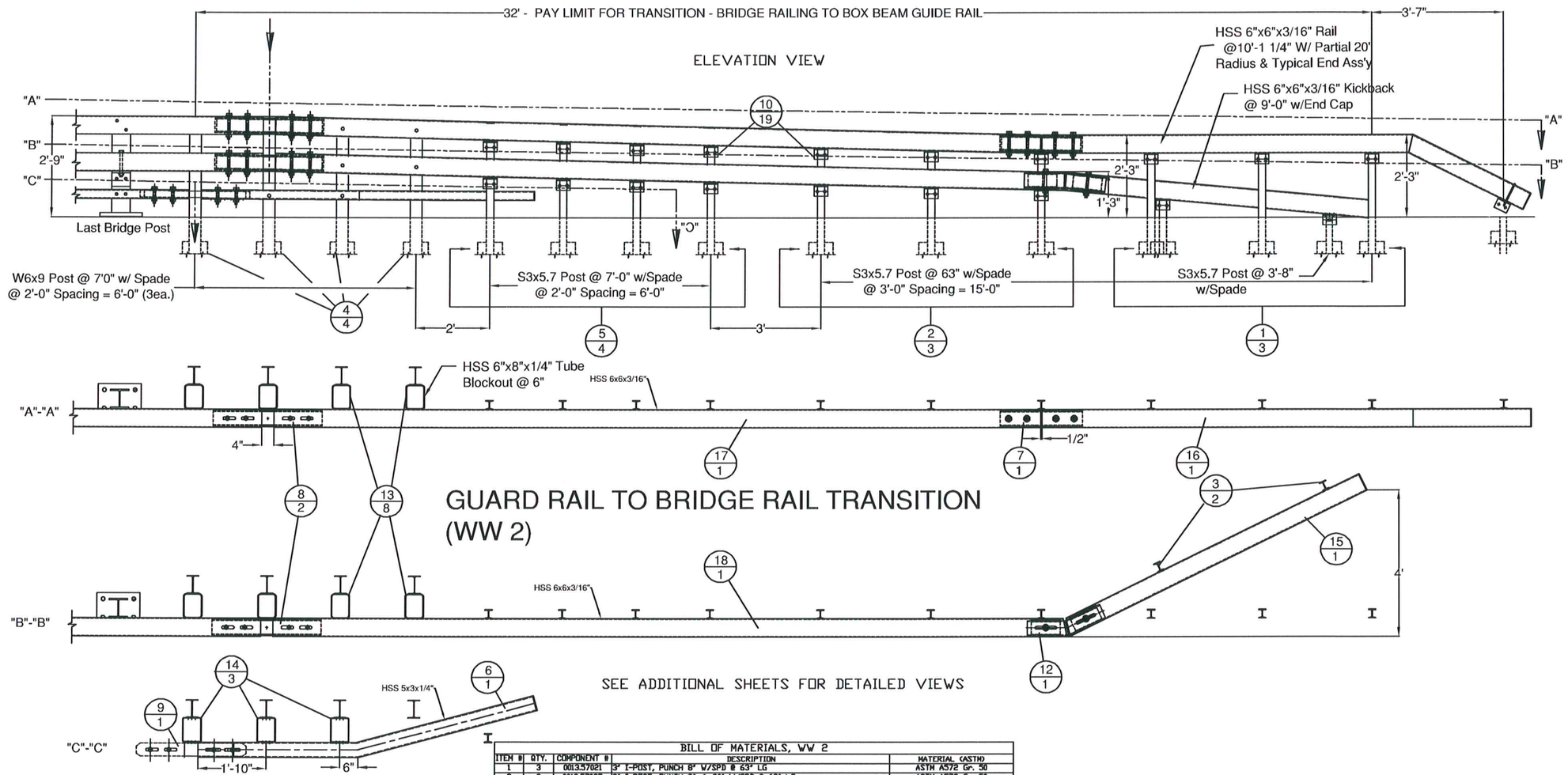

HARDWARE NOTES	
ITEM #	FUNCTION
19	BOLT RAIL TO SHELF ANGLE (ITEM #10)
20	BOLT SHELF ANGLE (ITEM #'S 10 & 11) TO POST
21	BOLT BLOCK-OUTS (ITEM #'S 13 & 14) TO HEAVY POST
22	(4) PER SPLICE BAR (ITEM #9)
23	(4) PER SPLICE TUBING (ITEM #'S 7 & 8)
24	BOLT RAIL (ITEMS #'S 6,17, & 18 TO BLOCK-OUTS (ITEM #'S 13 & 14) (WHERE FASTENED)
25	BOLT DOUBLE BEND SPLICE TUBE (ITEM #12) TO RAIL (ITEM #18) & KICKBACK (ITEM #15)

BILL OF MATERIALS, WW 2

ITEM #	QTY.	COMPONENT #	DESCRIPTION	MATERIAL (ASTM)
1	3	0013.57021	3" I-POST, PUNCH 8" W/SPD @ 63" LG	ASTM A572 Gr. 50
2	3	0013.57025	3" I-POST, PUNCH 8", & 20" W/SPD @ 63" LG	ASTM A572 Gr. 50
3	2	0013.57060	3" I-END POST W/SPD @ 3'-8" LG	ASTM A572 Gr. 50
4	4	0013.09001	W6X9 POST @ 7' W/SPD & 5/8" HOLES	ASTM A572 Gr. 50
5	4	0013.57010	3" I-POST, PUNCH 8" & 20", W/8X32" SPADE @7'	ASTM A572 Gr. 50
6	1	0033.80403	3X5" BTM TRANS RAIL W/5'-0" KB, EXP END	A500 Gr. B
7	1	0033.00640	HSS 5X5 TUBE SPLICE @27" LG W/ 1/4" SHIMS	A500 Gr. B / A572 Gr 50
8	2	0033.00730	HSS 5X5 EXP TUBE SPLICE @ 36" LG W/ 1/4" SHIMS	A500 Gr. B / A572 Gr 50
9	1	0033.00930	BR EXP BAR SPLICE 2-1/8" X 4-1/4" @ 36" LG	ASTM A36
10	19	0054.00050	REG BB SHELF ANGLES @ 4-1/2"	ASTM A36
12	1		HSS 5X5 DBL BEND TUBE SPL @ 27" LG & 45°ANGLE	A500 Gr. B / A572 Gr 50
13	8	0054.00563	6X8" TRANS. TUBE B/O @ 6" LG	A500 Gr. B
14	3	0054.00565	6X8" TRANS. TUBE B/O @ 3" LG	A500 Gr. B
15	1		6X6" BB @ 9'-0" KICKBACK, W/ CAP & 22° ANGLE	A500 Gr. B / A36
16	1		6X6" BB @ 17'-11 1/2", DRILL 3' CC, W/ 15' RADIUS & END ASS'Y	A500 Gr. B
17	1		6X6" BB TOP TRANS @ 20'-9 5/8" LG W/EXP END, & PARTIAL RAD.	A500 Gr. B
18	1		6X6" BB BTM TRANS @ 21'-4 5/8" LG W/EXP END & PARTIAL RAD.	A500 Gr. B
19	18	0080.03355	3/8" X 7 1/2" BOLT, NUT, & 2 FW	A307, A563, F436
20	19	0080.04100	1/2" x 1-1/2" BOLT, NUT, & FW	A307, A563, F436
21	22	0080.04120	1/2" x 1-1/2" BOLT, NUT, 2 FW & LW	A307, A563, F436
22	4	0080.06255	3/4" X 4-1/2" BOLT, NUT, 2 FW	A325, A563, F436
23	12	0080.06340	3/4" X 7-1/2" BOLT, NUT, 2 FW	A325, A563, F436
24	6	0080.06370	3/4" X 8" CARR BOLT, NUT, FW & LW	A307, A563, F436
25	2	0080.06400	3/4" X 8" BOLT, NUT, 2 FW, & LW	A325, A563, F436

ITEM #: 621.725

F.R. LAFAYETTE, CAVENDISH

SHEET 2 OF 10

APPROVED BY:

GUARD RAIL TO BRIDGE RAIL TRANSITION DETAILS SHEET

CAVENDISH, ER BRF 0416 (13), ROUTE VT 131, OVER TWENTY MILE STREAM

VERMONT

REV	NO.	DATE	DESCRIPTION	BY	REV	NO.	DATE	DESCRIPTION	BY
	1	2/17/14	REVISED PER 12/20/13 MARK-UP	EP					

ELDERLEE, INC.
OAKS CORNERS, NEW YORK 14518
E-Mail: dlong@elderlee.com
Tel: 315-789-6670 Fax: 315-789-6615

CERTIFIED FABRICATOR

DRAWN	E.P.	11/13/13
CHECKED	D.L.	11/20/13
APPROVED	.	.
SCALE	SCHEMATIC	
DRAWING NO.	F.R. LAFAYETTE, CAVENDISH	

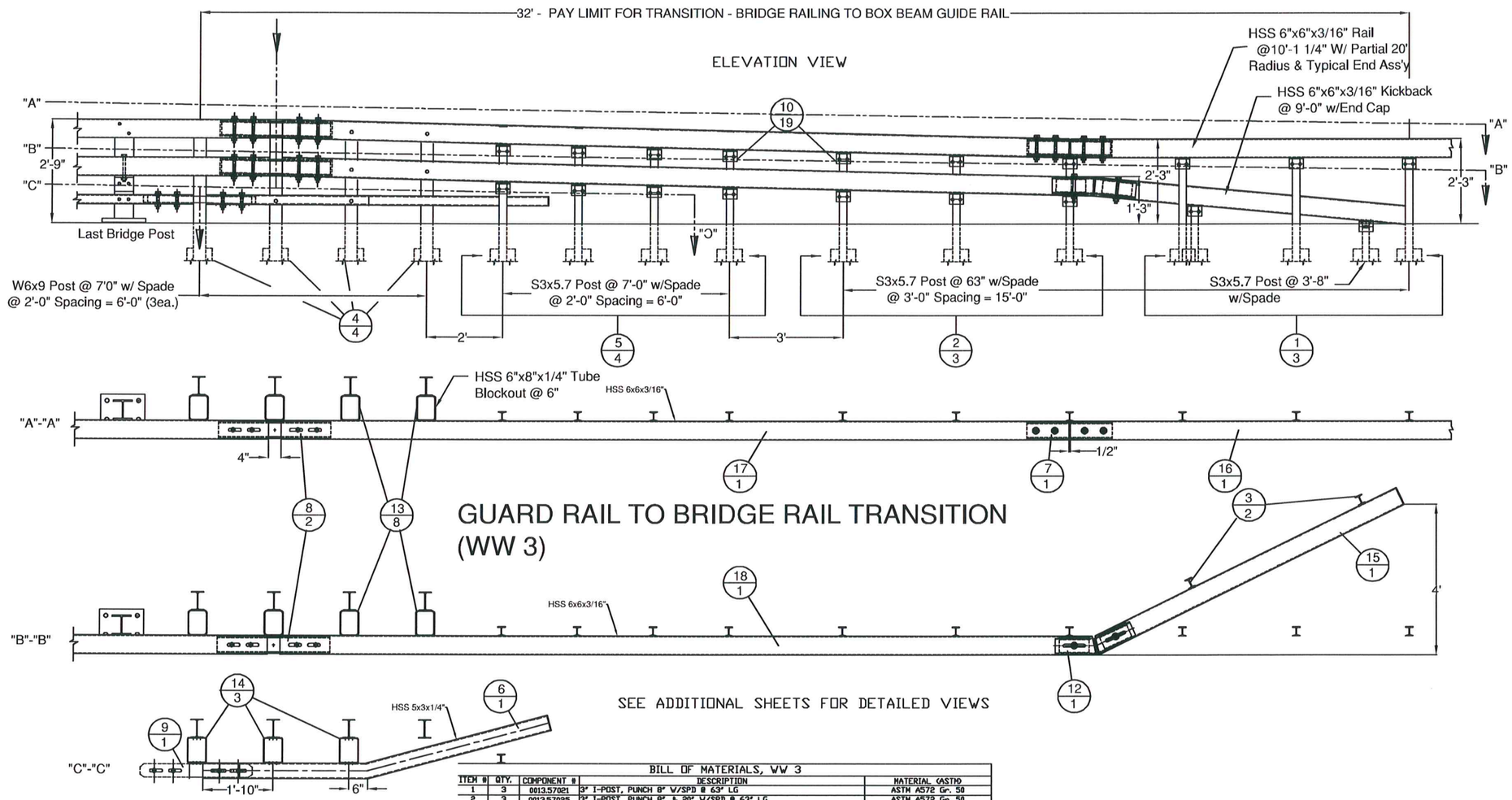

HARDWARE NOTES	
ITEM #	FUNCTION
19	BOLT RAIL TO SHELF ANGLE (ITEM #10)
20	BOLT SHELF ANGLE (ITEM #'S 10 & 11) TO POST
21	BOLT BLOCK-OUTS (ITEM #'S 13 & 14) TO HEAVY POST
22	(4) PER SPLICE BAR (ITEM #9)
23	(4) PER SPLICE TUBING (ITEM #'S 7 & 8)
24	BOLT RAIL (ITEMS #'S 6,17, & 18 TO BLOCK-OUTS (ITEM #'S 13 & 14) (WHERE FASTENED)
25	BOLT DOUBLE BEND SPLICE TUBE (ITEM #12) TO RAIL (ITEM #18) & KICKBACK (ITEM #15)

BILL OF MATERIALS, WW 3

ITEM #	QTY.	COMPONENT #	DESCRIPTION	MATERIAL (ASTM)
1	3	0013.57021	3" I-POST, PUNCH 8" W/SPD @ 63" LG	ASTM A572 Gr. 50
2	3	0013.57025	3" I-POST, PUNCH 8", & 20" W/SPD @ 63" LG	ASTM A572 Gr. 50
3	2	0013.57060	3" I-END POST W/SPD @ 3'-8" LG	ASTM A572 Gr. 50
4	4	0013.09001	W6X9 POST @ 7' W/SPD & 5/8" HOLES	ASTM A572 Gr. 50
5	4	0013.57010	3" I-POST, PUNCH 8" & 20", W/8X32" SPADE @7'	ASTM A572 Gr. 50
6	1	0033.80403	3X5" BTM TRANS RAIL W/5'-0" KB, EXP END	A500 Gr. B
7	1	0033.00640	HSS 5X3 TUBE SPLICE @27" LG W/ 1/4" SHIMS	A500 Gr. B / A572 Gr 50
8	2	0033.00730	HSS 5x3 EXP TUBE SPLICE @ 36" LG W/ 1/4" SHIMS	A500 Gr. B / A572 Gr 50
9	1	0033.00930	BR EXP BAR SPLICE 2-1/8" X 4-1/4" @ 36" LG	ASTM A36
10	19	0054.00050	REC BB SHELF ANGLES @ 4-1/2"	ASTM A36
12	1	0054.00074	HSS 5X5 DBL BEND TUBE SPL @ 27" LG.	A500 Gr. B / A572 Gr 50
13	8	0054.00563	6X8" TRANS. TUBE B/O @ 6" LG	A500 Gr. B
14	3	0054.00565	6X8" TRANS. TUBE B/O @ 3" LG	A500 Gr. B
15	1	0054.09000	6X6" BB @ 9'-0" KICKBACK, W/ CAP	A500 Gr. B / A36
16	0.5	0054.18000	6X6" BB @ 17'-11 1/2", DRILL 3" CC.	A500 Gr. B
17	1	0054.90092	6X6" BB TOP TRANS @ 20'-9 5/8" LG W/EXP END	A500 Gr. B
18	1	0054.90093	6X6" BB BTM TRANS @ 21'-4 5/8" LG W/EXP END	A500 Gr. B
19	18	0080.03355	3/8" X 7 1/2" BOLT, NUT, & 2 FW	A307, A563, F436
20	19	0080.04100	1/2" x 1-1/2" BOLT, NUT, & FW	A307, A563, F436
21	22	0080.04120	1/2" x 1-1/2" BOLT, NUT, 2 FW & LW	A307, A563, F436
22	4	0080.06255	3/4" X 4-1/2" BOLT, NUT, 2 FW	A325, A563, F436
23	12	0080.06340	3/4" X 7-1/2" BOLT, NUT, 2 FW	A325, A563, F436
24	6	0080.06370	3/4" X 8" CARR BOLT, NUT, FW & LW	A307, A563, F436
25	2	0080.06400	3/4" X 8" BOLT, NUT, 2 FW, & LW	A325, A563, F436

ITEM #: 621.725

F.R. LAFAYETTE, CAVENDISH

SHEET 3 OF 10

APPROVED BY:

GUARD RAIL TO BRIDGE RAIL TRANSITION DETAILS SHEET

CAVENDISH, ER BRF 0416 (13), ROUTE VT 131, OVER TWENTY MILE STREAM

VERMONT

REV	NO.	DATE	DESCRIPTION	BY	REV	NO.	DATE	DESCRIPTION	BY
	1	2/17/14	REVISED PER 12/20/13 MARK-UP	EP					

ELDERLEE, INC.
OAKS CORNERS, NEW YORK 14518
E-Mail: dlong@elderlee.com
Tel: 315-789-6670 Fax: 315-789-6615

CERTIFIED FABRICATOR

DRAWN	E.P.	11/13/13
CHECKED	D.L.	11/20/13
APPROVED	.	.
SCALE	SCHEMATIC	

DRAWING NO. F.R. LAFAYETTE, CAVENDISH

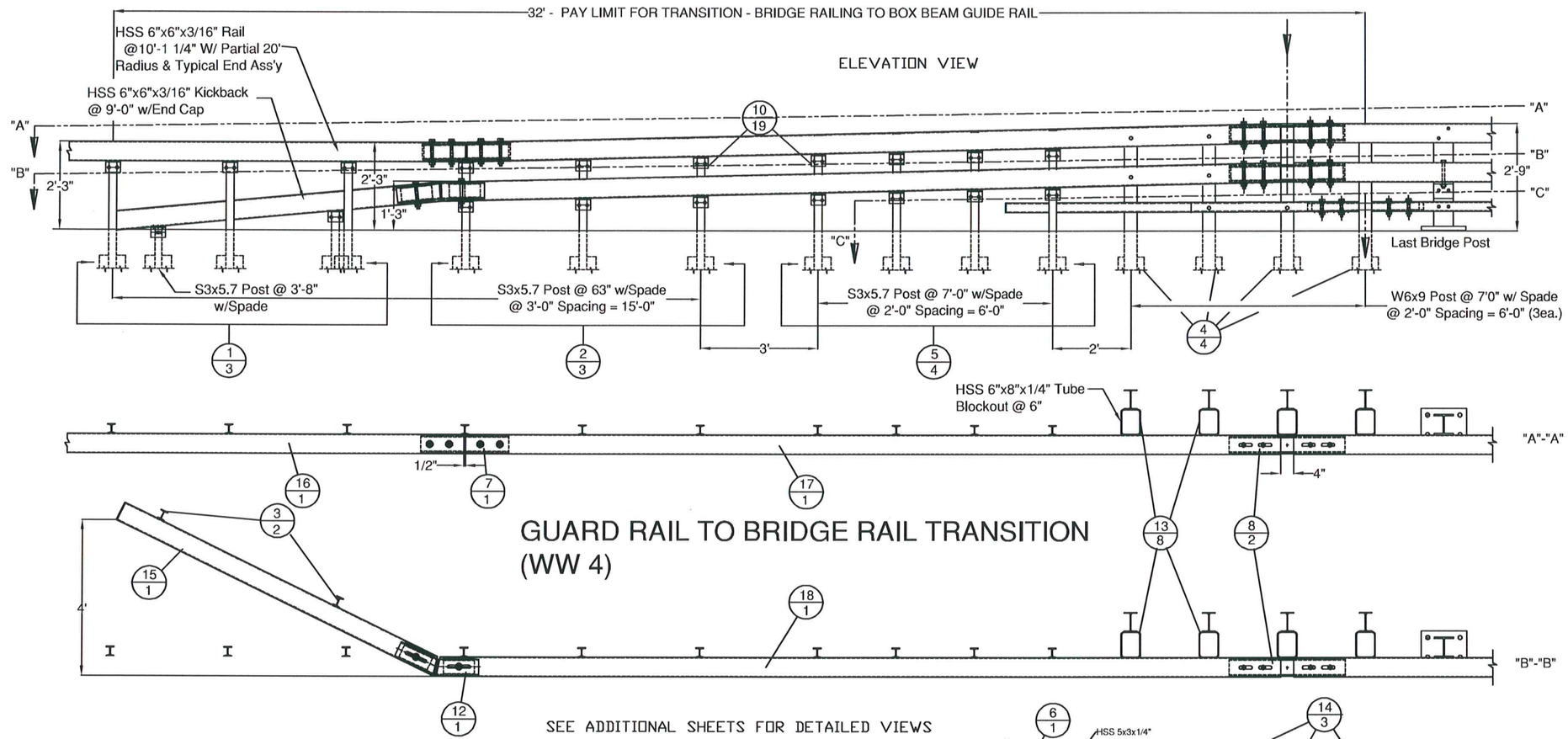

GUARD RAIL TO BRIDGE RAIL TRANSITION (WW 4)

HARDWARE NOTES	
ITEM #	FUNCTION
19	BOLT RAIL TO SHELF ANGLE (ITEM #10)
20	BOLT SHELF ANGLE (ITEM #'S 10 & 11) TO POST
21	BOLT BLOCK-OUTS (ITEM #'S 13 & 14) TO HEAVY POST
22	(4) PER SPLICE BAR (ITEM #9)
23	(4) PER SPLICE TUBING (ITEM #'S 7 & 8)
24	BOLT RAIL (ITEMS #'S 6,17, & 18 TO BLOCK-OUTS (ITEM #'S 13 & 14) (WHERE FASTENED)
25	BOLT DOUBLE BEND SPLICE TUBE (ITEM #12) TO RAIL (ITEM #18) & KICKBACK (ITEM #15)

BILL OF MATERIALS, WW 4

ITEM #	QTY.	COMPONENT #	DESCRIPTION	MATERIAL (ASTM)
1	3	0013.57021	3" I-POST, PUNCH 8" W/SPD @ 63" LG	ASTM A572 Gr. 50
2	3	0013.57025	3" I-POST, PUNCH 8", & 20" W/SPD @ 63" LG	ASTM A572 Gr. 50
3	2	0013.57060	3" I-END POST W/SPD @ 3'-8" LG	ASTM A572 Gr. 50
4	4	0013.09001	W6X9 POST @ 7' W/SPD & 5/8" HOLES	ASTM A572 Gr. 50
5	4	0013.57010	3" I-POST, PUNCH 8" & 20", W/8X32" SPADE @7'	ASTM A572 Gr. 50
6	1	0033.80403	5X5" BTM TRANS RAIL W/5'-0" KB, EXP END	A500 Gr. B
7	1	0033.00640	HSS 5X5 TUBE SPLICE @27" LG W/ 1/4" SHIMS	A500 Gr. B / A572 Gr 50
8	2	0033.00730	HSS 5x5 EXP TUBE SPLICE @ 36" LG W/ 1/4" SHIMS	A500 Gr. B / A572 Gr 50
9	1	0033.00930	BR EXP BAR SPLICE 2-1/8" X 4-1/4" @ 36" LG	ASTM A36
10	19	0054.00050	REG BB SHELF ANGLES @ 4-1/2"	ASTM A36
12	1	0054.00074	HSS 5X5 DBL BEND TUBE SPL. @ 27" LG.	A500 Gr. B / A572 Gr 50
13	8	0054.00563	6X8" TRANS. TUBE B/O @ 6" LG	A500 Gr. B
14	3	0054.00565	6X8" TRANS. TUBE B/O @ 3" LG	A500 Gr. B
15	1	0054.09000	6X6" BB @ 9'-0" KICKBACK, W/ CAP	A500 Gr. B / A36
16	0.5	0054.18000	6X6" BB @ 17'-11 1/2", DRILL 3" CC.	A500 Gr. B
17	1	0054.90092	6X6" BB TOP TRANS @ 20'-9 5/8" LG W/EXP END	A500 Gr. B
18	1	0054.90093	6X6" BB BTM TRANS @ 21'-4 5/8" LG W/EXP END	A500 Gr. B
19	18	0080.03355	3/8" X 7 1/2" BOLT, NUT, & 2 FW	A307, A563, F436
20	19	0080.04100	1/2" x 1-1/2" BOLT, NUT, & FW	A307, A563, F436
21	22	0080.04120	1/2" x 1-1/2" BOLT, NUT, 2 FW & LW	A307, A563, F436
22	4	0080.06255	3/4" X 4-1/2" BOLT, NUT, 2 FW	A325, A563, F436
23	12	0080.06340	3/4" X 7-1/2" BOLT, NUT, 2 FW	A325, A563, F436
24	6	0080.06370	3/4" X 8" CARR BOLT, NUT, FW & LW	A307, A563, F436
25	2	0080.06400	3/4" X 8" BOLT, NUT, 2 FW, & LW	A325, A563, F436

ITEM #: 621.725

F.R. LAFAYETTE, CAVENDISH

SHEET 4 OF 10

APPROVED BY:

GUARD RAIL TO BRIDGE RAIL TRANSITION DETAILS SHEET

CAVENDISH, ER BRF 0416 (13), ROUTE VT 131, OVER TWENTY MILE STREAM

VERMONT

REV	NO.	DATE	DESCRIPTION	BY	REV	NO.	DATE	DESCRIPTION	BY
	1	2/17/14	REVISED PER 12/20/13 MARK-UP	EP					

ELDERLEE, INC.
OAKS CORNERS, NEW YORK 14518
E-Mail: dlong@elderlee.com
Tel:315-789-6670 Fax:315-789-6615

AISC CERTIFIED FABRICATOR

DRAWN	E.P.	11/13/13
CHECKED	D.L.	11/20/13
APPROVED	.	.
SCALE	SCHEMATIC	
DRAWING NO.	F.R. LAFAYETTE, CAVENDISH	

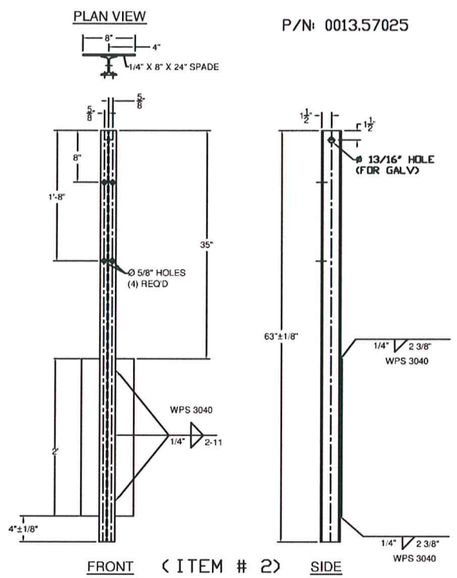

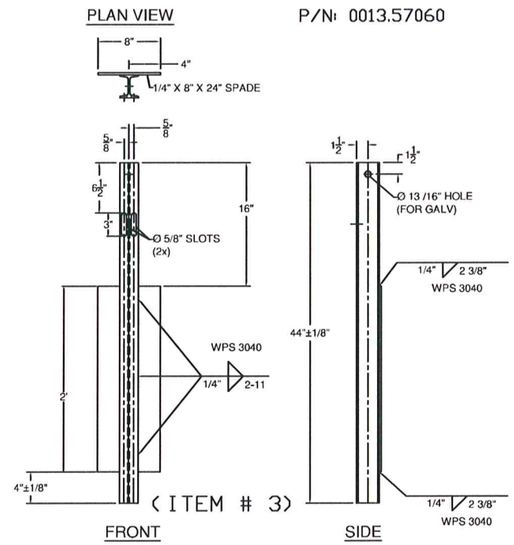

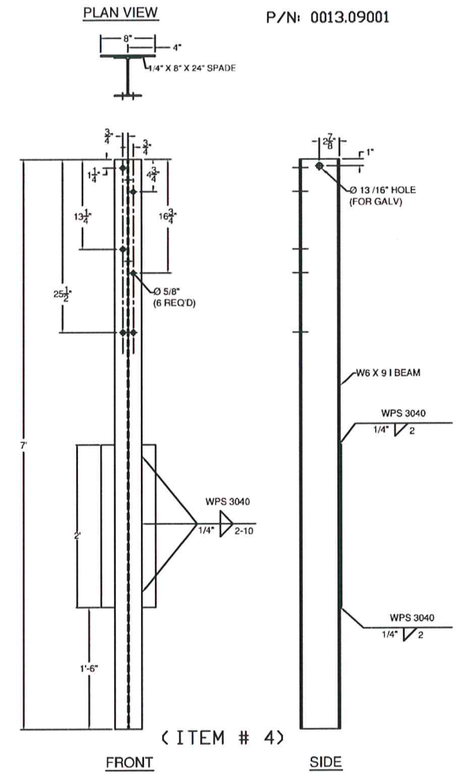

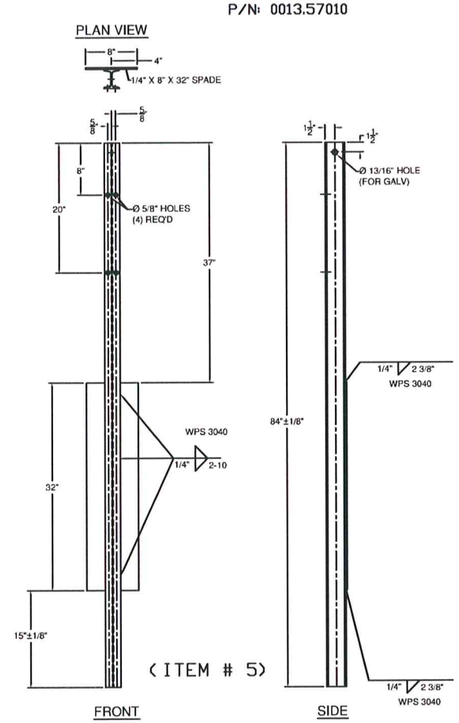

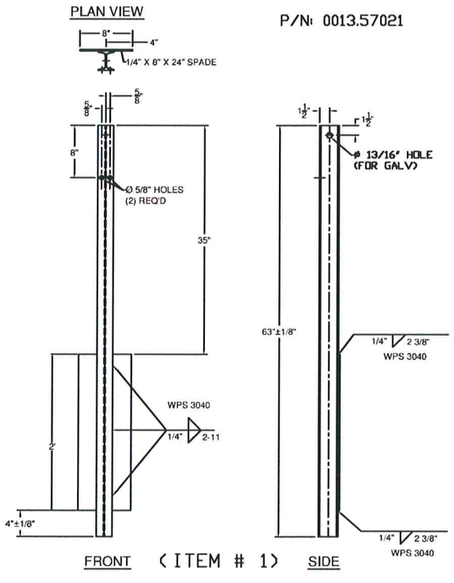

GENERAL NOTES:

1) ALL RAILING IS TO BE FABRICATED AND ERECTED ACCORDING TO SECTION 525 OF THE STANDARD SPECIFICATIONS.
2) BOLTS SHALL BE TORQUED SNUG TIGHT (APPROXIMATELY 100 FT-LB).
3) PROTRUSIONS CAUSED BY WELDING OR GALVANIZING ARE NOT PERMITTED ON THE ADJOINING SURFACES OF THE BOX BEAM RAILS, SPLICE TUBES AND FILL PLATES.
4) BOX BEAM TUBE AND STEEL POST MATERIALS, DIMENSION SIZES AND NOTES SHALL BE THE SAME AS THOSE OF THE BRIDGE RAIL, UNLESS OTHERWISE NOTED.
5) ANY BENDING OF RAIL SHALL BE DONE AT THE FABRICATION PLANT. RADII GREATER THAN 16' TO BE CURVED ON A TUBE BENDING MACHINE, RADII LESS THAN 16' TO BE "PIE CUT" AND WELDED. CURVED RAILING WIIL HAVE AN 18" LENGTH ON EACH END STRAIGHT TO ACCOMADATE SPLICES.

ITEM #: 621.725

F.R. LAFAYETTE, CAVENDISH

SHEET 5 OF 10

APPROVED BY:

GUARD RAIL TO BRIDGE RAIL TRANSITION DETAILS SHEET

CAVENDISH, ER BRF 0416 (13), ROUTE VT 131, OVER TWENTY MILE STREAM
VERMONT

REV	NO.	DATE	DESCRIPTION	BY
	1	2/17/14	REVISED PER 12/20/13 MARK-UP	EP

REV	NO.	DATE	DESCRIPTION	BY

ELDERLEE, INC.
OAKS CORNERS, NEW YORK 14518
E-Mail: dlong@elderlee.com
Tel: 315-789-6670 Fax: 315-789-6615

CERTIFIED FABRICATOR

DRAWN	E.P.	11/13/13
CHECKED	D.L.	11/20/13
APPROVED	.	.
SCALE	SCHEMATIC	

DRAWING NO. F.R. LAFAYETTE, CAVENDISH

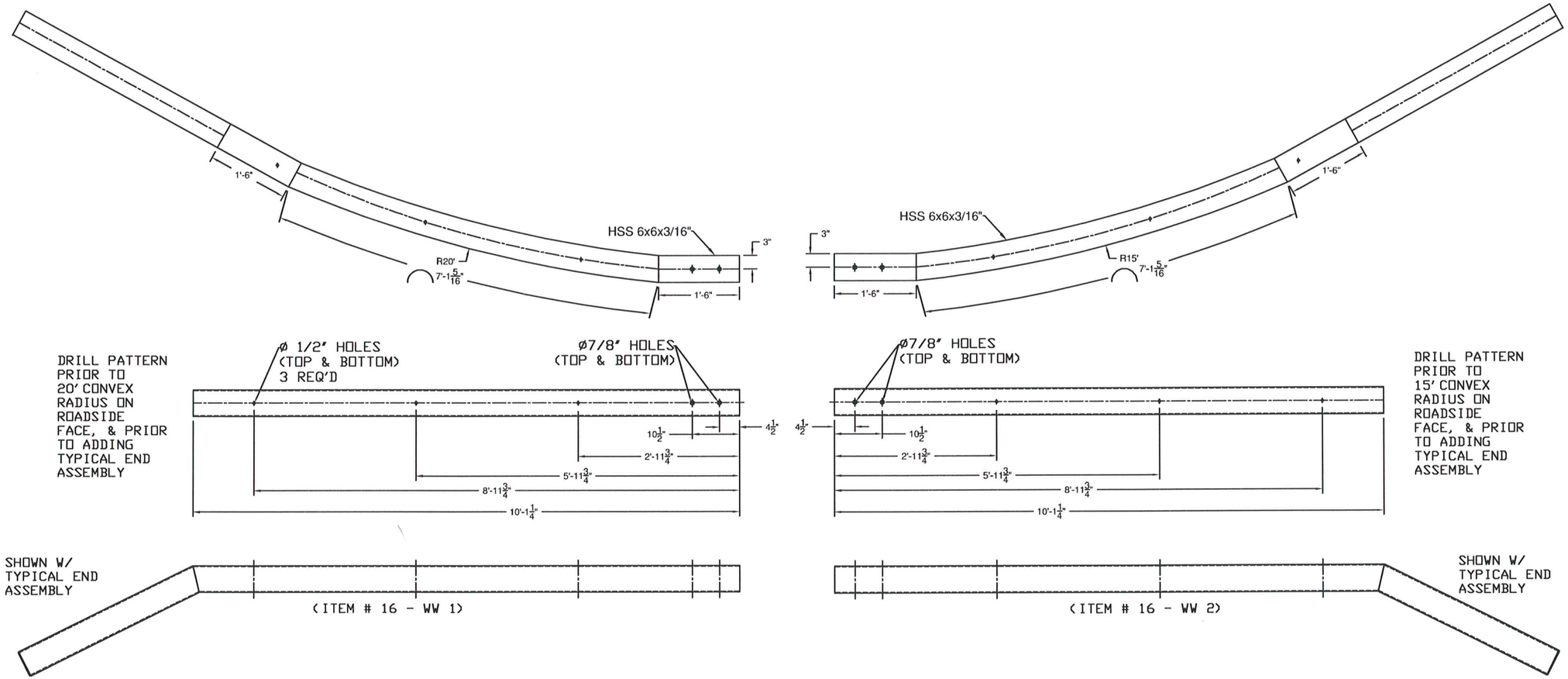

ITEM #: 621.725

F.R. LAFAYETTE, CAVENDISH

SHEET 6 OF 10

APPROVED BY:

GUARD RAIL TO BRIDGE RAIL TRANSITION DETAILS SHEET

CAVENDISH, ER BRF 0416 (13), ROUTE VT 131, OVER TWENTY MILE STREAM

VERMONT

REV	NO.	DATE	DESCRIPTION	BY
	1	2/17/14	REVISED PER 12/20/13 MARK-UP	EP

REV	NO.	DATE	DESCRIPTION	BY

ELDERLEE, INC.
OAKS CORNERS, NEW YORK 14518
E-Mail: dlong@elderlee.com
Tel: 315-789-6670 Fax: 315-789-6615

CERTIFIED FABRICATOR

DRAWN	E.P.	11/13/13
CHECKED	D.L.	11/20/13
APPROVED	.	.
SCALE	SCHEMATIC	
DRAWING NO.	F.R. LAFAYETTE, CAVENDISH	

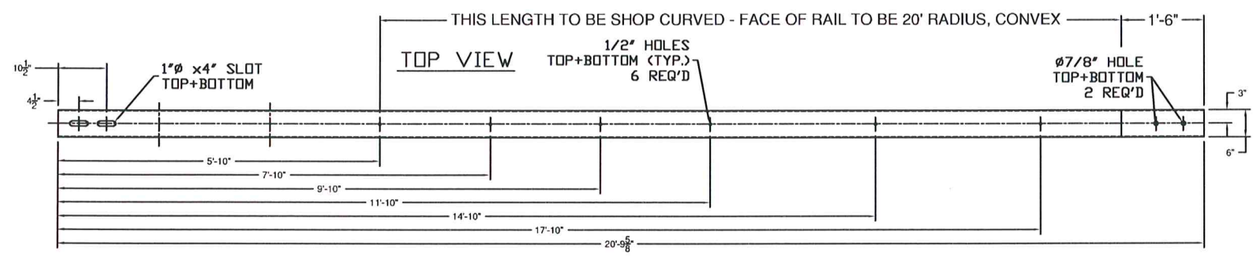

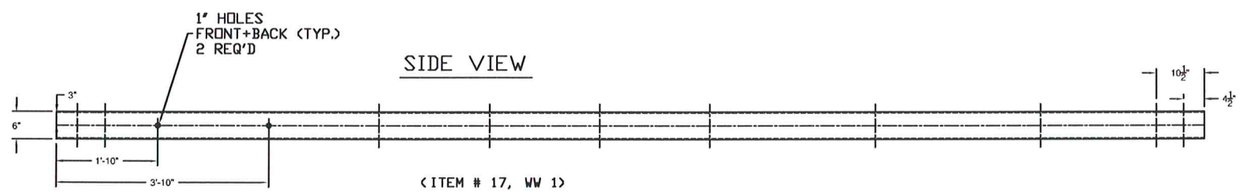

(ITEM # 17, WW 1)

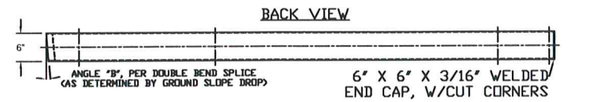

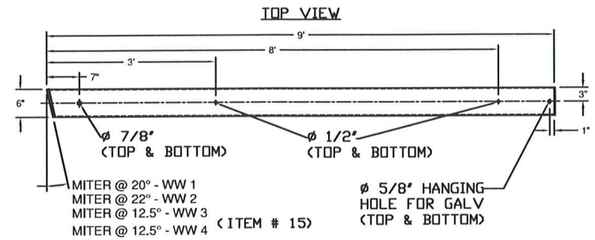

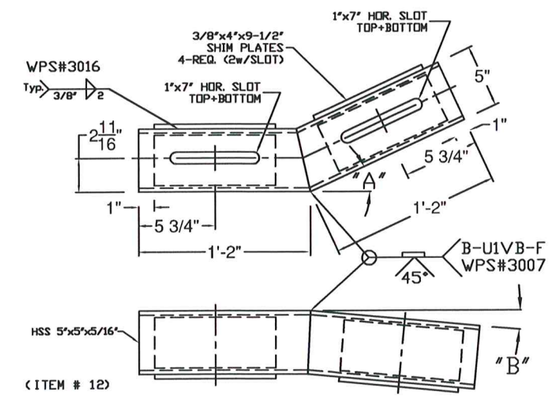

"A" - SEE PLAN FOR TURN BACK DISTANCE, SET ANGLE ACCORDINGLY. (40° FOR WW 1, 45° FOR WW2, 25° FOR WW 3 & WW 4)
"B" - TURN DOWN ANGLE SET BY THE 9" MEASURMENT AT THE END OF THE BOX BEAM. (FIELD MEASUREMENT REQ'D)

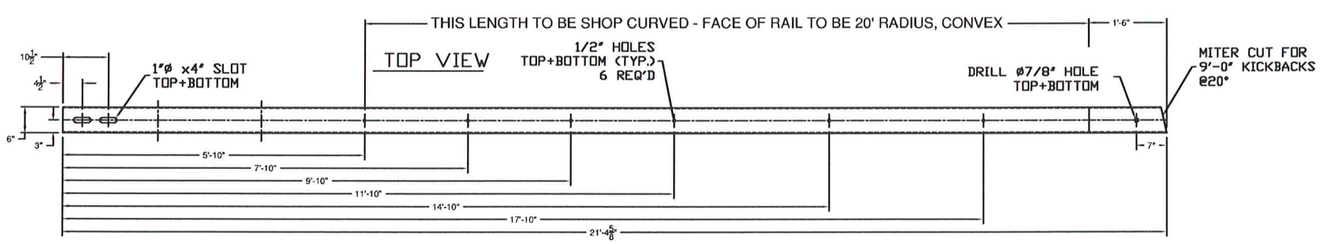

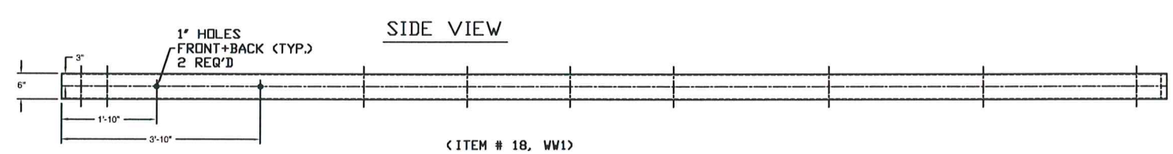

(ITEM # 18, WW1)

ITEM #: 621.725

F.R. LAFAYETTE, CAVENDISH

SHEET 7 OF 10

APPROVED BY:

GUARD RAIL TO BRIDGE RAIL TRANSITION DETAILS SHEET

CAVENDISH, ER BRF 0416 (13), ROUTE VT 131, OVER TWENTY MILE STREAM
VERMONT

REV	NO.	DATE	DESCRIPTION	BY
	1	2/17/14	REVISED PER 12/20/13 MARK-UP	EP

REV	NO.	DATE	DESCRIPTION	BY

ELDERLEE, INC.
OAKS CORNERS, NEW YORK 14518
E-Mail: dlong@elderlee.com
Tel: 315-789-6670 Fax: 315-789-6615

AISC CERTIFIED FABRICATOR

DRAWN	E.P.	11/13/13
CHECKED	D.L.	11/20/13
APPROVED	.	.
SCALE	SCHEMATIC	
DRAWING NO.	F.R. LAFAYETTE, CAVENDISH	

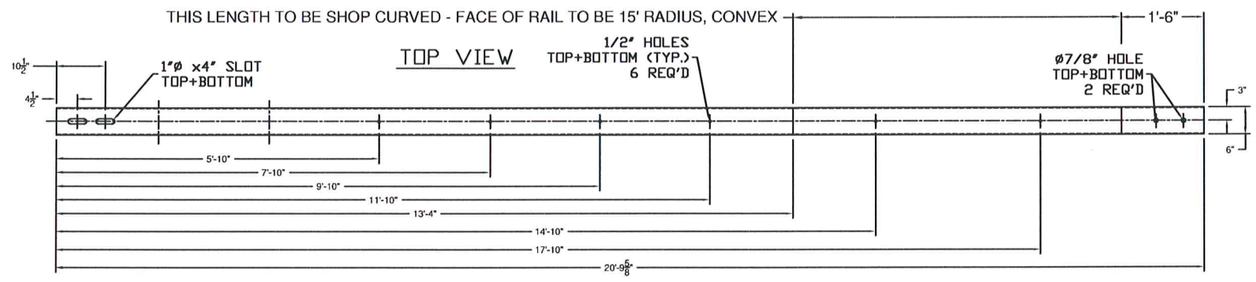

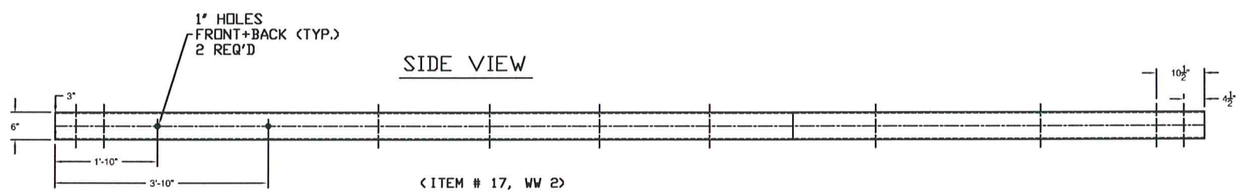

(ITEM # 17, WW 2)

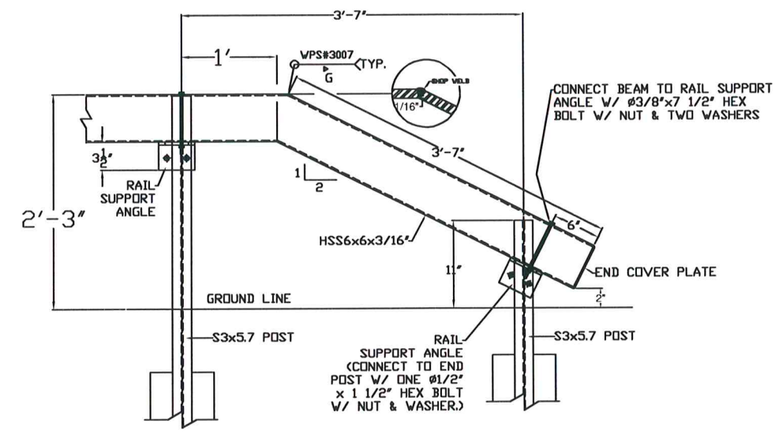

TYPICAL END ASSEMBLY DETAIL

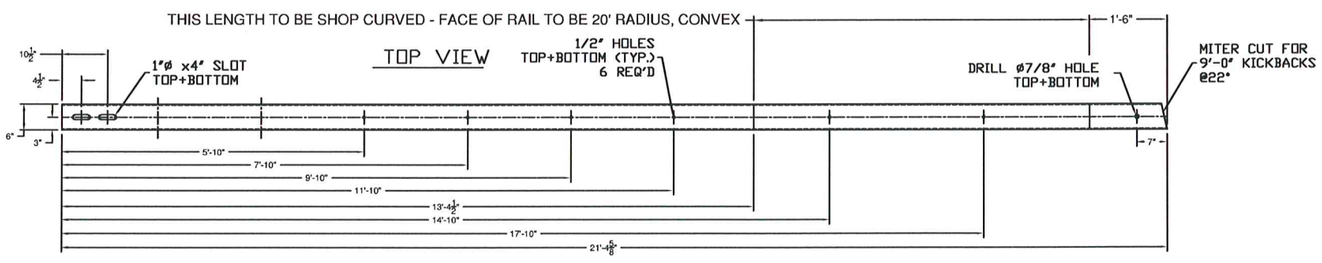

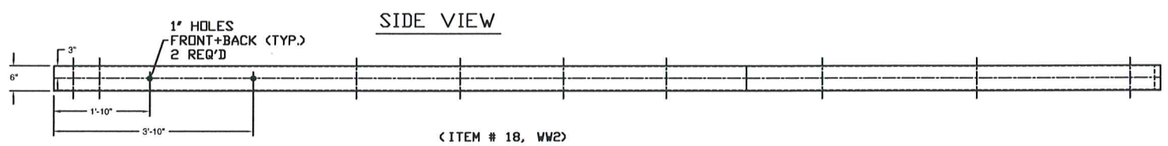

(ITEM # 18, WW2)

ITEM #: 621.725

F.R. LAFAYETTE, CAVENDISH

SHEET 8 OF 10

APPROVED BY:

GUARD RAIL TO BRIDGE RAIL TRANSITION DETAILS SHEET

CAVENDISH, ER BRF 0416 (13), ROUTE VT 131, OVER TWENTY MILE STREAM

VERMONT

REV	NO.	DATE	DESCRIPTION	BY
	1	2/17/14	REVISED PER 12/20/13 MARK-UP	EP

REV	NO.	DATE	DESCRIPTION	BY

ELDERLEE, INC.
OAKS CORNERS, NEW YORK 14518
E-Mail: dlong@elderlee.com
Tel:315-789-6670 Fax:315-789-6615

AISC CERTIFIED FABRICATOR

DRAWN	E.P.	11/13/13
CHECKED	D.L.	11/20/13
APPROVED	.	.
SCALE	SCHEMATIC	

DRAWING NO. F.R. LAFAYETTE, CAVENDISH

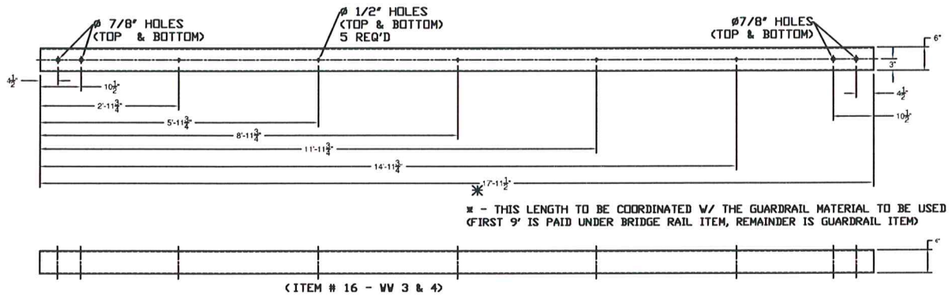

(ITEM # 16 - WW 3 & 4)

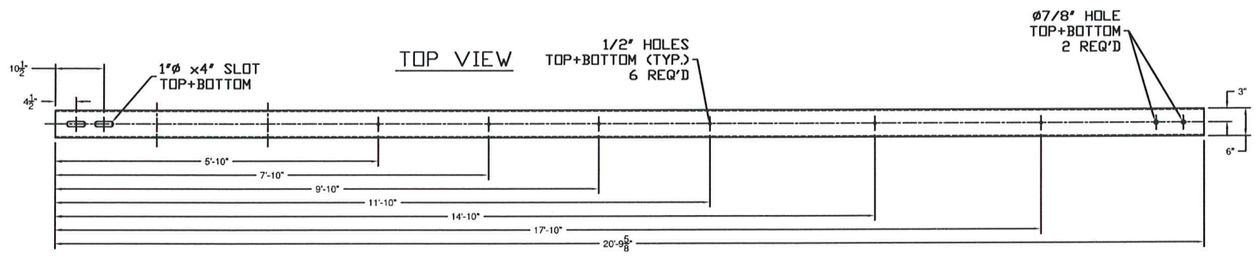

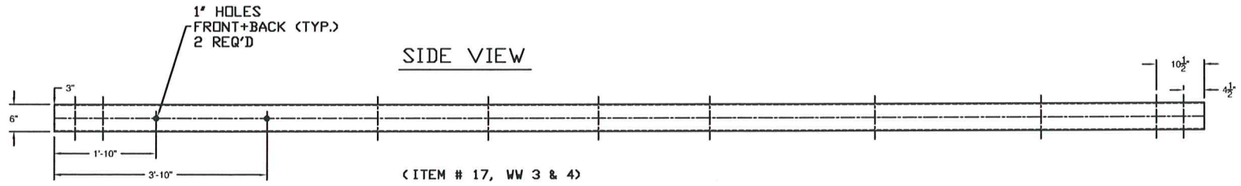

(ITEM # 17, WW 3 & 4)

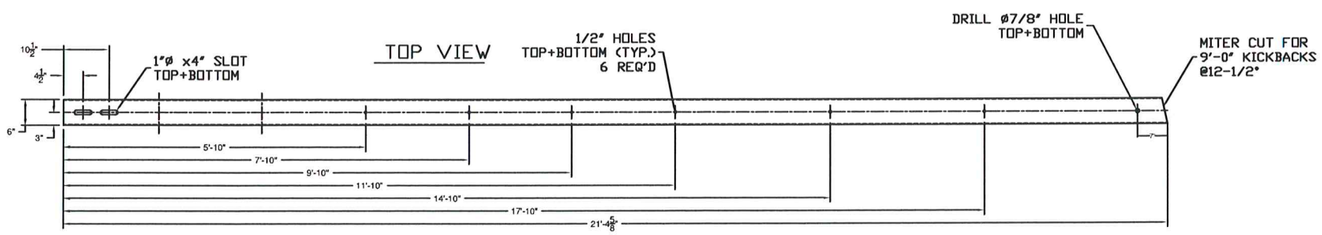

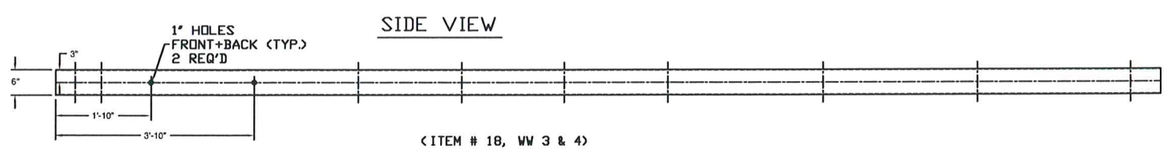

(ITEM # 18, WW 3 & 4)

ITEM #: 621.725

F.R. LAFAYETTE, CAVENDISH

SHEET 9 OF 10

APPROVED BY:

GUARD RAIL TO BRIDGE RAIL TRANSITION DETAILS SHEET

CAVENDISH, ER BRF 0416 (13), ROUTE VT 131, OVER TWENTY MILE STREAM

VERMONT

REV	NO.	DATE	DESCRIPTION	BY
	1	2/17/14	REVISED PER 12/20/13 MARK-UP	EP

REV	NO.	DATE	DESCRIPTION	BY

ELDERLEE, INC.
OAKS CORNERS, NEW YORK 14518
E-Mail: dlong@elderlee.com
Tel: 315-789-6670 Fax: 315-789-6615

CERTIFIED FABRICATOR

DRAWN	E.P.	11/13/13
CHECKED	D.L.	11/20/13
APPROVED	.	.
SCALE	SCHEMATIC	
DRAWING NO.	F.R. LAFAYETTE, CAVENDISH	

SPLICE BAR - EXPANSION

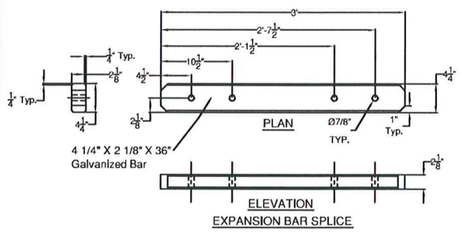

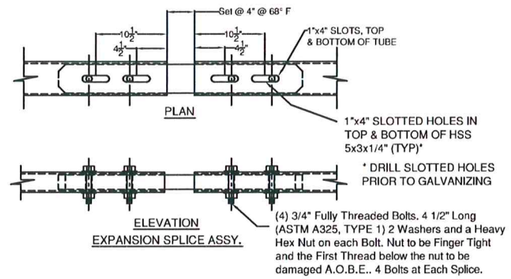

(ITEM # 9)

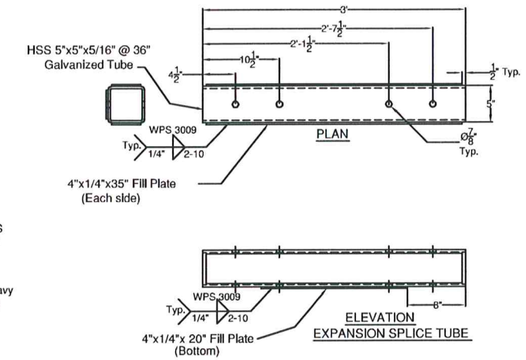

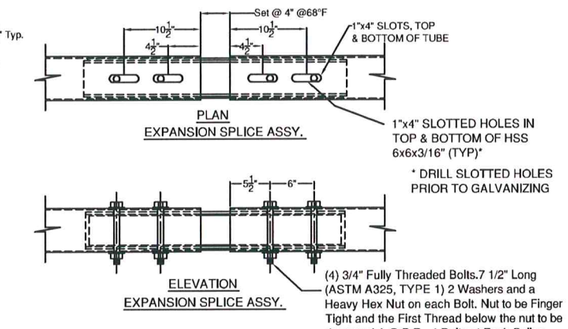

(ITEM # 8)

SPLICE TUBE - EXPANSION

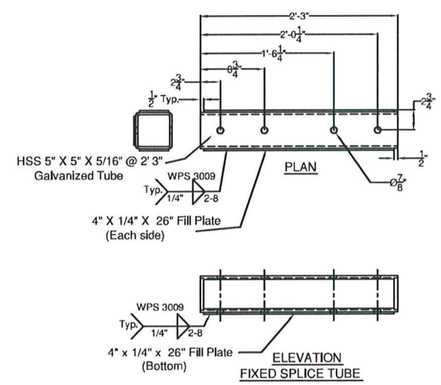

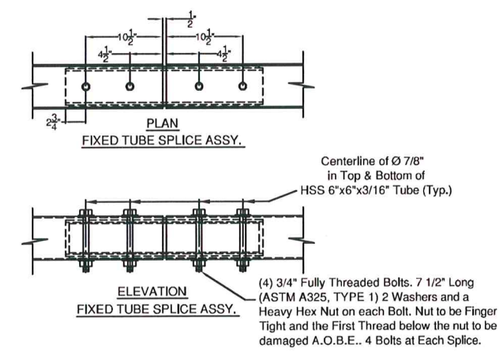

(ITEM # 7)

SPLICE TUBE - FIXED

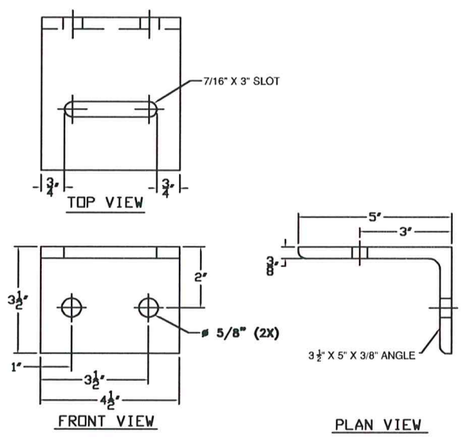

(ITEM # 10)

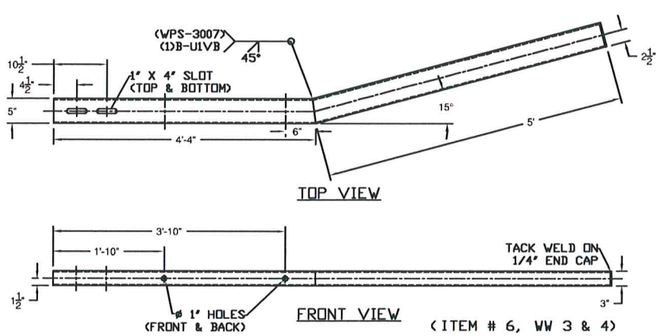

(ITEM # 6, WW 3 & 4)

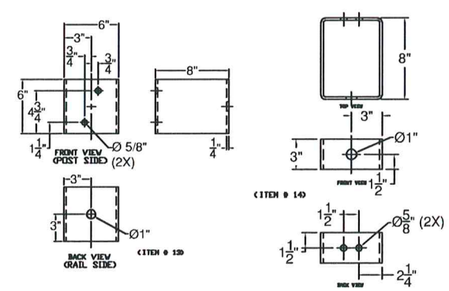

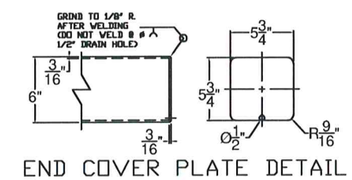

END COVER PLATE DETAIL

ITEM #: 621.725

F.R. LAFAYETTE, CAVENDISH

SHEET 10 OF 10

APPROVED BY:

GUARD RAIL TO BRIDGE RAIL TRANSITION DETAILS SHEET

CAVENDISH, ER BRF 0416 (13), ROUTE VT 131, OVER TWENTY MILE STREAM

VERMONT

REV	NO.	DATE	DESCRIPTION	BY
	1	2/17/14	REVISED PER 12/20/13 MARK-UP	EP

REV	NO.	DATE	DESCRIPTION	BY

ELDERLEE, INC.
OAKS CORNERS, NEW YORK 14518
E-Mail: dlong@elderlee.com
Tel: 315-789-6670 Fax: 315-789-6615

AISC CERTIFIED FABRICATOR

DRAWN	E.P.	11/13/13
CHECKED	D.L.	11/20/13
APPROVED	.	.
SCALE	SCHEMATIC	
DRAWING NO.	F.R. LAFAYETTE, CAVENDISH	