WELDING PROCEDURE SPECIFICATION

Material Specification	A36
Welding Process	GMAW
Manual or Machine	SEMAUTOMATIC
Position of Welding	FLAT
Filler Metal Specification	A5.18
Filler Metal Classification	L-50 .052 LINCOLN
Flux	N/A
Shielding Gas	90% ARGON /10% CO2 Dew Point -40DEG F Flow Rate 50 CFM
Single or Multiple Pass	SINGLE
Single or Multiple Arc	SINGLE
Welding Current	DC
Polarity	REVERSE
Welding Progression	STRINGER
Root Treatment	PER D1.5
Preheat and Interpass Temperature	PER D1.5
Postheat Temperature	NONE
Heat Input	Min _____ Max _____

WELDING PROCEDURE

Pass no.	Electrode size	Welding Current Amperes	Welding Current Volts	Travel speed	Joint detail
	.052	430	32	13	
Variable	LIMITS	387 TO 473	29 TO 34	12 TO 14	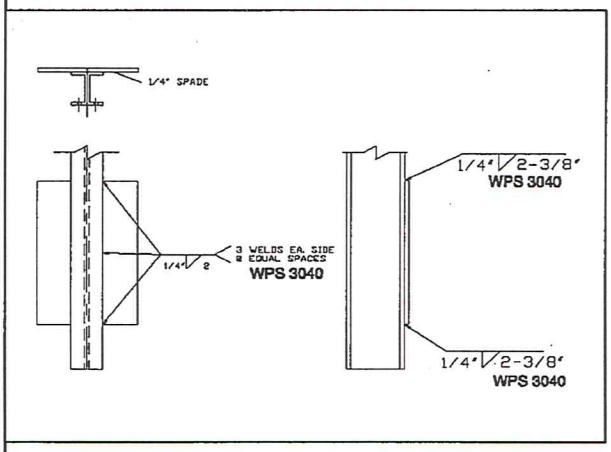

This procedure may vary due to fabrication sequence, fit-up, pass size, etc., within the limitation of variables given in Section 5.

Procedure No.	3040	Contractor	Elderlee, Inc.
Revision No.		Authorized By	RANDY SCOTT
		Date	12/20/2011

Form III-2

Form III-2-Sample Welding Procedure Specification

WELDING PROCEDURE SPECIFICATION

Material Specification	A500 GR B
Welding Process	FCAW
Manual or Machine	SEMAUTOMATIC
Position of Welding	FLAT
Filler Metal Specification	A5.20 - 95
Filler Metal Classification	E71T-1H8 E71T-9H8 LINCOLN ULTRACORE
Flux	N/A
Shielding Gas	CO 2 Dew Point -40DEG F Flow Rate 50CFH
Single or Multiple Pass	SINGLE
Single or Multiple Arc	SINGLE
Welding Current	DC
Polarity	REVERSE ELECTRODE POSITIVE
Welding Progression	STRINGER
Root Treatment	PER D1.5
Preheat and Interpass Temperature	PER D1.5
Postheat Temperature	NONE
Heat Input	Min _____ Max _____

WELDING PROCEDURE

Pass no.	Electrode size	Welding Current Amperes	Welding Current Volts	Travel speed	Joint detail
1	1/16	300	26	14	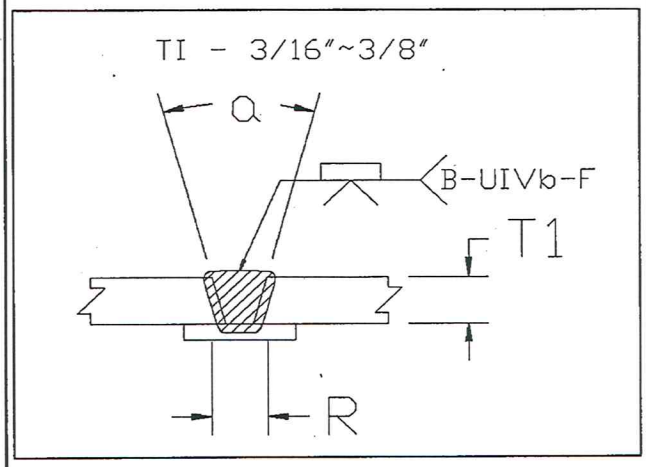
Variable	LIMITS	270 TO 330	24 TO 28	12.6 TO 15.4	

This procedure may vary due to fabrication sequence, fit-up, pass size, etc., within the limitation of variables given in Section 5.

Procedure No. 3007

Revision No. _____

Contractor Elderlee, Inc.

Authorized By RANDY SCOTT

Date 5/29/2013

Form III-2

Form III-2-Sample Welding Procedure Specification

WELDING PROCEDURE SPECIFICATION

Material Specification	A572 GRD. 50 /A992-06a
Welding Process	FCAW
Manual or Machine	SEMAUTOMATIC
Position of Welding	FLAT
Filler Metal Specification	A5.20
Filler Metal Classification	E70 LINCOLN OUTERSHEILD
Flux	N/A
Shielding Gas	CO 2 Dew Point -40DEG F Flow Rate 50 CFM (45 TO 63 CFM)
Single or Multiple Pass	SINGLE
Single or Multiple Arc	N/A
Welding Current	DC
Polarity	DCEP
Welding Progression	STRINGER
Root Treatment	PER D1.5
Preheat and Interpass Temperature	PER D1.5
Postheat Temperature	NONE
Heat Input	Min _____ Max _____

WELDING PROCEDURE

Pass no.	Electrode size	Welding Current Amperes	Welding Current Volts	Travel speed	Joint detail
1	3/32	390	27	12	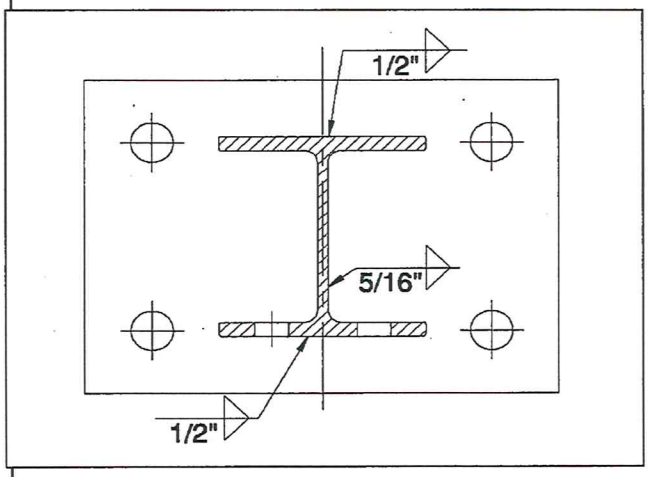
Variable	LIMITS	351 TO 429	25 TO 29	11 TO 13	

This procedure may vary due to fabrication sequence, fit-up, pass size, etc., within the limitation of variables given in Section 5.

Procedure No. 3008

Revision No. _____

Contractor Elderlee, Inc.

Authorized By RANDY SCOTT

Date 5/29/2013

WELDING PROCEDURE SPECIFICATION

Material Specification	A709 TO A500 GR B
Welding Process	FCAW
Manual or Machine	SEMAUTOMATIC
Position of Welding	FLAT
Filler Metal Specification	A5.20 - 95
Filler Metal Classification	E71T-1H8 E71T-9H8 LINCOLN ULTRACORE
Flux	N/A
Shielding Gas	CO 2 Dew Point -40DEG F Flow Rate 50CFH
Single or Multiple Pass	SINGLE
Single or Multiple Arc	SINGLE
Welding Current	DC
Polarity	REVERSE ELECTRODE POSITIVE
Welding Progression	STRINGER
Root Treatment	D1.5
Preheat and Interpass Temperature	D1.5
Postheat Temperature	NONE
Heat Input	Min _____ Max _____

WELDING PROCEDURE

Pass no.	Electrode size	Welding Current Amperes	Welding Current Volts	Travel speed	Joint detail
1	1/16	300	26	14	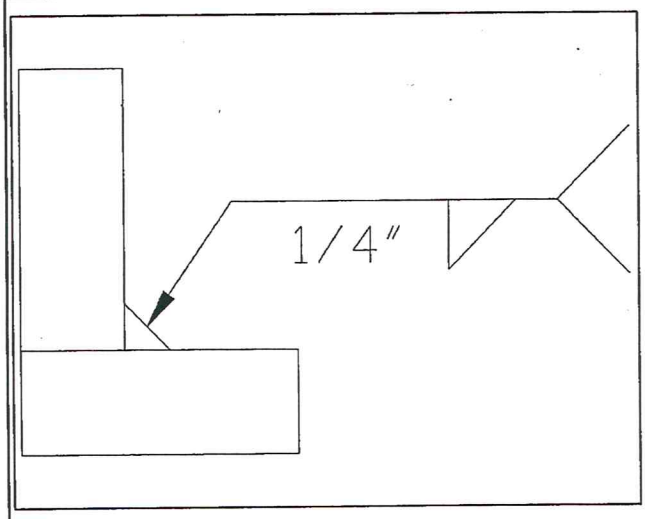
Variable	LIMITS	270 TO 330	24 TO 28	12.6 TO 15.4	

This procedure may vary due to fabrication sequence, fit-up, pass size, etc., within the limitation of variables given in Section 5.

Procedure No. 3009

Revision No. _____

Contractor Elderlee, Inc.

Authorized By RANDY SCOTT

Date 5/22/2013

Form III-2