SPLICE BAR - EXPANSION

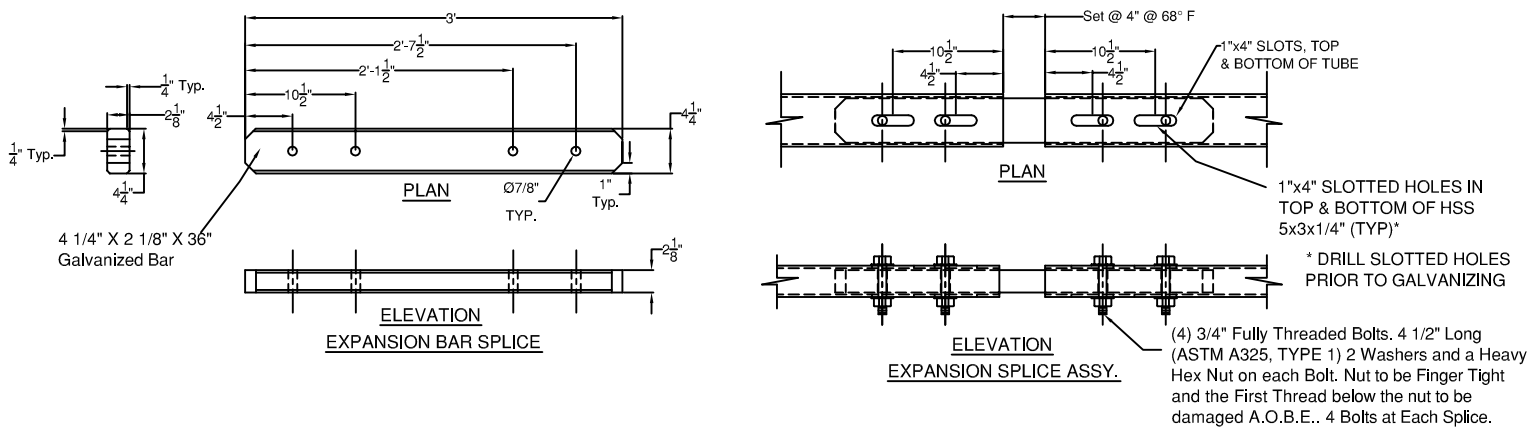

(ITEM # 9)

SPLICE TUBE - EXPANSION

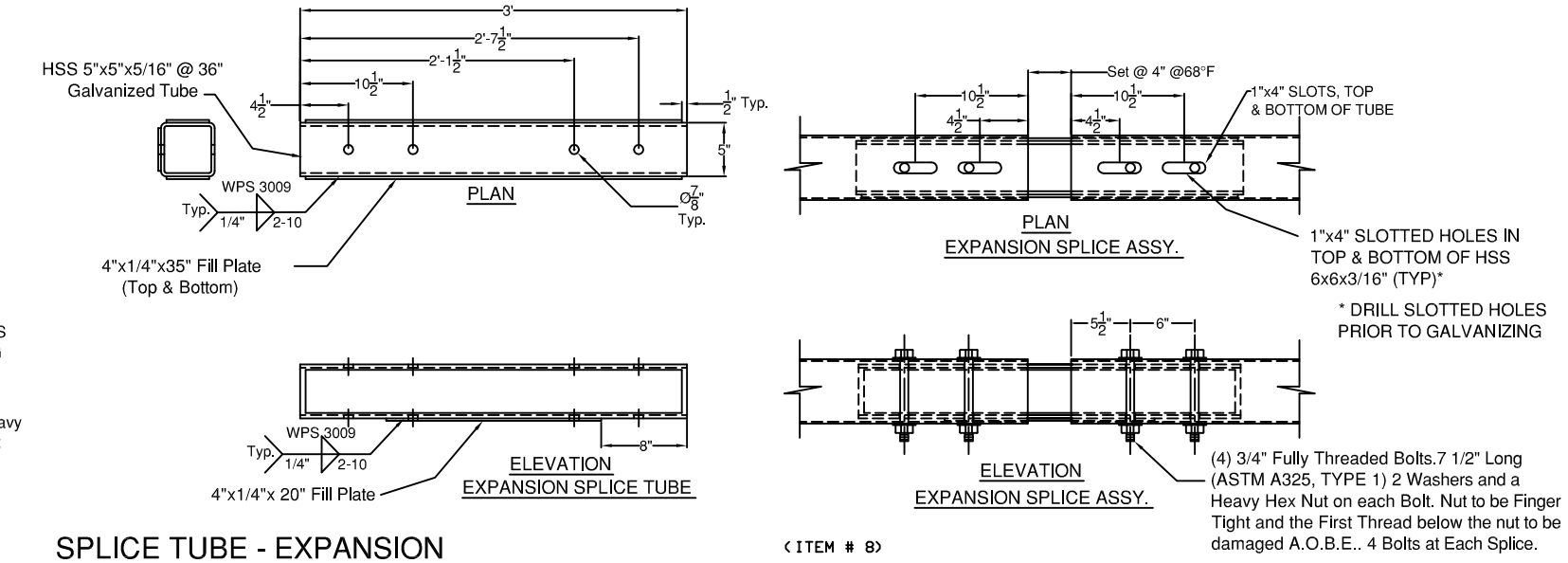

(ITEM # 8)

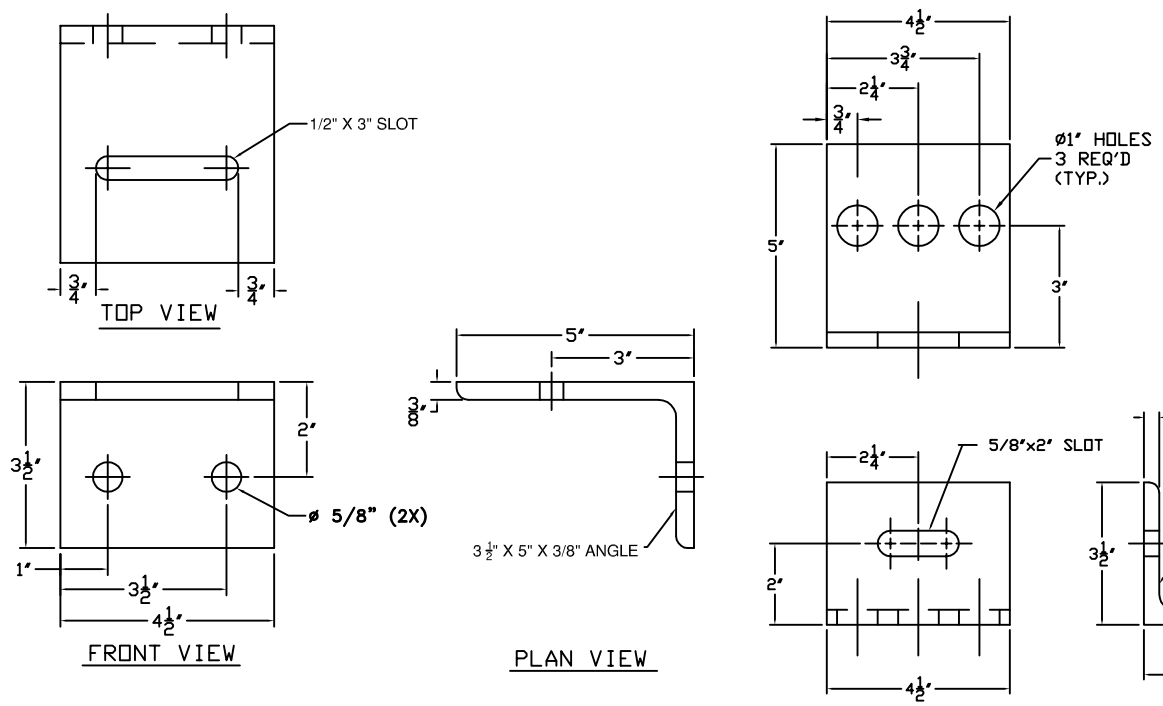

(ITEM # 10)

(ITEM # 11)

SPLICE TUBE - FIXED

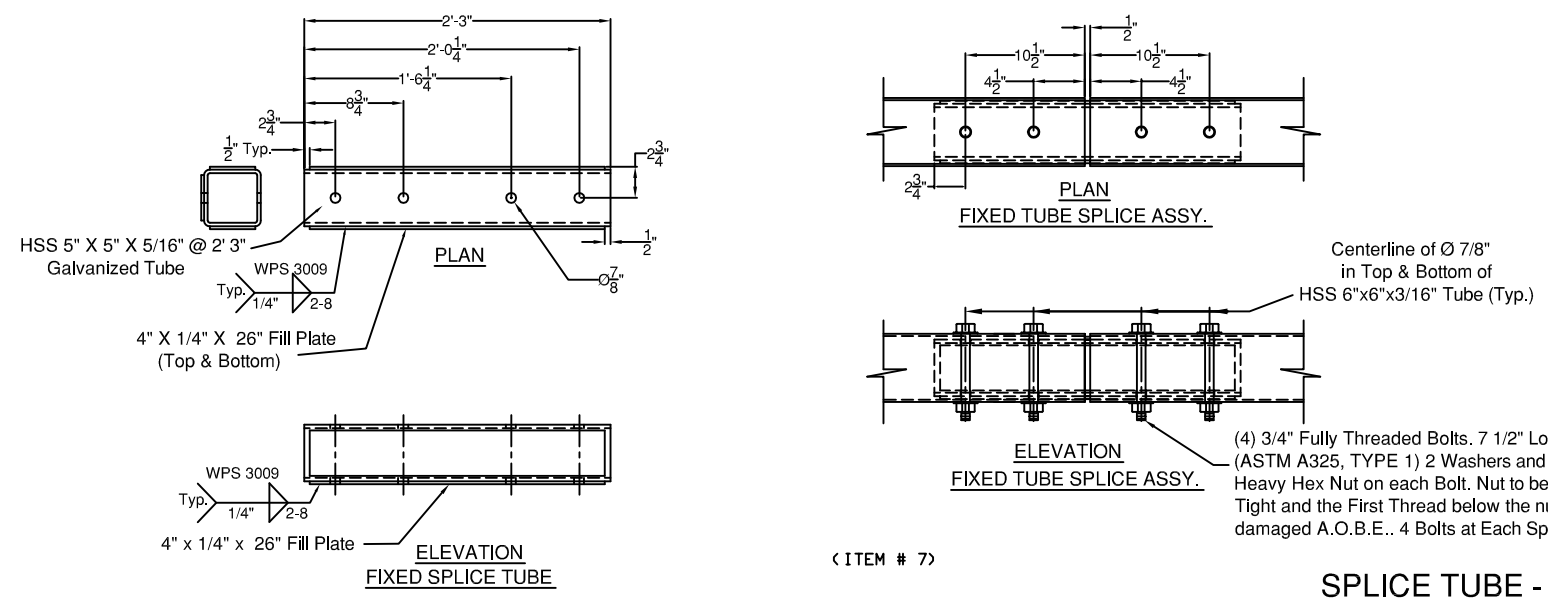

(ITEM # 7)

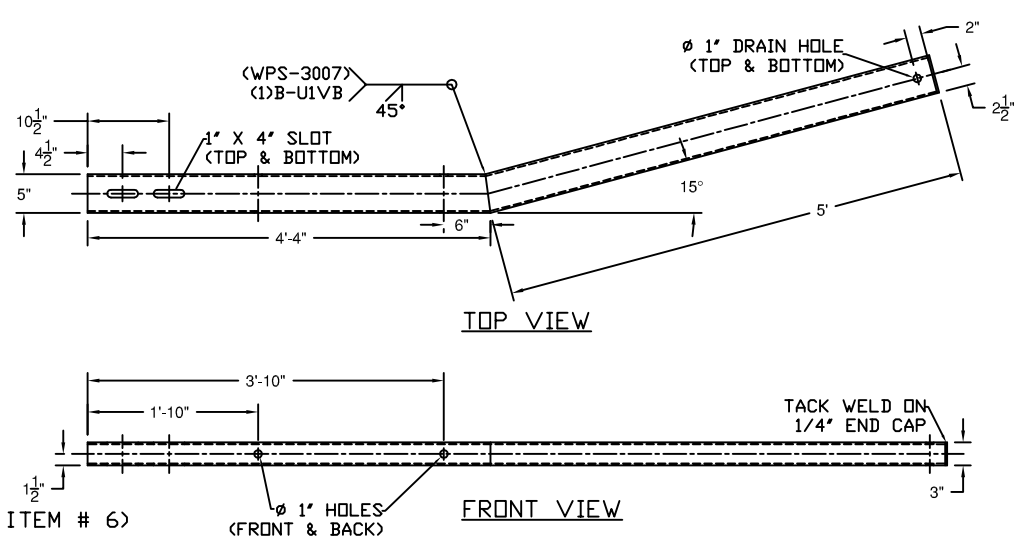

(ITEM # 6)

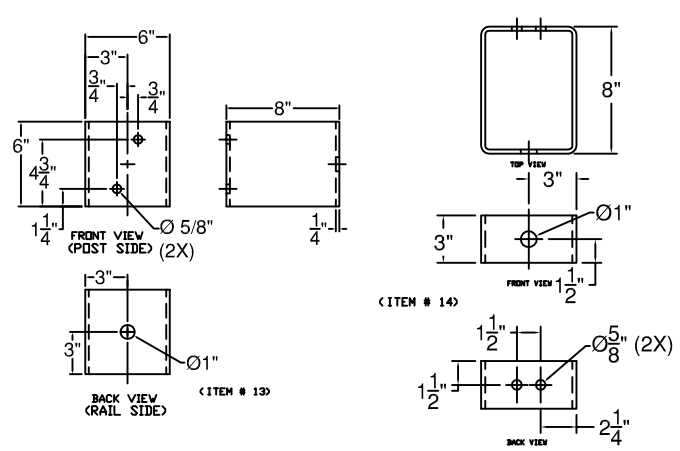

SPLICE TUBE - FIXED

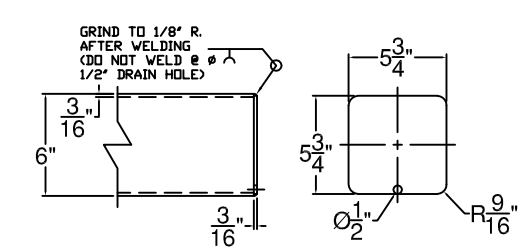

END COVER PLATE DETAIL

ITEM #: 621.725

F.R. LAFAYETTE, CAVENDISH

SHEET 4 OF 4

APPROVED BY:

GUARD RAIL TO BRIDGE RAIL TRANSITION DETAILS SHEET

CAVENDISH, ER BRF 0416 (13), ROUTE VT 131, OVER TWENTY MILE STREAM

VERMONT

REV	NO.	DATE	DESCRIPTION	BY	REV	NO.	DATE	DESCRIPTION	BY

ELDERLEE, INC.
OAKS CORNERS, NEW YORK 14518
E-Mail: dlong@elderlee.com
Tel: 315-789-6670 Fax: 315-789-6615

AISC CERTIFIED FABRICATOR

DRAWN	E.P.	11/13/13
CHECKED	D.L.	11/20/13
APPROVED	.	.
SCALE	SCHEMATIC	
DRAWING NO.	F.R. LAFAYETTE, CAVENDISH	