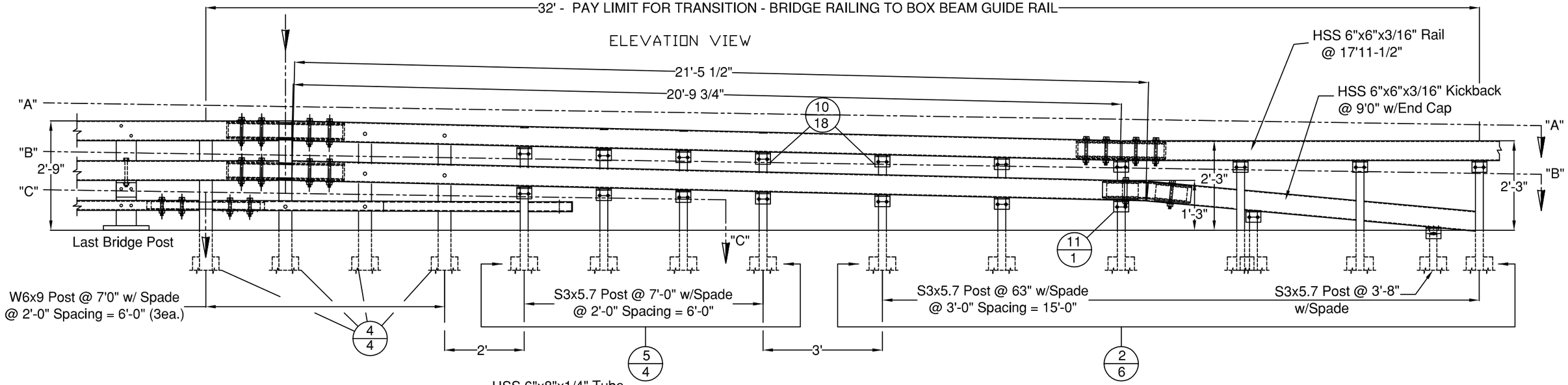

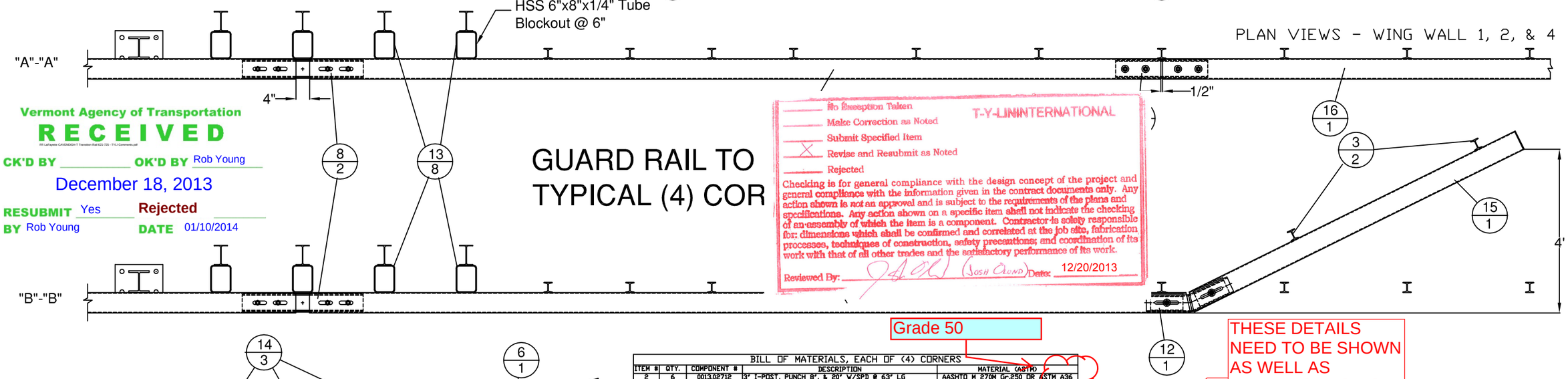

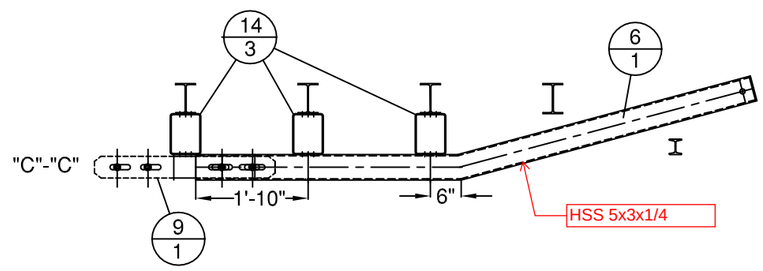

Vermont Agency of Transportation
RECEIVED
FR Lafayette CAVENDISH-T Transition Rail 625-725 - TYLI Comments.pdf
CK'D BY _____ OK'D BY Rob Young
December 18, 2013
RESUBMIT Yes Rejected
BY Rob Young DATE 01/10/2014

No Exception Taken
Make Correction as Noted
Submit Specified Item
X Revise and Resubmit as Noted
Rejected
T-Y-LIN INTERNATIONAL
Checking is for general compliance with the design concept of the project and general compliance with the information given in the contract documents only. Any action shown is not an approval and is subject to the requirements of the plans and specifications. Any action shown on a specific item shall not indicate the checking of an assembly of which the item is a component. Contractor is solely responsible for: dimensions which shall be confirmed and correlated at the job site, fabrication processes, techniques of construction, safety precautions; and coordination of its work with that of all other trades and the satisfactory performance of its work.
Reviewed By: (Josh Olund) Date: 12/20/2013

Grade 50

THESE DETAILS NEED TO BE SHOWN AS WELL AS IDENTIFICATION OF METHOD OF CURVING THE RAILS

BILL OF MATERIALS, EACH OF (4) CORNERS

ITEM #	QTY.	COMPONENT #	DESCRIPTION	MATERIAL (ASTM)
2	6	0013.02712	3' I-POST, PUNCH 8', & 20' W/SPD @ 63' LG	AASHTO M 270M Gr.250 OR ASTM A36
3	2	0013.57060	3' I-END POST W/SPD @ 3'-8" LG	AASHTO M 270M Gr.250 OR ASTM A36
4	4	0013.09001	W6X9 POST @ 7' W/SPD & 5/8" HOLES	AASHTO M 270M Gr.250 OR ASTM A36
5	4	0013.57010	3' I-POST, PUNCH 8' & 20', W/8X32' SPADE @7'	AASHTO M 270M Gr.250 OR ASTM A36
6	1	0033.80403	3X5' BTM TRANS RAIL W/5'-0' KB, EXP END	A500 Gr. B
7	1	0033.00640	HSS 5X5 TUBE SPLICE @27' LG W/ 1/4' SHIMS	A500 Gr. B / A572 Gr 50
8	2	0033.00730	HSS 5x5 EXP TUBE SPLICE @ 36' LG W/ 1/4' SHIMS	A500 Gr. B / A572 Gr 50
9	1	0033.00930	BR EXP BAR SPLICE 2-1/8" X 4-1/4" @ 36" LG	AASHTO M 270M Gr.250 OR ASTM A36
10	18	0054.00050	REG BB SHELF ANGLES @ 4-1/2"	AASHTO M 270M Gr.250 OR ASTM A36
11	1	0054.00052	DWV BB SHELF ANGLES @ 4-1/2"	AASHTO M 270M Gr.250 OR ASTM A36
12	1	0054.00074	HSS 5X5 DBL BEND TUBE SPL @ 27' LG	A500 Gr. B / A572 Gr 50
13	8	0054.00563	6X8' TRANS. TUBE B/O @ 6' LG	A500 Gr. B
14	3	0054.00565	6X8' TRANS. TUBE B/O @ 3' LG	A500 Gr. B
15	1	0054.09000	6X6' BB @ 9'-0' KICKBACK, W/ CAP	A500 Gr. B / A36
16*	0.5	0054.18000	6X6' BB @ 17'-11 1/2', DRILL 3' CC	A500 Gr. B
17	1	0054.90092	6X6' BB TOP TRANS @ 20'-9 5/8' LG W/EXP END	A500 Gr. B
18	1	0054.90093	6X6' BB BTM TRANS @ 21'-4 5/8' LG W/EXP END	A500 Gr. B
19	17	0080.03355	3/8' X 7 1/2' BOLT, NUT, & 2 FW	A307, A563, F436
20	19	0080.04100	1/2' x 1-1/2' BOLT, NUT, & FW	A307, A563, F436
21	22	0080.04120	1/2' x 1-1/2' BOLT, NUT, 2 FW & LW	A307, A563, F436
22	4	0080.06255	3/4' X 4-1/2' BOLT, NUT, 2 FW	A325, A563, F436
23	12	0080.06340	3/4' X 7-1/2' BOLT, NUT, 2 FW	A325, A563, F436
24	6	0080.06370	3/4' X 8' CARR BOLT, NUT, FW & LW	A307, A563, F436
25	2	0080.08400	3/4' X 8' BOLT, NUT, 2 FW, & LW	A325, A563, F436

* - @ SOUTH WEST CORNER (WW1) USE 14'-11 1/2' LENGTH W/ 20' RADIUS,
* - @ SOUTH EAST CORNER (WW2) USE 14'-11 1/2' LENGTH W/ 15' RADIUS.

HARDWARE NOTES

ITEM #	FUNCTION
19	BOLT RAIL TO SHELF ANGLE (ITEM #10)
20	BOLT SHELF ANGLE (ITEM #'S 10 & 11) TO POST
21	BOLT BLOCK-OUTS (ITEM #'S 13 & 14) TO HEAVY POST
22	(4) PER SPLICE BAR (ITEM #9)
23	(4) PER SPLICE TUBING (ITEM #'S 7 & 8)
24	BOLT RAIL (ITEMS #'S 6,17, & 18 TO BLOCK-OUTS (ITEM #'S 13 & 14) [WHERE FASTENED]
25	BOLT DOUBLE BEND SPLICE TUBE (ITEM #12) TO RAIL (ITEM #18) & KICKBACK (ITEM #15) & ITEM #11)

ITEM #: 621.725

APPROVED BY:

F.R. LAFAYETTE, CAVENDISH

SHEET 1 OF 4

GUARD RAIL TO BRIDGE RAIL TRANSITION DETAILS SHEET

CAVENDISH, ER BRF 0416 (13), ROUTE VT 131, OVER TWENTY MILE STREAM
VERMONT

REV	NO.	DATE	DESCRIPTION	BY	REV	NO.	DATE	DESCRIPTION	BY

ELDERLEE, INC.
OAKS CORNERS, NEW YORK 14518
E-Mail: dlong@elderlee.com
Tel: 315-789-6670 Fax: 315-789-6615

AASHTO AASHTO CERTIFIED FABRICATOR

DRAWN	E.P.	11/13/13
CHECKED	D.L.	11/20/13
APPROVED	.	.
SCALE	SCHEMATIC	
DRAWING NO.	F.R. LAFAYETTE, CAVENDISH	

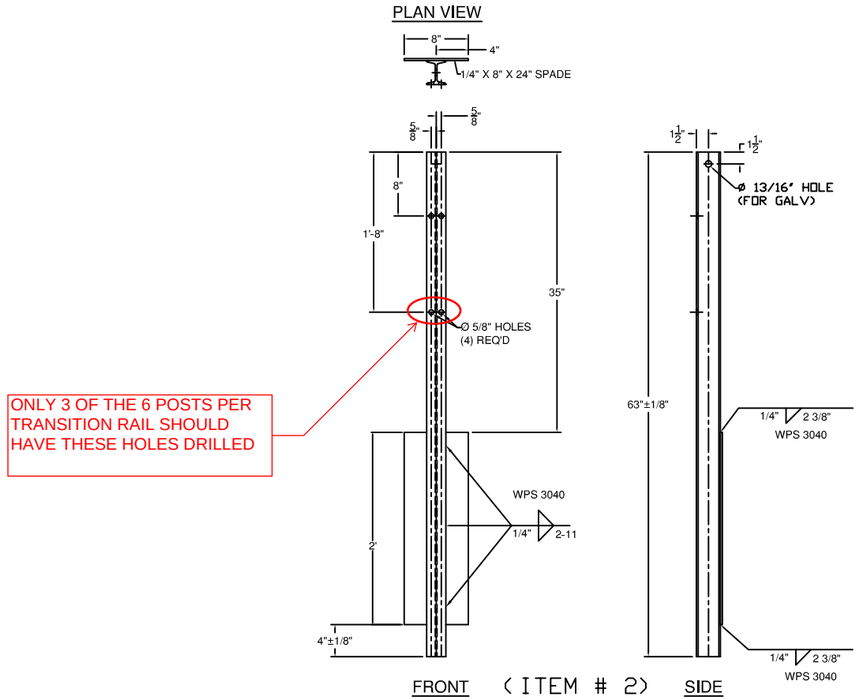

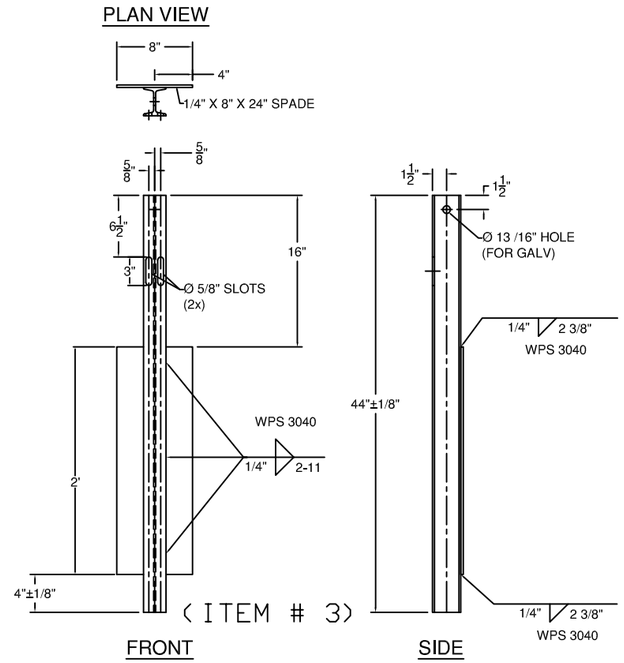

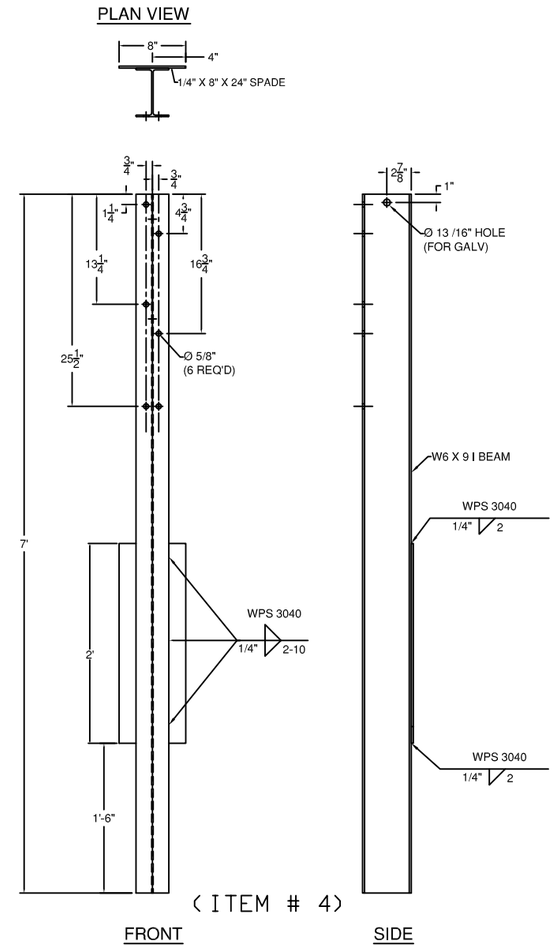

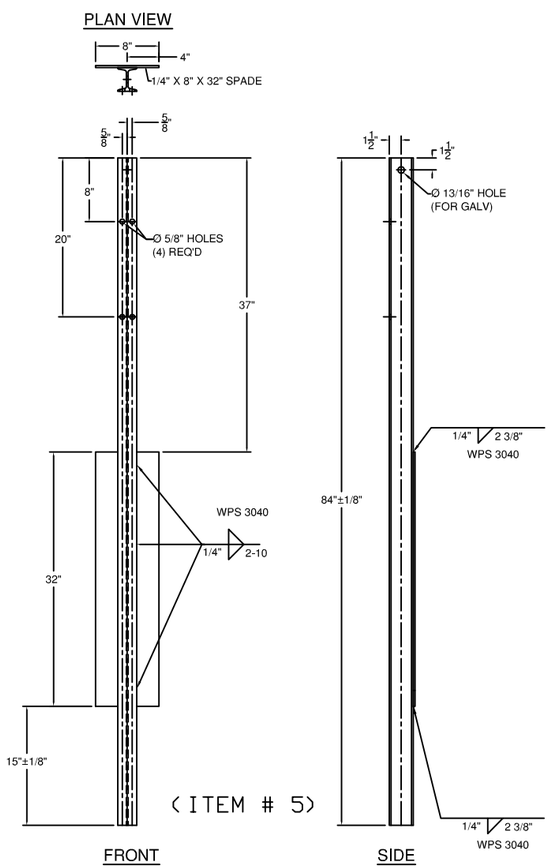

ITEM #: 621.725

F.R. LAFAYETTE, CAVENDISH

SHEET 2 OF 4

APPROVED BY:

GUARD RAIL TO BRIDGE RAIL TRANSITION DETAILS SHEET

CAVENDISH, ER BRF 0416 (13), ROUTE VT 131, OVER TWENTY MILE STREAM

VERMONT

REV	NO.	DATE	DESCRIPTION	BY	REV	NO.	DATE	DESCRIPTION	BY

ELDERLEE, INC.
OAKS CORNERS, NEW YORK 14518
E-Mail: dlong@elderlee.com
Tel: 315-789-6670 Fax: 315-789-6615

AISC CERTIFIED FABRICATOR

DRAWN	E.P.	11/13/13
CHECKED	D.L.	11/20/13
APPROVED	.	.
SCALE	SCHEMATIC	
DRAWING NO.	F.R. LAFAYETTE, CAVENDISH	

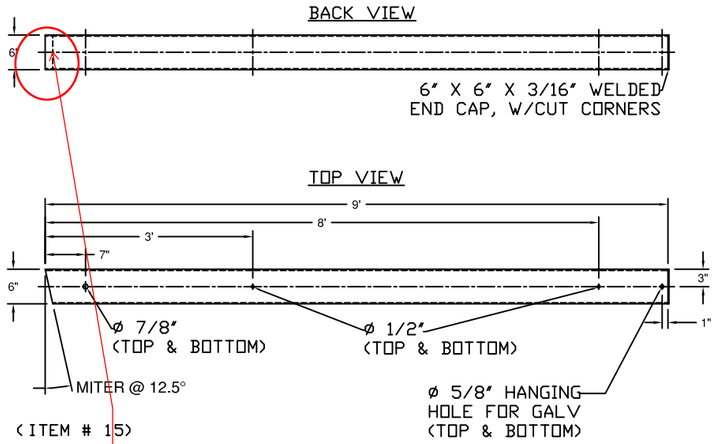

THIS END NEEDS TO ALSO BE MITERED THE OTHER DIRECTION TO ACCOUNT FOR THE ELEVATION DROP IN THE RAILING (DIMENSION "B" IN THE LOWER RIGHT DETAIL). THE ACTIUAL DROP WILL DEPEND ON SIDESLOPE GRADING.

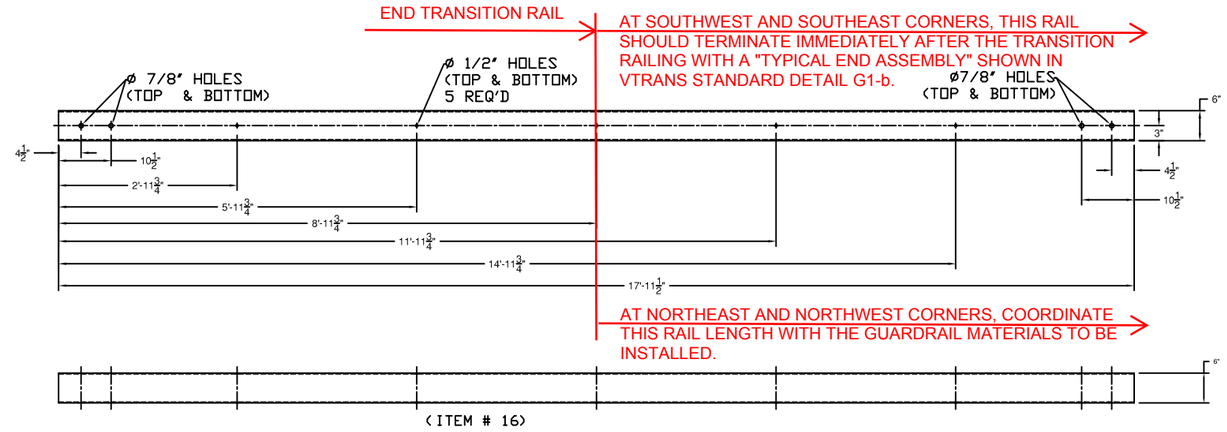

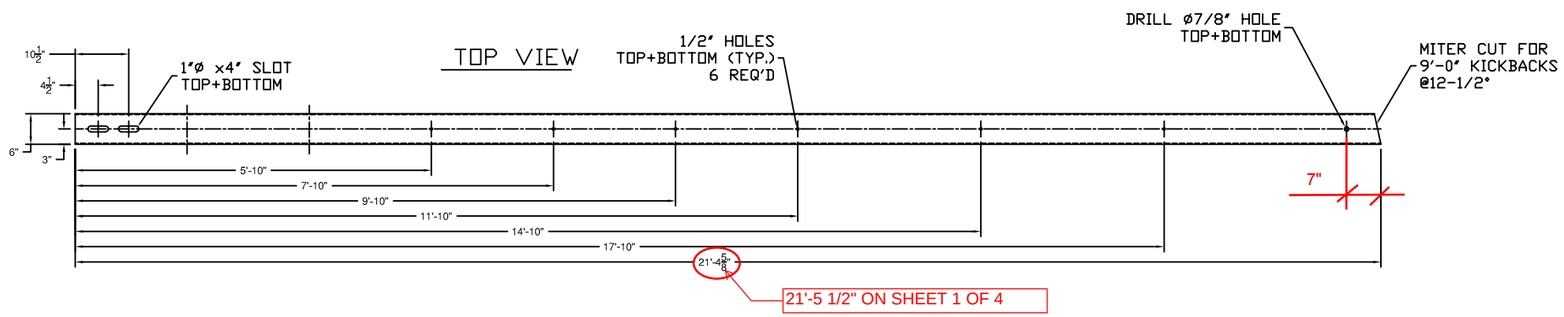

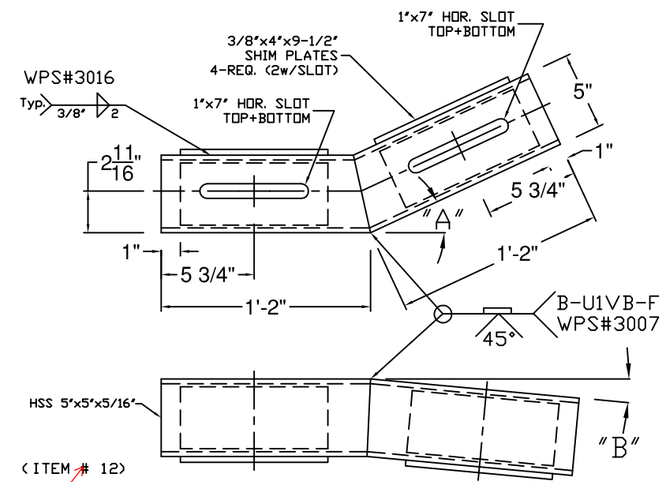

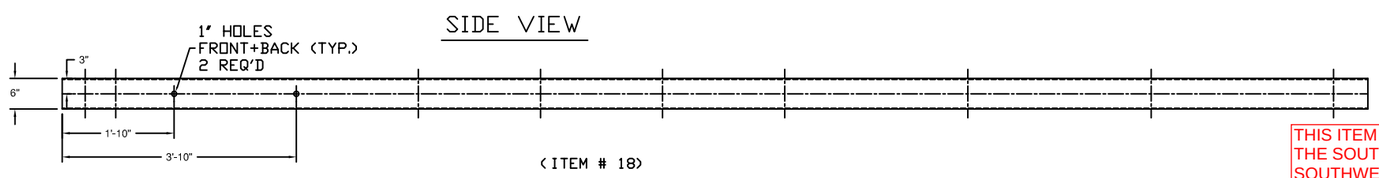

THIS ITEM IS IN A CURVE AT THE SOUTHEAST AND SOUTHWEST CORNERS - ADDITIONAL DETAILS MAY BE NEEDED FOR FIT UP, DEPENDING ON DETAILS OF CURVING PRIMARY RAIL ELEMENTS

IDENTIFY A VALUE FOR EACH OF THE 4 LOCATIONS

"A" - SEE PLAN FOR TURN BACK DISTANCE, SET ANGLE ACCORDINGLY.
"B" - TURN DOWN ANGLE SET BY THE 9" MEASURMENT AT THE END OF THE BOX BEAM.

GENERAL NOTES:

1) ALL RAILING IS TO BE FABRICATED AND ERECTED ACCORDING TO SECTION 525 OF THE STANDARD SPECIFICATIONS.
2) BOLTS SHALL BE TORQUED SNUG TIGHT (APPROXIMATELY 100 FT-LB).
3) PROTRUSIONS CAUSED BY WELDING OR GALVANIZING ARE NOT PERMITTED ON THE ADJOINING SURFACES OF THE BOX BEAM RAILS, SPLICE TUBES AND FILL PLATES.
4) BOX BEAM TUBE AND STEEL POST MATERIALS, DIMENSION SIZES AND NOTES SHALL BE THE SAME AS THOSE OF THE BRIDGE RAIL, UNLESS OTHERWISE NOTED.

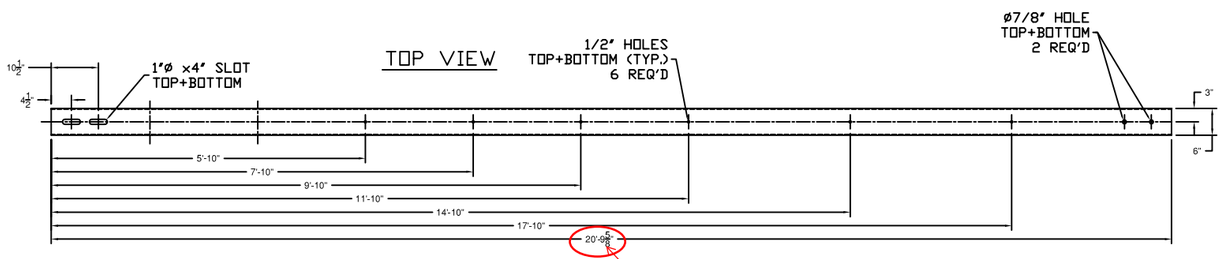

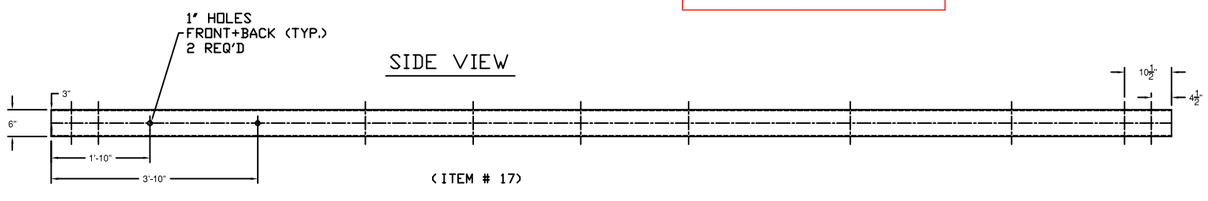

ITEM #: 621.725

F.R. LAFAYETTE, CAVENDISH

SHEET 3 OF 4

APPROVED BY:

GUARD RAIL TO BRIDGE RAIL TRANSITION DETAILS SHEET

CAVENDISH, ER BRF 0416 (13), ROUTE VT 131, OVER TWENTY MILE STREAM
VERMONT

REV	NO.	DATE	DESCRIPTION	BY	REV	NO.	DATE	DESCRIPTION	BY

ELDERLEE, INC.
OAKS CORNERS, NEW YORK 14518
E-Mail: dlong@elderlee.com
Tel: 315-789-6670 Fax: 315-789-6615

AISC CERTIFIED FABRICATOR

DRAWN	E.P.	11/13/13
CHECKED	D.L.	11/20/13
APPROVED	.	.
SCALE	SCHEMATIC	
DRAWING NO.	F.R. LAFAYETTE, CAVENDISH	

SPLICE BAR - EXPANSION

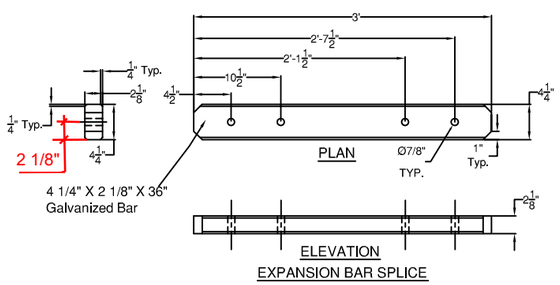

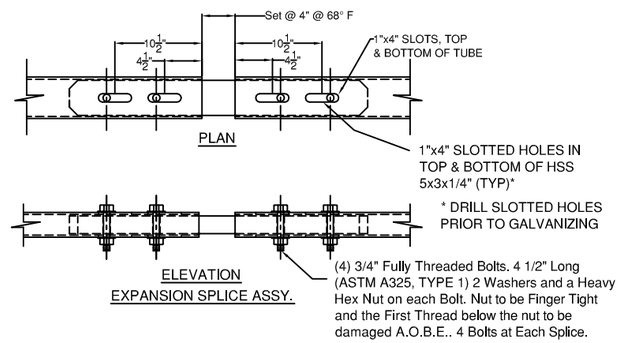

(ITEM # 9)

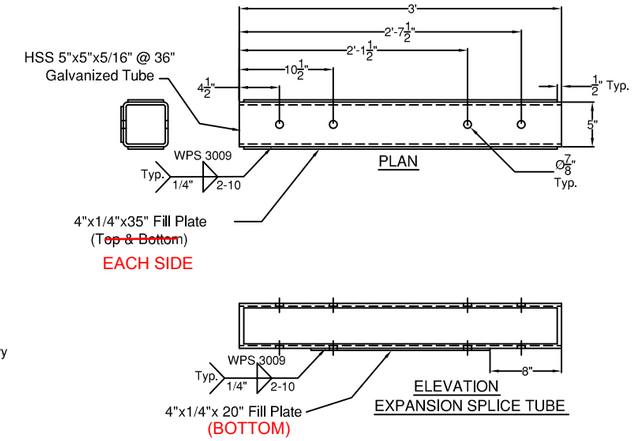

SPLICE TUBE - EXPANSION

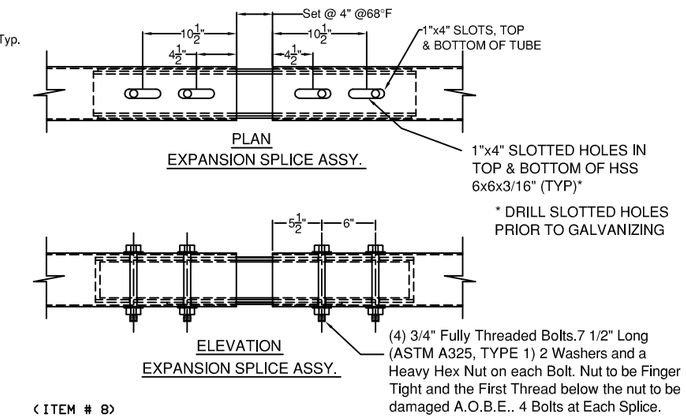

(ITEM # 8)

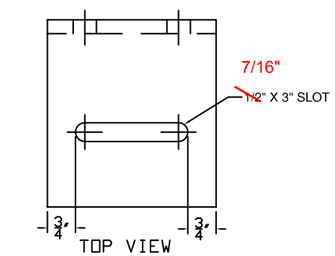

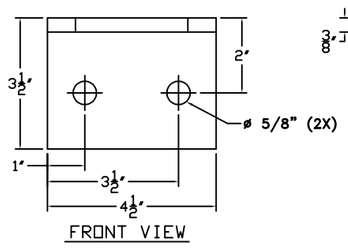

(ITEM # 10)

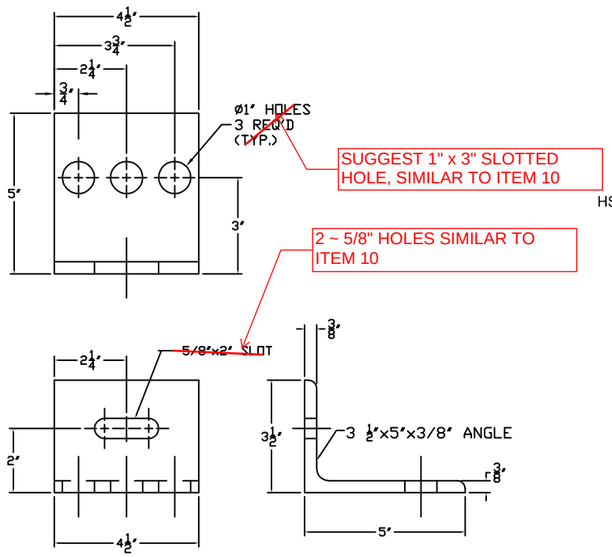

(ITEM # 11)

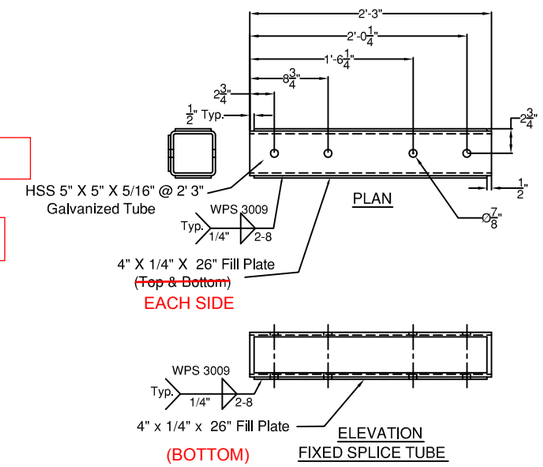

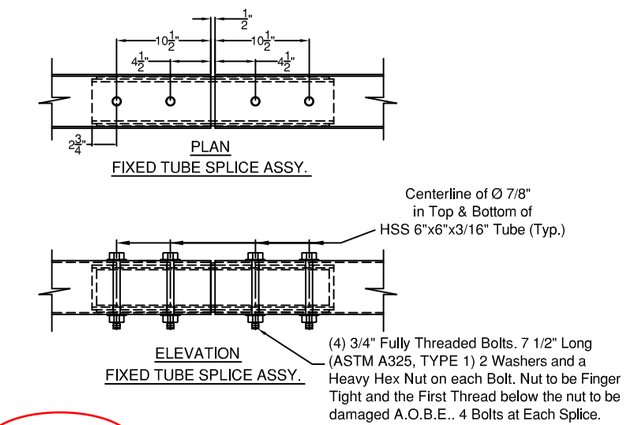

SPLICE TUBE - FIXED

(ITEM # 7)

THIS ITEM IS IN A CURVE AT THE SOUTHEAST AND SOUTHWEST CORNERS - ADDITIONAL DETAILS MAY BE NEEDED FOR FIT UP, DEPENDING ON DETAILS OF CURVING PRIMARY RAIL ELEMENTS

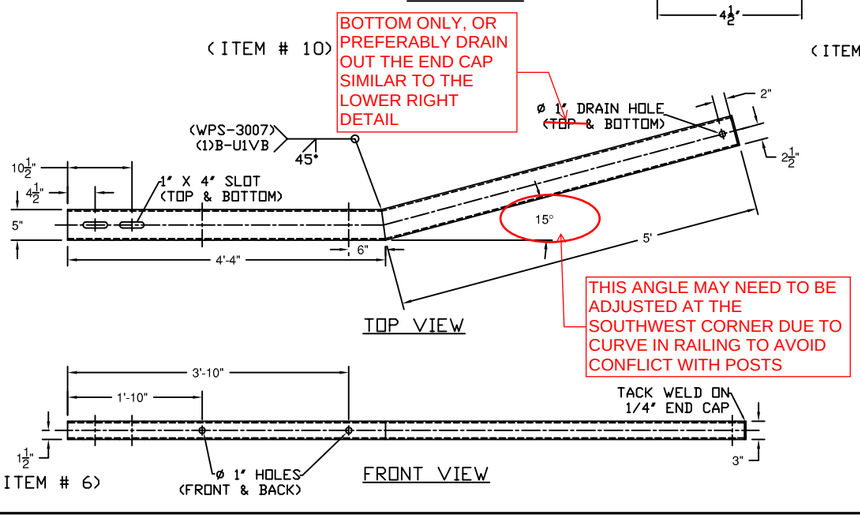

(ITEM # 6)

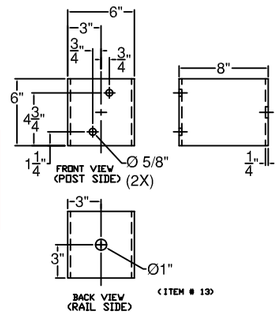

(ITEM # 13)

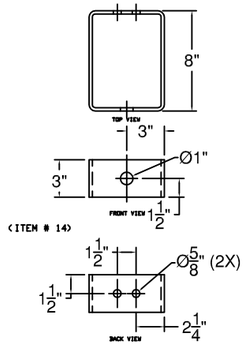

(ITEM # 14)

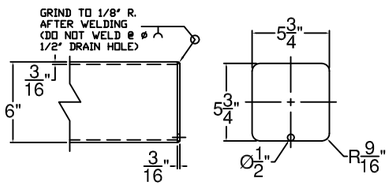

END COVER PLATE DETAIL

ITEM #: 621.725

F.R. LAFAYETTE, CAVENDISH

SHEET 4 OF 4

APPROVED BY:

GUARD RAIL TO BRIDGE RAIL TRANSITION DETAILS SHEET

CAVENDISH, ER BRF 0416 (13), ROUTE VT 131, OVER TWENTY MILE STREAM

VERMONT

REV	NO.	DATE	DESCRIPTION	BY	REV	NO.	DATE	DESCRIPTION	BY

ELDERLEE, INC.
OAKS CORNERS, NEW YORK 14518
E-Mail: dlong@elderlee.com
Tel: 315-789-6670 Fax: 315-789-6615

AISC CERTIFIED FABRICATOR

DRAWN	E.P.	11/13/13
CHECKED	D.L.	11/20/13
APPROVED	.	.
SCALE	SCHEMATIC	
DRAWING NO.	F.R. LAFAYETTE, CAVENDISH	