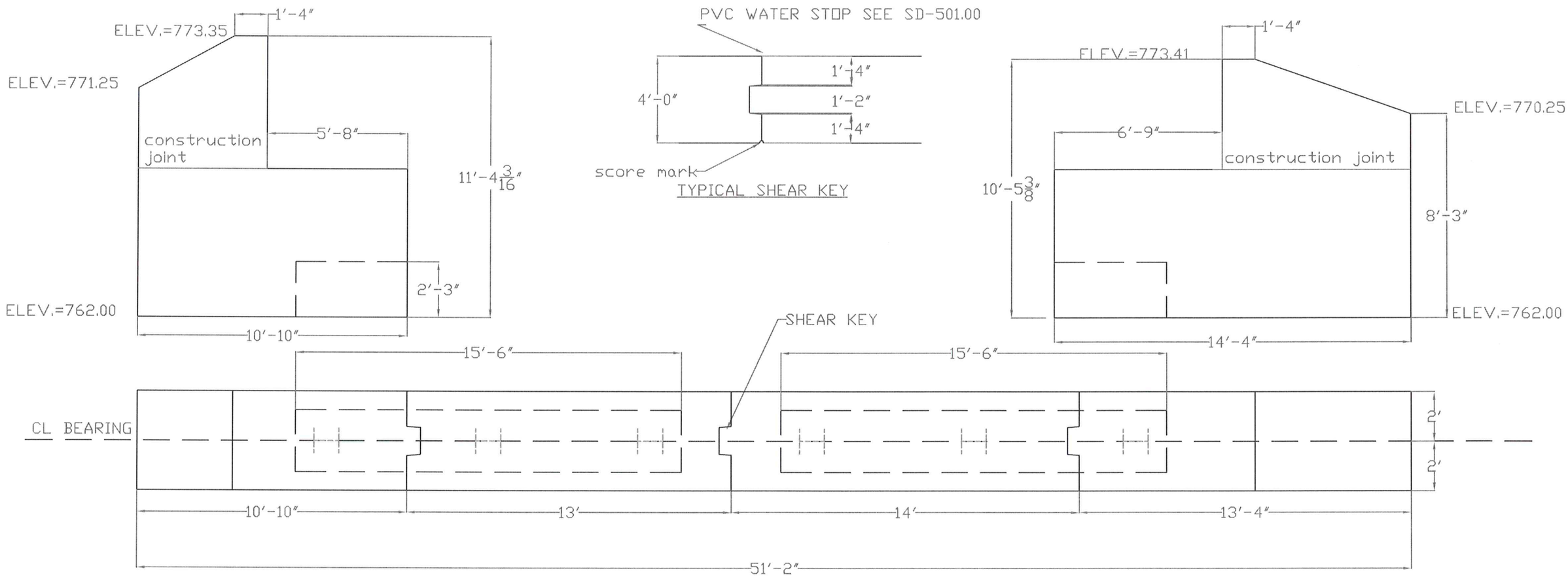

ABUTMENT 1 PLAN&ELEV VIEW

COLD RIVER BRIDGES, LLC
10 LANBRO LANE
TEL 603-756-9300 WALPOLE, NH FAX 603-756-9303

CAVENDISH ER BRF 0146(13)

ABUTMENT 1 PLAN

SHEET NUMBER 1

DATE: 10-2-13 scale: 1/4"=1'

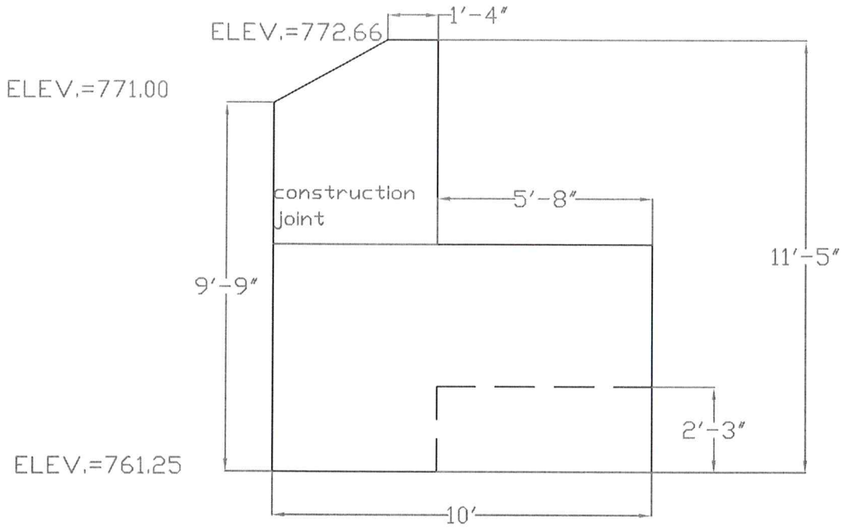

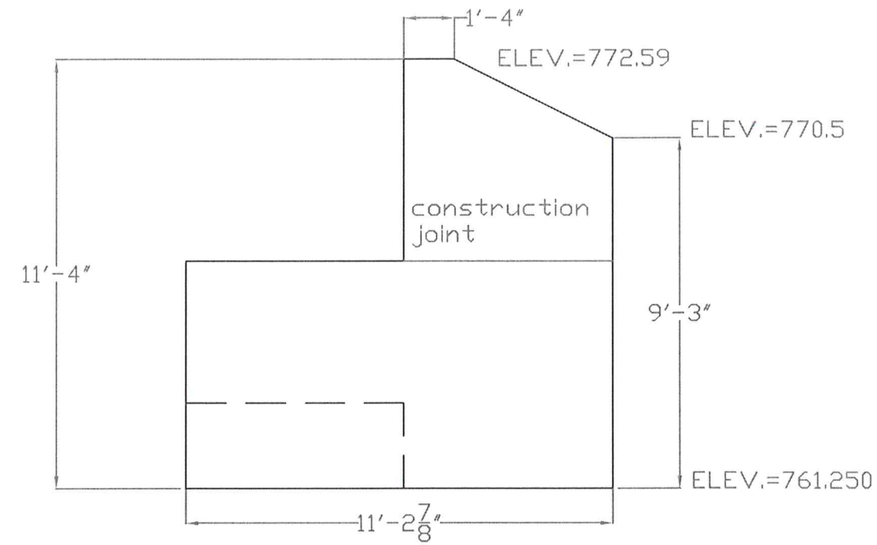

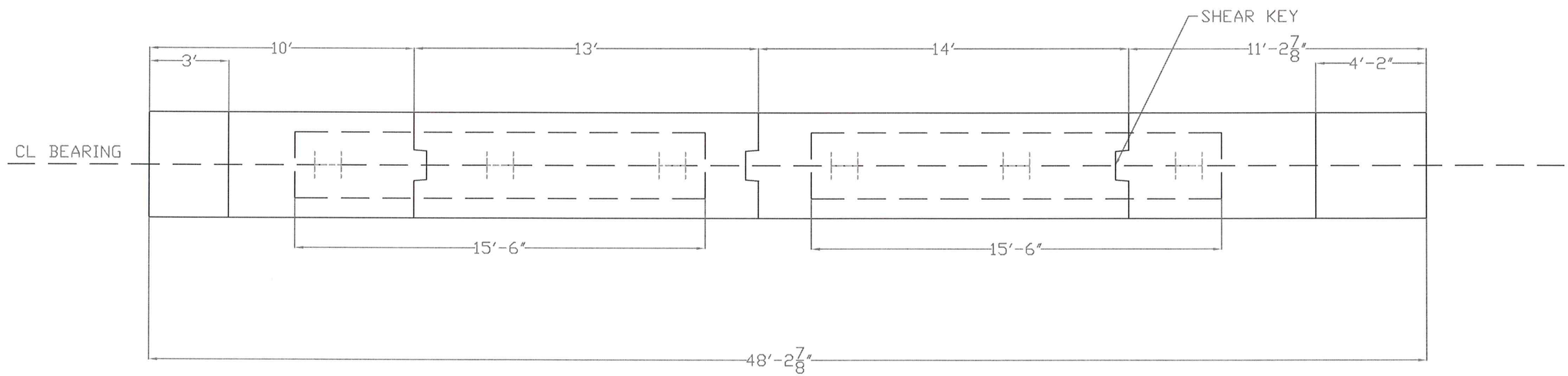

ABUTMENT 2 PLAN&ELEV VIEW

COLD RIVER BRIDGES, LLC
10 LANBRO LANE
TEL 603-756-9300 WALPOLE, NH FAX 603-756-9303

CAVENDISH ER BRF 0146(13)

ABUTMENT 2 PLAN

SHEET NUMBER 2

DATE: 10-2-13 SCALE: 1/4"=1'

NOTE:
USE MECHANICAL CONNECTORS IN WING WALLS AND FF AND
BF OF ABUTMENT R-BAR

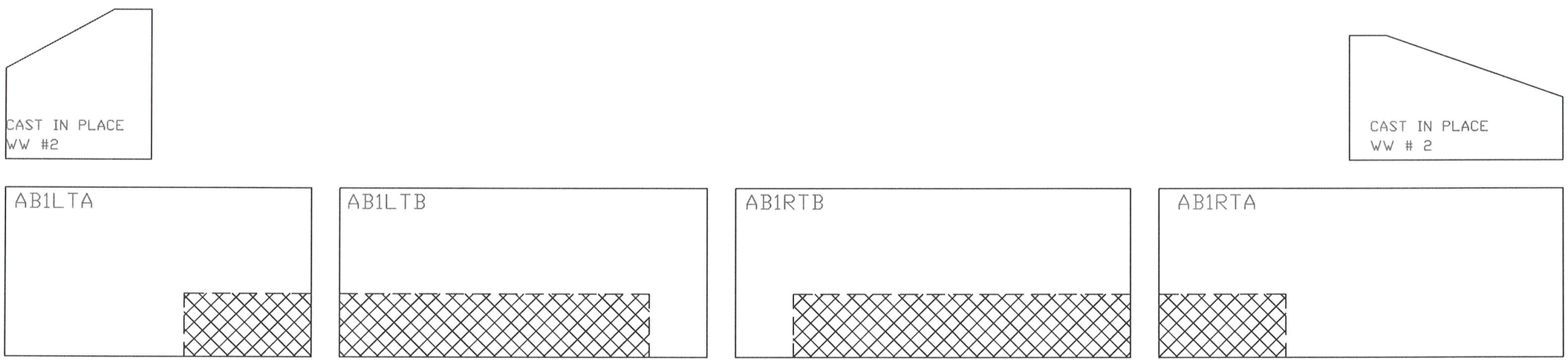

ABUTMENT 1 ELEVATION VIEW

COLD RIVER BRIDGES, LLC
10 LANBRO LANE
TEL 603-756-9300 WALPOLE, NH FAX 603-756-9303

CAVENDISH ER BRF 0146(13)

ABUTMENT 1 PLAN

SHEET NUMBER
3

DATE: 10-2-13 scale:

NOTE:
USE MECHANICAL CONNECTORS IN WING WALLS AND FF AND
BF OF ABUTMENT R-BAR

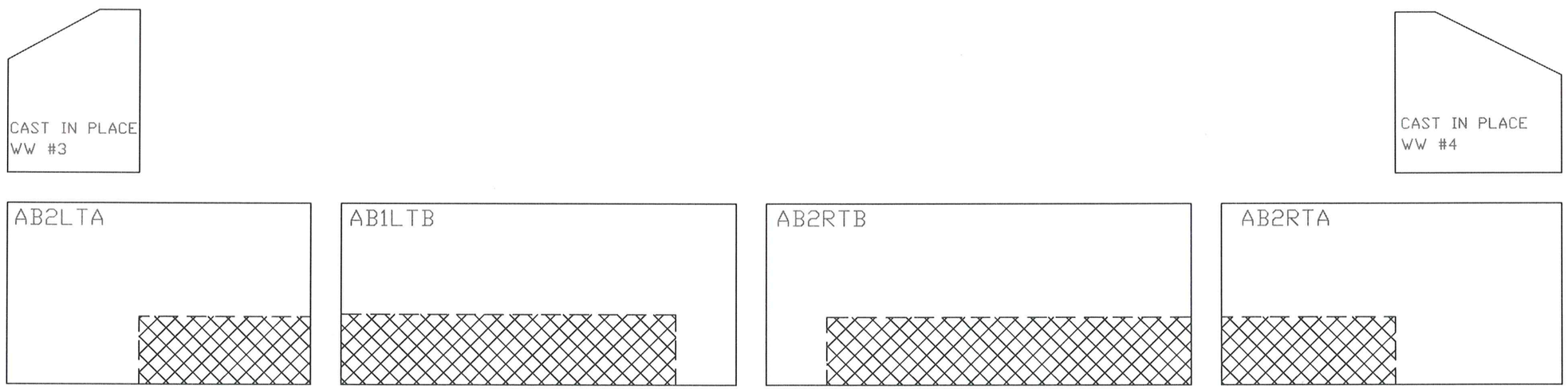

ABUTMENT 2 ELEVATION VIEW

COLD RIVER BRIDGES, LLC
10 LANBRO LANE
TEL 603-756-9300 WALPOLE, NH FAX 603-756-9303

CAVENDISH ER BRF 0146(13)

ABUTMENT 2 PLAN

SHEET NUMBER
4

DATE: 10-2-13 scale: