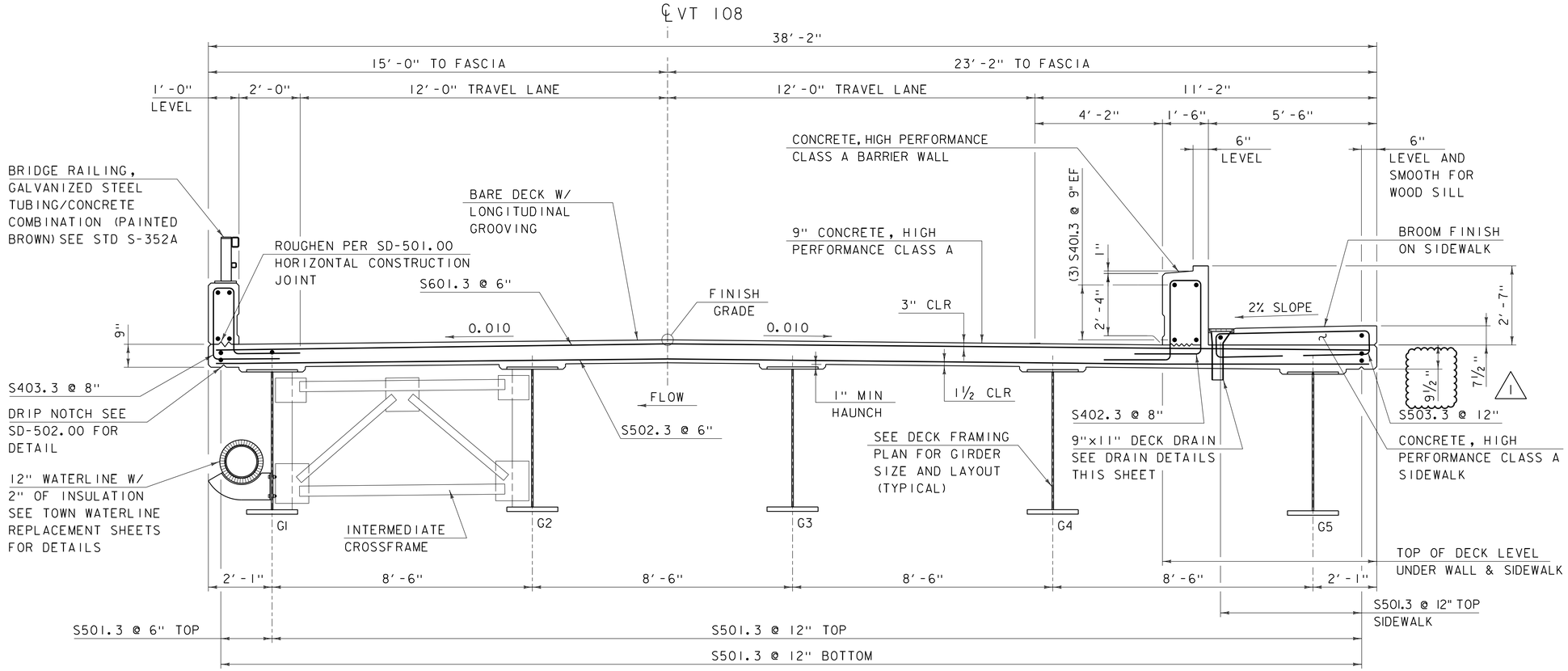

BRIDGE DECK TYPICAL

SCALE ½" = 1'-0"

NOTES:

1.) DECK DRAIN AND DOWNSPOUT PAYMENT METHOD SHALL BE INCIDENTAL TO CONCRETE, HIGH PERFORMANCE CLASS A

2.) PROVIDE DECK DRAIN, HEAVY DUTY, NEENAH STYLE, R-4015-BI OR EQUIVALENT, WITH TYPE "P" GRATE OR EQUIVALENT.

3.) GRATE AND DECK DRAIN SHALL BE HOT-DIP GALVANIZED.

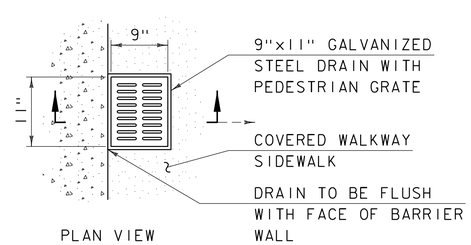

PLAN VIEW

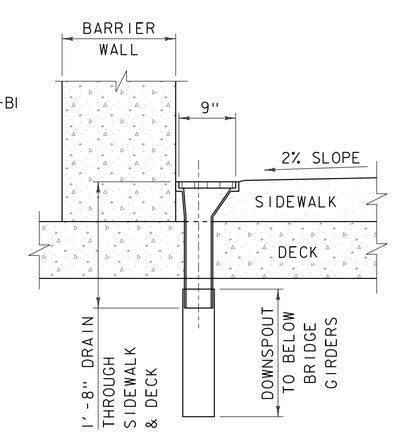

SECTION VIEW

DRAIN DETAILS

SCALE 1" = 1'-0"

NOTE:

NF = NEAR FACE
FF = FAR FACE
EF = EACH FACE
▲ = CUT TO FIT IN FIELD
3" CLEAR, UNLESS OTHERWISE SPECIFIED ON THE PLANS.
2'-2" BAR LAP UNLESS OTHERWISE SPECIFIED ON THE PLANS.

REVISION	DATE	DESCIPTION	BY
1	3-05-2015	NOTED DECK DEPTH FASCIA SIDE	MCL

PROJECT NAME: STOWE
PROJECT NUMBER: BRF 0235 (11)

FILE NAME: s87e052sup.dgn
PROJECT LEADER: C. CARLSON
DESIGNED BY: D. PETERSON
DECK TYPICAL & DETAILS

PLOT DATE: 10-MAR-2015
DRAWN BY: M. LONGSTREET
CHECKED BY: J. LACROIX
SHEET 28 OF 64

133'-7½" BEGIN DECK TO END DECK

(199) S403.3 @ 8"

38'-2" FASCIA TO FASCIA

15'-0"

23'-2"

(37) S801.3 @ 12" TOP ALT W/ S501.3

(38) S504.3 @ 12"

℄ BEARING #1
STA 3+48.00

75°

BEGIN
PROJECT/BRIDGE
STA 3+47.22

STATIONING
VT 108

105°

END BRIDGE/PROJECT
STA 4+78.78

℄ BEARING #2
STA 4+78.00

(4) S501.3 @ 6" - TOP

(6) S501.3 @ 12" - TOP SIDWALK

(38) S504.3 @ 12"

(37) S801.3 @ 12" TOP ALT W/ S501.3

(36) S501.3 @ 12" - TOP ALT W/ S801.3

(38) S501.3 @ 12" - BOTTOM

1

12'-0"

9"x11" SIDEWALK
DECK DRAIN

BARRIER WALL

EXTEND S801.3 32'-0" INTO DECK (TYP)

(199) S402.3 @ 8"

(134) S503.3 @ 12"

(263) S601.3 @ 6" - TOP

(263) S502.3 @ 6 - BOTTOM

NOTE:

NF = NEAR FACE
FF = FAR FACE
EF = EACH FACE
▲ = CUT TO FIT IN FIELD
3" CLEAR, UNLESS OTHERWISE SPECIFIED ON THE PLANS.
2'-2" BAR LAP UNLESS OTHERWISE SPECIFIED ON THE PLANS.

DECK REINFORCING PLAN

SCALE: ¼" = 1'-0"

REVISION	DATE	DESCIPTION	BY
1	3-04-2015	CHANGE SIDEWALK DECK DRAIN LOCATION	MCL

PROJECT NAME: STOWE
PROJECT NUMBER: BRF 0235 (11)

FILE NAME: s87e052sup.dgn
PROJECT LEADER: C. CARLSON
DESIGNED BY: D. PETERSON
DECK REINFORCING PLAN

PLOT DATE: 04-MAR-2015
DRAWN BY: D. KARABEGOVIC
CHECKED BY: M. LONGSTREET
SHEET 29 OF 64

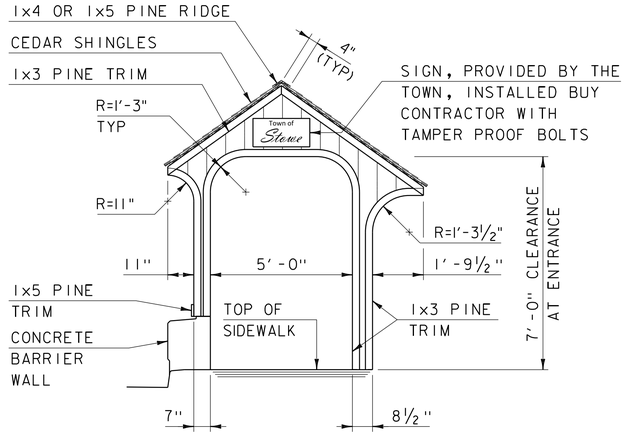

ELEVATION A-A

SCALE: ⅜" = 1'-0"

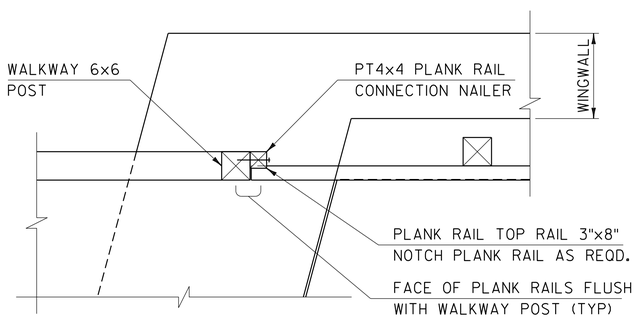

PLANK RAIL PLAN DETAIL

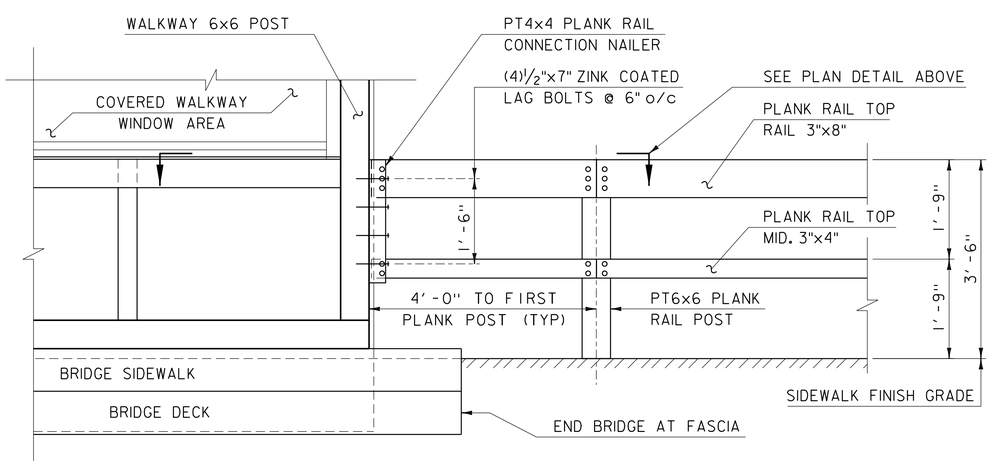

PLANK RAIL CONNECTION DETAIL

SCALE: ¾" = 1'-0"

1) PLANK RAIL WILL BE PAID FOR UNDER CONTRACT ITEM 621.15.

2) THE PT4x4 AND (4) ½"x7" LAG BOLTS WILL BE INCLUDED IN THE COVERED WALKWAY SPECIAL PROVISION ITEM.

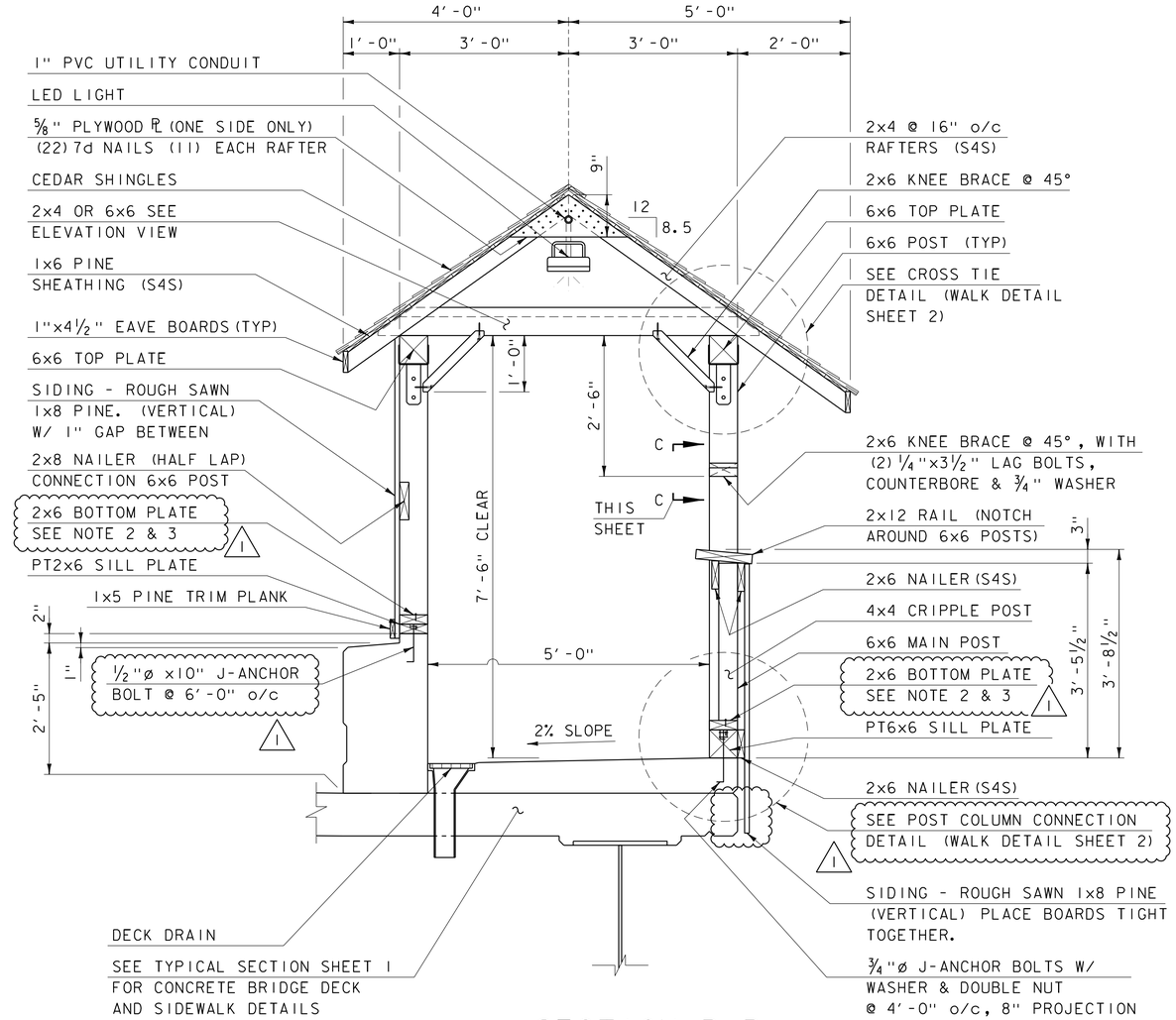

SECTION B-B

SCALE: ¾" = 1'-0"

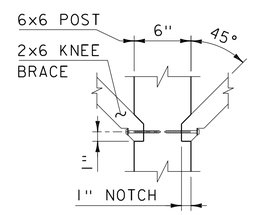

SECTION C-C

SCALE: 1½" = 1'-0"

1) SEE WALK FRAMING PLAN & ELEVATIONS SHEET FOR ADDITIONAL NOTES AND CONNECTIONS REQUIREMENTS.

2) ATTACH 2x6 BOTTOM PLATE TO PT2x6 AND PT6x6 SILL PLATE(S) WITH (2) 3" LONG STRUCTURAL WOOD SCREWS AT 16" o/c (TYP)

3) COLUMN TO SILL PLATE ANGLE CONNECTOR SHALL BE STRONG-TIE DOUBLE STUD PLATE (DSP), 18-GUAGE, HOT- DIP GALVANIZED (PER ASTM A653), OR EQUIVALENT CONNECTOR. USE FASTENERS PER MFR RECOMENDATIONS. SEE "POST COLUMN CONNECTION DETAIL" ON "WALK DETAIL SHEET 2" FOR LOCATIONS AND DETAILS.

REVISION	DATE	DESCIPTION	BY
1	02-20-2015	USE DOUBLE SILL BOTTOM PLATE ADD SILL CONNECTORS PLATE	MCL

NOTE: DIMENSION IN INCHES UNLESS OTHERWISE NOTED.

PROJECT NAME: STOWE
PROJECT NUMBER: BRF 0235 (11)

FILE NAME: s87e052walk.dgn
PROJECT LEADER: C. CARLSON
DESIGNED BY: D. PETERSON
WALK DETAIL SHEET 1
PLOT DATE: 04-MAR-2015
DRAWN BY: M. LONGSTREET
CHECKED BY: J. LACROIX
SHEET 34 OF 64

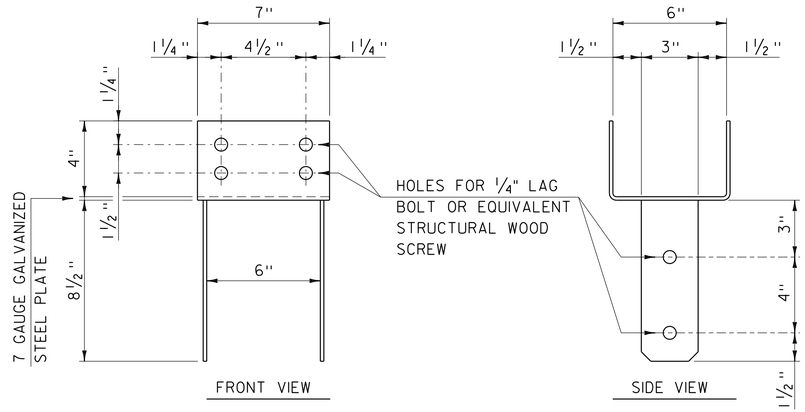

6x6 COLUMN CONNECTOR

SCALE: 3" = 1'-0"

1) THE 7 GAUGE GALVANIZED STEEL PLATE USED FOR CONNECTIONS HAS AN ASSUMED APPROXIMATE THICKNESS OF 0.138".

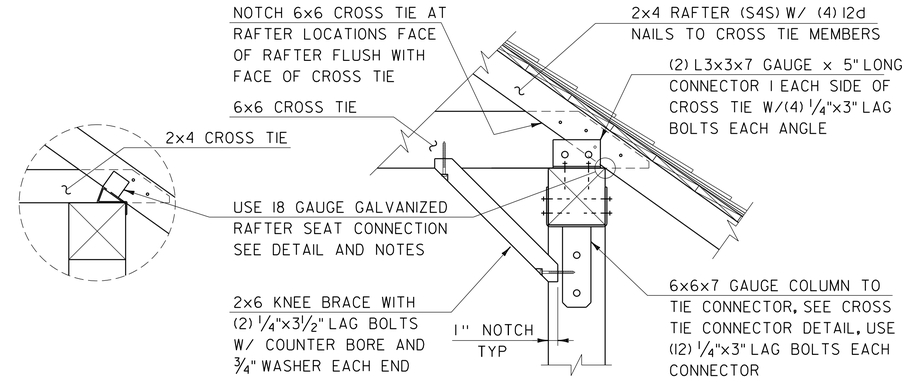

CROSS TIE DETAIL

SCALE: 1 1/2" = 1'-0"

1) ALL 1/4" LAG BOLTS SHALL BE ZINC PLATED, HEX HEAD LAG SCREWS WITH A 3/4" WASHER, OR EQUIVALENT STRUCTURAL WOOD SCREW. PRE DRILL A PILOT HOLE FOR EACH BOLT.

2) ALL RAFTERS NOT LAPPED AND NOTCHED INTO A 6x6 CROSS TIE MEMBER SHALL BE CONNECTED TO THE 6x6 TOP PLATE MEMBER WITH AN 18 GAUGE, GALVANIZED STEEL, VARIABLE PITCH CONNECTION PLATE. THE RAFTERS SHALL ALSO BE NAILED TO THE 2x4 CROSS TIE MEMBERS WITH (2) 8d NAILS.

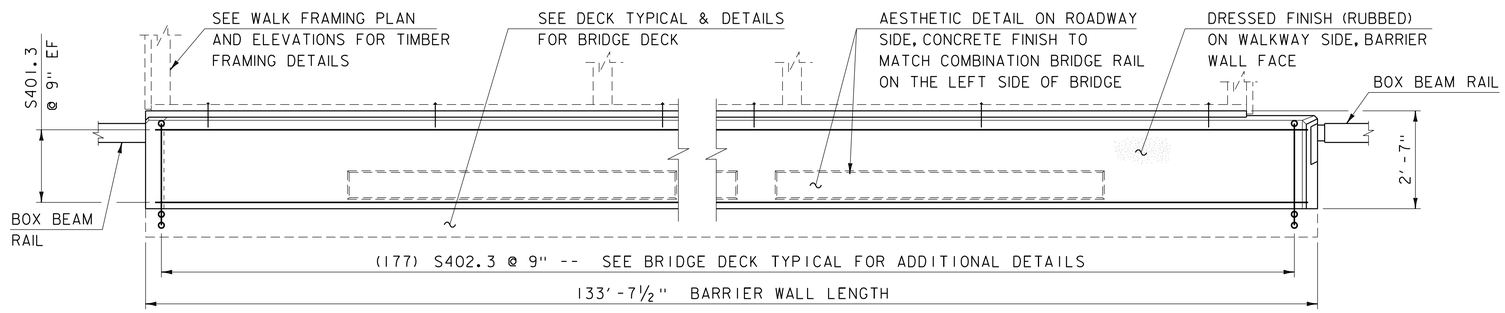

BARRIER WALL ELEVATION C-C

SCALE: 1/2" = 1'-0"

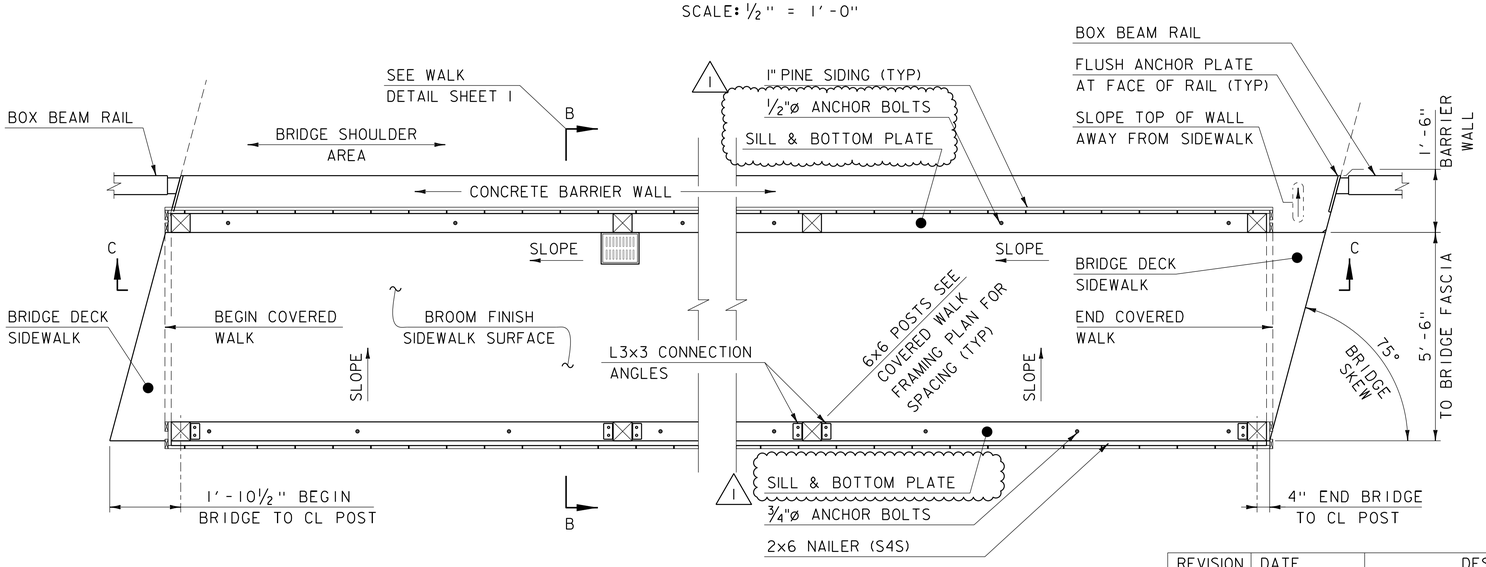

COVERED WALK PLAN DETAIL

SCALE: 1/2" = 1'-0"

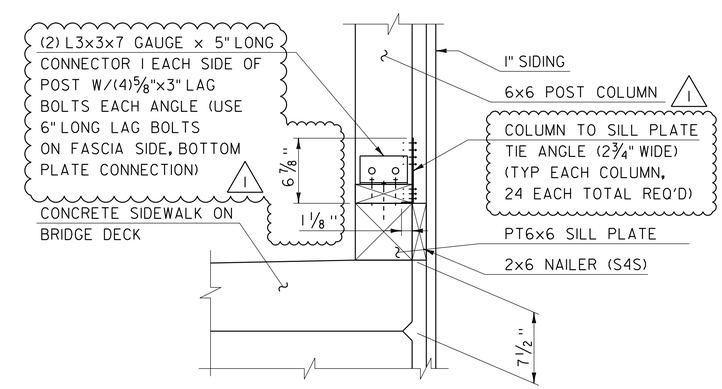

POST COLUMN CONNECTION DETAIL

SCALE: 1 1/2" = 1'-0"

1) THE 4x4 CRIPPLE POST SHALL HAVE (2) 16D GALVANIZED NAILS ON (2) SIDES.

NOTE: DIMENSION IN INCHES UNLESS OTHERWISE NOTED.

REVISION	DATE	DESCIPTION	BY
1	02-20-2015	USE DOUBLE SILL BOTTOM PLATE ADD SILL CONNECTORS PLATE	MCL

PROJECT NAME: STOWE
PROJECT NUMBER: BRF 0235 (11)

FILE NAME: s87e052walk.dgn
PROJECT LEADER: C. CARLSON
DESIGNED BY: D. PETERSON
WALK DETAIL SHEET 2

PLOT DATE: 04-MAR-2015
DRAWN BY: M. LONGSTREET
CHECKED BY: J. LACROIX
SHEET 35 OF 64

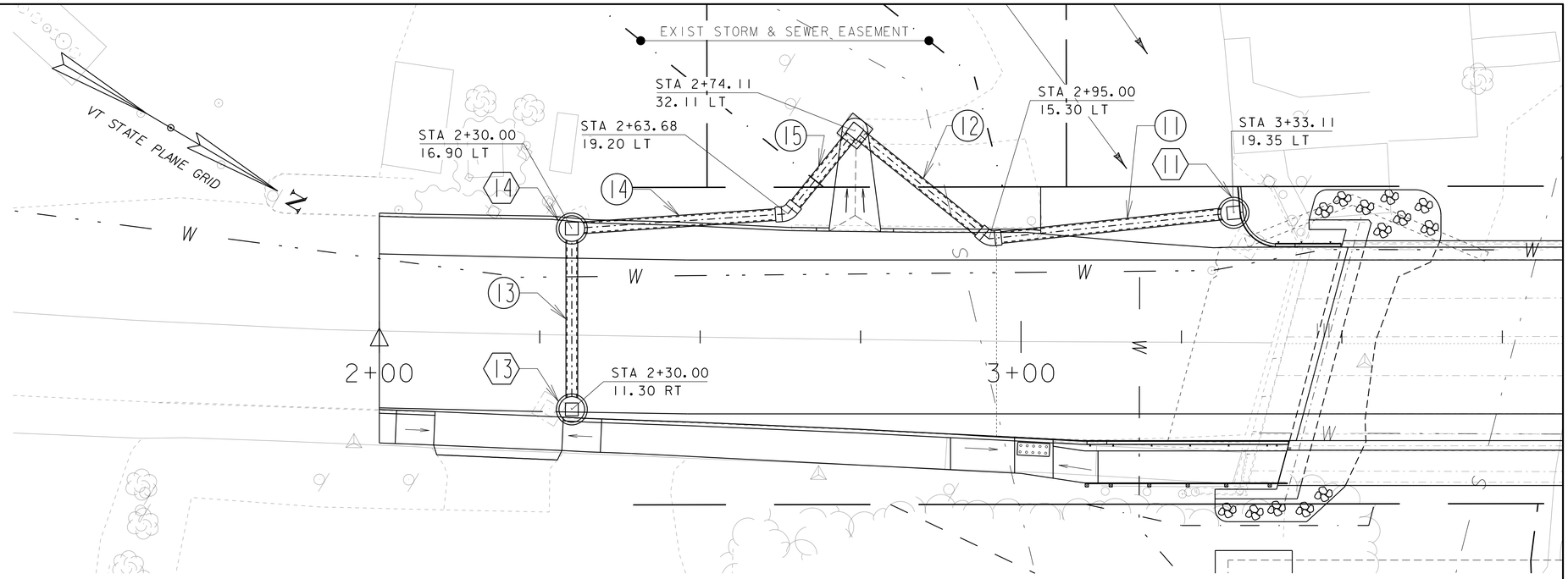

ADDITIONAL
VERTICAL GRANITE CURB
VT108 STA 2+00.00 LT - STA 2+70.12 LT
VT108 STA 2+78.11 LT - STA 3+03.06 LT

INLET #11 - PIPE #11
45°ELBOW - PIPE #12
TO EXISTING INLET 101

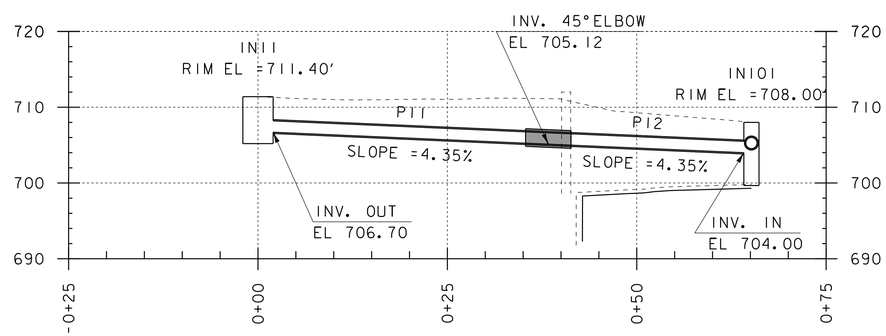

INLET #13 - PIPE #13
INLET #14 - PIPE #14
45°ELBOW - PIPE #15
TO EXISTING INLET

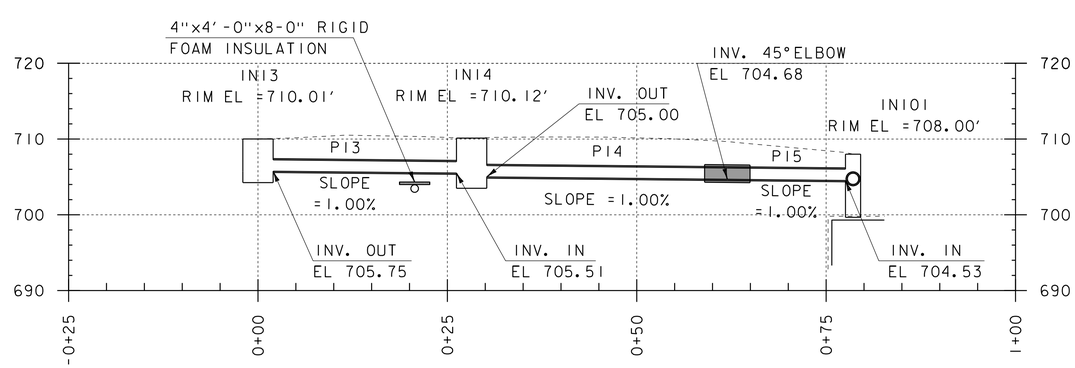

PROJECT NAME: STOWE	
PROJECT NUMBER: BRF 0235 (II)	
FILE NAME: s87e052xsl.dgn	PLOT DATE: 17-FEB-2015
PROJECT LEADER: C. CARLSON	DRAWN BY: D. KARABEGOVIC
DESIGNED BY: D. PETERSON	CHECKED BY: M. LONGSTREET
REVISED PIPE PROFILES REV 4	SHEET 4 OF 4

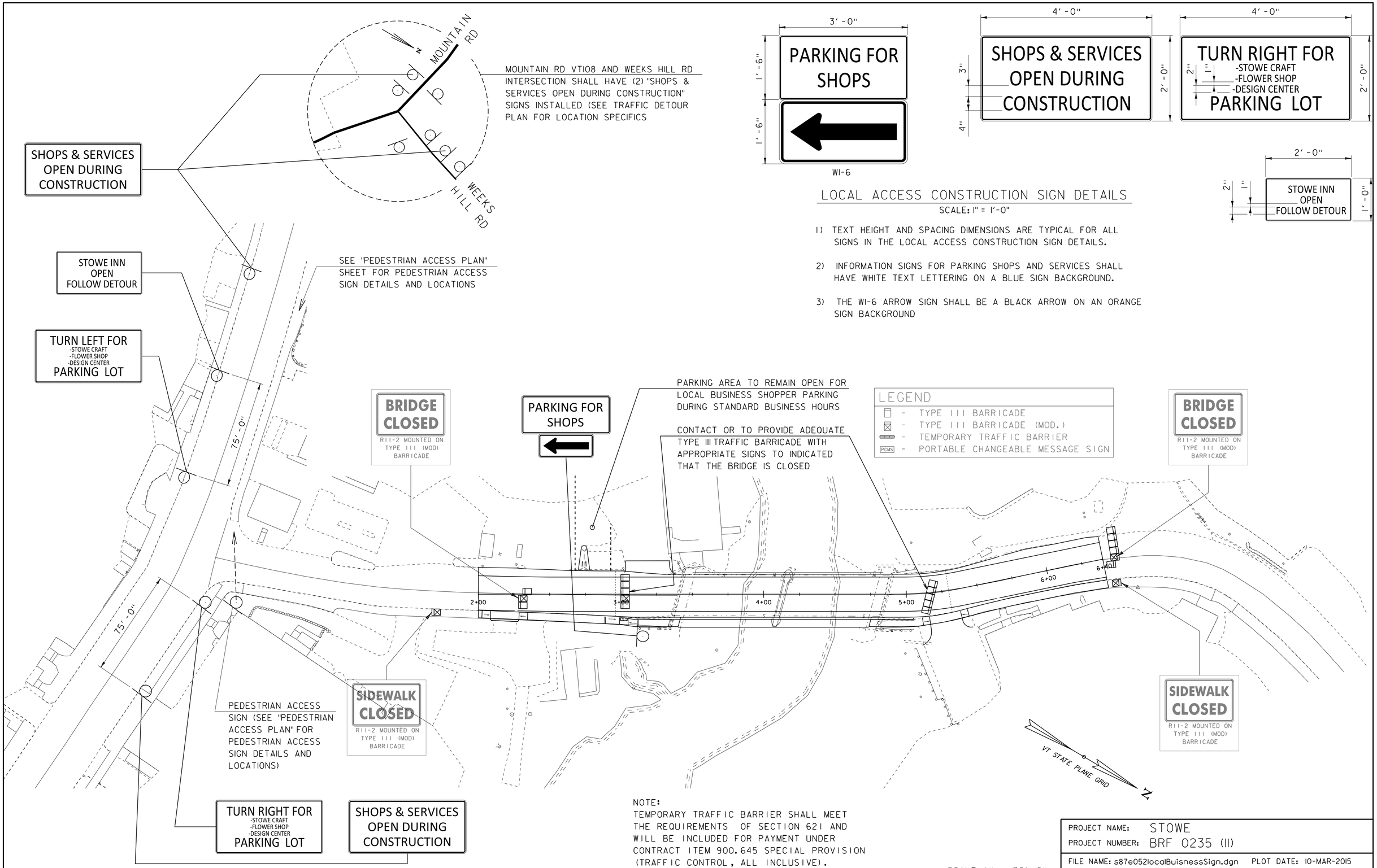

LOCAL ACCESS CONSTRUCTION SIGN DETAILS

SCALE: 1" = 1'-0"

1) TEXT HEIGHT AND SPACING DIMENSIONS ARE TYPICAL FOR ALL SIGNS IN THE LOCAL ACCESS CONSTRUCTION SIGN DETAILS.

2) INFORMATION SIGNS FOR PARKING SHOPS AND SERVICES SHALL HAVE WHITE TEXT LETTERING ON A BLUE SIGN BACKGROUND.

3) THE W1-6 ARROW SIGN SHALL BE A BLACK ARROW ON AN ORANGE SIGN BACKGROUND

NOTE:
TEMPORARY TRAFFIC BARRIER SHALL MEET THE REQUIREMENTS OF SECTION 621 AND WILL BE INCLUDED FOR PAYMENT UNDER CONTRACT ITEM 900.645 SPECIAL PROVISION (TRAFFIC CONTROL, ALL INCLUSIVE).
PORTABLE CHANGEABLE MESSAGE SIGNS WILL BE PAID SEPARATELY UNDER CONTRACT ITEM 641.15.

SCALE 1" = 30'-0"
30 0 30

PROJECT NAME: STOWE	
PROJECT NUMBER: BRF 0235 (11)	
FILE NAME: s87e052localBuisnessSign.dgn	PLOT DATE: 10-MAR-2015
PROJECT LEADER: C. CARLSON	DRAWN BY: M. LONGSTREET
DESIGNED BY: D. PETERSON	CHECKED BY: J. LACROIX
LOCAL BUSINESS TRAFFIC CONTROL	SHEET 1 OF 3

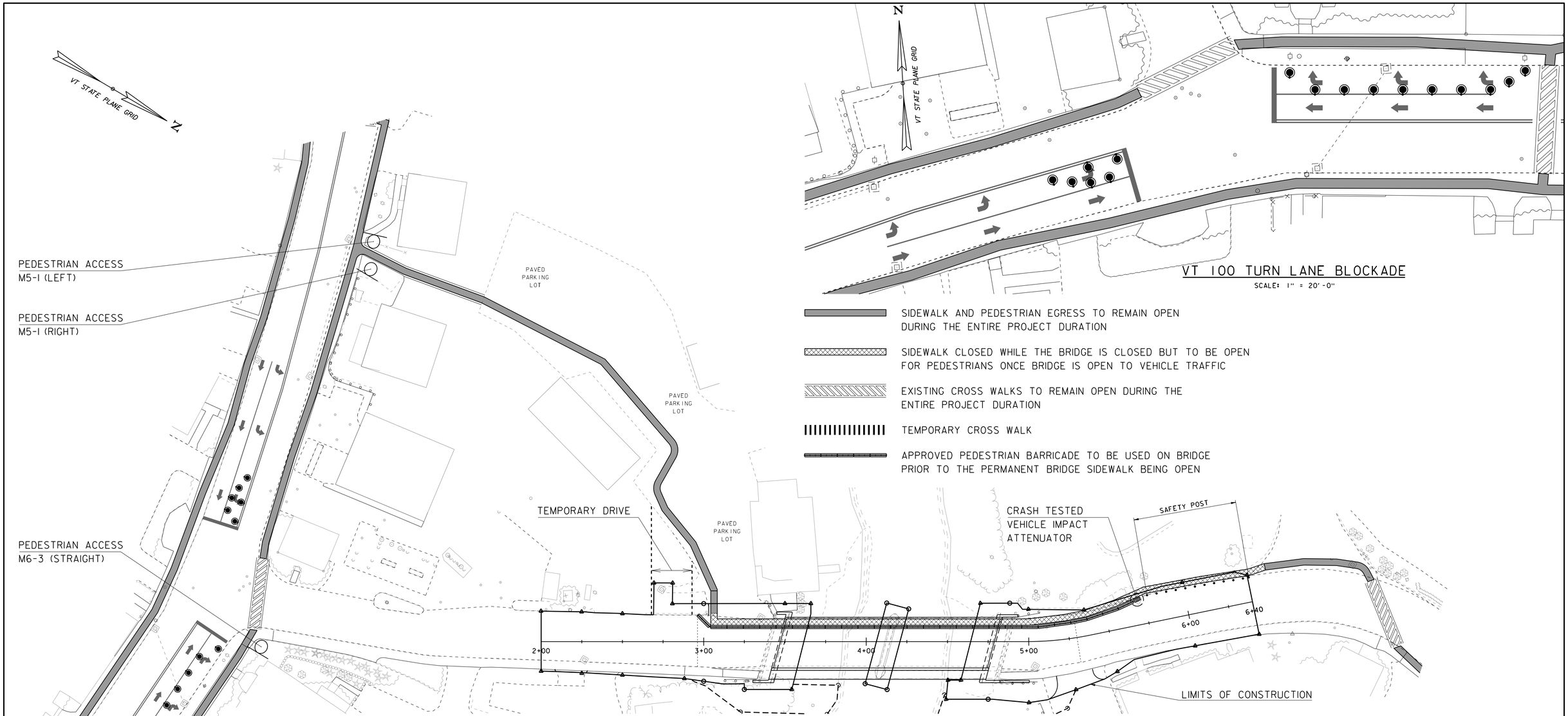

VT 100 TURN LANE BLOCKADE

SCALE: 1" = 20'-0"

SIDEWALK AND PEDESTRIAN EGRESS TO REMAIN OPEN DURING THE ENTIRE PROJECT DURATION

SIDEWALK CLOSED WHILE THE BRIDGE IS CLOSED BUT TO BE OPEN FOR PEDESTRIANS ONCE BRIDGE IS OPEN TO VEHICLE TRAFFIC

EXISTING CROSS WALKS TO REMAIN OPEN DURING THE ENTIRE PROJECT DURATION

TEMPORARY CROSS WALK

APPROVED PEDESTRIAN BARRICADE TO BE USED ON BRIDGE PRIOR TO THE PERMANENT BRIDGE SIDEWALK BEING OPEN

TRAFFIC BARREL / DRUM USED TO CLOSE TURNING LANES FROM VT 100 TO VT 108

TRAFFIC SAFETY DELINEATOR POST

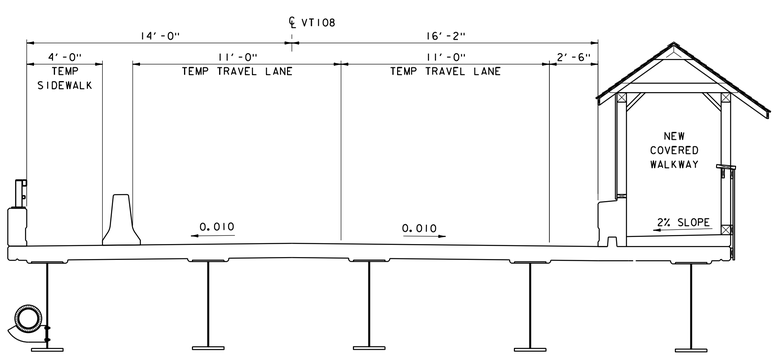

TEMPORARY PEDESTRIAN BRIDGE ACCESS

SCALE: 3/8" = 1'-0"

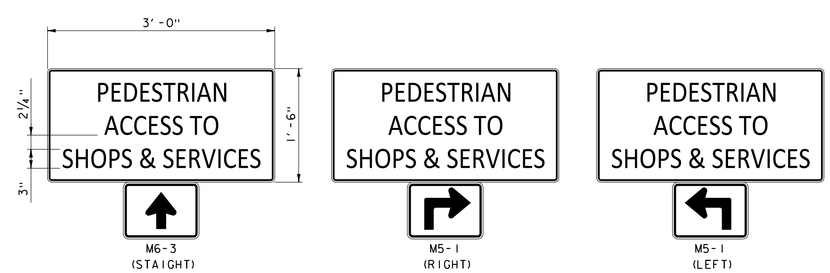

PEDESTRIAN SIDEWALK SIGNS

1) PEDESTRIAN ACCESS SIGNS SHALL HAVE WHITE TEXT LETTERNG WITH A BLUE SIGN BACKGROUND.

2) THE M6-3 AND M5-1 DIRECTION ARROW SIGNS SHALL HAVE WHITE DIRECTIONAL ARROWS ON A BLUE SIGN BACKGROUND.

PROJECT NAME: STOWE	
PROJECT NUMBER: BRF 0235(11)	
FILE NAME: s87e0521pedAccBdr.dgn	PLOT DATE: 26-FEB-2015
PROJECT LEADER: C.W. CARLSON	DRAWN BY: M. LONGSTREET
DESIGNED BY: D. PETERSON	CHECKED BY: D. PETERSON
PEDESTRIAN ACCESS PLAN	SHEET 2 OF 3

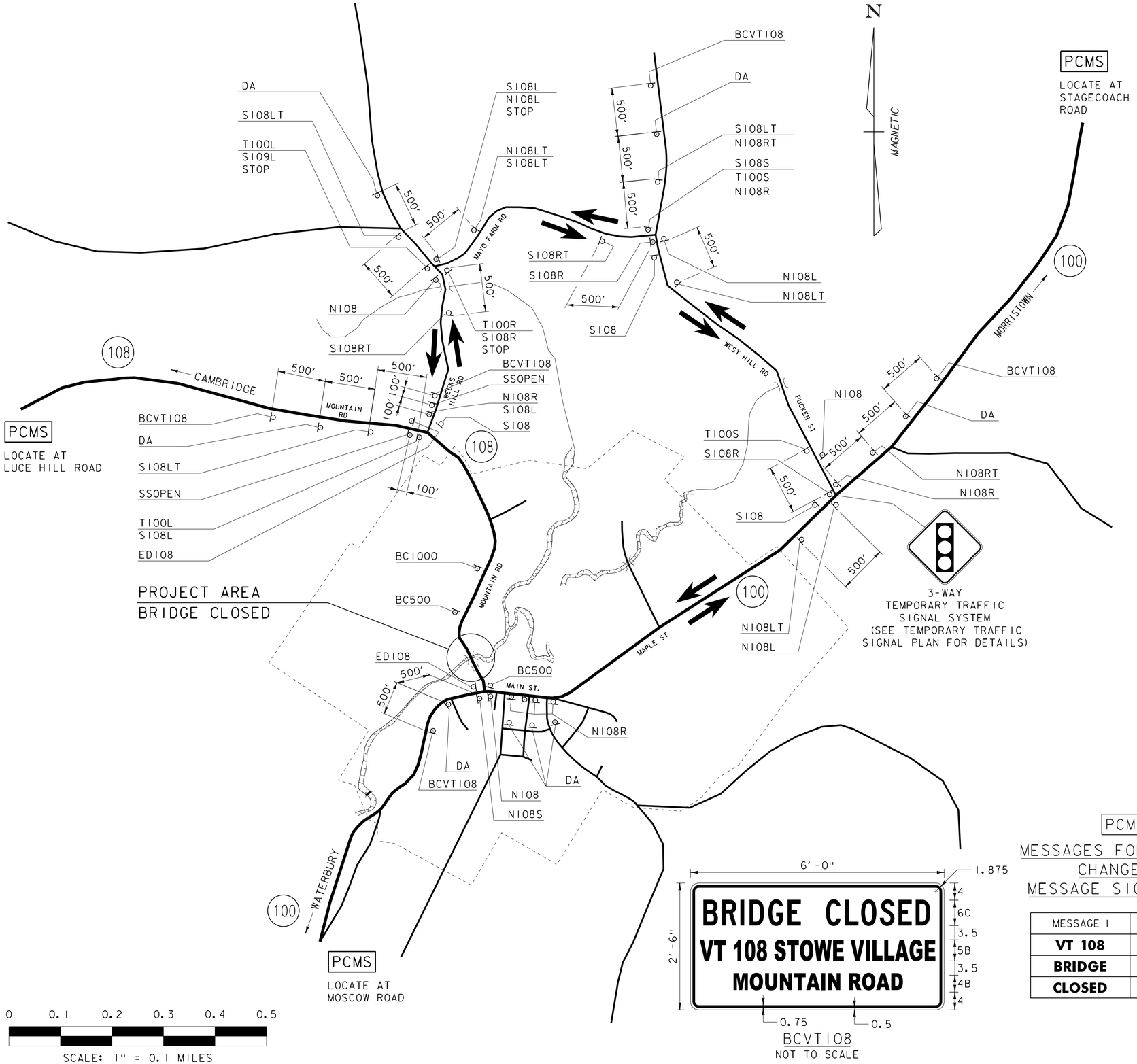

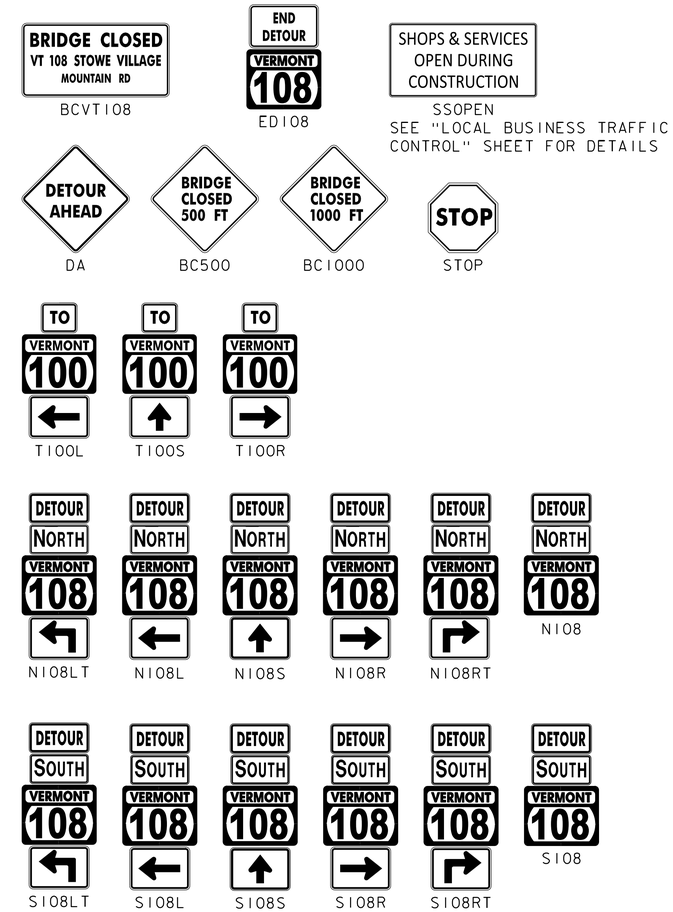

NOTES:

1. THE NUMBER OF TYPE III BARRICADES AND OTHER TRAFFIC CONTROL DEVICES SHOWN ARE FOR ILLUSTRATIVE PURPOSES ONLY. THE ACTUAL NUMBER REQUIRED ARE TO BE DETERMINED BASED ON INDIVIDUAL ROADWAY CLOSURE REQUIREMENTS.

2. PORTABLE CHANGEABLE MESSAGE SIGNS (PCMS) SHALL BE PLACED OFF THE EDGE OF THE ROADWAY, OUTSIDE THE CLEAR ZONE, BUT SHALL BE VISIBLE FROM THE ROADWAY. ANY VEGETATION THAT INTERFERES WITH VISIBILITY OF THE PCMS SHALL BE REMOVED. REMOVAL OF THE VEGETATION SHALL BE INCIDENTAL TO ITEM 641.15, "PORTABLE CHANGEABLE MESSAGE SIGN".

3. SEE CONTRACT DOCUMENTS FOR CLOSURE DATES.

BCVT108
NOT TO SCALE

PCMS

MESSAGES FOR PORTABLE CHANGEABLE MESSAGE SIGNS (PCMS)

MESSAGE 1	MESSAGE 2
VT 108	****DATE****
BRIDGE	**THRU**
CLOSED	****DATE****

0 0.1 0.2 0.3 0.4 0.5

SCALE: 1" = 0.1 MILES

PROJECT NAME: STOWE	
PROJECT NUMBER: BRF 0235 (11)	
FILE NAME: s87e052detour.dgn	PLOT DATE: 26-FEB-2015
PROJECT LEADER: C. CARLSON	DRAWN BY: M. LONGSTREET
DESIGNED BY: D. PETERSON	CHECKED BY: J. LACROIX
TRAFFIC DETOUR PLAN	SHEET 3 OF 3