S.D. Ireland Companies
Precast Division

193 Industrial Ave. Williston, VT 05495
P.O. Box 2286 South Burlington, VT 05407
p: 802-863-6222 f: 802-860-1528
www.sdireland.com

Attention:	Brian Richardson	Date:	1/12/2015
Company:	C.C.S. Constructors	Job Name:	Stowe BRF 0235(11)
Address:	138 Munson Ave	Job Number:	#15163
City, St, Zip:	Morrisville, VT 05661	Regarding:	Abutment, Wing Wall, and Retaining Wall Submittal #2
Ph: / Fax:	802-888-7701		

WE ARE SENDING:

- [ ] Quote
- [x] Details
- [ ] Other: _____
- [x] Submittals
- [ ] Prints
- [ ] Plans
- [ ] Specifications
- [ ] Copy Of Letter
- [ ] Change Order
- [ ] Samples
- [ ] Revised Submittals

Copies	Date	Pages	Description
1	1/12/2015	1	Transmittal Cover Page
1	1/8/2015	11	S.D.I. Abutment, Wing Wall, and Approach Slab Drawings
1	1/12/2015	5	Dimension Fabricators Reinforcement Drawings
1	4/17/2014	1	State Concrete Mix Design
1	11/21/2014	1	Tensioning Plate Detail
1		2	Grout Splice Sleeve Detail
1	1/8/2015	13	Lifting Analysis Calculations and details

These Are Submitted as Checked Below:

- [ ] For Approval
- [ ] Approved as Submitted
- [x] Resubmit __ Copies for Approval
- [x] For Your Use
- [ ] Approved as Noted
- [ ] Submit__ Copies for Distribution
- [ ] As Requested
- [ ] Returned for Corrections
- [ ] Return __ Corrected Prints
- [ ] For Review and Comment
- [ ] Prints Returned After Loan to Us
- [ ] For Bids Due: _____
- [ ] Other:

Notes/Remarks:

Brian,

Please pass on to the state for approvals.

Let me know if you have any questions.

Thank you.

Eric Barendse x265

Copy To: _____

Signed: Eric Barendse

If enclosures are not as noted, kindly notify us at once.

Precast Bridge Abutments

Stowe BRF 0235(II)

Concrete:

Mix Designation: P50TER

1. Specified Mix Design	5000 PSI
2. Proposed Mix Design	6000 PSI
3. Striping Strength	4250 PSI
4. Handling Strength	4250 PSI
5. Shipping Strength	5000 PSI
6. Install Strength	5000 PSI
7. Traffic Loading	5000 PSI

Fabrication Tolerances:

1. Width	±1/4"
2. Height	±1/4"
3. Length	±1/2"
4. Rebar Cover	3" Min. (Unless Noted Otherwise)
5. Rebar Spacing	±1"
6. Rebar Clearance	±1/4"
7. Insert Placement	±1/4"

Reinforcing:

General Notes:

1. Reinforcing Steel - ASTM A615, Grade 60, Level II, Dual Coated
2. Materials and Manufacturing shall conform to ASTM C1433
3. Bar tied at every intersection.
4. Grout Sleeves to be epoxy coated.
5. 5' long test bars for each bar size size will be provided along with (3) grout couplers for each size bar.

Tolerances:

1. Spacing ±1"
2. Clearance ±1/4"
3. Clear Cover 3" U.N.O.

Lap Lengths:

1. Per AASHTO 5.11.2.1.1 & 5.11.5.3.1
   Lap Length for Level II (Dual Coated):
   #4 Bar=17"
   #5 Bar=26"
   #6 Bar=39"
   #7 Bar=53"
   #8 Bar=69"

Note: See pg 6 for typical vertical lap lengths for bars extending into cast in place abutment sections

General Notes:

1. All precast pieces will be dry fit prior to shipping.
2. All lifting anchor points to be grouted after use.(by site contractor
3. All rebar spacing chairs to be plastic
4. All exposed edges to be chamfered $\frac{3}{4}$"

Post Tensioning

1. All anchoring assemblies will be galvanized plated.
2. Two tensioning strands per duct.
3. Tension ducts will be 3" SCH 40 PVC conduit.
4. Post tension strands will be .5"Ø, 270 ksi, low relaxation, 7-wire strands.
5. Strands will be tensioned to 32 kips prior to the H-pile sleeves being filled with HPC RS.
6. Tensioning block outs to be filled with grout of vertical overhead repair material after tensioning is complete.

Per general notes, all exposed edges shall be chamfered 1" x 1" unless otherwise noted

Agree provide two, 5-foot test bars for each bar size. It should be noted that none of the quantities provided on the reinforcing sheet schedules account for the additional bars, so that should be kept in mind.

Vermont Agency of Transportation
RECEIVED
Abutment Submittal 2 011215_Markup.pdf
CK'D BY CLB OK'D BY DRP
January 13, 2015
RESUBMIT NO Approved AsNoted
BY C. CARLSON DATE 01/15/15

CONTRACTORS VTSPE:

- Rev. 1 - 01/ 08 /15 - Changes per VTrans Review

PRECAST CONCRETE ABUTMENT SHOP DRAWINGS (SDI JOB #15163)

SUPERVISOR: M. WHEELER
DETAILER: I. ADAMS
CHECKER: E. Barendse
ENGINEER:

PROJECT NAME: Stowe BRF 0235 (II)
PROJECT #: 0235 (II)
LOCATION: Stowe, VT

INSTALLER: CCS Construction, 138 Munson Ave, Morrisville, VT 05661, PH: 802-888-7701

FABRICATOR: 193 INDUSTRIAL AVE. WILLISTON, VT 05495 Ph: (802) 658-0201
SD Ireland Precast Division

01/08/15 | Abutment Text | 1 of 11

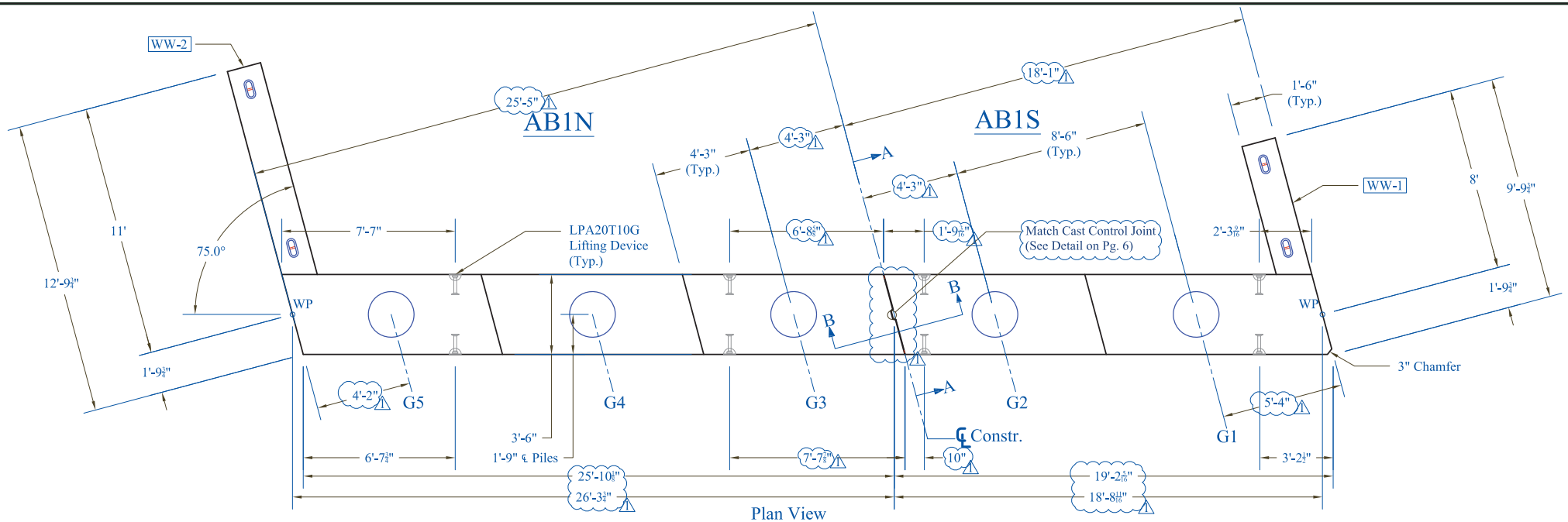

Plan View

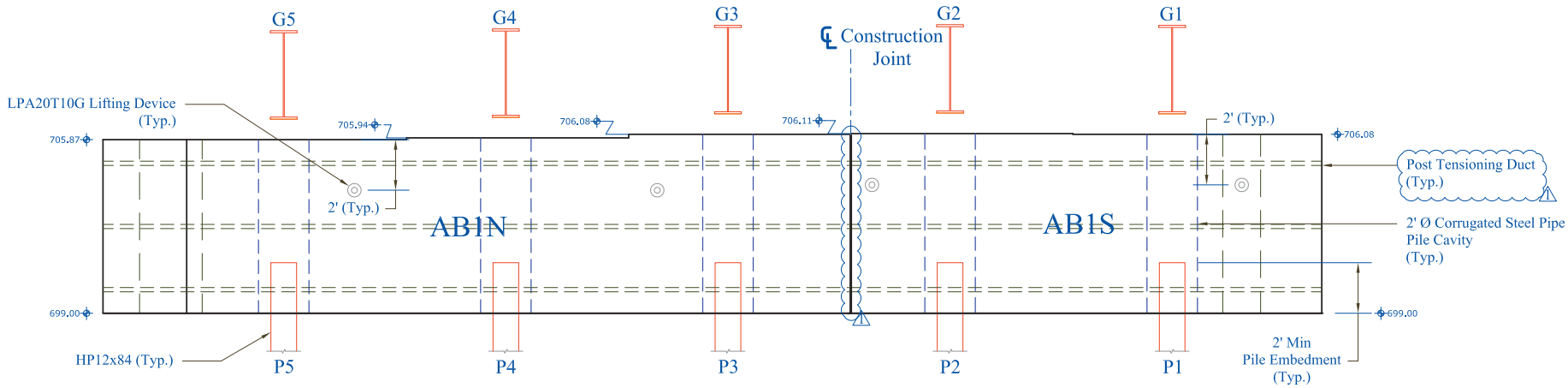

Elevation View

AB1N: 84,926 lbs
AB1S: 62,374 lbs

Vermont Agency of Transportation
RECEIVED
Abutment Submittal 2 011215_Markup.pdf
CK'D BY CLB OK'D BY DRP
January 13, 2015
RESUBMIT NO Approved
BY C. CARLSON DATE 01/15/15

PRECAST CONCRETE ABUTMENT SHOP DRAWINGS (SDI JOB #15163)		INSTALLER: CCS Construction 138 Munson Ave Morrisville, VT 05661 PH: 802-888-7701	FABRICATOR: 193 INDUSTRIAL AVE. WILLISTON, VT 05495 Ph: (802) 658-0201 SD Ireland Precast Division
SUPERVISOR: M. WHEELER DETAILER: I. ADAMS CHECKER: E. Barendse ENGINEER:	PROJECT NAME: Stowe BRF 0235 (II) PROJECT #: 0235 (II) LOCATION: Stowe, VT	01/08/15	Abutment 1 — 2 of 11

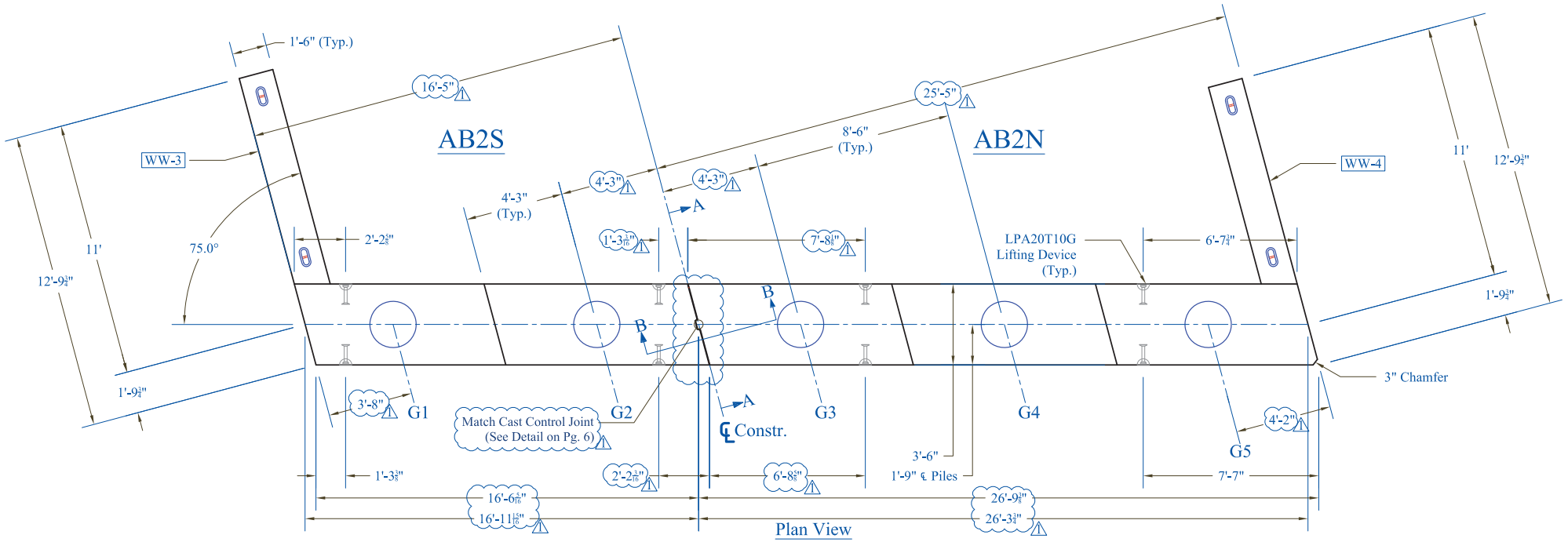

Plan View

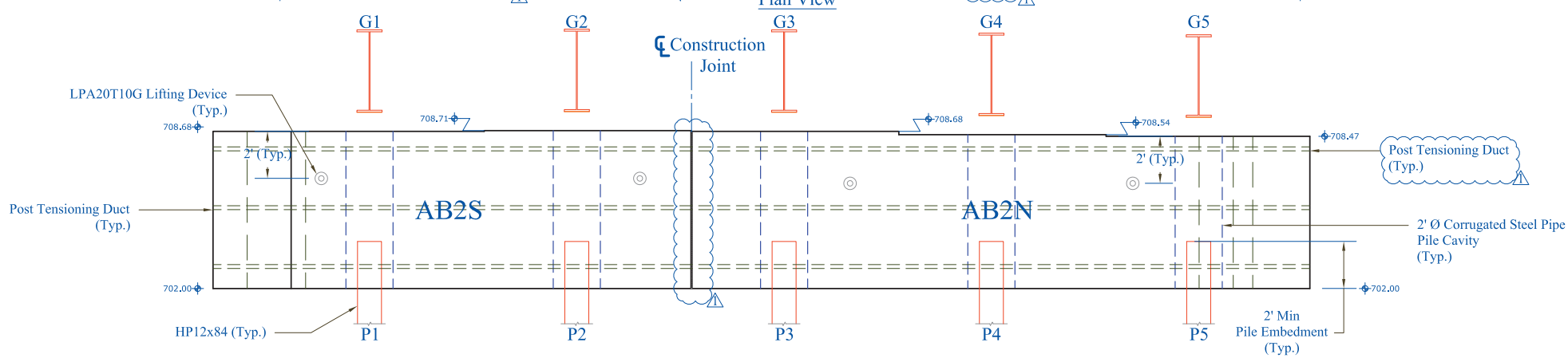

Elevation View

AB2S: 53,774 lbs.
AB2N: 80,126 lbs

Vermont Agency of Transportation
RECEIVED
Abutment Submittal 2 011215_Markup.pdf

CK'D BY CLB OK'D BY DRP

January 13, 2015

RESUBMIT NO Approved

BY C. CARLSON DATE 01/15/15

w

PRECAST CONCRETE ABUTMENT SHOP DRAWINGS (SDI JOB #15163)		INSTALLER: CCS Construction 138 Munson Ave Morrisville, VT 05661 PH: 802-888-7701	FABRICATOR: 193 INDUSTRIAL AVE. WILLISTON, VT 05495 Ph: (802) 658-0201 SD Ireland Precast Division
SUPERVISOR: M. WHEELER DETAILER: I. ADAMS CHECKER: E. Barendse ENGINEER:	PROJECT NAME: Stowe BRF 0235 (II) PROJECT #: 0235 (II) LOCATION: Stowe, VT	01/08/15	Abutment 2 — 3 of 11

Vermont Agency of Transportation

RECEIVED

Abutment Submittal 2 011215_Markup.pdf

CK'D BY CLB OK'D BY DRP

January 13, 2015

RESUBMIT NO Approved

BY C. CARLSON DATE 01/15/15

WW2: Plan View

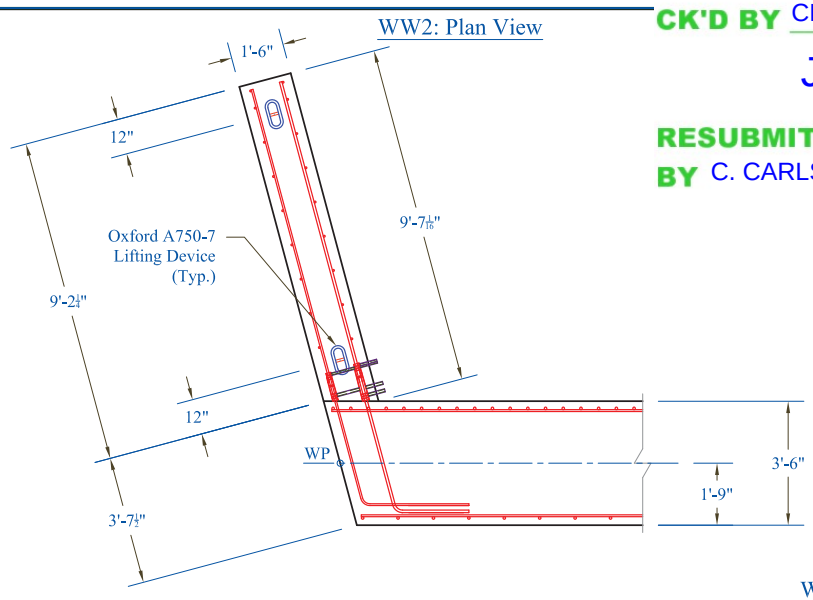

Weight: 9,450 lbs.

WW1: Plan View

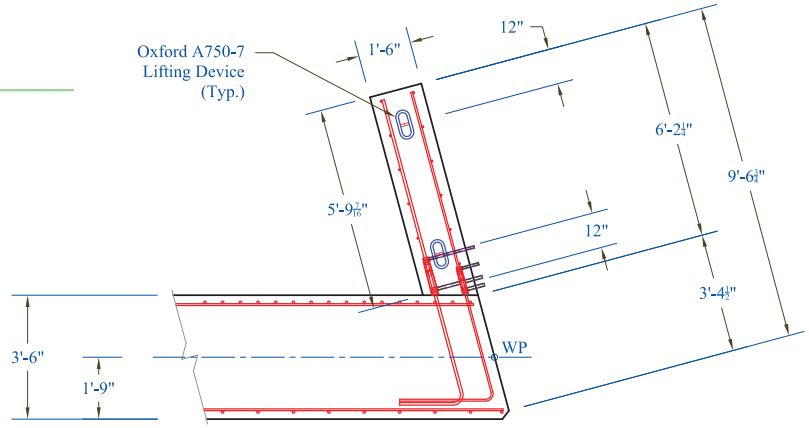

Weight: 9,400 lbs.

WW2: Elevation View

(Reference Dimension Fabricators Sheet F for Bar Size, Type, and Schedule) 1

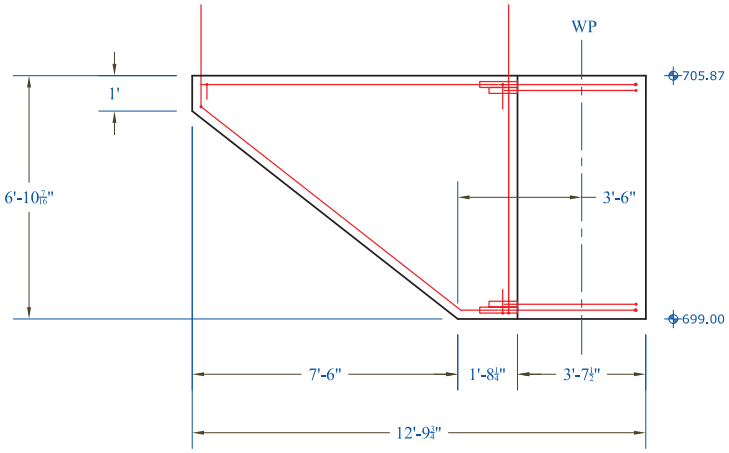

WW1: Elevation View

(Reference Dimension Fabricators Sheet F for Bar Size, Type, and Schedule) 1

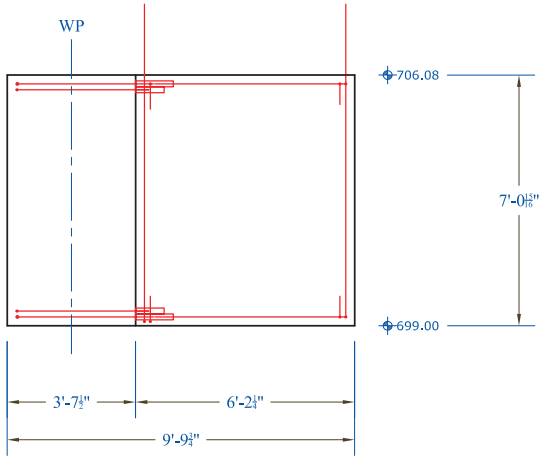

CONTRACTORS VTSPE:

1 - Rev. 1 - 01/ 08 /15 - Changes per VTrans Review

PRECAST CONCRETE ABUTMENT SHOP DRAWINGS (SDI JOB #15163)

SUPERVISOR: M. WHEELER
DETAILER: I. ADAMS
CHECKER: E. Barendse
ENGINEER:

PROJECT NAME: Stowe BRF 0235 (II)
PROJECT #: 0235 (II)
LOCATION: Stowe, VT

INSTALLER:
CCS Construction
138 Munson Ave
Morrisville, VT 05661
PH: 802-888-7701

FABRICATOR:
193 INDUSTRIAL AVE.
WILLISTON, VT 05495
Ph: (802) 658-0201

SD Ireland Precast Division

01/08/15 | Wingwalls 1 & 2 | 4 of 11

Vermont Agency of Transportation

RECEIVED

Abutment Submittal 2 011215_Markup.pdf

CK'D BY CLB OK'D BY DRP

January 13, 2015

RESUBMIT NO Approved

BY C. CARLSON DATE 01/15/15

WW3: Plan View

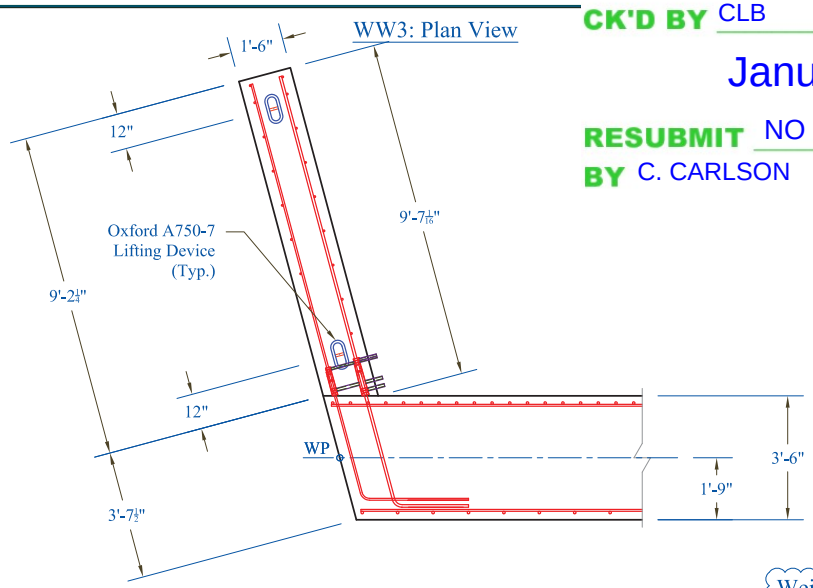

Weight: 9,160 lbs.

WW4: Plan View

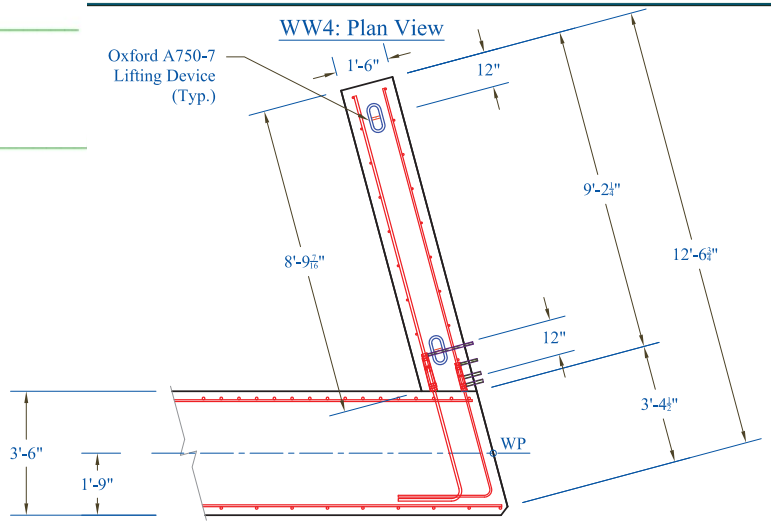

Weight: 8,800 lbs.

WW3: Elevation View

(Reference Dimension Fabricators Sheet J for Bar Size, Type, and Schedule)

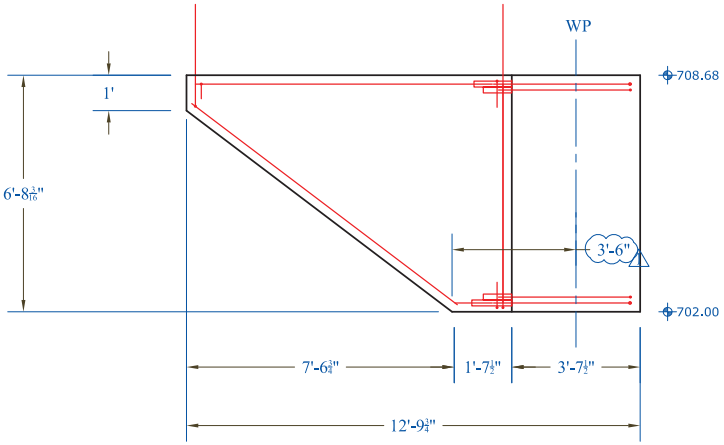

WW4: Elevation View

(Reference Dimension Fabricators Sheet J for Bar Size, Type, and Schedule)

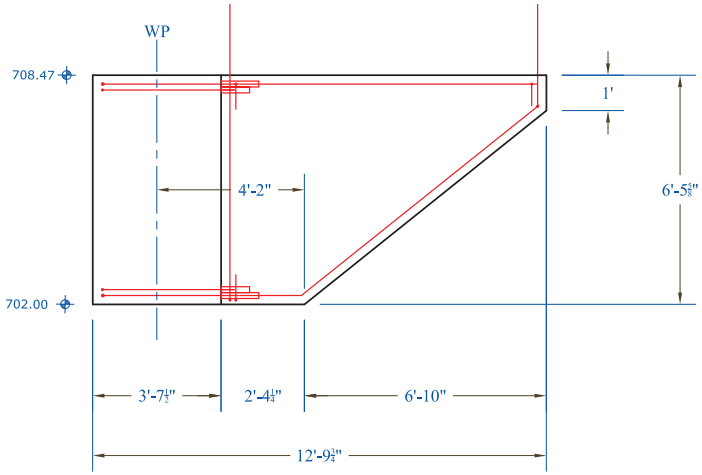

CONTRACTORS VTSPE:

1 - Rev. 1 - 01/ 08 /15 - Changes per VTrans Review

PRECAST CONCRETE ABUTMENT SHOP DRAWINGS (SDI JOB #15163)

SUPERVISOR: M. WHEELER
DETAILER: I. ADAMS
CHECKER: E. Barendse
ENGINEER:

PROJECT NAME: Stowe BRF 0235 (II)
PROJECT #: 0235 (II)
LOCATION: Stowe, VT

INSTALLER:
CCS Construction
138 Munson Ave
Morrisville, VT 05661
PH: 802-888-7701

FABRICATOR:
193 INDUSTRIAL AVE.
WILLISTON, VT 05495
Ph: (802) 658-0201

SD Ireland Precast Division

01/08/15

Wingwalls 3 & 4

Match Cast Joint Detail

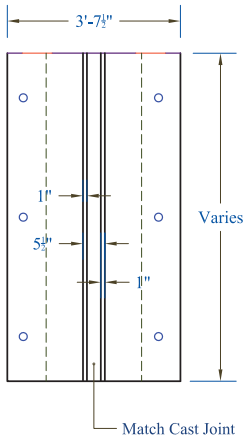

Abutment Face: A-A (Pgs 2 & 3)

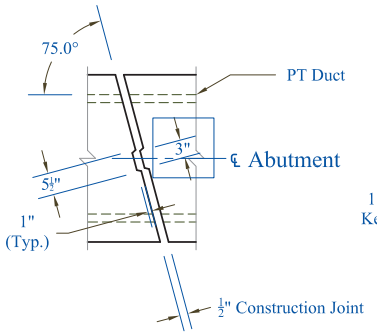

Plan View

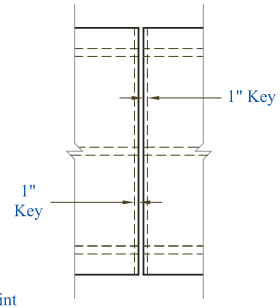

Section View: B-B (Pgs 2 & 3)

Abutment 1 & 2: Typical Section

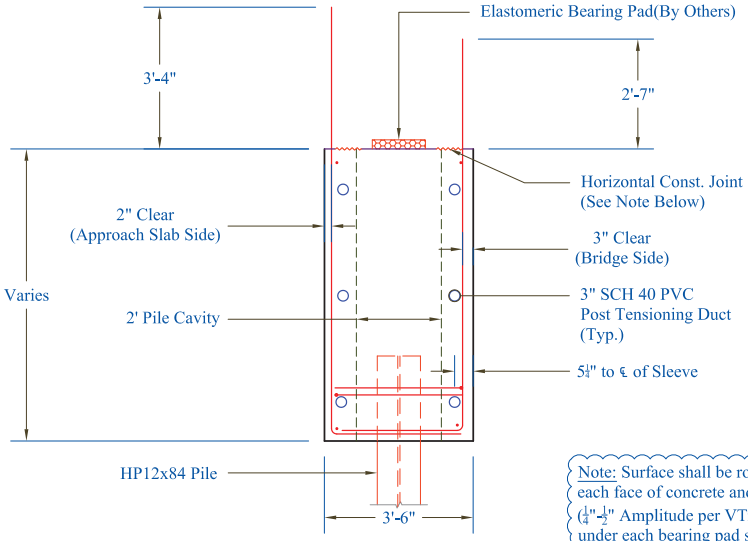

Note: Surface shall be roughened to within 3" of each face of concrete and 3" from H-pile sleeve (¼"-½" Amplitude per VTrans std 501.00). Surface under each bearing pad shall be smooth.

Wingwall Grout Sleeve Detail

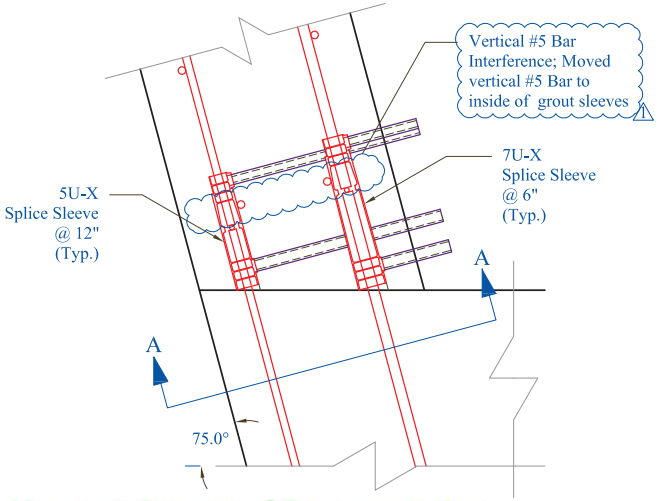

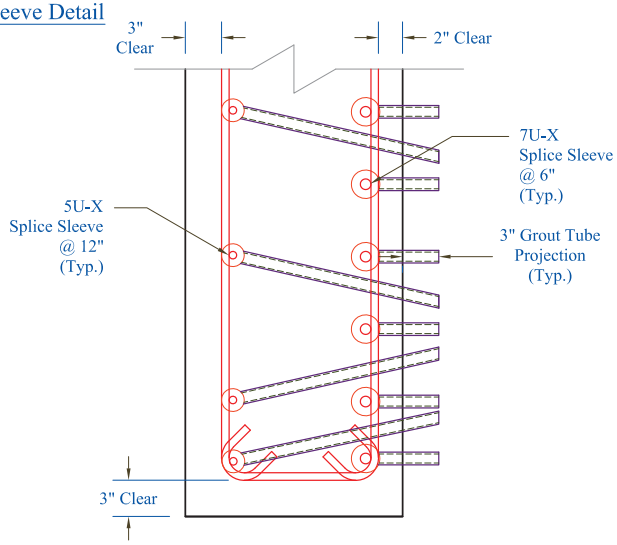

End Section View: A-A

Wingwall 1 - 4: Typical Section

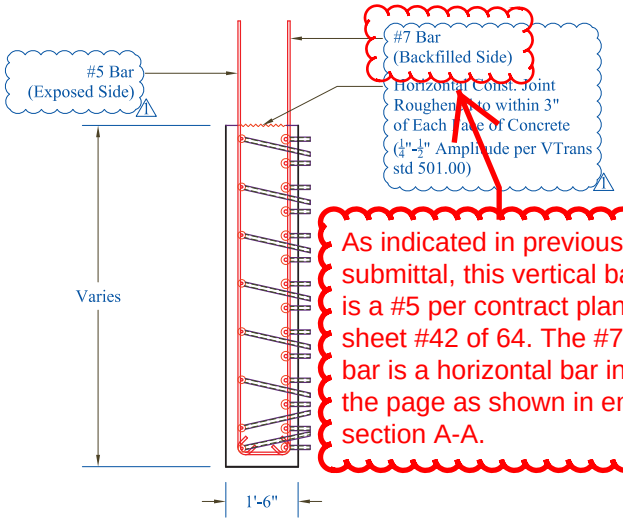

As indicated in previous submittal, this vertical bar is a #5 per contract plans sheet #42 of 64. The #7 bar is a horizontal bar into the page as shown in end section A-A.

Vermont Agency of Transportation
RECEIVED
Abutment Submittal 2 011215_Markup.pdf

CK'D BY CLB OK'D BY DRP

January 13, 2015

RESUBMIT NO Approved AsNoted

BY C. CARLSON DATE 01/15/15

Review

PRECAST CONCRETE ABUTMENT SHOP DRAWINGS (SDI JOB #15163)				
SUPERVISOR: M. WHEELER DETAILER: I. ADAMS CHECKER: E. Barendse ENGINEER:	PROJECT NAME: Stowe BRF 0235 (II) PROJECT #: 0235 (II) LOCATION: Stowe, VT	INSTALLER: CCS Construction 138 Munson Ave Morrisville, VT 05661 PH: 802-888-7701	FABRICATOR: 193 INDUSTRIAL AVE. WILLISTON, VT 05495 Ph: (802) 658-0201	SD Ireland Precast Division
		01/08/15	Wing Wall & Abutment Details	6 of 11

Retaining Wall Elevation

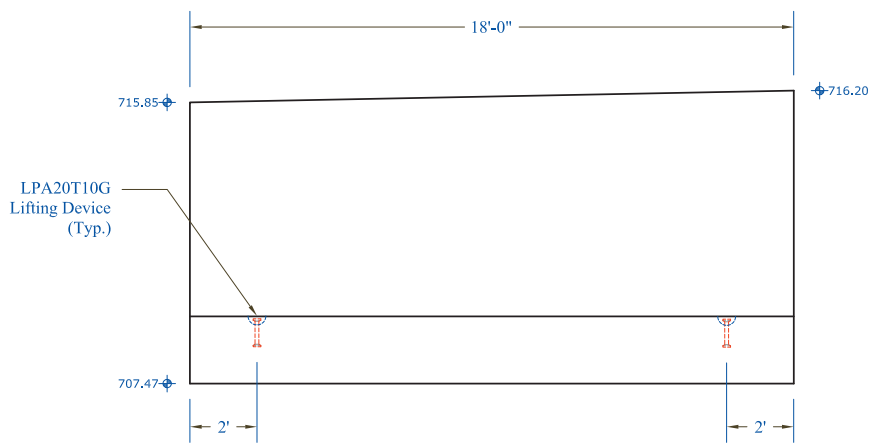

Retaining Wall Typical Section

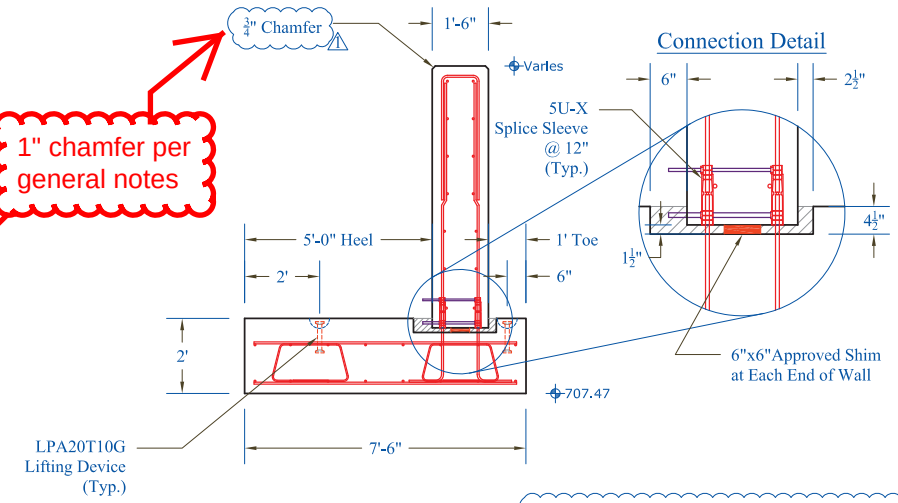

1" chamfer per general notes

See reinforcing sheet K for bar size/I.D.

Retaining Wall Stem

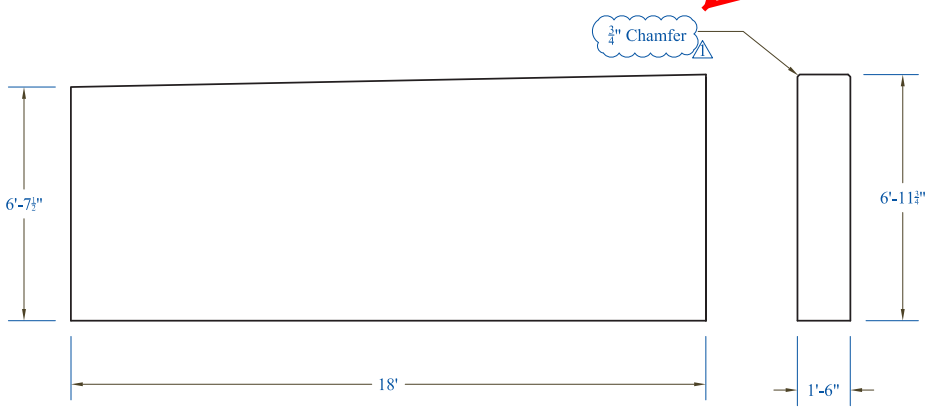

Retaining Wall Footing

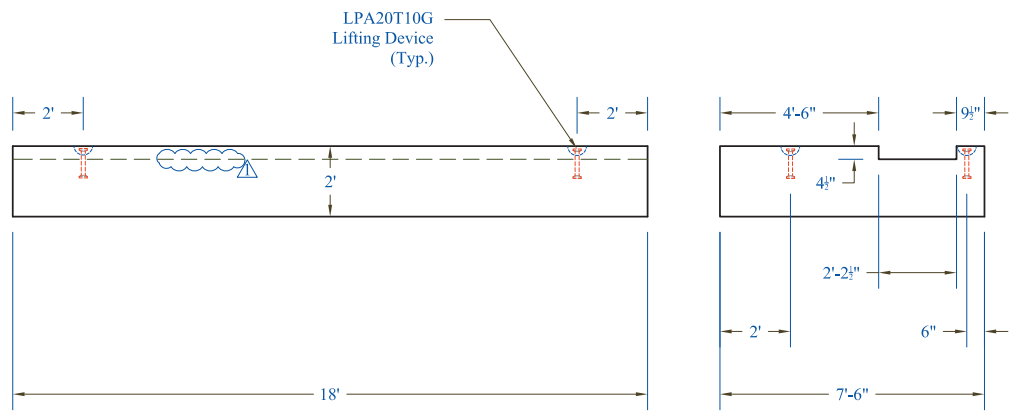

Vermont Agency of Transportation
RECEIVED
Abutment Submittal 2 011215_Markup.pdf

CK'D BY CLB OK'D BY DRP

January 13, 2015

RESUBMIT NO Approved AsNoted

BY C. CARLSON DATE 01/15/15

Review

PRECAST CONCRETE ABUTMENT SHOP DRAWINGS (SDI JOB #15163)			
SUPERVISOR: M. WHEELER DETAILER: I. ADAMS CHECKER: E. Barendse ENGINEER:	PROJECT NAME: Stowe BRF 0235 (II) PROJECT #: 0235 (II) LOCATION: Stowe, VT	INSTALLER: CCS Construction 138 Munson Ave Morrisville, VT 05661 PH: 802-888-7701	FABRICATOR: 193 INDUSTRIAL AVE. WILLISTON, VT 05495 Ph: (802) 658-0201
		01/08/15	Retaining Wall Details

SD Ireland Precast Division

Tension Duct Bearing Plate

* See post tensioning note 1 on pg 1

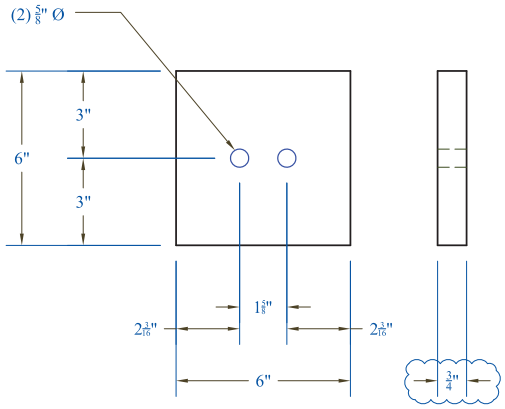

Reinforcement Detail at Tensioning Blockouts

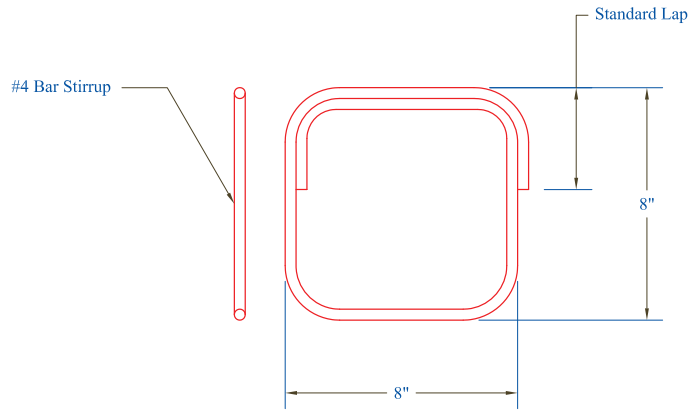

0.5" Barrel Chuck

* See post tensioning note 1 on pg 1

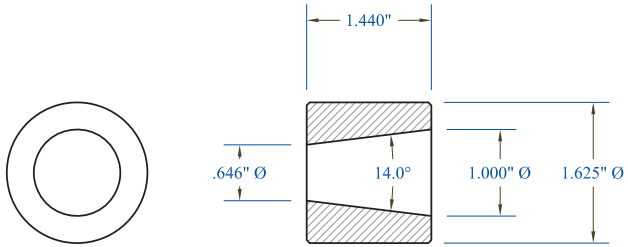

0.5" 2-Part Wedge

* See post tensioning note 1 on pg 1

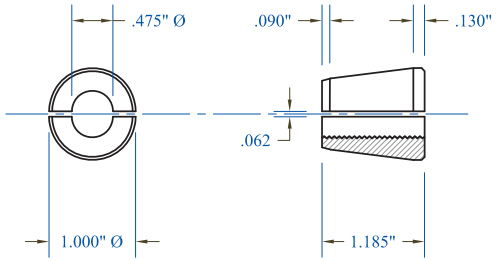

Vermont Agency of Transportation

RECEIVED

Abutment Submittal 2 011215_Markup.pdf

CK'D BY CLB OK'D BY DRP

January 13, 2015

RESUBMIT NO Approved

BY C. CARLSON DATE 01/15/15

w

PRECAST CONCRETE ABUTMENT SHOP DRAWINGS (SDI JOB #15163)		INSTALLER:	FABRICATOR:
SUPERVISOR: M. WHEELER DETAILER: I. ADAMS CHECKER: E. Barendse ENGINEER:	PROJECT NAME: Stowe BRF 0235 (II) PROJECT #: 0235 (II) LOCATION: Stowe, VT	CCS Construction 138 Munson Ave Morrisville, VT 05661 PH: 802-888-7701	193 INDUSTRIAL AVE. WILLISTON, VT 05495 Ph: (802) 658-0201
		01/08/15	Post Tensioning

SD Ireland Precast Division

Tensioning Blockout Plan

* See post tensioning notes 1 & 6 on pg 1 ⚠

Vermont Agency of Transportation

RECEIVED

Abutment Submittal 2 011215_Markup.pdf

CK'D BY CLB OK'D BY DRP

January 13, 2015

RESUBMIT NO Approved

BY C. CARLSON DATE 01/15/15

Tensioning Blockout Section

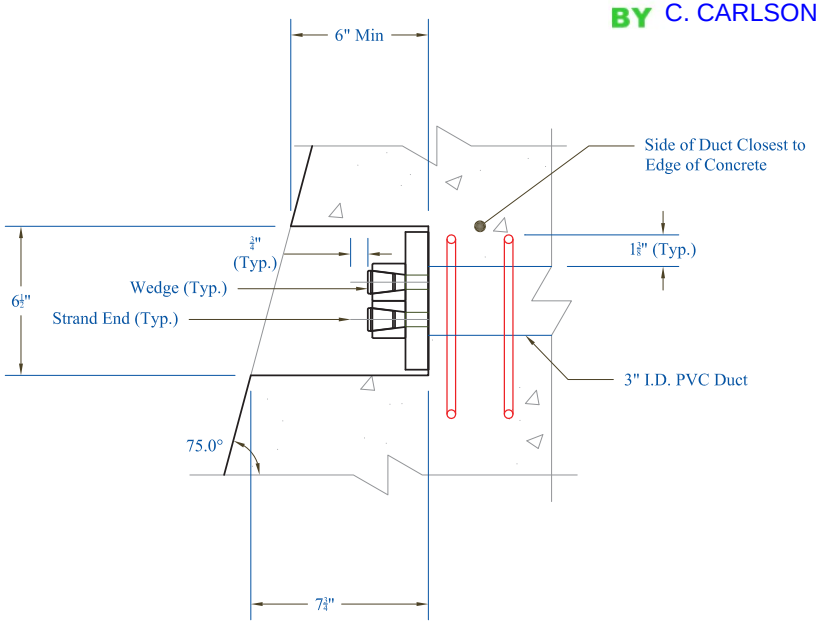

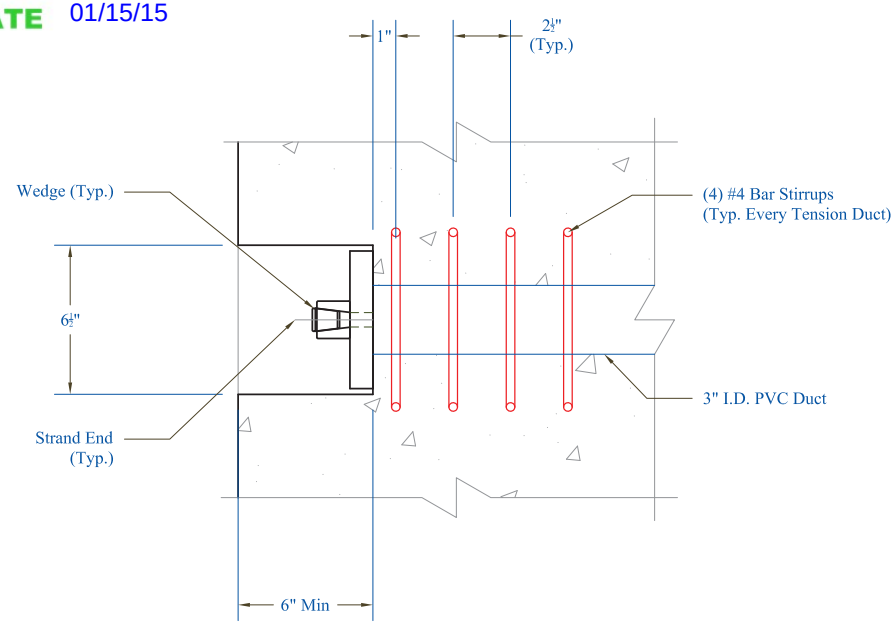

CONTRACTORS VTSPE:

⚠ - Rev. 1 - 01/ 08 /15 - Changes per VTrans Review

PRECAST CONCRETE ABUTMENT SHOP DRAWINGS (SDI JOB #15163)

SUPERVISOR: M. WHEELER
DETAILER: I. ADAMS
CHECKER: E. Barendse
ENGINEER:

PROJECT NAME: Stowe BRF 0235 (II)
PROJECT #: 0235 (II)
LOCATION: Stowe, VT

INSTALLER:
CCS Construction
138 Munson Ave
Morrisville, VT 05661
PH: 802-888-7701

FABRICATOR:
193 INDUSTRIAL AVE.
WILLISTON, VT 05495
Ph: (802) 658-0201

SD Ireland Precast Division

01/08/15 | Post Tensioning | 9 of 11

End Bar Detail: Abutment 1

(Reference Dimension Fabricators Drawing C
for Bar Size, Type, and Schedule)

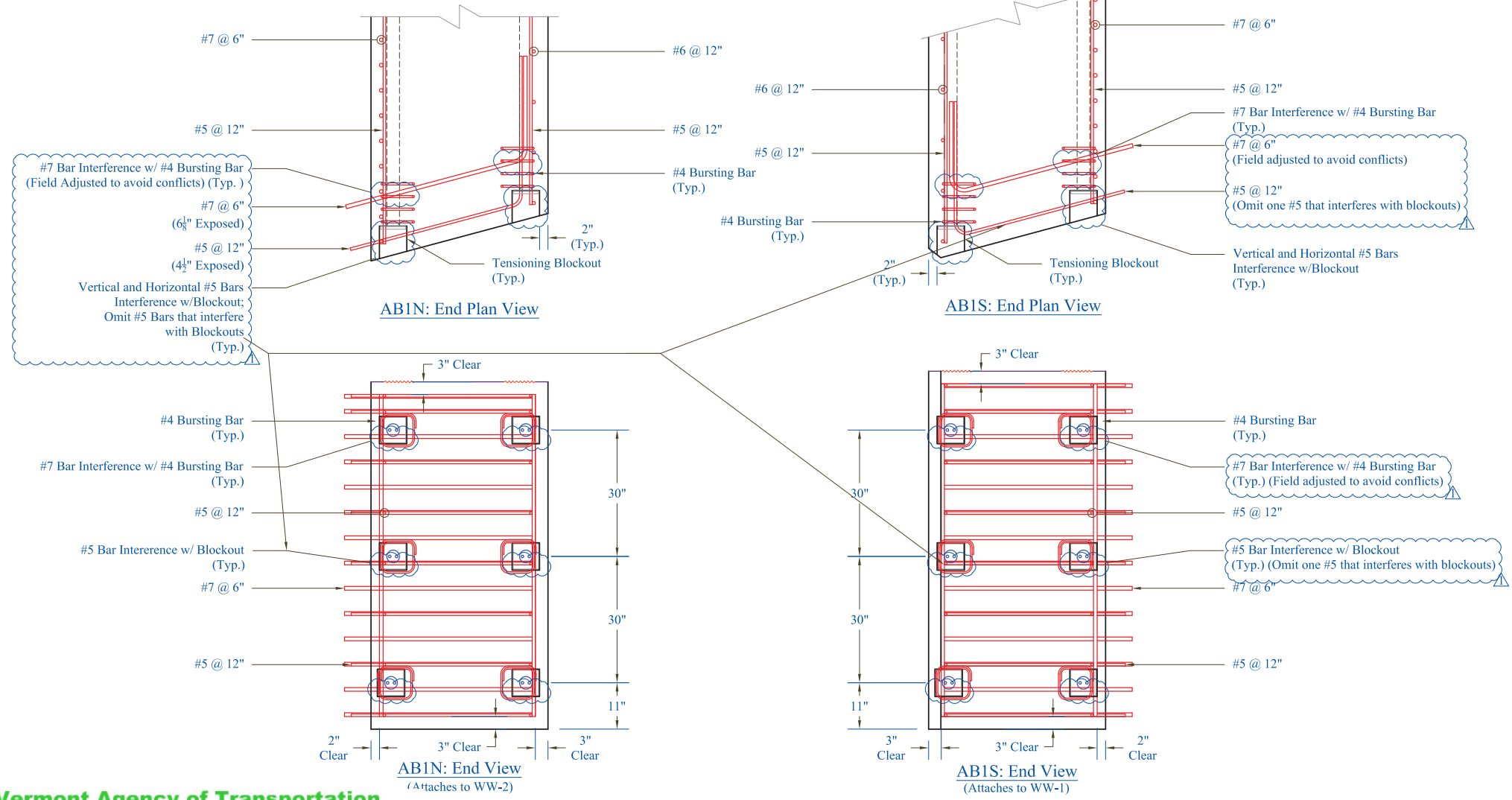

Vermont Agency of Transportation
RECEIVED
Abutment Submittal 2 011215_Markup.pdf

CK'D BY CLB OK'D BY DRP

January 13, 2015

RESUBMIT NO Approved

BY C. CARLSON DATE 01/15/15

PRECAST CONCRETE ABUTMENT SHOP DRAWINGS (SDI JOB #15163)		INSTALLER: CCS Construction 138 Munson Ave Morrisville, VT 05661 PH: 802-888-7701	FABRICATOR: 193 INDUSTRIAL AVE. WILLISTON, VT 05495 Ph: (802) 658-0201 SD Ireland Precast Division
SUPERVISOR: M. WHEELER DETAILER: I. ADAMS CHECKER: E. Barendse ENGINEER:	PROJECT NAME: Stowe BRF 0235 (II) PROJECT #: 0235 (II) LOCATION: Stowe, VT	01/08/15	End Bar Detail Abmt.1 — 10 of 11

End Bar Detail: Abutment 2

(Reference Dimension Fabricators Drawing D
for Bar Size, Type, and Schedule)

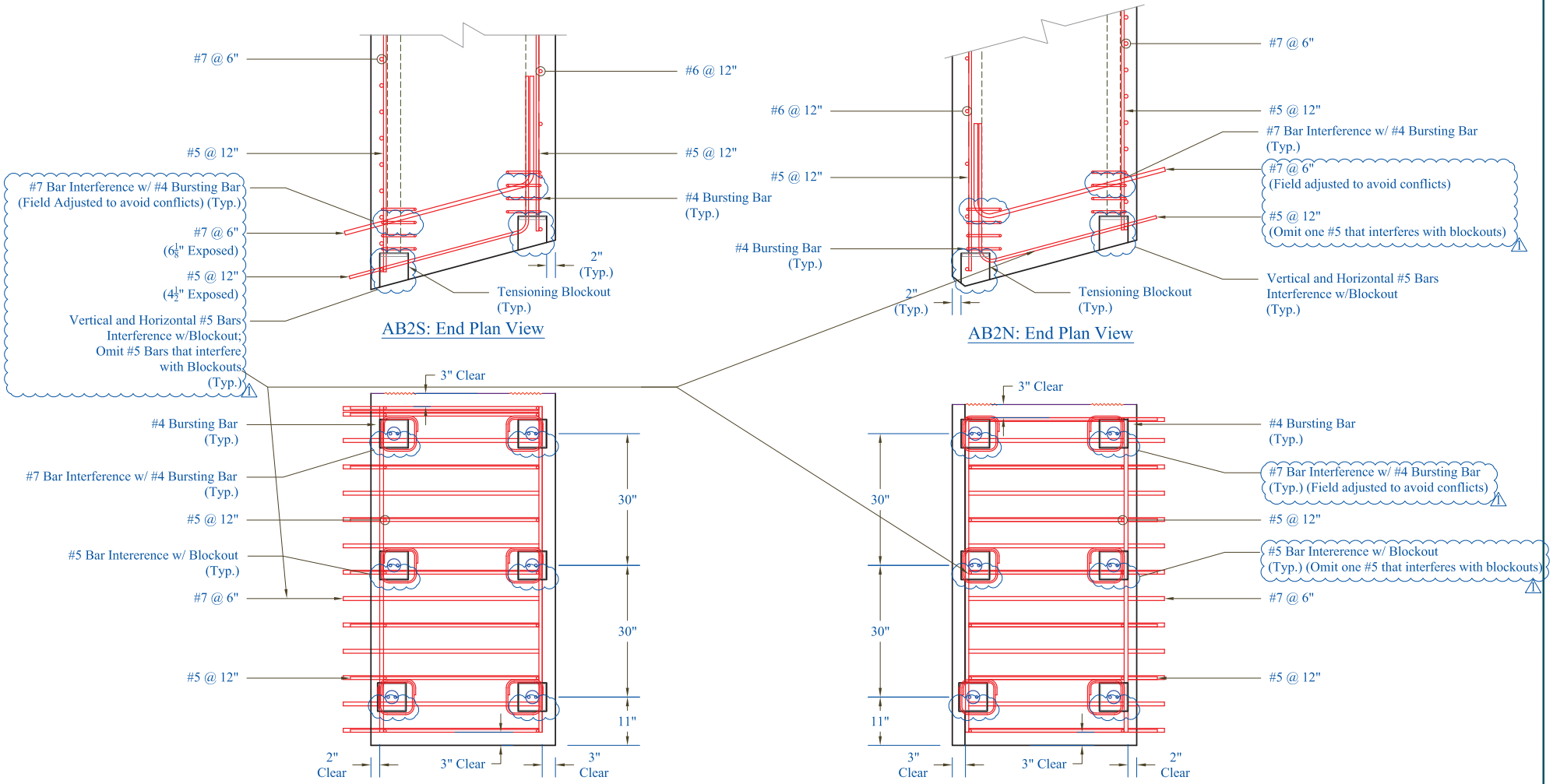

PRECAST CONCRETE ABUTMENT SHOP DRAWINGS (SDI JOB #15163)		INSTALLER: CCS Construction 138 Munson Ave Morrisville, VT 05661 PH: 802-888-7701	FABRICATOR: 193 INDUSTRIAL AVE. WILLISTON, VT 05495 Ph: (802) 658-0201 SD Ireland Precast Division
SUPERVISOR: M. WHEELER DETAILER: I. ADAMS CHECKER: E. Barendse ENGINEER:	PROJECT NAME: Stowe BRF 0235 (II) PROJECT #: 0235 (II) LOCATION: Stowe, VT	01/08/15	End Bar Detail Abmt.2 — 11 of 11

Vermont Agency of Transportation
RECEIVED
Abutment Submittal 2 011215_Markup.pdf

CK'D BY CLB OK'D BY DRP

January 13, 2015

RESUBMIT NO Approved

BY C. CARLSON DATE 01/15/15

The vertical bars coming out of the abutments will either be spaced to avoid interference with the girders or cut where they interfere.

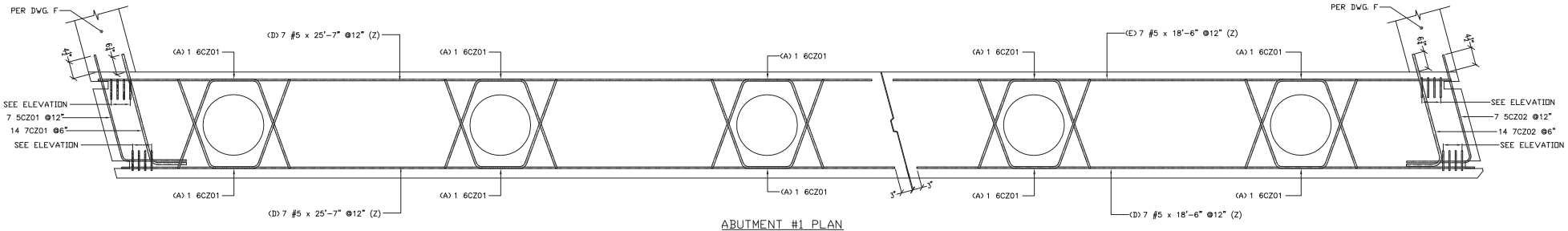

ABUTMENT #1 PLAN
VERTICALS NOT SHOW FOR CLARITY

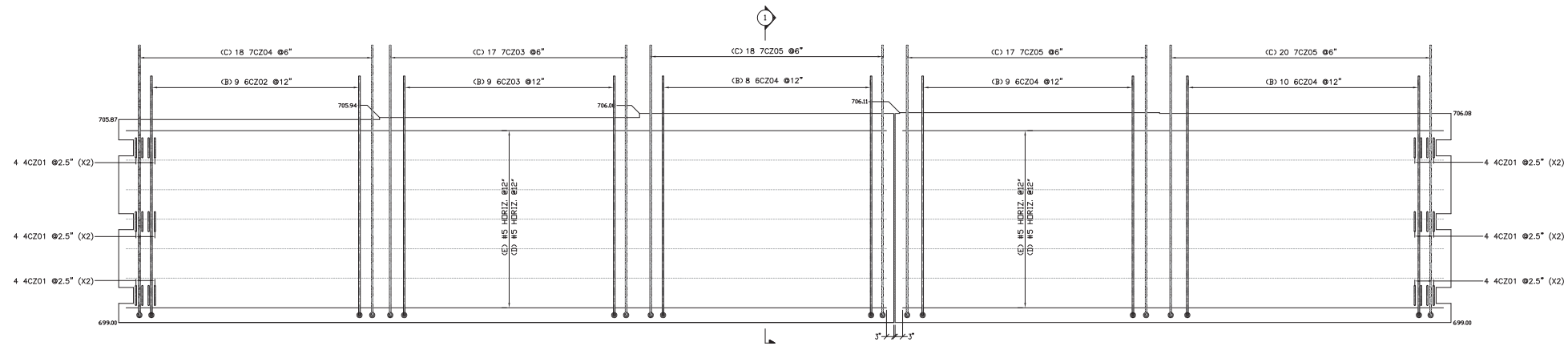

ABUTMENT #1 ELEVATION
PILES, PILE CAVITIES AND POST TENSIONING DUCKS NOT SHOWN FOR CLARITY

FOR APPROVAL

(2) 5'-0" LONG SAMPLE BARS WILL BE PROVIDED FOR EACH BAR SIZE

ALL DUAL COATED REINF. DENOTED (Z)

ELEVATIONS & DIMENSIONS SHOWN ON THIS DWG. ARE FOR REINF. DETAILING PURPOSES ONLY AND ARE NOT INTENDED FOR CONSTRUCTION.

REINF. BARS ASTM A615 GRADE 60 DUAL COATED

VERIFICATION OF UNCLEAR INFORMATION MAY BE REQUESTED ON THIS DRAWING. SHOULD VERIFICATION BE LEFT UN-ADDRESSED IT WILL REMAIN AS SHOWN AND ASSUME TO BE CORRECT.

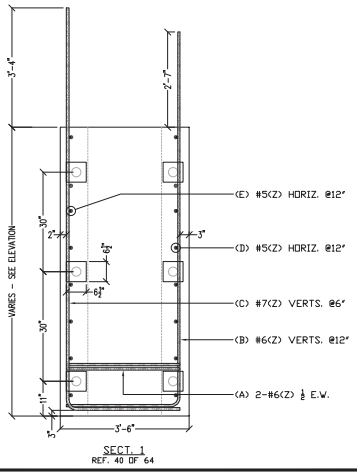

SECT. 1
REF. 40 OF 64

Release Number: 003

BAR LIST

Bar Mark	Qty	Size	Total Length	Type	'A'	'B'	'C'	'D'	'E'	'F'	'G'	'H'	'J'	'K'	'O'	'R'
	14	#5	25'-7"			25'-7"										
	14	#5	18'-6"			18'-6"										
4CZ01	48	#4	4'-8"	L9	0'-4 ½"	0'-8"	0'-8"	0'-8"	0'-8"	0'-8"	0'-4 ½"					
5CZ01	7	#5	6'-11 ½"	3		3'-7 ½"	3 3'-4"					3'-2 ½"		0'-10 ¼"	4'-5 ¾"	
5CZ02	7	#5	6'-11 ½"	21			3'-7 ½"	3 3'-4"				3'-2 ½"		0'-10 ¼"		
6CZ01	10	#6	7'-9 ½"	3			3'-1 ¼"	1'-7"	3'-1 ¼"			2'-11"		1'-0 ¾"	3'-9 ¾"	
6CZ02	9	#6	12'-3"	17		3'-1"	9'-2"									
6CZ03	9	#6	12'-4"	17		3'-1"	9'-3"									
6CZ04	27	#6	12'-6"	17		3'-1"	9'-5"									
7CZ01	14	#7	4'-11 ¼"	3		3'-9 ¼"	1'-2"					1'-1 ½"		0'-3 ½"	4'-0 ¾"	
7CZ02	14	#7	4'-11 ¼"	21			3'-9"	1'-2 ¾"				1'-2 ½"		0'-2 ¾"		
7CZ03	17	#7	13'-1"	17		3'-1"	10'-0"									
7CZ04	18	#7	12'-11"	17		3'-1"	9'-10"									
7CZ05	55	#7	13'-3"	17		3'-1"	10'-2"									

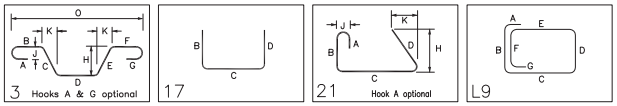

LEGEND:
CONT.-CONTINUOUS
TRANS.-TRANSVERSE
DWLS.-DOWELS
VERTS.-VERTICAL
HORIZ.-HORIZONTAL
T&B -TOP & BOTTOM
I.F.-INNER FACE
O.F.-OUTER FACE
E.E.-EACH END
E.F.-EACH FACE
F.F.-FRONT FACE
R.F.-REAR FACE
E.W.-EACH WAY
D.C.-ON CENTER
L.W.-LONG WAY
S.W.-SHORT WAY

6			
5			
4			
3	01-12-15	2	REVISE/ENG. COM/FOR APPROVAL
2	12-05-14		REVISE/SDI COM/FOR APPROVAL
1	12-03-14		FOR APPROVAL
	DATE	REV.#	SENT FOR

DIMENSION
DIMENSION FABRICATORS INC.
2000 7TH STREET
BOSTON, M.A. 12302
PH: (508) 374-1938
FAX (508) 374-4630
www.dimensionfabricators.com

STRUCTURE: VTAOT STOWE BRF 0235(11)
LOCATION: WILLINSTON, VT
ARCHITECT:
ENGINEER:
CUSTOMER: SD IRELAND CONCRETE CONST. CORP.
DRAWN BY: ED
DATE: 12/3/14
DFF #: 9117
DRAWING COVERS: ABUTMENT #1 DUAL COATED REINFORCING
DRAWING #: C

Vermont Agency of Transportation
RECEIVED
Abutment Submittal 2-15-1215_Marked.pdf

CK'D BY CLB OK'D BY DRP

January 13, 2015

RESUBMIT NO Approved AsNoted
BY C. CARLSON DATE 01/15/15

The vertical bars coming out of the abutments will either be spaced to avoid interference with the girders or cut where they interfere.

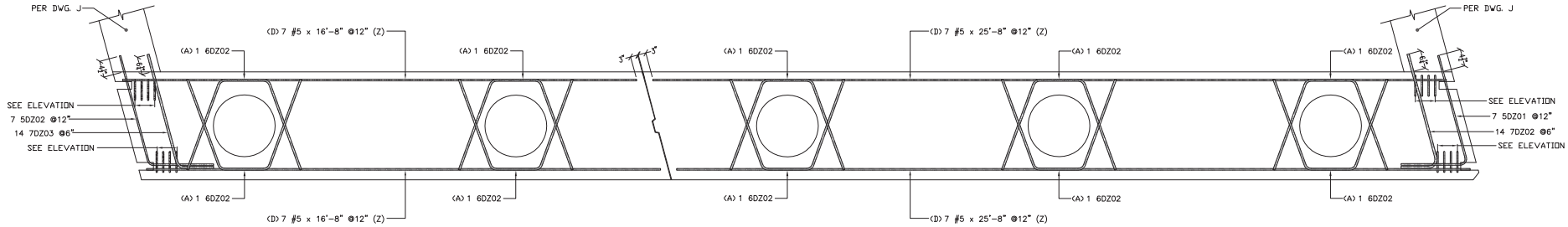

ABUTMENT #2 PLAN
VERTICALS NOT SHOW FOR CLARITY

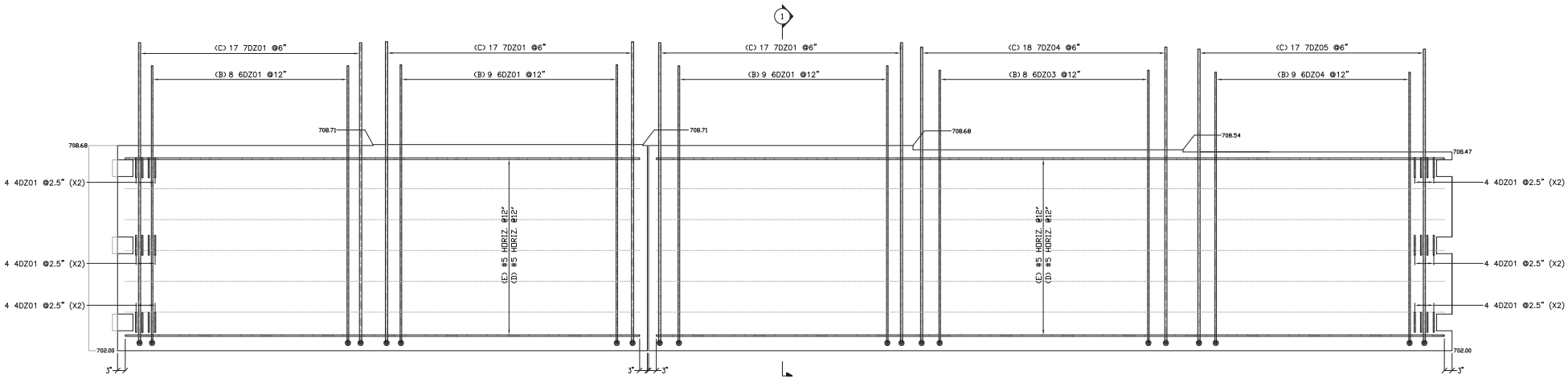

ABUTMENT #2 ELEVATION
PILES, PILE CAVITIES AND POST TENSIONING
DUCKS NOT SHOWN FOR CLARITY

FOR APPROVAL

ALL DUAL COATED REINF. DENOTED (Z)

ELEVATIONS & DIMENSIONS SHOWN ON THIS DWG. ARE FOR REINF. DETAILING PURPOSES ONLY AND ARE NOT INTENDED FOR CONSTRUCTION.

REINF. BARS ASTM A615 GRADE 60 DUAL COATED

VERIFICATION OF UNCLEAR INFORMATION MAY BE REQUESTED ON THIS DRAWING. SHOULD VERIFICATION BE LEFT UN-ADDRESSED IT WILL REMAIN AS SHOWN AND ASSUME TO BE CORRECT.

⚠ (2) 5'-0" LONG SAMPLE BARS WILL BE PROVIDED FOR EACH BAR SIZE

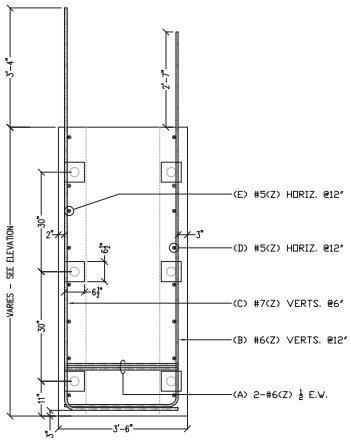

SECT 1
REF. 40 OF 64

Release Number: 004

BAR LIST

Bar Mark	Qty	Size	Total Length	Type	'A'	'B'	'C'	'D'	'E'	'F'	'G'	'H'	'J'	'K'	'O'	'R'
	14	#5	16'-8"			16'-8"										
	14	#5	25'-8"			25'-8"										
4DZ01	48	#4	4'-8"	L9	0'-4 ½"	0'-8"	0'-8"	0'-8"	0'-8"	0'-8"	0'-4 ½"					
5DZ01	7	#5	6'-11 ½"	21			3'-7 ½"	⚠ 3'-4"				3'-2 ½"		0'-10 ¼"		
5DZ02	7	#5	6'-11 ½"	3		3'-7 ½"	⚠ 3'-4"					3'-2 ½"		0'-10 ¼"	4'-5 ¾"	
6DZ01	26	#6	12'-1"	17		3'-1"	9'-0"									
6DZ02	10	#6	7'-9 ½"	3			3'-1 ¼"	1'-7"	3'-1 ¼"			2'-11"		1'-0 ¾"	3'-9 ¾"	
6DZ03	8	#6	11'-11"	17		3'-1"	8'-10"									
6DZ04	9	#6	11'-10"	17		3'-1"	8'-9"									
7DZ01	51	#7	12'-10"	17		3'-1"	9'-9"									
7DZ02	14	#7	4'-11 ¾"	21			3'-9"	1'-2 ¾"				1'-2 ½"		0'-2 ¾"		
7DZ03	14	#7	4'-11 ¼"	3		3'-9 ¼"	1'-2"					1'-1 ½"		0'-3 ½"	4'-0 ¾"	
7DZ04	18	#7	12'-8"	17		3'-1"	9'-7"									
7DZ05	17	#7	12'-7"	17		3'-1"	9'-6"									

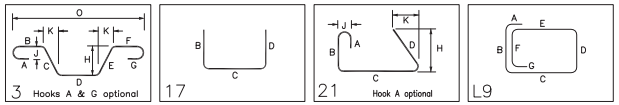

LEGEND:
CONT.-CONTINUOUS
TRANS.-TRANSVERSE
DWLS.-DOWELS
VERTS.-VERTICAL
HORIZ.-HORIZONTAL
T&B -TOP & BOTTOM
I.F.-INNER FACE
O.F.-OUTER FACE
E.E.-EACH END
E.F.-EACH FACE
F.F.-FRONT FACE
R.F.-REAR FACE
E.W.-EACH WAY
O.C.-ON CENTER
L.W.-LONG WAY
S.W.-SHORT WAY

REV.	DATE	REV.#	SENT FOR
6			
5			
4			
3			
2	01-12-15	⚠	REVISED/ENG COM/FOR APPROVAL
1	12-04-14		FOR APPROVAL

DIMENSION
DIMENSION FABRICATORS INC.
2000 7TH STREET
BOTTA, N.Y. 12302
PH. (518) 374-1938
FAX (518) 374-4630
www.dimensionfabricators.com

STRUCTURE: VTAOT STOWE BRF 0235(11)
LOCATION:
ARCHITECT:
ENGINEER:
CUSTOMER: SD IRELAND CONCRETE CONST. CORP.
DRAWN BY: ED
DATE: 12/4/14
DFI #: 9117
DRAWING COVERS: ABUTMENT #2 DUAL COATED REINFORCING
DRAWING #: D

Vermont Agency of Transportation
RECEIVED
Abutment Submittal 2-13-1258_Markup.pdf

CK'D BY CLB OK'D BY DRP

January 13, 2015

RESUBMIT NO Approved AsNoted
BY C. CARLSON DATE 01/15/15

Release Number:

BAR LIST

Bar Mark	Qty	Size	Total Length	Type	'A'	'B'	'C'	'D'	'E'	'F'	'G'	'H'	'J'	'K'	'O'	'R'
	7	#5	5'-5"			5'-5"										
	1	#5	8'-7"			8'-7"										
5FZ01	34	#5	2'-0"	T11	0'-5 ½"	1'-1"					0'-5 ½"					
5FZ02	12	#5	9'-5 ½"	21			9'-0"	0'-5 ½"				0'-4"		0'-3 ¾"		
5FZ03a	1	#5	2'-8"			2'-8"										
5FZ03b	1	#5	3'-11"			3'-11"										
5FZ03c	1	#5	5'-3"			5'-3"										
5FZ03d	1	#5	6'-6"			6'-6"										
5FZ03e	1	#5	7'-10"			7'-10"										
5FZ04	4	#5	9'-3 ½"	21			8'-10"	0'-5 ½"				0'-4"		0'-3 ¾"		
5FZ05	1	#5	10'-7"	3		9'-2"	1'-5"					0'-10 ½"		1'-1 ¼"	10'-3 ¾"	
5FZ06a	2	#5	3'-9 ½"	21			3'-4"	0'-5 ½"				0'-4"		0'-3 ¾"		
5FZ06b	2	#5	4'-5 ½"	21			4'-0"	0'-5 ½"				0'-4"		0'-3 ¾"		
5FZ06c	2	#5	5'-1 ½"	21			4'-8"	0'-5 ½"				0'-4"		0'-3 ¾"		
5FZ06d	2	#5	5'-9 ½"	21			5'-4"	0'-5 ½"				0'-4"		0'-3 ¾"		
5FZ06e	2	#5	6'-5 ½"	21			6'-0"	0'-5 ½"				0'-4"		0'-3 ¾"		
5FZ06f	2	#5	7'-1 ½"	21			6'-8"	0'-5 ½"				0'-4"		0'-3 ¾"		
5FZ06g	2	#5	7'-9 ½"	21			7'-4"	0'-5 ½"				0'-4"		0'-3 ¾"		
5FZ06h	2	#5	8'-5 ½"	21			8'-0"	0'-5 ½"				0'-4"		0'-3 ¾"		
	14	#7	5'-0"			5'-0"										
	2	#7	8'-8"			8'-8"										
7FZ01a	1	#7	2'-0"			2'-0"										
7FZ01b	1	#7	2'-7"			2'-7"										
7FZ01c	1	#7	3'-3"			3'-3"										
7FZ01d	1	#7	3'-10"			3'-10"										
7FZ01e	1	#7	4'-6"			4'-6"										
7FZ01f	1	#7	5'-2"			5'-2"										
7FZ01g	1	#7	5'-9"			5'-9"										
7FZ01h	1	#7	6'-5"			6'-5"										
7FZ01i	1	#7	7'-0"			7'-0"										
7FZ01j	1	#7	7'-8"			7'-8"										
7FZ01k	1	#7	8'-4"			8'-4"										
7FZ02	1	#7	10'-8"	3		9'-5"	1'-3"					0'-9 ¼"		0'-11 ¾"	10'-4 ¾"	

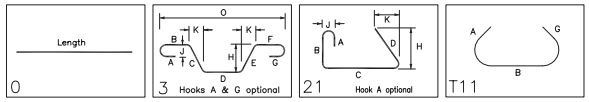

⚠ *BAR MARKS MAY CHANGE DUE TO REVISIONS

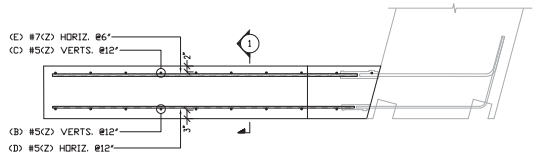

WINGWALL #2 PLAN

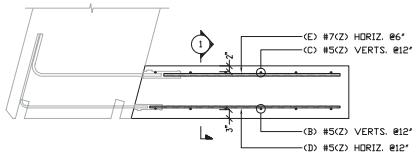

WINGWALL #1 PLAN

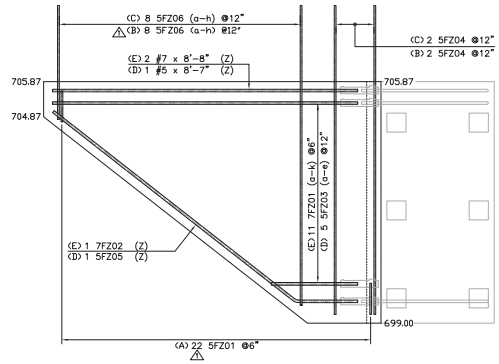

WINGWALL #2 ELEVATION

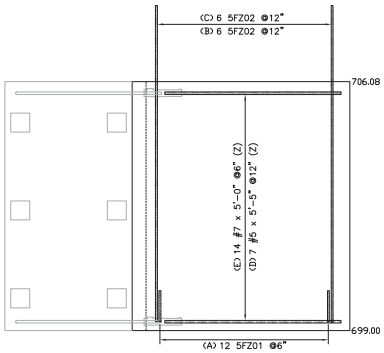

WINGWALL #1 ELEVATION

⚠ (2) 5'-0" LONG SAMPLE BARS WILL BE PROVIDED FOR EACH BAR SIZE

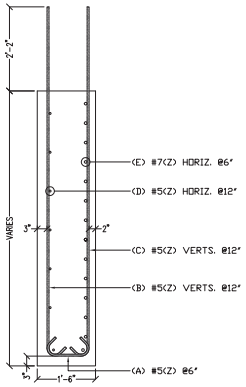

SECT. 1
REF. 42 OF 64

ALL DUAL COATED REINF. DENOTED (Z)

ELEVATIONS & DIMENSIONS SHOWN ON THIS DWG. ARE FOR REINF. DETAILING PURPOSES ONLY AND ARE NOT INTENDED FOR CONSTRUCTION.

REINF. BARS ASTM A615 GRADE 60 DUAL COATED

VERIFICATION OF UNCLEAR INFORMATION MAY BE REQUESTED ON THIS DRAWING. SHOULD VERIFICATION BE LEFT UN-ADDRESSED IT WILL REMAIN AS SHOWN AND ASSUME TO BE CORRECT.

FOR APPROVAL

LEGEND:
CONT.-CONTINUOUS
TRANS.-TRANSVERSE
DWL.S.-DOWELS
VERTS.-VERTICAL
HORIZ.-HORIZONTAL
T&B -TOP & BOTTOM
I.F.-INNER FACE
O.F.-OUTER FACE
E.E.-EACH END
E.F.-EACH FACE
F.F.-FRONT FACE
R.F.-REAR FACE
E.W.-EACH WAY
O.C.-ON CENTER
L.W.-LONG WAY
S.W.-SHORT WAY

DATE	REV.#	SENT FOR
6		
5		
4		
3		
2	01-12-15	⚠ REVISED/SDX COM/FOR APPROVAL
1	12-05-14	FOR APPROVAL

DIMENSION
DIMENSION FABRICATORS INC.
2000 7TH STREET
SCOTIA, N.Y. 12302
PH. (518) 374-1836
FAX (518) 374-1820
www.dimensionfabricators.com

STRUCTURE: VTAOT STOWE BRF 0235(11)
LOCATION:
ARCHITECT:
ENGINEER:
CUSTOMER: SD IRELAND CONCRETE CONST. CORP.
DRAWN BY: ED
DATE: 12/5/14
DFI #: 9117
DRAWING COVERS: WINGWALLS 1 & 2 DUAL COATED REINFORCING
DRAWING #: F

Vermont Agency of Transportation
RECEIVED
Abutment Submittal 2 011215_Markup.pdf

CK'D BY CLB OK'D BY DRP

January 13, 2015

RESUBMIT NO Approved

BY C. CARSLON DATE 01/15/15

Drawing Sheet : J

△ BAR LIST

Bar Mark	Qty	Size	Total Length	Type	'A'	'B'	'C'	'D'	'E'	'F'	'G'	'H'	'J'	'K'	'O'	'R'
	2	#7	8'-8"			8'-8"										
	2	#7	8'-8"			8'-8"										
	1	#5	8'-7"			8'-7"										
	1	#5	8'-7"			8'-7"										
5JZ01	△43	#5	2'-0"	T11	0'-5 ½"	1'-1"					0'-5 ½"					
5JZ02	1	#5	10'-5"	3		9'-1"	1'-4"					0'-9 ¾"		1'-0 ½"	10'-1 ½"	
5JZ03	4	#5	9'-0 ½"	21			8'-7"	0'-5 ½"				0'-4"		0'-3 ¾"		
5JZ04a	1	#5	2'-8"			2'-8"										
5JZ04b	1	#5	4'-0"			4'-0"										
5JZ04c	1	#5	5'-4"			5'-4"										
5JZ04d	1	#5	6'-8"			6'-8"										
5JZ04e	1	#5	8'-0"			8'-0"										
5JZ05a	2	#5	3'-6 ½"	21			3'-1"	0'-5 ½"				0'-4"		0'-3 ¾"		
5JZ05b	2	#5	4'-3 ½"	21			3'-10"	0'-5 ½"				0'-4"		0'-3 ¾"		
5JZ05c	2	#5	5'-0 ½"	21			4'-7"	0'-5 ½"				0'-4"		0'-3 ¾"		
5JZ05d	2	#5	5'-9 ½"	21			5'-4"	0'-5 ½"				0'-4"		0'-3 ¾"		
5JZ05e	2	#5	6'-6 ½"	21			6'-1"	0'-5 ½"				0'-4"		0'-3 ¾"		
5JZ05f	2	#5	7'-3 ½"	21			6'-10"	0'-5 ½"				0'-4"		0'-3 ¾"		
5JZ05g	2	#5	8'-0 ½"	21			7'-7"	0'-5 ½"				0'-4"		0'-3 ¾"		
5JZ05h	2	#5	8'-9 ½"	21			8'-4"	0'-5 ½"				0'-4"		0'-3 ¾"		
5JZ06a	1	#5	3'-2"			3'-2"										
5JZ06b	1	#5	4'-5"			4'-5"										
5JZ06c	1	#5	5'-8"			5'-8"										
5JZ06d	1	#5	6'-11"			6'-11"										
5JZ06e	1	#5	8'-2"			8'-2"										
5JZ07	1	#5	10'-6"	3		8'-7"	1'-11"					1'-2 ½"		1'-5 ¾"	10'-0 ¾"	
5JZ08	4	#5	8'-10 ½"	21			8'-5"	0'-5 ½"				0'-4"		0'-3 ¾"		
5JZ09a	2	#5	3'-6 ½"	21			3'-1"	0'-5 ½"				0'-4"		0'-3 ¾"		
5JZ09b	2	#5	4'-2 ½"	21			3'-9 ½"	0'-5 ½"				0'-4"		0'-3 ¾"		
5JZ09c	2	#5	4'-11"	21			4'-5 ½"	0'-5 ½"				0'-4"		0'-3 ¾"		
5JZ09d	2	#5	5'-7 ½"	21			5'-1 ¾"	0'-5 ½"				0'-4"		0'-3 ¾"		
5JZ09e	2	#5	6'-3 ½"	21			5'-10"	0'-5 ½"				0'-4"		0'-3 ¾"		
5JZ09f	2	#5	6'-11 ½"	21			6'-6 ½"	0'-5 ½"				0'-4"		0'-3 ¾"		
5JZ09g	2	#5	7'-8"	21			7'-2 ½"	0'-5 ½"				0'-4"		0'-3 ¾"		
5JZ09h	2	#5	8'-4 ½"	21			7'-11"	0'-5 ½"				0'-4"		0'-3 ¾"		
7JZ01	1	#7	10'-6"	3		9'-1"	1'-5"					0'-10 ½"		1'-1 ½"	10'-2 ½"	

Drawing Sheet : J

BAR LIST

Bar Mark	Qty	Size	Total Length	Type	'A'	'B'	'C'	'D'	'E'	'F'	'G'	'H'	'J'	'K'	'O'	'R'
7JZ02a	1	#7	2'-1"			2'-1"										
7JZ02b	1	#7	2'-9"			2'-9"										
7JZ02c	1	#7	3'-5"			3'-5"										
7JZ02d	1	#7	4'-1"			4'-1"										
7JZ02e	1	#7	4'-9"			4'-9"										
7JZ02f	1	#7	5'-5"			5'-5"										
7JZ02g	1	#7	6'-1"			6'-1"										
7JZ02h	1	#7	6'-9"			6'-9"										
7JZ02i	1	#7	7'-5"			7'-5"										
7JZ02j	1	#7	8'-1"			8'-1"										
7JZ03a	1	#7	2'-7"			2'-7"										
7JZ03b	1	#7	3'-2"			3'-2"										
7JZ03c	1	#7	3'-10"			3'-10"										
7JZ03d	1	#7	4'-5"			4'-5"										
7JZ03e	1	#7	5'-1"			5'-1"										
7JZ03f	1	#7	5'-8"			5'-8"										
7JZ03g	1	#7	6'-4"			6'-4"										
7JZ03h	1	#7	6'-11"			6'-11"										
7JZ03i	1	#7	7'-7"			7'-7"										
7JZ03j	1	#7	8'-3"			8'-3"										
7JZ04	1	#7	10'-7"	3		8'-7"	2'-0"					1'-3"		1'-6 ½"	10'-1 ½"	

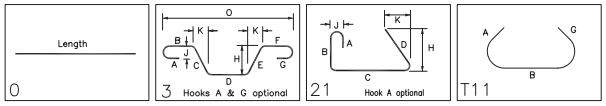

△ ※BAR MARKS MAY CHANGE DUE TO REVISIONS

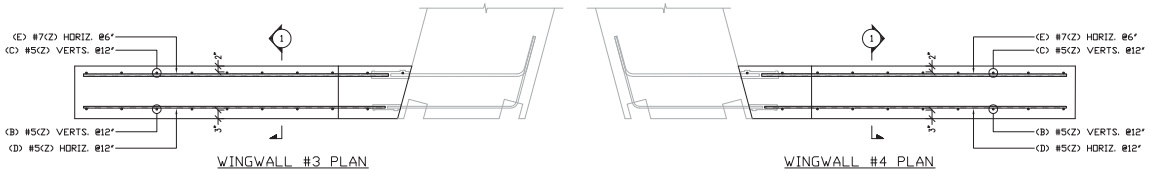

WINGWALL #3 PLAN

WINGWALL #4 PLAN

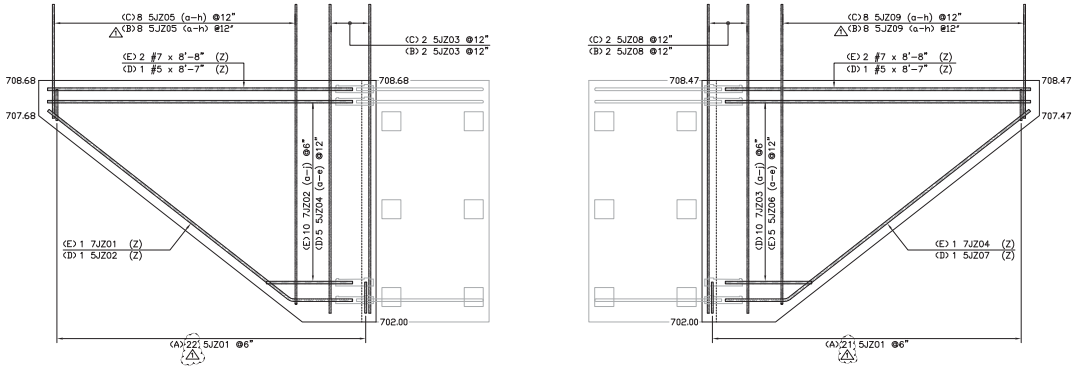

WINGWALL #3 ELEVATION

WINGWALL #4 ELEVATION

△ (2) 5'-0" LONG SAMPLE BARS WILL BE PROVIDED FOR EACH BAR SIZE

ALL DUAL COATED REINF. DENOTED (Z)

ELEVATIONS & DIMENSIONS SHOWN ON THIS DWG. ARE FOR REINF. DETAILING PURPOSES ONLY AND ARE NOT INTENDED FOR CONSTRUCTION.

REINF. BARS ASTM A615 GRADE 60 DUAL COATED

VERIFICATION OF UNCLEAR INFORMATION MAY BE REQUESTED ON THIS DRAWING. SHOULD VERIFICATION BE LEFT UN-ADDRESSED IT WILL REMAIN AS SHOWN AND ASSUME TO BE CORRECT.

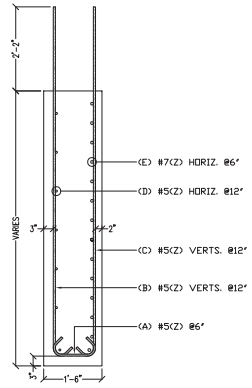

SECT. 1
REF. 42 OF 64

FOR APPROVAL

LEGEND:
CONT.-CONTINUOUS
TRANS.-TRANSVERSE
DWLS.-DOWELS
VERTS.-VERTICAL
HORIZ.-HORIZONTAL
T&B -TOP & BOTTOM
I.F.-INNER FACE
O.F.-OUTER FACE
E.E.-EACH END
E.F.-EACH FACE
F.F.-FRONT FACE
R.F.-REAR FACE
E.W.-EACH WAY
O.C.-ON CENTER
L.W.-LONG WAY
S.W.-SHORT WAY

6			
5			
4			
3			
2	1/12/15	△	REVISED/SDX COM/FOR APPROVAL
1	12-05-14		FOR APPROVAL
	DATE	REV.#	SENT FOR

DIMENSION
DIMENSION FABRICATORS INC.
2000 7TH STREET
SCOTIA, N.Y. 12302
PH. (518) 374-1836
FAX (518) 374-1820
www.dimensionfabricators.com

STRUCTURE: VTAOT STOWE BRF 0235(11)
LOCATION:
ARCHITECT:
ENGINEER:
CUSTOMER: SD IRELAND CONCRETE CONST. CORP.
DRAWN BY: ED
DATE: 12/5/14
DFI #: 9117
DRAWING COVERS: WINGWALLS 3 & 4 DUAL COATED REINFORCING
DRAWING #: J

Vermont Agency of Transportation

RECEIVED

Abutment Submittal 2 011215_Markup.pdf

CK'D BY CLB OK'D BY DRP

January 13, 2015

RESUBMIT NO Approved

BY C. CARSLON DATE 01/15/15

Drawing Sheet : K					BAR LIST											
Bar Mark	Qty	Size	Total Length	Type	'A'	'B'	'C'	'D'	'E'	'F'	'G'	'H'	'J'	'K'	'O'	'R'
4KZ01	8	#4	6'-6 ½"	25		1'-6"	1'-0 ¼"	1'-6"	1'-0 ¼"	1'-6"		1'-0"		0'-6"		
	30	#5	17'-6"			17'-6"										
	38	#5	7'-0"			7'-0"										
	38	#5	6'-4"			6'-4"										
5KZ01	38	#5	2'-10"	17		0'-10"	2'-0"									
5KZ02	19	#5	5'-4"	17		2'-2"	1'-0"	2'-2"								

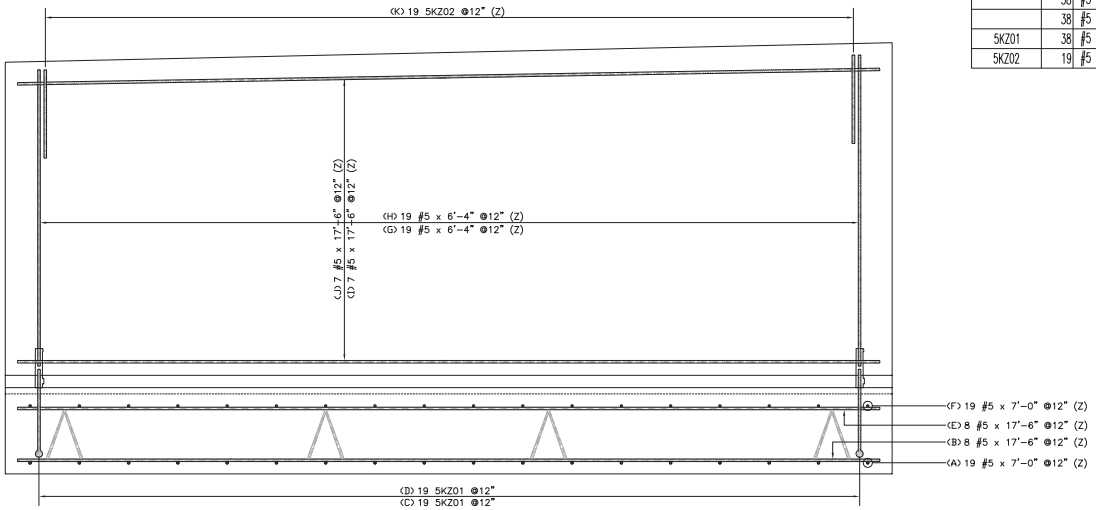

RETAINING WALL ELEVATION

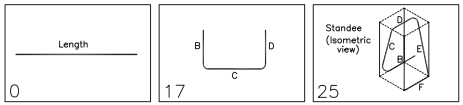

(2) 5'-0" LONG SAMPLE BARS WILL BE PROVIDED FOR EACH BAR SIZE

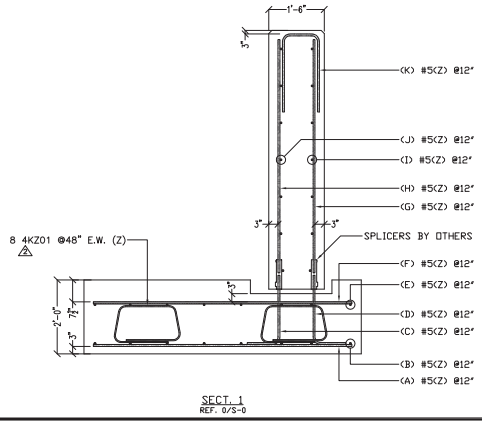

SECT. 1
REF. 0/S-0

ALL DUAL COATED REINF. DENOTED (Z)

ELEVATIONS & DIMENSIONS SHOWN ON THIS DWG. ARE FOR REINF. DETAILING PURPOSES ONLY AND ARE NOT INTENDED FOR CONSTRUCTION.

REINF. BARS ASTM A615 GRADE 60 DUAL COATED

VERIFICATION OF UNCLEAR INFORMATION MAY BE REQUESTED ON THIS DRAWING. SHOULD VERIFICATION BE LEFT UN-ADDRESSED IT WILL REMAIN AS SHOWN AND ASSUME TO BE CORRECT.

Vermont Agency of Transportation

RECEIVED

Abutment Submittal 2 011215_Markup.pdf

CK'D BY CLB OK'D BY DRP

January 13, 2015

RESUBMIT NO Approved

BY C. CARSLON DATE 01/15/15

FOR FIELD USE

LEGEND:
CONT.-CONTINUOUS
TRANS.-TRANSVERSE
DWLS.-DOWELS
VERTS.-VERTICAL
HORIZ.-HORIZONTAL
T&B -TOP & BOTTOM
I.F.-INNER FACE
O.F.-OUTER FACE
E.E.-EACH END
E.F.-EACH FACE
F.F.-FRONT FACE
R.F.-REAR FACE
E.W.-EACH WAY
O.C.-ON CENTER
L.W.-LONG WAY
S.W.-SHORT WAY

	DATE	REV.#	SENT FOR
6			
5			
4	01-12-15	2	DFI REVIEWED/FOR FIELD USE
3	12-30-14		APPROVED
2	12-8-14		REVISED/SOI COM/FOR APPROVAL
1	12-8-14		FOR APPROVAL

DIMENSION
DIMENSION FABRICATORS INC.
2000 7TH STREET
SODIA, N.Y. 12302
Ph: (518) 374-1938
FAX (518) 374-4830
www.dimensionfabricators.com

STRUCTURE	VTAOT STOWE BRF 0235(11)
LOCATION	WILLISTON, VT
ARCHITECT	
ENGINEER	
CUSTOMER	SD IRELAND CONCRETE CONST. CORP.
DRAWN BY ED	DATE 12/8/14
DFI #	9117
DRAWING COVERS	RETAINING WALL DUAL COATED REINFORCING
DRAWING #	K

Vermont Agency of Transportation
RECEIVED
Abutment Submittal 2 011215_Markup.pdf
CK'D BY CLB OK'D BY DRP
January 13, 2015
RESUBMIT NO Approved
BY C. CARLSON DATE 01/15/15

S.D. Ireland
Concrete Construction Corporation

CONCRETE MIX DESIGN

6,000 psi mix will be used for higher, early strength

6000 psi

SCC

SDI MIX CODE: P60TER

DATE: March 28, 2014 **PLANT:** Burlington/Williston, VT

PROJECT: General DOT Precast - 2014

FINE AGGREGATE: ASTM C 33
Source: Hinesburg Sand & Gravel
Specific Gravity: 2.67 (Abs.: 1.3%)
Fineness Modulus: ≥ 2.6

COARSE AGGREGATE: ASTM C 33
Source: S.D. Ireland, Brownell Quarry
Specific Gravity: 2.80 (Abs.: 0.30%)
Description 3/4" 100% Crushed Stone (Size #67)

CEMENT: Ternary Blend Cement; Lefarge North America Lakes and Seaway Re St. Constant, Quebec (Sp. Gvty. 3.02)

ADMIXTURES: Water Reducer (HRWR): Glenium 7500; BASF
Air Entraining Agent: Darex II AEA; Grace Concrete Chemicals

CONSTITUENTS (LBS. /YD³)

		Abs.Vol.
Coarse Aggregate (SSD)	1750	10.02
Fine Aggregate (SSD)	1017	6.10
Cement	800	4.25
Water	304.6	4.88
Air Content (Entrained)	6.5%	1.75
Total	3872	27.00ft³

MIX PROPERTIES

Water Cement Ratios: 0.38
Entrained Air Content: 5.0 % – 9.0%
Dry Unit Weight: 144.2 ± pcf
Spread: 20" to 28"
VSI ≤ 1

***ADMIXTURE(S) DOSEAGE (OZ. /YD³)**

Glenium 7500 (HRWR)	56 - 64
Darex II AEA	2.8

Approved by James Wild, VAOT Composite Materials Engineer 7/17/14

*Admixture dosage rates are subject to change.

BREAK HISTORY±

24-HR.	3400 PSI
7-DAYS	6000 PSI
28-DAYS	6700 PSI

P. O. Box 2286, South Burlington, VT 05407 • 193 Industrial Avenue, Williston, VT 05495

S.D. Ireland is an Equal Opportunity Employer

Vermont Agency of Transportation
RECEIVED
Abutment_WingWall_RetainingWall Submittal 1 120814_Resubmit 12.22.14.pdf
CK'D BY CLB OK'D BY DRP
December 9, 2014
RESUBMIT NO Approved
BY C. CARLSON DATE 12/22/14

24" corrugated steel pipe for the Pile Sleeves

SPECIFICATION FOR CORRUGATED STEEL PIPE – GALVANIZED STEEL:

SCOPE:
THIS SPECIFICATION COVERS THE MANUFACTURE AND INSTALLATION OF THE GALVANIZED CORRUGATED STEEL PIPE(CSP) DETAILED IN THE PROJECT PLANS.

MATERIALS:
THE GALVANIZED STEEL COILS SHALL CONFORM TO THE APPLICABLE REQUIREMENTS OF AASHTO M 218 OR ASTM A 929.

PIPE:
THE CSP SHALL BE MANUFACTURED IN ACCORDANCE WITH THE APPLICABLE REQUIREMENTS OF AASHTO M–36 OR ASTM A 760. THE PIPE SIZES, GAUGES AND CORRUGATIONS SHALL BE AS SHOWN ON THE PROJECT PLANS.

ALL FABRICATION OF THE PRODUCT SHALL OCCUR WITHIN THE UNITED STATES.

HANDLING & ASSEMBLY:
SHALL BE IN ACCORDANCE WITH NCSPA'S (NATIONAL CORRUGATED STEEL PIPE ASSOCIATION) RECOMMENDATIONS.

INSTALLATION:
SHALL BE IN ACCORDANCE WITH AASHTO STANDARD SPECIFICATIONS FOR HIGHWAY BRIDGES, SECTION 26, DIVISION II OR ASTM A 798 AND IN CONFORMANCE WITH THE PROJECT PLANS AND SPECIFICATIONS. IF THERE ARE ANY INCONSISTENCIES OR CONFLICTS, THE CONTRACTOR MUST BRING THEM TO THE ATTENTION OF THE PROJECT ENGINEER.

IT IS ALWAYS THE CONTRACTOR'S RESPONSIBILITY TO FOLLOW OSHA GUIDELINES FOR SAFE PRACTICES.

CONSTRUCTION LOADS:
CONSTRUCTION LOADS MAY BE HIGHER THAT FINAL LOADS. FOLLOW THE MANUFACTURERS OR NCSPA'S GUIDELINES.

CONTECH®
CONSTRUCTION PRODUCTS INC.
1001 GROVE STREET, MIDDLETOWN, OH 45044
PH: 1.800.338.1122 FAX: 513.425.5993
© COPYRIGHT

THIS PRINT IS OWNED BY CONTECH CONSTRUCTION PRODUCTS INC. AND MUST BE RETURNED UPON REQUEST. NOT TO BE COPIED.

CONTECH ID# 0000

SPECIFICATION

GALVANIZED
CORRUGATED STEEL PIPE
CONTECH DWG #1011248A

SCALE:	1" = 1'-0"
DRAWN BY:	JPP
DATE:	8/16/2000
REV. BY:	JSM
DATE:	3/2/05
SHEET:	1 of 1

H:\ACAD Data\ES Standard Details\Specs\CMP\CSP GALV SPEC (1011248).dwg 3/3/2005 3:58:32 PM EST

STOWE VT

11/21/14
WFD

Vermont Agency of Transportation

RECEIVED

Abutment Submittal 2 011215_Markup.pdf

CK'D BY CLB OK'D BY DRP

January 13, 2015

RESUBMIT NO **Approved**

BY C. CARLSON DATE 01/15/15

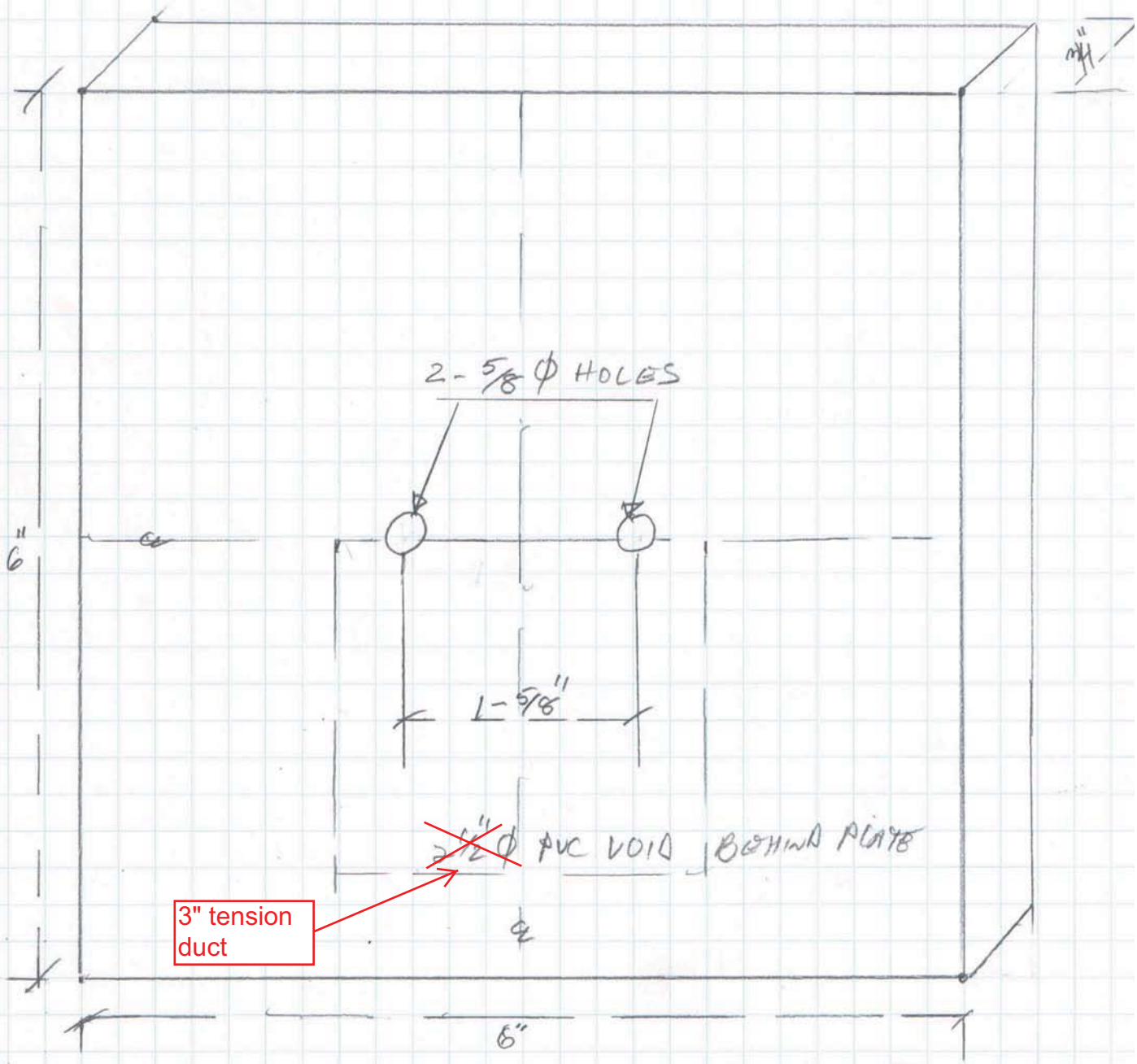

6" x 6" x 3/4" GALVANIZED PLATE @ 2-5/8" ϕ HOLES

Vermont Agency of Transportation

RECEIVED

Abutment_WingWall_RetainingWall Submittal 1 120814_Resubmit 12.22.14.pdf

CK'D BY CLB OK'D BY DRP

December 9, 2014

RESUBMIT NO Approved AsNoted

BY C. CARLSON DATE 12/22/14

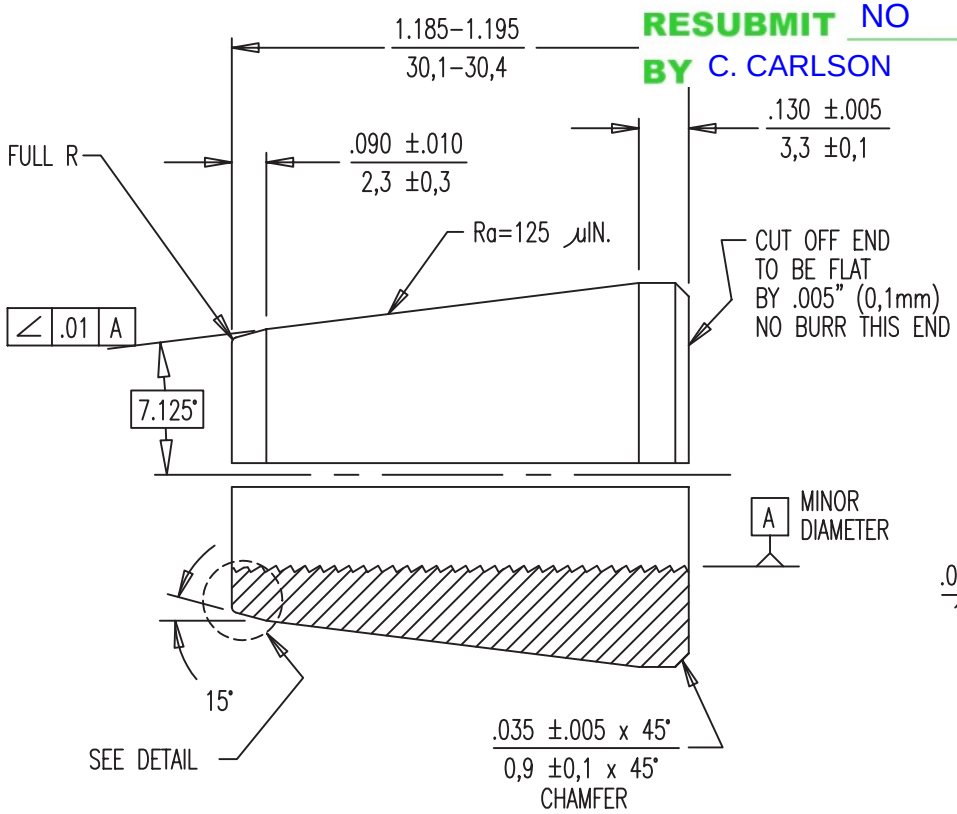

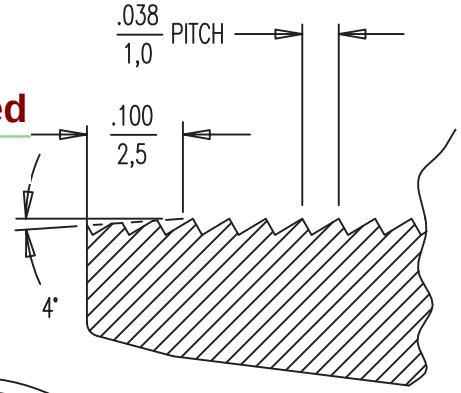

DETAIL

SCALE 5:1

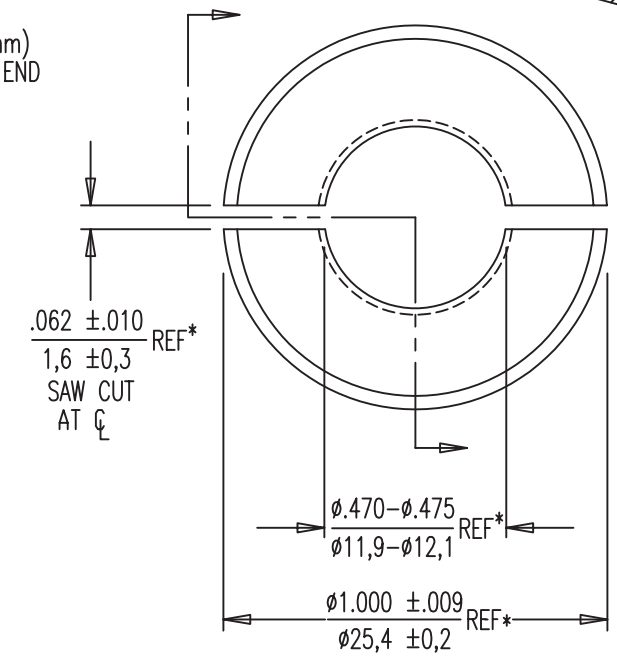

* ON UNCUT WEDGE.

NOTES:

1. INTERPRET THIS DRAWING PER ASME Y 14.5M–1994.
2. MAKE SURE THAT THE BUTRESS THREAD IS ORIENTED IN THE DIRECTION SHOWN ON THIS DRAWING.

5

Galvanized

PART NO.	DESCRIPTION
303525	UNCOATED
303526	ZINC PLATED

DYWIDAG POST–TENSIONING SYSTEMS

0.5" 2–PART WEDGE, 1.2" LONG

DATE: 10–21–94 | DWG: G. MALECKI | CHK: C.S. | APP: K.S.

This drawing, the pertinent enclossures, descriptions, calculations etc. and their contents are the property of DYWIDAG SYSTEMS INTERNATIONAL, USA, INC. They are not allowed to be duplicated with-out our permission. They are also not to be shown or explained for any reason to a third party other than for reasons expressly intended by the original receiver. They have to be returned on request.

DIMENSIONS: INCH/mm
mm FOR REFERENCE ONLY

Q.A.

QUALITY PLAN NUMBER: QS00000500S

TOLERANCES: ±.020 UNLESS NOTED

WEIGHT .134 LBS.

MATERIAL: 1" ROUND 12L14

SCALE 2:1 5:1

REV.	DATE	NAME	
1	06–03–96	C.S.	
2	06–28–96	C.S.	
3	09–29–97	A.W.	PB–105
4	01–05–98	A.W.	ECRN–0049
5	09–17–04	C.S.	ECRN–0104

PART NUMBER 303525 303526

DRAWING NUMBER 303525

DYWIDAG–SYSTEMS INTERNATIONAL, USA, INC. DSI

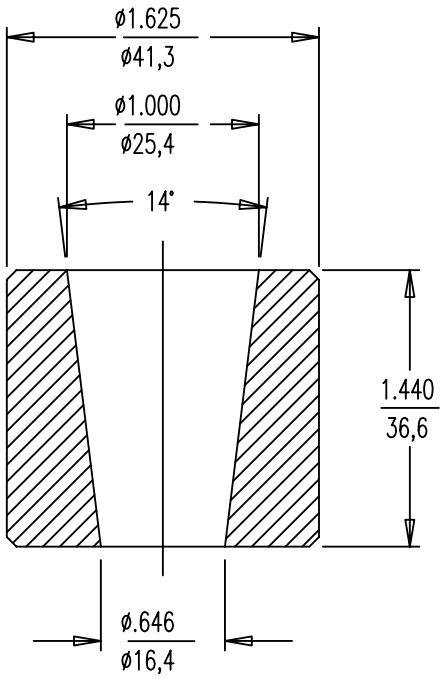

Vermont Agency of Transportation

RECEIVED

Abutment_WingWall_RetainingWall Submittal 1 120814_Resubmit 12.22.14.pdf

CK'D BY CLB OK'D BY DRP

December 9, 2014

RESUBMIT NO Approved AsNoted

BY C. CARLSON DATE 12/22/14

NOTE:
RECOMMENDED WEDGES:
-2-PART WEDGE 303525
FOR BARE STRAND
-3-PART WEDGE 303527
FOR GALVANIZED STRAND.

PART NO.	DESCRIPTION
303535	UNCOATED
303539	ZINC PLATED

Galvanized

DYWIDAG POST-TENSIONING SYSTEMS

0.5" BARREL CHUCK

DATE: 10-20-94 | DWG: G. MALECKI | CHK: C.S. | APP: K.S.

This drawing, the pertinent enclossures, descriptions, calculations etc. and their contents are the property of DYWIDAG SYSTEMS INTERNATIONAL, USA, INC. They are not allowed to be duplicated with-out our permission. They are also not to be shown or explained for any reason to a third party other than for reasons expressly intended by the original receiver. They have to be returned on request.

DIMENSIONS: INCH/mm
mm FOR REFERENCE ONLY

TOLERANCES:
±.020
UNLESS NOTED

MATERIAL: 6
ASTM A108,
1045 OR 1144

Q.A.

WEIGHT
.63
LBS.

SCALE
1:1

QUALITY PLAN NUMBER:
QS00028200S

REV.	DATE	NAME	
1	02-06-96	C.S.	
2	01-27-97	C.S.	ECRN-026
3	03-11-97	C.S.	
4	05-23-97	C.S.	
5	09-29-97	A.W.	PB-105
6	03-12-04	C.S.	ECRN-101

PART NUMBER
303535
303539

DRAWING NUMBER
303535

DYWIDAG-SYSTEMS INTERNATIONAL, USA, INC. DSI

Vermont Agency of Transportation
RECEIVED
Abutment_WingWall_RetainingWall Submittal 1 120814_Resubmit 12.22.14.pdf
CK'D BY CLB OK'D BY DRP
December 9, 2014
RESUBMIT NO Approved
BY C. CARLSON DATE 12/22/14

Southern Pipe, In
P. O. Box 606, 135 Random Drive, N
Phone: 704-463-5202 Fax: 704-463

SCHEDULE 40 CONDUIT
HEAVY WALL RIGID PVC NONMETALLIC CONDUIT
FOR USE IN ABOVE GROUND AND UNDERGROUND APPLICATIONS

SIZE	PART NUMBER	DESCRIPTION	MIN WALL	O.D.	WEIGHT PER 100'	PALLET QTY
1/2"	41505 42505	10 FT BE 20 FT BE	.109	.840	16	6000 12000
3/4"	41508 42508	10 FT BE 20 FT BE	.113	1.050	22	4400 8800
1"	41510 42510	10 FT BE 20 FT BE	.133	1.315	32	3600 7200
1 1/4"	41512 42512	10 FT BE 20 FT BE	.140	1.660	43	3300 6600
1 1/2"	41515 42515	10 FT BE 20 FT BE	.145	1.900	52	2250 4500
2"	41520 42520	10 FT BE 20 FT BE	.154	2.375	70	1400 2800
2 1/2"	41525 42525	10 FT BE 20 FT BE	.203	2.875	125	930 1860
3"	41530 42530	10 FT BE 20 FT BE	.216	3.500	156	880 1760
3 1/2"	41535 42535	10 FT BE 20 FT BE	.226	4.000	188	630 1260
4"	41540 42540	10 FT BE 20 FT BE	.237	4.500	223	570 1140
	42550	20 FT BE	.258	5.563	310	380 760
6"	41560 42560	10 FT BE 20 FT BE	.280	6.625	395	260 520
*8"	41580	10 FT BE	.322	8.625	547	140

3" Conduit for the tensioning sleeves

Southern Pipe Schedule 40 Conduit is produced to the following Standards:

Underwriters Laboratory, Inc.® (UL)	UL 651
National Electrical Manufacturers Association (NEMA)	TC-2
National Electrical Manufacturers Association (NEMA)	TC-18
Federal Specification	WC-1094-A

* 8" Sch 40 is a non (UL) LISTED product

Rated for 90° C

UL LISTED

RUS listed
Sunlight Resistant

PATTERSON
Your Single Source Supplier

Vermont Agency of Transportation
RECEIVED
Abutment Submittal 2 011215_Markup.pdf

CK'D BY CLB OK'D BY DRP
January 13, 2015
RESUBMIT NO Approved
BY C. CARLSON DATE 01/15/15

INSERTS

NMB SPLICE SLEEVE - U-X S

The NMB SPLICE-SLEEVE is a m
a cylindrical shaped steel sleeve
strength grout. Reinforcing bars
at the center of the sleeve. The interior of the sleeve is then filled with SS MORTAR grout.

- *System develops the tensile and compressive strengths in excess of the specified minimum for ASTM A615 and A706, Grade 60 bars conforming to the latest ACI 318 Building Code Requirements.*
- *Exceeds requirements of:*
  - Type 1 connection - 125% of grade 60 rebar
  - Type 2 connection - 150% of grade 60 rebar
- *Sleeve iron castings conform to proprietary specification based on ASTM A536-84*
- *SS Mortar meets the requirements for use in the sleeves under ICC-ESR 3433 and is required for use in NMB Splice Sleeve System*
- *Standard finish is plain. Zinc or epoxy coated available.*

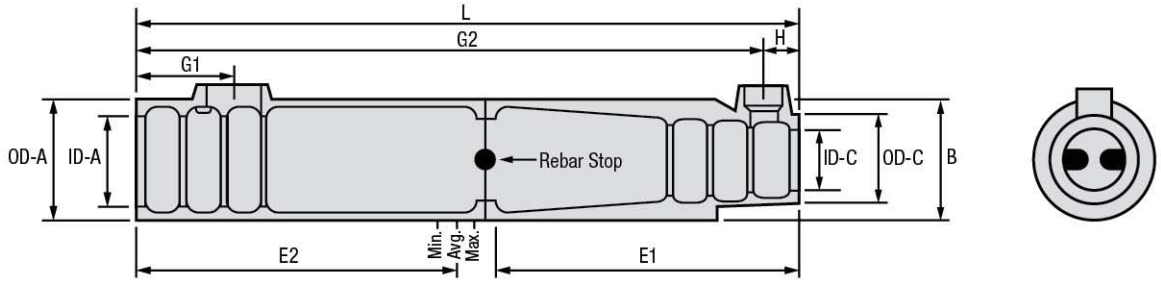

DIMENSIONS			Narrow End Diameter			Wide End Diameter		Grout Port Locations			
ALP Part #	Grade 60 Rebar Size	Sleeve Length L	ID-C	OD-C	Max Diameter B	ID-A	OD-A	G1	G2	H	Weight per sleeve (lbs)
SS 5U-X	#5	9-5/8"	7/8"	1-1/2"	1-7/8"	1-1/4"	1-7/8"	1-7/8"	8-3/4"	7/8"	3.09
SS 6U-X	#6	11-1/4"	1"	1-5/8"	2"	1-3/8"	2"	1-7/8"	10-3/8"	7/8"	3.70
SS 7U-X	#7	12-3/4"	1-1/8"	1-3/4"	2-3/8"	1-3/4"	2-3/8"	1-7/8"	11-7/8"	7/8"	5.10
SS 8U-X	#8	14-5/8"	1-1/4"	1-7/8"	2-1/2"	1-7/8"	2-1/2"	1-7/8"	13-5/8"	7/8"	5.86
SS 9U-X	#9	16-3/8"	1-3/8"	2"	2-5/8"	2"	2-5/8"	1-7/8"	15-1/2"	7/8"	7.21
SS 10U-X	#10	17-7/8"	1-5/8"	2-1/4"	2-7/8"	2-1/8"	2-7/8"	1-7/8"	17"	7/8"	9.47
SS 11U-X	#11	19-1/2"	1-3/4"	2-3/8"	3"	2-3/8"	3"	1-7/8"	18-5/8"	7/8"	10.80
SS 14U-X	#14	24-3/8"	2"	2-3/4"	3-1/2"	2-5/8"	3-1/2"	1-7/8"	23-3/4"	7/8"	19.70
SS 18U	#18	36-1/4"	2-5/8"	3-5/8"	4-1/2"	3-1/4"	4-1/4"	2-5/8"	35-1/2"	5/8"	52.50

Each Splice Sleeve Set includes the following: sleeve, washer (GRW), hole seals (HS) and plug (RP).

SPECIFICATIONS		Recommended Rebar Embedment Length					
ALP Part #	Grade 60 Rebar size	Factory Dowel - E1		Field Dowel - E2			Total Tolerences
		Min.	Max	Min.	Average	Max	
SS 5U-X	#5	4-1/8"	4-3/8"	4-1/8"	4-1/2"	4-7/8"	5/8"
SS 6U-X	#6	4-7/8"	5-1/8"	4-7/8"	5-3/8"	5-3/4"	5/8"
SS 7U-X	#7	5-3/4"	5-7/8"	5-3/4"	6-1/8"	6-1/2"	7/8"
SS 8U-X	#8	6-1/2"	6-3/4"	6-1/2"	7"	7-1/2"	7/8"
SS 9U-X	#9	7-3/8"	7-1/2"	7-3/8"	7-7/8"	8-3/8"	7/8"
SS 10U-X	#10	8-1/4"	8-3/8"	8-1/4"	8-5/8"	9-1/8"	7/8"
SS 11U-X	#9*	9"	9-1/8"	9"	9-1/2"	9-7/8"	1-7/16"*
	#11	9"	9-1/8"	9"	9-1/2"	9-7/8"	7/8"
SS 14U-X	#11*	11-3/8"	11-5/8"	11-3/8"	11-7/8"	12-3/8"	1-7/16"*
	#14	11-3/8"	11-5/8"	11-3/8"	11-7/8"	12-3/8"	7/8"
SS 18U	#18	17"	18-1/8"	17"	17-1/2"	18-1/8"	1"

Each sleeve is included with a washer (GRW), hole seals (HS) and plug (RP).
* Tolerances listed are based upon up-sizing of the sleeve in relation to the rebar to increase the total tolerances.

PATTERSON
Your Single Source Supplier

NMB SPLICE SLEEVE - SNX11 & A11W

ELASTOMER PLUGS

Elastomer Plugs (EP) are designed to prevent the intrusion of concrete into the Splice Sleeve during the casting of the concrete elements.

ALP Part #	Fits ALP Part #	Grade 60 Rebar Size	Material	Color
SS EO911	SS SNX11	#9	Elastomer	Yellow
	SS A11W	#9	Elastomer	Yellow
SS E11	SS SNX11	#11	Elastomer	Black
	SS A11W	#11	Elastomer	Black

* (1) Elastomer Plug included with each Splice Sleeve

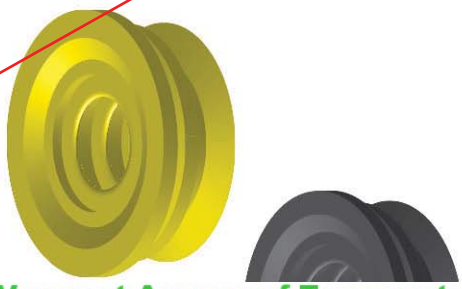

Vermont Agency of Transportation
RECEIVED
Abutment Submittal 2 011215_Markup.pdf
CK'D BY CLB OK'D BY DRP
January 13, 2015
RESUBMIT NO Approved
BY C. CARLSON DATE 01/15/15

INLET AND OUTLET TUBES

Inlet / Outlet Tubes are designed to attach to the Splice Sleeve to create path for the grout to be pumped from the concrete surface in to the Splice Sleeve. Tubes are installed into the splice sleeve and capped with a hole seal before casting of the concrete panels.

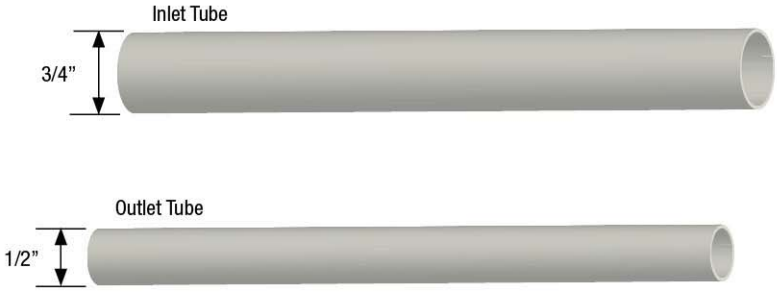

The intent of this cut sheet is to show that regardless of the size of the grout sleeve, all inlet tubes are 3/4" and all outlet tubes are 1/2". All tubes will be capped during production and shipping of precast pieces.

Grade 60 Rebar Size	Fits ALP Part #	Inlet PVC Tube	Outlet PVC Tube
#11	SS SNX11	3/4" Schedule 40 PVC Pipe*	1/2" Schedule 40 PVC Pipe*
	SS A11W		

* Not supplied by Splice Sleeve North America. Can be picked up at a local supplier.

HOLE SEALS

Hole Seals (HS) are plastic plugs designed to temporarily prevent intrusion of the concrete into PVC tube during casting of concrete elements.

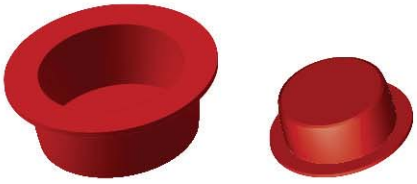

3/4" Inlet 1/2" Outlet

ALP Part #	PVC Pipe	Fits ALP Part #	Grade 60 Rebar Size
SS HSL	3/4"	SS SNX11	#11
		SS A11W	
	1/2"	SS SNX11	#11
		SS A11W	

*(1) Set of Hole Seals included with each Splice Sleeve
* Sold in sets of (1) 1/2" and (1) 3/4" Hole Seal

Vermont Agency of Transportation
RECEIVED
Abutment_WingWall_RetainingWall Submittal 1 120814_Resubmit 12.22.14.pdf

CK'D BY CLB OK'D BY DRP
December 9, 2014
RESUBMIT NO Approved
BY C. CARLSON DATE 12/22/14

EEVE - SS MORTAR

at 68° F

- High Ultimate Strength - exceeds 13,860 PSI in 28 days
- 35° F to 140° F ambient temperature application
- Fast 2-1/2 minute mixing time (depending on mixing speed)
- 6"-9-1/4" flowable acceptable range
- *See Splice Sleeve Engineering Sheet for proper mixing instructions

ALP Part #	Grade 60 Rebar Size	SS Mortar per Sleeve (lbs.)	Sleeves per Bag
SS 5U-X	#5	0.94	58.8
SS 6U-X	#6	1.31	42.0
SS 7U-X	#7	2.06	26.7
SS 8U-X	#8	2.7	20.4
SS 9U-X	#9	3.2	17.2
SS 10U-X	#10	4.01	13.7
SS 11U-X	#11	5.01	11.0
SS SNX11	#11	4.91	11.2
SS A11W	#11	6.07	9.1
SS 14U-X	#14	7.67	7.2
SS 18U	#18	22.62	2.4

- Factor in additional 0.25 lbs per sleeve for 5" long inlet and outlet tubes.
- Factor in additional 15% for waste and field loss.

GROUT WASHER

Grout Washers are custom metal washers with a rubber seal designed to prevent the intrusion of bedding mortar into the sleeve for post grout applications or to prevent leakage of SS Mortar out of the sleeve in pre-Grout applications.

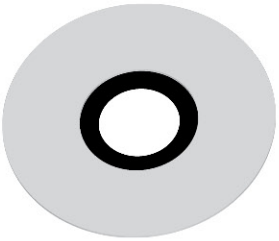

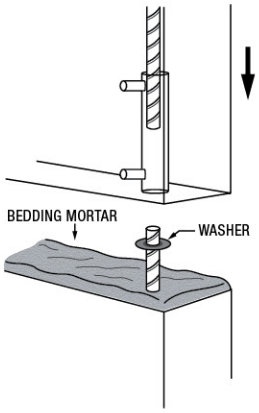

ALP Part #	Sleeve Size	Fits ALP Part #
SS G56	#5, #6	SS 5U-X, SS 6U-X
SS G789	#7, #8, #9	SS 7U-X, SS 8U-X, SS 9U-X
SS G10	#10	SS 10U-X
SS G11	#11	SS 11U-X, SS SNX11
SS GA11W	#11	SS A11W
SS GRW14	#14	SS 14U-X
SS GRW18	#18	SS 18-X

*(1) Grout Washer included with each Splice Sleeve

COIL SPRING

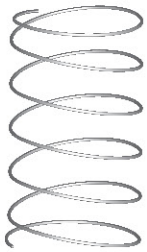

Coil Springs are designed to support the grout washer tight against the Splice Sleeve during the grouting process.

ALP Part #	Sleeve Size
SS CS	#5-#18

LARGE TAPER SPRING

Large taper springs are a heavy duty spring designed to support the grout washer tight against the Splice Sleeve in Pre-Grout applications.

ALP Part #	Sleeve Size
SS CSLT	#5-#18

Vermont Agency of Transportation
RECEIVED
Abutment_WingWall_RetainingWall Submittal 1 120814_Resubmit 12.22.14.pdf
CK'D BY CLB OK'D BY DRP
December 9, 2014
RESUBMIT NO Approved
BY C. CARLSON DATE 12/22/14

1. SS MORTAR® (GROUT) ENGINEERIN

SS Mortar® (Grout) manufactured by Splice Sleeve Jap
filler grout developed for the NMB Splice-Sleeve® Sy
warranties, expressed or otherwise implied.

SS Mortar® (Grout) is packaged
required quantity of SS Mortar®

High Early Strength: The grout in a flowable consistency will attain above 4,000 psi in less than 24 hr. at a temperature of 68°F (20°C). Rapid strength gain allows erection to continue.

High Ultimate Strength: The grout attains 14,000 psi compressive strength in 28 days at 68°F (20°C).

SS Mortar® is a ready-to-use formulation requiring only the proper amount of water, which is suggested at 0.98 gal. = 125 fl. oz. = 3.7 liters per bag. The maximum water is 1.03 gal. = 132 fl. oz. = 3.9 liters. Do not use admixtures.

Mixing time is a minimum of 2½ minutes with ≥ 7 amp electric mixer, providing 500 to 1,300 rpm and a proper paddle.

Table I-3: Grout Requirement for Sleeves

REBAR Size		Splice-Sleeve	SS Mortar	
U.S.	Metric	Model	lb./sleeve	Sleeves/Bag
#5	16 MM	5 U-X	0.94	**58.8**
#6	20 MM	6 U-X	1.31	**42.0**
#7	22 MM	7 U-X	2.06	**26.7**
#8	25 MM	8 U-X	2.7	**20.4**
#9	28 MM	9 U-X	3.2	**17.2**
#10	32 MM	10 U-X	4.01	**13.7**
#11	35 MM	11 U-X	5.01	**11.0**
#11	35 MM	SNX 11	4.91	**11.2**
#11	35 MM	A11W	6.07	**9.1**
#14	40 MM	14 U-X	7.67	**7.2**
#18	57 MM	18 U	22.62	**2.4**
Inlet + Outlet PVC tubes x 5"			0.25	**≈ 225**

Note: Always mix full bags: no partial bags

Year	11	12	13	14	15	16	17	18	19	20		
	A	B	C	D	E	F	G	H	I	J		
Month	1	2	3	4	5	6	7	8	9	10	11	12
	A	B	C	D	E	F	G	H	I	J	K	L
Day	As a number from 1 to 31											

Grout quantities shown in the table above are in dry powder weight of the grout to fill the space inside the sleeve after both rebars have been inserted into the sleeve. If pumping grout tubes add a little more-see example on chart. When "upsizing" add 20% for each rebar size.

An additional overage of 15% is recommended to provide for typical waste and field loss while continuously pumping large numbers of sleeves. The above overage does not cover losses from "left over" waste in the bucket, pump, hose and elsewhere. It is recommended that you allow an additional bag per grouting session. Better to have a bit too much than a bit too little and delay the job.

SS Mortar® should be stored in moderate/cool and dry conditions. It has a "freshness" bag life of one (1) year. Bags have a date stamp on the top using letters for the year (10 year period) followed by month and the last numbers mentions the day as shown in Table and Figure.

CF 25: 13 - 06 - 25 = June 25, 2013

Vermont Agency of Transportation
RECEIVED
Abutment_WingWall_RetainingWall Submittal 1 120814_Resubmit 12:22.14.pdf
CK'D BY CLB OK'D BY DRP
December 9, 2014
RESUBMIT NO Approved
BY C. CARLSON DATE 12/22/14

2. SS MORTAR® (GROUT) PERFORMAN

Table I-4: SS Mortar® (Grout) -

Water volume	Mix Temp	Curing Temp	Set Time Hi			
			Initial			
0.98 gal (3.7 liters)	**68**°F (20°C)	**41**°F (5°C)	9 hr. 31 min.	13 l		
		68°F (20°C)	4 hr. 18 min.	5 hr. 55 min.	6 5/8" (170 mm)	0.00%
		86°F (30°C)	2 hr. 23 min.	3 hr. 20 min.	6 1/2" (165 mm)	0.00%

Non-metallic, SS Mortar® must be used when the surrounding concrete and sleeve temperature is between 35°F to 140°F (2°C to 60°C). Freezing grout, before it achieves 1,500 psi will deplete strength. The grout should be mixed and pumped between 50°F and 95°F (10°C to 35°C). In extreme temperatures warm or iced water can be added to adjust mortar temperature. As per the Table shown below, strength gain of SS Mortar® is directly related to temperature and thus freezing/very cold conditions may require a heating plan until connection strength is reached allowing continued erection and structural specifications. (See Splice Sleeve User's Manual and/or call Splice Sleeve directly).

Table I-5: SS Mortar® (Grout) - Compressive Strength Time vs. Temperature

Curing Temperature	Compressive Strength, psi (MPa)					
	12 hrs.	18 hrs.	1 day	3 days	7 days	28 days
41°F (5°C)	----	**834** (6)	**1,869** (13)	**5,823** (40)	**8,871** (61)	**13,860** (96)
50°F (10°C)	**410** (3)	**1,869** (13)	**2,905** (20)	**6,858** (47)	**9,907** (68)	**14,895** (103)
68°F (20°C)	**1,869** (13)	**3,328** (23)	**4,364** (30)	**8,317** (57)	**11,366** (78)	**16,354** (113)
86°F (30°C)	**2,905** (20)	**4,364** (30)	**5,399** (37)	**9,352** (64)	**12,401** (86)	**17,389** (120)
104°F (40°C)	**3,708** (26)	**5,167** (36)	**6,202** (43)	**10,155** (70)	**13,204** (91)	**18,192** (125)

Calculated strength — calculated from the formula (24.758 Ln x Cumulative Temperature) -54.183

Consistency Flow tests are run using a "Flow Guide". The diameter of the "puddle" should be between 155 mm (6") minimum to 235 mm (9 ¼") maximum. The Flow Guide consists of a 2 in. (50 mm) diameter x 4 in. (100 mm) cylinder placed in the center of a level, smooth, non-absorbent surface. After filling and lifting the cylinder, the diameter of the resulting "puddle" of grout is measured. Figure below shows the step by step procedure for the flow test.

Details of the procedure are described in **GROUTPRO-N1**: "Recommended Procedure for Field Sampling and Testing SS Mortar®".

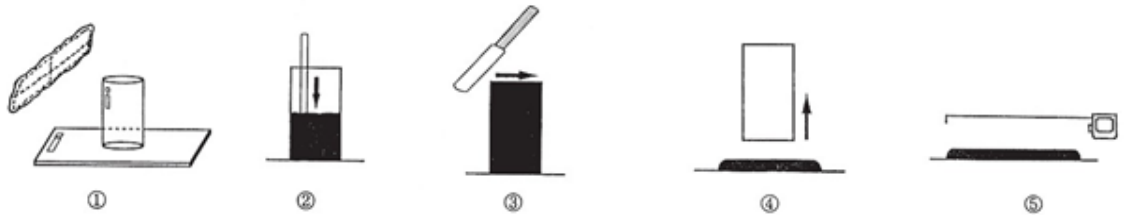

Related Documents:

- Material Safety Data Sheet: SS Mortar®
- Users' Manual for NMB Splice-Sleeve® System
- GROUTPRO-N1: Recommended Procedure for Field Sampling & Testing SS Mortar®
- Splice Sleeve "Grout Operation" slideshow.

Deslauriers

VERS-A-SHIM® MULTI-PACKS

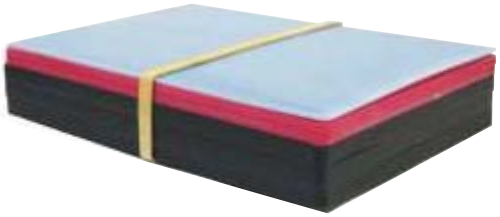

- Pre-assembled packages of shims designed for precise placing of large load bearing precast units.
- Each shim has no-slip serrations.
- Eliminates correction of elastomeric drift.
- Can be compressed sufficiently at post tensioning to allow load transfer to the grout.
- Vers-A-Shim® Multi-Packs are unaffected by liquids, ground chemicals, alkalis and micro-organisms.
- Performance characteristics are stable and predictable.

CAT# SP44MB: 4” Width, 4” Length, 1-1/16” Height.
CAT# SP46MB: 4” Width, 6” Length, 1-1/16” Height.

Vers-A-Shim Multi-Packs are 1-1/16” high and each pack consists of:

- One (1) 1/16” shims.
- Two (2) 1/8” shims.
- Three (3) 1/4" shims.

Shims for under retaining wall stem.

Shims are rubber-banded together for easy height adjustment and color coded by thickness. Each shim has no-slip serrations.

Engineering Specifications

- Compressive strength of 10.000 psi
- Coefficient of linear expansion is 3 to 5 x 10-5 inches/inch/°C.

Vermont Agency of Transportation
RECEIVED
Abutment_WingWall_RetainingWall Submittal 1 120814_Resubmit 12.22.14.pdf

CK'D BY CLB OK'D BY DRP

December 9, 2014

RESUBMIT NO Approved

BY C. CARLSON DATE 12/22/14

Telephone 215-855-8713 FAX 215-855-8714

GARY K. MUNKELT & ASSOCIATES

Consulting Engineers
Precast Concrete, Structural, Civil

1180 Welsh Rd. Suite 190 North Wales, PA 19454

PROJECT: CHECK CAPACITY OF LIFT SYSTEM COMPONENTS TO LIFT PRECAST CONCRETE ABUTMENT, WINGWALL, RETAINING WALL

CLIENT: S.D. IRELAND
WILLISTON, VT

LOCATION: STOWE BRF 0235
STOWE, VT

STATE OF VERMONT
GARY K. MUNKELT
NO. 6291
REGISTERED
PROFESSIONAL ENGINEER

1/8/15

TABLE OF CONTENTS

Title	Sheet
Abutment Lifting Detail	2
Wing Wall Lifting Detail	3
Retaining Wall Lifting Detail	4
Appendix A: Cable Components	
Appendix B: Insert Components	

Job No. 141228

Vermont Agency of Transportation
RECEIVED
Abutment Submittal 2 011215_Markup.pdf
CK'D BY CLB OK'D BY DRP
January 13, 2015
RESUBMIT NO Approved
BY C. CARLSON DATE 01/15/15

Vermont Agency of Transportation

RECEIVED

Abutment Submittal 2 011215_Markup.pdf

CK'D BY CLB **OK'D BY** DRP

January 13, 2015

RESUBMIT NO **Approved**

BY C. CARLSON **DATE** 01/15/15

Abutment Lifting Detail

*AB1N Shown as it is the heaviest one.

SHEET 2

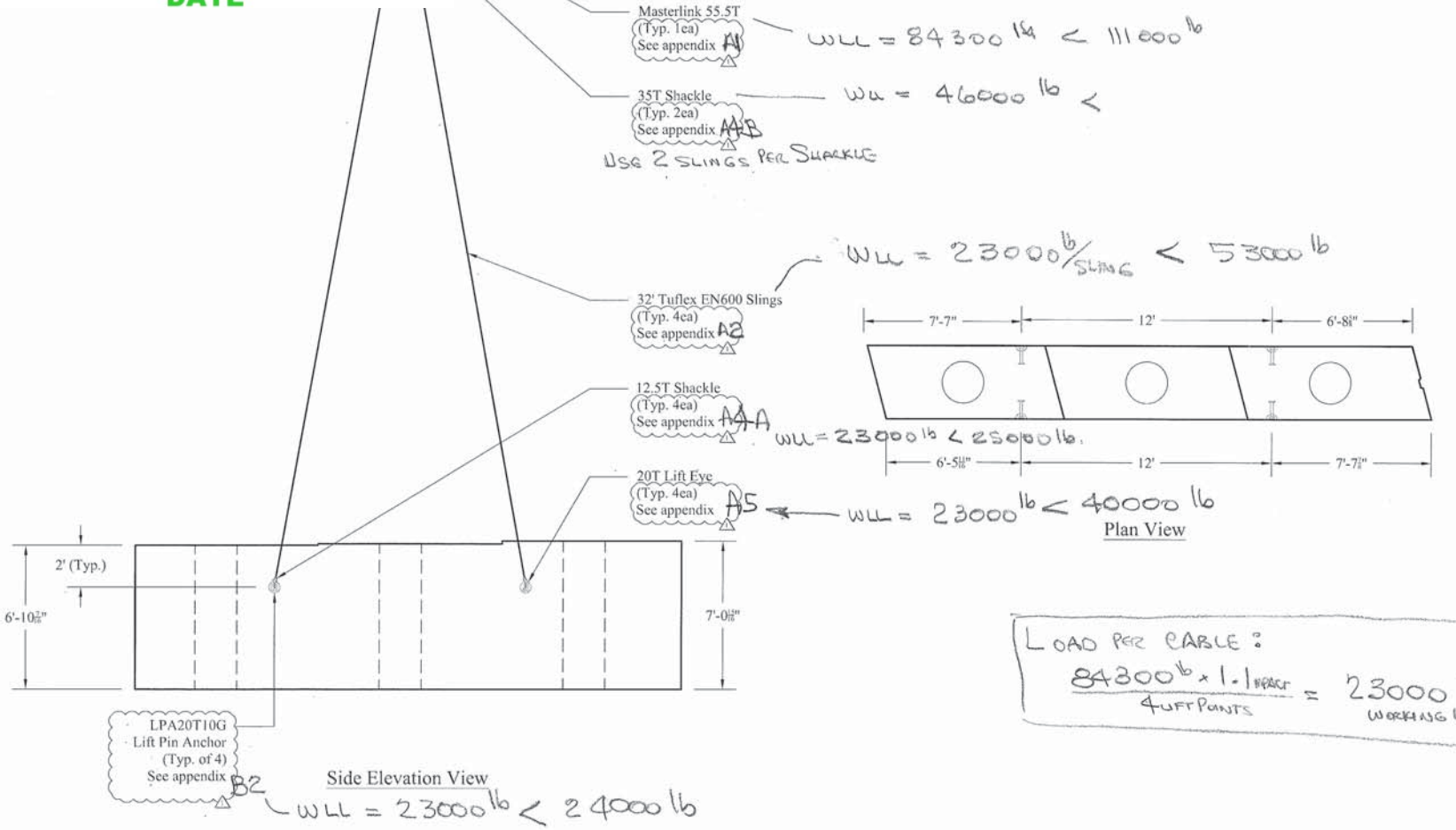

Weight: 84,300 lbs

CONTRACTORS VTSPE:	Rev.	Date	By	Description
	1	1/7/15	PMT	Changes per review

PRECAST CONCRETE ABUTMENT SHOP DRAWINGS (SDI JOB #15163)

SUPERVISOR: M. WHEELER
DETAILER: I. ADAMS
CHECKER: E. Barendse
ENGINEER:

PROJECT NAME: Stowe BRF 0235 (II)
PROJECT #: 0235 (II)
LOCATION: Stowe, VT

INSTALLER: CCS Construction, 138 Munson Ave, Morrisville, VT 05661, PH: 802-888-7701

FABRICATOR: 193 INDUSTRIAL AVE. WILLISTON, VT 05495, Ph: (802) 658-0201

SD Ireland Precast Division

12/03/14 | Lifting | 1 of 3

Wing Wall Lifting Detail

*WW-2 Shown as this is the heaviest one.

From Appendix A1
WW = 9450 lb < 111000 lb

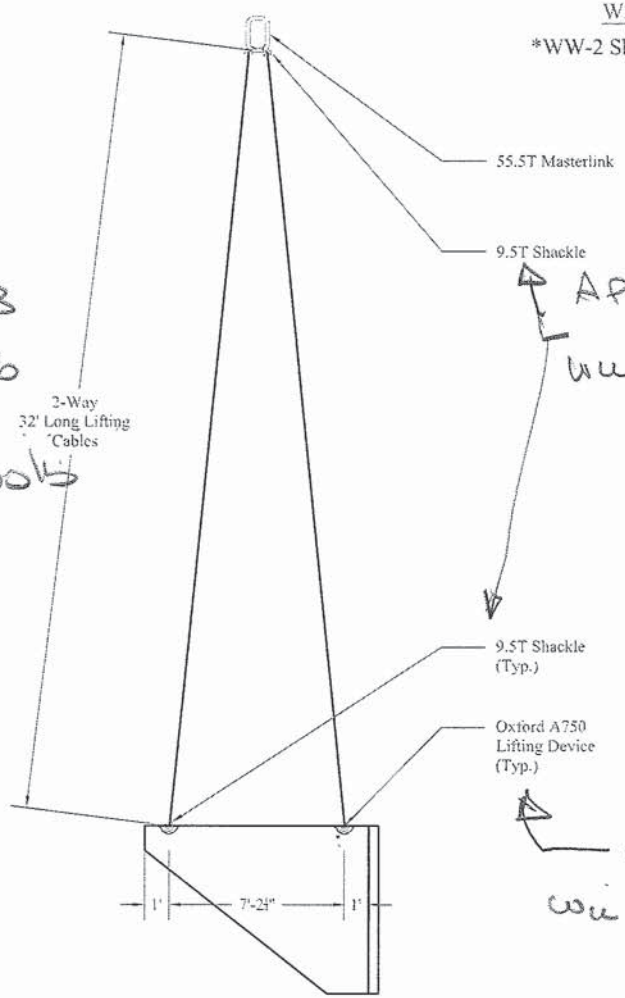

Side Elevation View

Appendix A3
WW = 9450 lb
< 19600 lb

Appendix A4A
WW = 5200 lb < 19000 lb

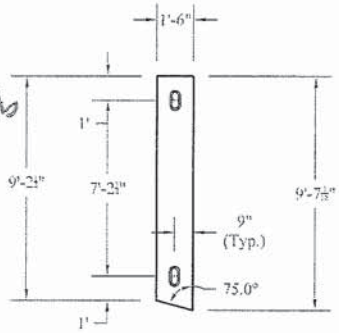

Plan View

Load Per Cable
$\frac{9450 \times 1.1}{2} = 5200$ lb

Appendix B1
WW = 5200 lb < 10000 lb

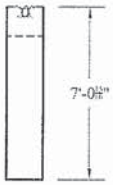

Section View

Sheet W

Weight: 9.450 lbs

PRECAST CONCRETE ABUTMENT SHOP DRAWINGS (SDI JOB #15163)		INSTALLER: CCS Construction, 138 Munson Ave, Morrisville, VT 05661, Ph: 802-888-7701	FABRICATOR: 193 INDUSTRIAL AVE. WILLISTON, VT 05495 Ph: (802) 658-0201 SD Ireland Precast Division
SUPERVISOR: M. WHEELER DETAILER: I. ADAMS CHECKER: E. Barendse ENGINEER:	PROJECT NAME: Stowe BRF 0235 (II) PROJECT #: 0235 (II) LOCATION: Stowe, VT	12/03/14	Lifting — 2 of 3

Vermont Agency of Transportation
RECEIVED
Abutment Submittal 2 011215_Markup.pdf

CK'D BY CLB OK'D BY DRP

January 13, 2015

RESUBMIT NO Approved

BY C. CARLSON DATE 01/15/15

Retaining Wall Lifting Detail

LOAD PER CABLE

$\frac{65700\ lb \times 1.1}{4} = 18100\ lb$

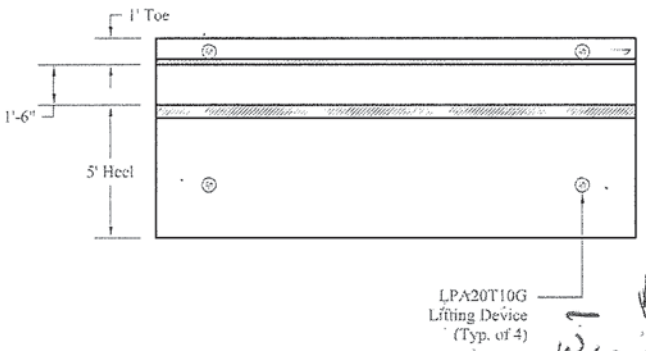

Plan View

APPENDIX B2
$W_{LL} = 18100\ lb < 18270\ lb$

APPENDIX A5
$W_{LL} = 18100\ lb < 200000\ lb$

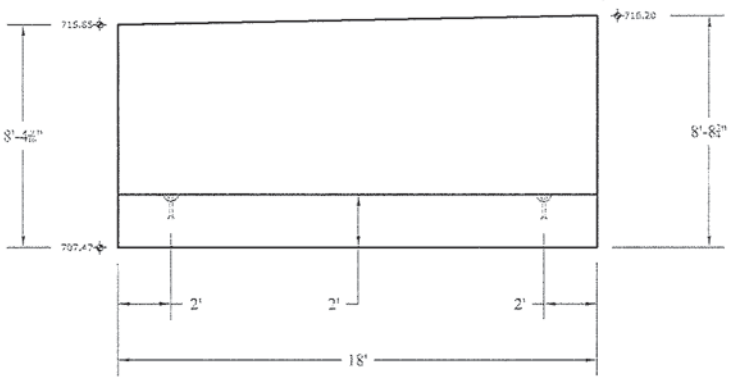

Side Elevation View

APPENDIX A3
$W_{LL} = 18100 < 19600\ lb$

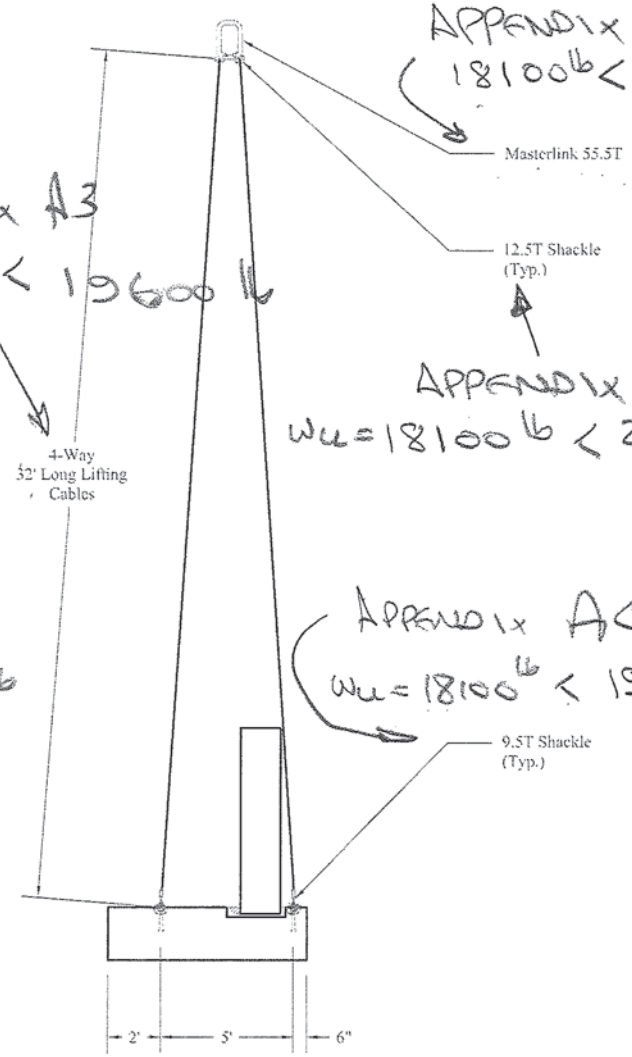

Section View

APPENDIX A1
$18100\ lb < 111000\ lb$

APPENDIX A4
$W_{LL} = 18100\ lb < 25000\ lb$

APPENDIX A4A
$W_{LL} = 18100\ lb < 19000\ lb$

Weight: 65,700 lbs

Vermont Agency of Transportation
RECEIVED
Abutment Submittal 2 011215_Markup.pdf

CK'D BY CLB OK'D BY DRP

January 13, 2015

RESUBMIT NO Approved

BY C. CARLSON DATE 01/15/15

PRECAST CONCRETE ABUTMENT SHOP DRAWINGS (SDI JOB #15163)		INSTALLER: CCS Construction, 138 Munson Ave, Morrisville, VT 05661, Ph: 802-888-7701	FABRICATOR: 193 INDUSTRIAL AVE. WILLISTON, VT 05495 Ph: (802) 658-0201 SD Ireland Precast Division
SUPERVISOR: M. WHEELER DETAILER: I. ADAMS CHECKER: E. Borendse ENGINEER:	PROJECT NAME: Stowe BRF 0235 (II) PROJECT #: 0235 (II) LOCATION: Stowe, VT	12/03/14	Lifting — 3 of 3

NI | Round Steel Chain

Round steel chains for use in lifting. Maximum working temperature: 400°F. Standard surface: blasted, clear painted.

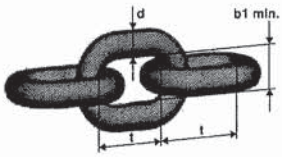

Code	Size	Nominal diameter d	Standard delivery length [feet]	Pitch t	Inside width b1 min.	Outside width b2 max.	WLL [lb]	Breaking force [lb]	Weight [lb/ft]
NI5.50	7/32"	0.217	400	0.67	0.31	0.83	2,700	10,800	0.470
NI70	9/32"	0.276	800	0.83	0.39	0.98	4,300	17,200	0.738
NI80	5/16"	0.315	500	0.94	0.43	1.14	5,700	22,800	0.939
NI100	3/8"	0.394	400	1.18	0.55	1.42	8,800	35,200	1.475
NI130	1/2"	0.512	200	1.54	0.71	1.85	15,000	60,000	2.548
NI160	5/8"	0.630	150	1.89	0.87	2.28	22,600	90,400	3.830
NI200	3/4"	0.787	100	2.44	1.02	2.80	35,300	141,200	5.780
NI220	7/8"	0.866	100	2.60	1.18	3.11	42,700	170,800	7.324
NI260	1"	1.024	100	3.07	1.38	3.70	59,700	238,800	10.214
NI320	1-1/4"	1.260	50	3.78	1.69	4.53	90,400	361,600	15.455

NEW

A | Master Link

Master link for 1 or 2 leg chain sling.

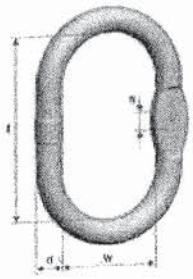

Code	WLL 0-45° [lb]	d [inch]	t [inch]	w [inch]	s [inch]	Weight [lb/pc.]	Master link for chain	
							1-leg	2-leg
A100	3,800	0.39	3.15	1.97	0.39	0.31	7/32"	-
A130	5,800	0.51	4.33	2.36	0.39	0.75	9/32"	7/32"
A160	7,500	0.63	4.33	2.36	0.55	1.17	5/16"	9/32"
A180	10,000	0.75	5.31	2.95	0.55	2.03	3/8"	5/16"
A220	16,700	0.91	6.30	3.54	0.67	3.53	1/2"	3/8"
A260	26,000	1.06	7.09	3.94	0.79	5.42	5/8"	1/2"
A320	39,100	1.30	7.87	4.33	1.02	9.13	3/4"	5/8"
A360	61,100	1.42	10.24	5.51	-	13.72	7/8"	3/4"
A450	83,100	1.77	13.39	7.09	-	28.27	1"	7/8"
A500	111,000	1.97	13.78	7.48	-	36.49	1-1/4"	1"
A560	156,600	2.36	15.75	7.87	-	59.56	-	1-1/4"
A720	234,900	2.76	18.11	9.84	-	99.23	-	-

Vermont Agency of Transportation
RECEIVED
Abutment Submittal 2 011215_Markup.pdf
CK'D BY CLB OK'D BY DRP
January 13, 2015
RESUBMIT NO Approved
BY C. CARLSON DATE 01/15/15

TUFLEX ENDLESS ROUNDSLINGS

Tuflex Endless (EN)
The Most Versatile *Tuflex* Roundsling

Features, Advantages and Benefits

Maintains all the basic *Tuflex* features plus...

Promotes Safety

- Load stability and balance can be achieved by spreading sling legs.

Saves Money

- Wear points can be shifted to extend sling life
- The most flexible style of sling

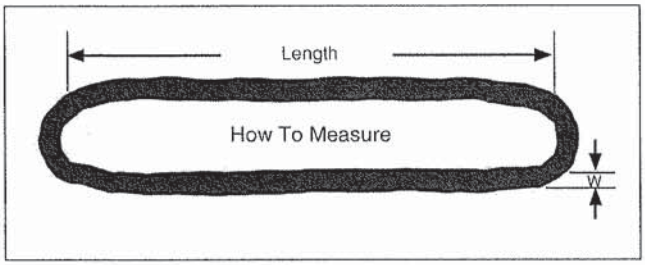

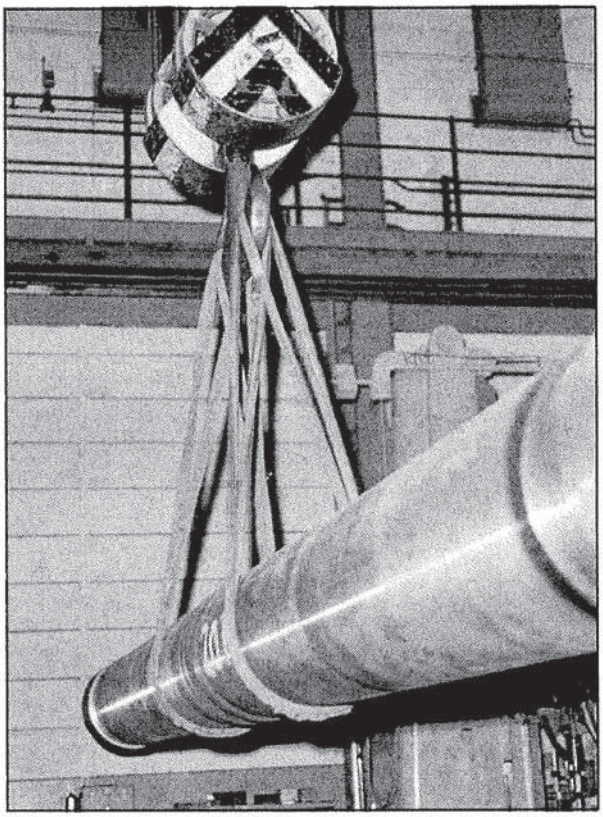

Tuflex

Part No.	Color	Rated Capacity (lbs.)* Vertical	Choker	Basket @ 90°	Basket @ 45°	Minimum Length (ft.)	Approximate Measurements Weight (lbs. / ft.)	Body Dia. Relaxed (in.)	(W) Width at Load (in.)	Minimum Hardware Dia. ** (in.)
EN30	Purple	2,600	2,100	5,200	3,600	1 1/2	.2	5/8	1	7/16
EN60	Green	5,300	4,200	10,600	7,400	1 1/2	.3	7/8	1 3/8	5/8
EN90	Yellow	8,400	6,700	16,800	11,800	3	.5	1 1/8	1 3/4	3/4
EN120	Tan	10,600	8,500	21,200	14,000	3	.6	1 1/8	1 7/8	7/8
EN150	Red	13,200	10,600	26,400	18,000	3	.8	1 3/8	2	1
EN180	White	16,800	13,400	33,600	23,000	3	.9	1 3/8	2 1/8	1 1/8
EN240	Blue	21,200	17,000	42,400	29,000	3	1.3	1 3/4	2 5/8	1 3/16
EN360	Grey	31,000	24,800	62,000	43,000	3	1.7	2 1/4	3 1/4	1 1/2
→ EN600	Brown	53,000	42,400	106,000	74,000	8	2.8	2 3/4	4	2
EN800	Olive	66,000	52,800	132,000	93,000	8	3.4	3 1/8	4 5/8	2 1/8
EN1000	Black	90,000	72,000	180,000	127,000	8	4.3	3 5/8	5 1/4	2 1/2

Used when lifting the abutment pieces.

* **⚠ WARNING** Do not exceed rated capacities. Sling capacity decreases as
Slings should not be used at angles of less than 30°.
Refer to Effect of Angle chart page 12.
** This is the smallest recommended connection hardware dia

Vermont Agency of Transportation
RECEIVED
Abutment Submittal 2 011215_Markup.pdf
CK'D BY CLB OK'D BY DRP
January 13, 2015
RESUBMIT NO Approved
BY C. CARLSON DATE 01/15/15

PERMALOC WIRE ROPE SLINGS

Lift-All Permaloc Slings are made using the flemish splice technique to form the eyes. Unlike the simple return loop method that places 100% of its strength on the swaged sleeve, *Permaloc* slings have reserve strength should the sleeve become damaged in use.

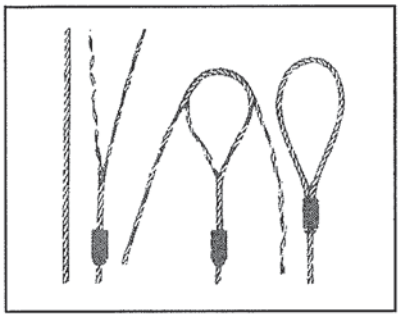

Features, Advantages and Benefits

Maintains all the basic *Lift-All* wire rope sling features plus ...

Promotes Safety

- Reserve strength - integrity of eyes not solely dependent upon steel sleeves
- IWRC resists crushing better than FC ropes

Saves Money

- When specified, thimble eyes protect wire rope from wear for increased life
- Good abrasion resistance for longer life

Permaloc With Single Part Body

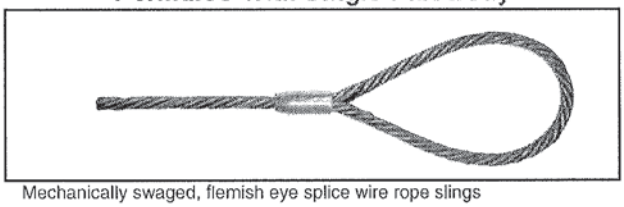

Mechanically swaged, flemish eye splice wire rope slings

IWRC (Independent Wire Rope Core) Fiber core available at reduced capacities

Wire Rope Class	Rope Dia. (in.)	EIP, IWRC [1] Rated Capacity (tons)* Vertical	Choker	V. Basket	[2] Min. Sling Length	Standard Eye Size (in.) W x L	Thimbled Eye Size (in.) W x L	Eye Hook Cap. (tons)	Crescent Thimble Eye Size (in.) W x L	Slip Thru Thimble Eye Size (in.) W x L	Sliding Choker Hook (in.)
6 x 19 EIP, IWRC	1/4	.65	.48	1.3	1' 6"	2 x 4	7/8 x 1 5/8	1	2 x 4	2 1/8 x 4 1/8	3/8
	5/16	1.0	.74	2.0	1' 9"	2 1/2 x 5	1 1/16 x 1 7/8	1	2 x 4	2 1/2 x 4 1/8	3/8
	3/8	1.4	1.1	2.9	2' 0"	3 x 6	1 1/8 x 2 1/8	1 1/2	2 x 4	2 1/2 x 4 1/8	3/8
	7/16	1.9	1.4	3.9	2' 3"	3 1/2 x 7	1 1/4 x 2 1/4	2	2 x 5	2 3/8 x 4 3/8	1/2
	1/2	2.5	1.9	5.1	2' 6"	4 x 8	1 1/2 x 2 3/4	3	2 1/4 x 6	2 3/8 x 4 3/8	1/2 **
	9/16	3.2	2.4	6.4	2' 9"	4 1/2 x 9	1 1/2 x 2 3/4	4 1/2	2 1/4 x 7	2 3/8 x 4 3/8	5/8
	5/8	3.9	2.9	7.8	3' 0"	5 x 10	1 3/4 x 3 1/4	4 1/2	2 3/4 x 7	3 3/8 x 6 5/8	5/8 **
	3/4	5.6	4.1	11	3' 6"	6 x 12	2 x 3 3/4	7	3 1/4 x 8 1/2	3 3/8 x 6 5/8	3/4 **
	7/8	7.6	5.6	15	4' 0"	7 x 14	2 1/4 x 4 1/4	11	4 1/2 x 10	3 3/4 x 7 1/8	7/8
	1	9.8	7.2	20	4' 6"	8 x 16	2 1/2 x 4 1/2	11	4 1/2 x 11 1/2	3 3/4 x 7 1/8	1
	1 1/8	12	9.1	24	5' 0"	9 x 18	2 7/8 x 5 1/8	15	4 7/8 x 13	4 3/8 x 8 3/8	1 1/8
							3 1/2 x 6 1/2	15	5 1/2 x 14 1/2	4 3/8 x 8 3/8	1 1/4
6 x 37 EIP, IWRC	1 3/8	18	13	36	6' 0"	11 x 22	3 1/2 x 6 1/4	22	6 x 16	5 x 9 1/2	1 3/8
	1 1/2	21	16	42	7' 0"	12 x 24	3 1/2 x 6 1/4	22	6 x 17 1/2	5 x 9 1/2	1 1/2**
	1 3/4	28	21	57	8' 0"	14 x 28	4 1/2 x 9	30	7 x 20	6 3/4 x 11 3/4	-
	2	37	28	73	9' 0"	16 x 32	6				
	2 1/4	44	35	89	10' 0"	18 x 36	7				
	2 1/2	54	42	109	11' 0"	20 x 40					

(4) 32' long wire rope

Used when lifting the wing walls and the retaining wall.

Note: Larger diameter slings available. Basket ratings are based on a minimum D/d of 25. See p

1. 1 Ton = 2,000 lbs.
2. Minimum sling length when using standard eyes.

Note: **Length Tolerances** - Single Part Wire Rope Slings - Standard length tolerance is plus or minus two rope diameters, or plus or minus 0.5% of the sling length, whichever is great

** See page 91 for reduced choker capacity when using these hook sizes.

Vermont Agency of Transportation
RECEIVED
Abutment Submittal 2 011215_Markup.pdf
CK'D BY CLB OK'D BY DRP
January 13, 2015
RESUBMIT NO Approved
BY C. CARLSON DATE 01/15/15

APPENDIX A4A

Crosby® Alloy Screw Pin Shackles

Load Rated®

"QT" QUENCHED & TEMPERED

QUIC-CHECK®

APPLICATION INSTRUCTIONS
SEE PAGE 89 OF THE GENERAL CATALOG

G-209A

G-209A Screw pin anchor shackles meet the performance requirements of Federal Specification RR-C-271F Type IVA, Grade B, Class 2, except for those provisions required of the contractor. For additional information, see page 444.

- Capacities 2 thru 21 metric tons. Meets performance requirements of Grade 8 shackles.
- Forged Alloy Steel – Quenched and Tempered, with alloy pins.
- Working Load Limit permanently shown on every shackle.
- Hot Dip Galvanized.
- Shackles can be furnished proof tested with certificates to designated standards, such as ABS, DNV, Lloyds, or other certification. Charges for proof testing and certification available when requested at the time of order.
- Approved for use at -40 degree C (-40 degree F) to 204 degree C (400 degree F).
- Meets or exceeds all requirements of ASME B30.26 including identification, ductility, design factor, proof load and temperature requirements. Importantly, these shackles meet other critical performance requirements including fatigue life, impact properties and material traceability, not addressed by ASME B30.26.

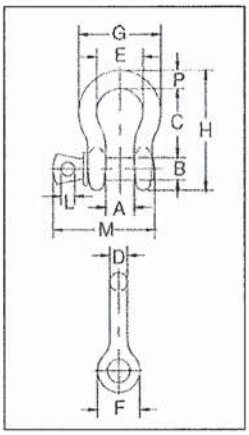

G-209A Crosby® Alloy Screw Pin Shackles

Nominal Size (in.)	Working Load Limit (t)*	G-209A Stock No.	Weight Each (lbs.)	Dimensions (in.) A	B	C	D	E	F	G	H	L	M	P	Tolerance +/- C	A
3/8	2	1017450	.31	.66	.44	1.44	.38	1.03	.91	1.78	2.49	.25	2.03	.38	.13	.06
7/16	2-2/3	1017472	.38	.75	.50	1.69	.44	1.16	1.06	2.03	2.91	.31	2.38	.44	.13	.06
1/2	3-1/3	1017494	.63	.81	.63	1.88	.50	1.31	1.19	2.31	3.28	.38	2.69	.50	.13	.06
5/8	5	1017516	1.38	1.06	.75	2.38	.63	1.69	1.50	2.94	4.19	.44	3.34	.69	.13	.06
3/4	7	1017538	2.35	1.25	.88	2.81	.75	2.00	1.81	3.50	4.97	.50	3.97	.81	.25	.06
7/8	9-1/2	1017560	3.61	1.44	1.00	3.31	.88	2.28	2.09	4.03	5.83	.50	4.50	.97	.25	.06
1	12-1/2	1017582	5.32	1.69	1.13	3.75	1.00	2.69	2.38	4.69	6.56	.56	5.07	1.06	.25	.06
1-1/8	15	1017604	7.25	1.81	1.25	4.25	1.16	2.91	2.69	5.16	7.47	.63	5.59	1.25	.25	.06
1-1/4	18	1017626	9.88	2.03	1.38	4.69	1.29	3.25	3.00	5.75	8.25	.69	6.16	1.38	.25	.06
1-3/8	21	1017648	13.25	2.25	1.50	5.25	1.42	3.63	3.31	6.38	9.16	.75	6.84	1.50	.25	.13

* Maximum Proof Load is 2 times the Working Load Limit (metric tons) and 2.2 times the Working Load Limit (short tons). Minimum Ultimate Strength is 4.5 times the Working Load Limit for metric tonnes, and 5 times the Working Load Limit for short tons. For Working Load Limit reduction due to side loading applications, see page 91.

Load Rated®

"QT" QUENCHED & TEMPERED

APPLICATION INSTRUCTIONS
SEE PAGE 89 OF THE GENERAL CATALOG

G-2169

S-2169

- Capacities of 7, 12.5 and 18 metric tons.
- Quenched and Tempered for maximum strength.
- Forged Alloy Steel.
- Available in galvanized and self colored finished.
- Individually proof tested and magnetic particle inspected. Crosby certification available at time of order.
- Meets or exceeds all requirements of ASME B30.26 including identification, ductility, design factor, proof load and temperature requirements. Importantly, these shackles meet other critical performance requirements including fatigue life, impact properties and material traceability, not addressed by ASME B30.26.
- Look for the Red Pin® . . . the mark of genuine Crosby quality.

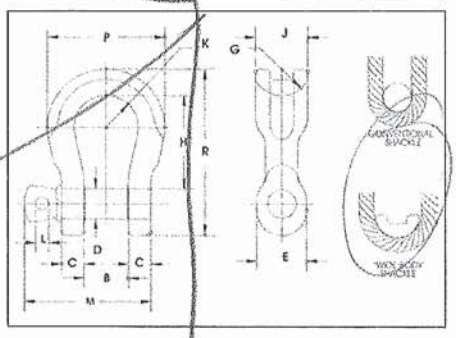

G-2169 / S-2169 Screw Pin "Wide Body" Shackles

Working Load Limit (t)*	G-2169 Stock No.	S-2169 Stock No.	Weight Each (lbs.)	Dime (i B +/- .25	C	D +/- .02	E	G	H
7	1021655	1021664	3.5	1.25	.69	.88	1.82	1.25	3.56
12.5	1021673	1021682	8.8	1.69	.92	1.13	2.38	1.37	4.63
18	1021691	1021699	13	2.03	1.16	1.38	2.69	1.50	5.81

* Ultimate Load is 5 times the Working Load Limit. Forged Alloy Steel. Proof Load is 2 times th

Vermont Agency of Transportation
RECEIVED
Abutment Submittal 2 011215_Markup.pdf
CK'D BY CLB OK'D BY DRP
January 13, 2015
RESUBMIT NO Approved
BY C. CARLSON DATE 01/15/15

APPENDIX A4 B

Crosby® Screw Pin Shackles

Load Rated® Fatigue Rated® QUENCHED & TEMPERED QUIC-CHECK® MAXTOUGH® TYPE APPROVED

SCREW PIN ANCHOR SHACKLES

G-209 / S-209

G-209 Screw pin anchor shackles meet the performance requirements of Federal Specification RR-C-271F Type IVA, Grade A, Class 2, except for those provisions required of the contractor. For additional information, see page 444.

- Capacities 1/3 thru 55 metric tons, grade 6.
- Forged - Quenched and Tempered, with alloy pins.
- Working Load Limit and grade "6" permanently shown on every shackle.
- Hot Dip galvanized or Self Colored.
- Fatigue rated.
- Shackles 25t and larger are **RFID EQUIPPED.**
- Shackles can be furnished proof tested with certificates to designated standards, such as ABS, DNV, Lloyds, or other certification. Charges for proof testing and certification available when requested at the time of order.
- Approved for use at -40 degree C (-40 degree F) to 204 degree C (400 degree F).
- 2t through 25t bow and screw pin are Certified to meet charpy impact testing of 42 joules (31 ft-lbs.) min. ave. at -20 degree C (-4 degree F).
- All shackles are Quenched and Tempered and can meet DNV impact requirements of 42 joules (31 ft. lbs.) at -20 degree C (-4 degree F).
- Meets or exceeds all requirements of ASME B30.26.
- Type Approval and certification in accordance with ABS 2006 Steel Vessel Rules 1-1-17.7, and ABS Guide for Certification of Cranes.
- Crosby 2t through 25t G209 anchor shackles are type approved to DNV Certification Notes 2.7-1 -Offshore Containers. These Crosby shackles are statistical proof and impact tested. The tests are conducted by Crosby and 3.1 test certification is available upon request.
- Look for the Red Pin® . . . the mark of genuine Crosby quality.

RFID EQUIPPED Crosby

SCREW PIN CHAIN SHACKLES

G-210 / S-210

G-210 Screw pin chain shackles meet the performance requirements of Federal Specification RR-C-271F, Type IVB, Grade A, Class 2, except for those provisions required of the contractor. For additional information, see page 444.

Shackles

G-209 / S-209 Screw Pin Anchor Shackles

G-209 / S-209

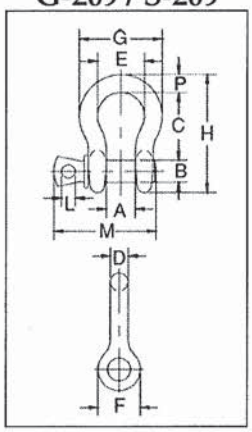

Nominal Size (in.)	Working Load Limit (t)*	Stock No. G-209	Stock No. S-209	Weight Each (lbs.)	Dimensions (in.) A	B	C	D	E	F	G	H	L	M	P	Tolerance + / - C	A
3/16	1/3	1018357	–	.06	.38	.25	.88	.19	.60	.56	.98	1.47	.16	1.14	.19	.06	.06
1/4	1/2	1018375	1018384	.10	.47	.31	1.13	.25	.78	.61	1.28	1.84	.19	1.43	.25	.06	.06
5/16	3/4	1018393	1018400	.18	.53	.38	1.22	.31	.84	.75	1.47	2.09	.22	1.71	.31	.06	.06
3/8	1	1018419	1018428	.31	.66	.44	1.44	.38	1.03	.91	1.78	2.49	.25	2.02	.38	.13	.06
7/16	1-1/2	1018437	1018446	.38	.75	.50	1.69	.44	1.16	1.06	2.03	2.91	.31	2.37	.44	.13	.06
1/2	2	1018455	1018464	.72	.81	.63	1.88	.50	1.31	1.19	2.31	3.28	.38	2.69	.50	.13	.06
5/8	3-1/4	1018473	1018482	1.37	1.06	.75	2.38	.63	1.69	1.50	2.94	4.19	.44	3.34	.69	.13	.06
3/4	4-3/4	1018491	1018507	2.35	1.25	.88	2.81	.75	2.00	1.81	3.50	4.97	.50	3.97	.81	.25	.06
7/8	6-1/2	1018516	1018525	3.62	1.44	1.00	3.31	.88	2.28	2.09	4.03	5.83	.50	4.50	.97	.25	.06
1	8-1/2	1018534	1018543	5.03	1.69	1.13	3.75	1.00	2.69	2.38	4.69	6.56	.56	5.13	1.06	.25	.06
1-1/8	9-1/2	1018552	1018561	7.41	1.81	1.25	4.25	1.16	2.91	2.69	5.16	7.47	.63	5.71	1.25	.25	.06
1-1/4	12	1018570	1018589	9.50	2.03	1.38	4.69	1.29	3.25	3.00	5.75	8.25	.69	6.25	1.38	.25	.06
1-3/8	13-1/2	1018598	1018605	13.53	2.25	1.50	5.25	1.42	3.63	3.31	6.38	9.16	.75	6.83	1.50	.25	.13
1-1/2	17	1018614	1018623	17.20	2.38	1.63	5.75	1.54	3.88	3.63	6.88	10.00	.81	7.33	1.62	.25	.13
1-3/4	25	1018632	1018641	27.78	2.88	2.00	7.00	1.84	5.00	4.19	8.86	12.34	1.00	9.06	2.25	.25	.13
2	35	1018650	1018669	45.00	3.25	2.25	7.75	2.08	5.75	4.81	9.97	13.68	1.22	10.35	2.40	.25	.13
2-1/2	55	1018678	1018687	85.75	4.13	2.75	10.50	2.71	7.25	5.69	12.87	17.84	1.38	13.00	3.13	.25	.25

G-210 / S-210 Screw Pin Chain Shackles

G-210 / S-210

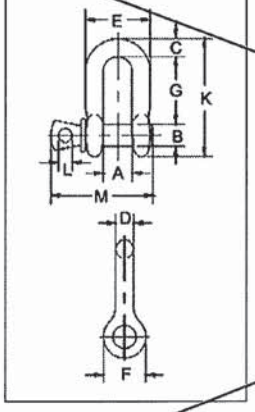

Nominal Size (in.)	Working Load Limit (t)*	Stock No. G-210	Stock No. S-210	Weight Each (lbs.)	Dimensions (in.) A	B	C	D	E	F	G	K	L	M	Tolerance + / - G	A
1/4	1/2	1019150	1019169	.11	.47	.31	.25	.25	.97	.62	.97	1.59	.19	1.43	.06	.06
5/16	3/4	1019178	1019187	.17	.53	.38	.31	.31	1.15	.75	1.07	1.91	.22	1.71	.06	.06
3/8	1	1019196	1019203	.28	.66	.44	.38	.38	1.42	.92	1.28	2.31	.25	2.02	.13	.06
7/16	1-1/2	1019212	1019221	.43	.75	.50	.44	.44	1.63	1.06	1.48	2.67	.31	2.37	.13	.06
1/2	2	1019230	1019249	.59	.81	.63	.50	.50	1.81	1.18	1.66	3.03	.38	2.69	.13	.06
5/8	3-1/4	1019258	1019267	1.25	1.06	.75	.63	.63	2.32	1.50	2.04	3.76	.44	3.34	.13	.06
3/4	4-3/4	1019276	1019285	2.63	1.25	.88	.81	.75	2.75	1.81	2.40	4.53	.50	3.97	.25	.06
7/8	6-1/2	1019294	1019301	3.16	1.44	1.00	.97	.88	3.20	2.10	2.86	5.33	.50	4.50	.25	.06
1	8-1/2	1019310	1019329	4.75	1.69	1.13	1.00	1.00	3.69	2.38	3.24	5.94	.56	5.13	.25	.06
1-1/8	9-1/2	1019338	1019347	6.75	1.81											
1-1/4	12	1019356	1019365	9.06	2.03											
1-3/8	13-1/2	1019374	1019383	11.63	2.25											
1-1/2	17	1019392	1019409	15.95	2.38											
1-3/4	25	1019418	1019427	26.75	2.88											
2	35	1019436	1019445	42.31	3.25											
2-1/2	55	1019454	1019463	71.75	4.12											

* NOTE: Maximum Proof Load is 2.0 times the Working Lo
Limit. For Working Load Limit reduction due to side loa

Copyright © 2013 The Crosby Group LLC
All Rights Reserved

Vermont Agency of Transportation
RECEIVED
Abutment Submittal 2 011215_Markup.pdf

CK'D BY CLB OK'D BY DRP

January 13, 2015

RESUBMIT NO Approved

BY C. CARLSON DATE 01/15/15

ALP LIFTING EYE - STANDARD

Designed as an attachment link for lifting and transport of precast concrete units in combination with the ALP Lifting Pin Anchor System. The Lifting Eye consists of a round body with a protruding lever arm and a high strength bail. The body has a "T" slot that engages the head of a Lifting Pin Anchor. The rotation capabilities allow the lifting eye to stay oriented in the direction of loading without binding up.

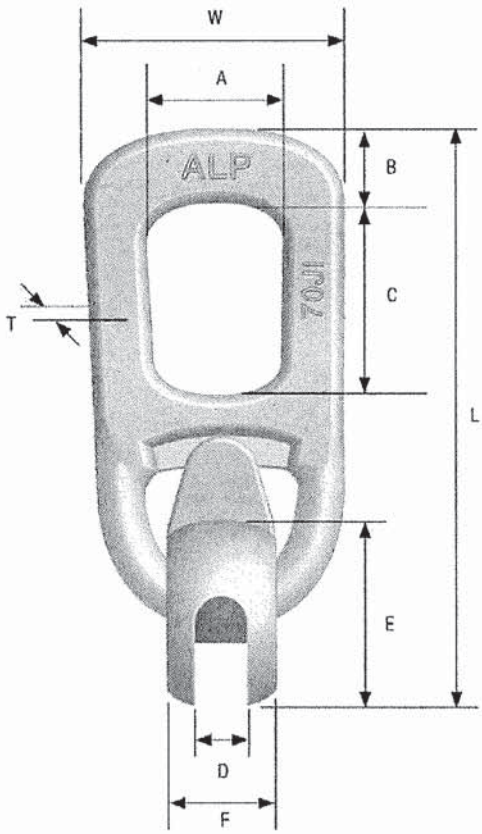

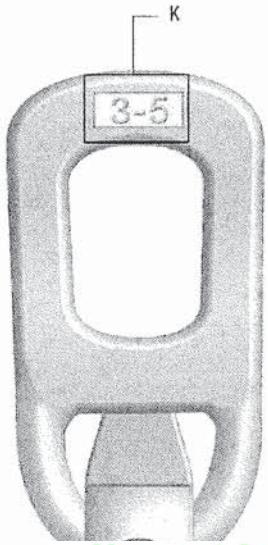

Vermont Agency of Transportation
RECEIVED
Abutment Submittal 2 011215_Markup.pdf
CK'D BY CLB OK'D BY DRP
January 13, 2015
RESUBMIT NO Approved
BY C. CARLSON DATE 01/15/15

Part Number	Description / Capacity	Weight Each (lbs)	L	W	T	A	B	C	D	E	F	K Load Range (Tons)	Ultimate Capacity in Tension (lbs)
LPLE1T	Lifting Eye for 1T, 1.3T Anchors	2.20	7-11/32"	3"	1/2"	1-3/4"	7/8"	2-3/4"	15/32"	2-1/8"	1-5/16"	1-1.3	13,000
LPLE2T	Lifting Eye for 1.5T, 2T, 2.5T Anchors	3.60	9"	3-1/2"	5/8"	2-1/8"	1"	3-3/8"	11/16"	2-9/16"	1-5/8"	1.5-2.5	25,000
LPLE4T	Lifting Eye for 3T, 4T, 5T Anchors	7.65	11"	4-11/16"	11/16"	2-5/8"	1-15/32"	3-7/16"	29/32"	3-3/8"	2-1/4"	3-5	50,000
LPLE8T	Lifting Eye for 6T, 8T, 10T Anchors	21.70	15-1/2"	6-1/4"	1-1/16"	3-1/8"	2"	4-3/8"	1-1/4"	4-1/2"	2-15/16"	6-10	100,000
LPLE20T	Lifting Eye for 12T, 16T, 20T Anchors	39.00	20"	7-11/16"	1-3/8"	4-3/8"	2-13/16"	5-15/16"	1-11/16"	5-5/8"	4-3/8"	12-20	200,000

Rated load has a 5:1 safety factor.

Used with abutments and retaining wall footing.

APPENDIX B1

OXFORD Industrial Technologies, LLC

PO Box 736 • Stevenson, CT 06491
www.oxfordtechusa.com
Phone: (203) 268-6030
Fax: (203) 445-1240
info@oxfordtechusa.com

Oxford Lift System®

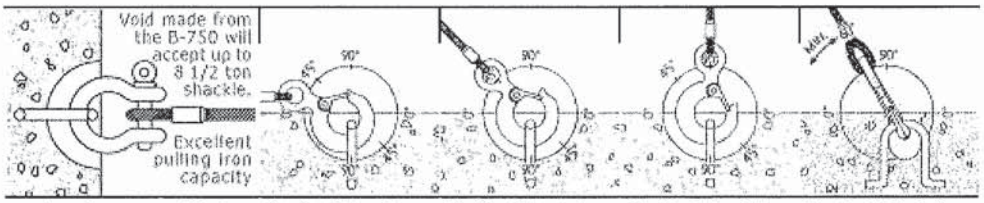

Anchor Product Code	Slab Min. Inches	Safe Working Load @ 90 degree Shear-0 degree Pull	Safe Working Load @ 90 degree Shear-45 degree Pull	Safe Working Load @ 90 degree Tension-90 degree Pull	Safe Working Load @ 90 degree Shear-60 degree Pull
A 500-3	4.00"	4,500	4,000	3,500	4,000
A 500-4	5.00"	8,000	5,500	4,000	5,000
A 500-5	6.00"	10,500	6,500	5,000	5,500
A 750-5	6.00"	12,500	8,000	7,000	7,000
A 750-7	8.00"	15,000	12,500	10,000	10,000

Note: Safe Working Load provides a factor of safety of approximately 4:1
Test Results are based on a minimum concrete compressive strength of 4,000 psi.

Used for the wing walls.

<back next>

Home | B-500 & B-750 | S-150 | S-300 | Lift Anchor & Order Form | Concrete Products
Pull Iron Capacity | Anchors & Accessories | Toggle-Lok | Insert/Lift Anchor | Grid-Lok/ Rebar Chair | Helpful Calculations COMING SOON!

Vermont Agency of Transportation
RECEIVED
Abutment Submittal 2 011215_Markup.pdf

CK'D BY CLB OK'D BY DRP

January 13, 2015

RESUBMIT NO Approved

BY C. CARLSON DATE 01/15/15

ALP LIFTING PIN ANCHORS

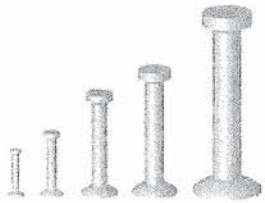

All ALP Lifting Pins are manufactured using high strength steel with hot forged ends. The head design provides uniform engagement with the Lifting Eye, and the large forged anchor "foot" is embedded in the concrete to create the lifting capacity. Safe Working Loads (SWL) displayed in the below chart apply to loading in any direction. These Lifting Pin Anchors are designed to meet the OSHA requirements of a 4 to 1 Safety Factor.

Standard Finish is Hot-Dipped Galvanized

				In Concrete Capacities 4:1 SWL									
Part Number	Ton	Length (in.)	Weight Per Piece (lbs)	Min. Slab Thickness (in.)	1500 PSI (lbs)	2000 PSI (lbs)	2500 PSI (lbs)	3000 PSI (lbs)	3500 PSI (lbs)	4000 PSI (lbs)	4500 PSI (lbs)	5000 PSI (lbs)	Min. Edge Distances (in.)
LPA1T258G	1T	2-5/8"	0.14	3-1/2"	1,415	1,630	1,825	2,000	2,000	2,000	2,000	2,000	6"
LPA1T338G	1T	3-3/8"	0.16	5"	1,820	2,000	2,000	2,000	2,000	2,000	2,000	2,000	7"
LPA1T434G	1T	4-3/4"	0.21	6"	2,000	2,000	2,000	2,000	2,000	2,000	2,000	2,000	8"
LPA2T234G	2T	2-3/4"	0.32	4"	1,375	1,585	1,775	1,940	2,100	2,245	2,380	2,510	6"
LPA2T338G	2T	3-3/8"	0.35	5"	2,710	3,130	3,500	3,830	4,000	4,000	4,000	4,000	7"
LPA2T434G	2T	4-3/4"	0.45	6"	3,500	4,000	4,000	4,000	4,000	4,000	4,000	4,000	10"
LPA2T512G	2T	5-1/2"	0.48	7"	4,000	4,000	4,000	4,000	4,000	4,000	4,000	4,000	12"
LPA2T634G	2T	6-3/4"	0.58	8"	4,000	4,000	4,000	4,000	4,000	4,000	4,000	4,000	12"
LPA2T11G	2T	11"	0.85	12-1/2"	4,000	4,000	4,000	4,000	4,000	4,000	4,000	4,000	18"
LPA4T3G	4T	3"	0.73	4"	1,950	2,250	2,515	2,755	2,975	3,180	3,375	3,555	6"
LPA4T312G	4T	3 1/2"	0.82	5"	2,815	3,255	3,640	3,985	4,305	4,600	4,880	5,145	10"
LPA4T334G	4T	3-3/4"	0.85	5"	3,250	3,755	4,200	4,600	4,965	5,310	5,635	5,940	10"
				8"	4,225	4,880	5,460	5,980	6,460	6,905	7,325	7,720	12"*
LPA4T414G	4T	4-1/4"	0.91	6"	3,845	4,445	4,965	5,440	5,880	6,285	6,665	7,025	10"
LPA4T434G	4T	4-3/4"	0.98	6"	4,445	5,130	5,740	6,285	6,790	7,260	7,700	8,000	10"
				10"	5,420	6,260	7,000	7,665	8,000	8,000	8,000	8,000	14"*
LPA4T512G	4T	5-1/2"	1.08	7"	4,840	5,590	6,250	6,850	7,400	7,910	8,000	8,000	12"
LPA4T718G	4T	7-1/8"	1.32	9"	6,710	8,000	8,000	8,000	8,000	8,000	8,000	8,000	13"
LPA4T912G	4T	9-1/2"	1.60	11"	8,000	8,000	8,000	8,000	8,000	8,000	8,000	8,000	16"
LPA8T434G	8T	4-3/4"	2.15	6-1/2"	4,185	4,835	5,405	5,925	6,400	6,840	7,255	7,645	10"
LPA8T634G	8T	6-3/4"	2.50	8"	7,025	8,110	9,070	9,935	10,730	11,475	12,170	12,825	14"
				14"	9,715	11,215	12,540	13,740	14,840	15,865	16,000	16,000	21"*
LPA8T[illegible]									16,000	16,000	16,000	16,000	18"
LPA8T1338G	8T	13-3/8	4.25	15	16,000	16,000	16,000	16,000	16,000	16,000	16,000	16,000	22"
LPA8T2634G	8T	26-3/4"	7.90	29"	16,000	16,000	16,000	16,000	16,000	16,000	16,000	16,000	36"
LPA20T10G	20T	10"	8.25	11-1/2"	11,960	13,810	15,440	16,915	18,270	19,530	20,715	21,835	20"
				20"	16,970	19,595	21,910	24,000	25,920	27,710	29,295	30,985	24"*
LPA20T1934G	20T	19-3/4"	13.50	22"	28,000	32,328	36,145	39,595	40,000	40,000	40,000	40,000	36"

Used for the abutments and the retaining wall footing.

- Shaded area indicates the capacity in concrete is limited by the mechanical capacity of the anchor

- The Safety Factor for the listed loads is approximately 4 to 1 in normal weight concrete (145-150PCF)
- Loads are based on normal anchor recess dimensions: 1T: 5/16"; 2T: 7/16"; 8T, 10T, 16T and 20T: 9/16"
- Loads are listed at varying concrete strengths (PSI) to accommodate varying conditions at time of loading
- *Concrete thickness exceeding the listed minimums may increase the listed capacity. Example: the 20Tx10 normal slab. These capacity gains are only obtained with the 4T x 3-3/4", 4T x 4-3/4", 8/10T x 6-3/4" and
- Proper rigging and all lifting angle load magnifications are to be used to determine actual applied loads
- Minimal reinforcement required to achieve above load values

Vermont Agency of Transportation
RECEIVED
Abutment Submittal 2 011215_Markup.pdf

CK'D BY CLB OK'D BY DRP
January 13, 2015
RESUBMIT NO Approved
BY C. CARLSON DATE 01/15/15

APPENDIX B3

Eric Barendse

From: Skip Francies <SkipFrancies@alpatterson.com>
Sent: Monday, December 01, 2014 3:09 PM
To: Eric Barendse
Cc: John Ems
Subject: Go!

I have established the minimum capacity with the anchor 6" in and 24" from the end.
The capacity is 17,300# verse your 16,750# at 4500psi. You have 5000psi.
Be sure the anchors are placed inside of the perimeter reinforcement.

Yes, we have nmb Splice Sleeves.
Best Regards,

Skip Francies, FPCI
A.L. Patterson Inc.
President Precast Supply Division
T: 215-310-2128
C: 813-230-8266
F: 215-310-2129
E: skipf@alpatterson.com

Verification that the 20T lift can be placed at 6" from the toe edge of the retaining wall.

Your Single Source Supplier!

Vermont Agency of Transportation
RECEIVED
Abutment Submittal 2 011215_Markup.pdf

CK'D BY CLB OK'D BY DRP

January 13, 2015

RESUBMIT NO Approved

BY C. CARLSON DATE 01/15/15