S.D. Ireland Companies
Precast Division

193 Industrial Ave. Williston, VT 05495
P.O. Box 2286 South Burlington, VT 05407
p: 802-863-6222 f: 802-860-1528
www.sdireland.com

Attention:	Brian Richardson	Date:	12/8/2014
Company:	C.C.S. Constructors	Job Name:	Stowe BRF 0235(11)
Address:	138 Munson Ave	Job Number:	#15163
City, St, Zip:	Morrisville, VT 05661	Regarding:	Abutment, Wing Wall, and Retaining Wall Submittal #1
Ph: / Fax:	802-888-7701		

WE ARE SENDING:

- [ ] Quote
- [x] Details
- [ ] Other: _____
- [x] Submittals
- [ ] Prints
- [ ] Plans
- [ ] Specifications
- [ ] Copy Of Letter
- [ ] Change Order
- [ ] Samples
- [ ] Revised Submittals

Copies	Date	Pages	Description
1	12/8/2014	1	Transmittal Cover Page
1	12/3/2014	11	S.D.I. Abutment, Wing Wall, and Approach Slab Drawings
1	12/3/2014	5	Dimension Fabricators Reinforcement Drawings
1	5/23/2014	1	State Concrete Mix Design
1		2	Pile Sleeve and Tension Sleeve details
1		3	Post Tensioning Material details
1		5	Splice Sleeve Details
1		1	Bearing Shim Details
1	12/8/2014	12	Lifting Analysis Calculations and details

These Are Submitted as Checked Below:

- [x] For Approval
- [ ] Approved as Submitted
- [ ] Resubmit __ Copies for Approval
- [x] For Your Use
- [ ] Approved as Noted
- [ ] Submit__ Copies for Distribution
- [ ] As Requested
- [ ] Returned for Corrections
- [ ] Return __ Corrected Prints
- [ ] For Review and Comment
- [ ] Prints Returned After Loan to Us
- [ ] For Bids Due: _____
- [ ] Other:

Notes/Remarks:

Brian,

Please pass on to the state for approvals. Page 6, page 10, and page 11 all have clouded areas indicating bar interference that the state will have to provide direction for us.

Let me know if you have any questions.

Thank you.

Eric Barendse x265

Copy To: _____

Signed: Eric Barendse

If enclosures are not as noted, kindly notify us at once.

No Abutment and Wingwall weight calculations provided. Please verify these weights. All seemed reasonable, except Wingwall #3 appears to have been calculated incorrectly. Should be similar to Wingwall #1 since the same dimensions with exception of the slight elevation differences.

Precast Bridge Abutments

Stowe BRF 0235(II)

Vermont Agency of Transportation
RECEIVED
Abutment_WingWall_RetainingWall Submittal 1 120814_Resubmit 12.22.14.pdf

CK'D BY CLB OK'D BY DRP

December 9, 2014

RESUBMIT YES --------
BY C. CARLSON DATE 12/22/14

Concrete:

Mix Designation: P50TER

1. Specified Mix Design	5000 PSI
2. Proposed Mix Design	5000 PSI
3. Striping Strength	3000 PSI
4. Handling Strength	3000 PSI
5. Shipping Strength	5000 PSI
6. Install Strength	5000 PSI
7. Traffic Loading	5000 PSI

Release strengths should be 85% of design strength which is 4250 psi

Fabrication Tolerances:

1. Width	±1/4"
2. Height	±1/4"
3. Length	±1/2"
4. Rebar Cover	3" Min. (Unless Noted Otherwise)
5. Rebar Spacing	±1"
6. Rebar Clearance	±1/4"
7. Insert Placement	±1/4"

Reminder that SD Ireland needs to supply contractor with 3 splice grout couplers and rebar so that contractor can assemble and submit to lab for testing

chamfer exposed edges

Reinforcing:

couplers to be epoxy coated

General Notes:

1. Reinforcing Steel - ASTM A615, Grade 60, Level II, Dual Coated
2. Materials and Manufacturing shall conform to ASTM C1433
3. Bar tied at every intersection.

Tolerances:

1. Spacing ±1"
2. Clearance ±1/4"
3. Clear Cover 3" U.N.O.

Lap Lengths:

1. Per AASHTO 5.11.2.1.1 & 5.11.5.3.1
   Lap Length for Level II (Dual Coated):
   #4 Bar=17"
   #5 Bar=26"
   #6 Bar=39"
   #7 Bar=53"
   #8 Bar=69"

On plans this is shown as 2'7"

General Notes:

1. All precast pieces will be dry fit prior to shipping.
2. All lifting anchor points to be grouted after use.

Post Tensioning

1. All anchoring assemblies will be galvanized plated.
2. Two tensioning strands per duct.
3. Tension ducts will be 3" SCH 40 PVC conduit.
4. Post tension strands will be .5"Ø, 270 ksi, low relaxation, 7-wire strands.
5. Strands will be tensioned to 32 kips prior to the H-pile sleeves being filled with HPC.
6. Tensioning block outs to be filled with grout after tensioning is complete

a grout of vertical overhead repair material since these are on a vertical surface

HPC RS

All chairs shall have same coating as rebar or plastic

CONTRACTORS VTSPE:	PRECAST CONCRETE ABUTMENT SHOP DRAWINGS (SDI JOB #15163)		INSTALLER: CCS Construction 138 Munson Ave Morrisville, VT 05661 PH: 802-888-7701	FABRICATOR: 193 INDUSTRIAL AVE. WILLISTON, VT 05495 Ph: (802) 658-0201 SD Ireland Precast Division	
	SUPERVISOR: M. WHEELER DETAILER: I. ADAMS CHECKER: E. Barendse ENGINEER:	PROJECT NAME: Stowe BRF 0235 (II) PROJECT #: 0235 (II) LOCATION: Stowe, VT	12/03/14	Abutment Text	1 of 11

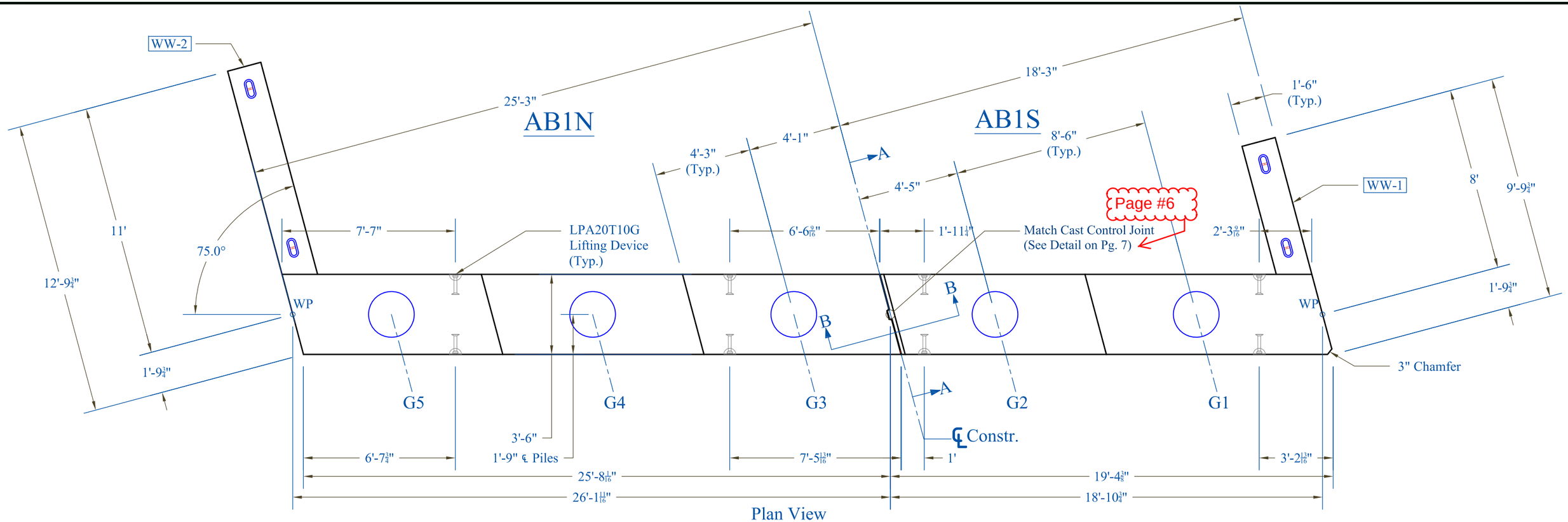

Plan View

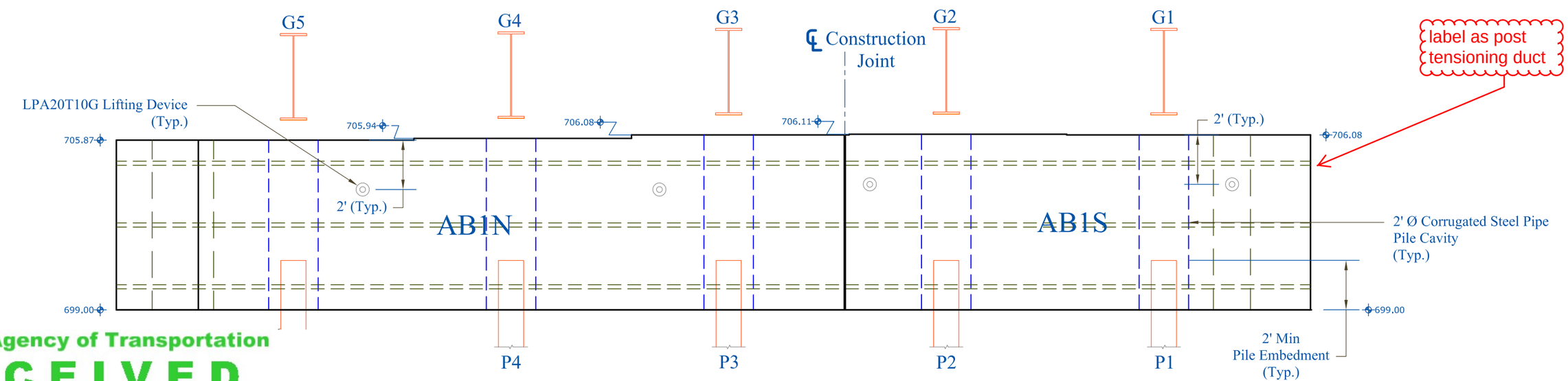

Elevation View

AB1N: 84,300 lbs.
AB1S: 63,000 lbs

Vermont Agency of Transportation
RECEIVED
Abutment_WingWall_RetainingWall Submittal 1 120814_Resubmit 12.22.14.pdf

CK'D BY CLB OK'D BY DRP

December 9, 2014

RESUBMIT NO Approved AsNoted

BY C. CARLSON DATE 12/22/14

PRECAST CONCRETE ABUTMENT SHOP DRAWINGS (SDI JOB #15163)			
SUPERVISOR: M. WHEELER DETAILER: I. ADAMS CHECKER: E. Barendse ENGINEER:	PROJECT NAME: Stowe BRF 0235 (II) PROJECT #: 0235 (II) LOCATION: Stowe, VT	INSTALLER: CCS Construction 138 Munson Ave Morrisville, VT 05661 PH: 802-888-7701	FABRICATOR: 193 INDUSTRIAL AVE. WILLISTON, VT 05495 Ph: (802) 658-0201 SD Ireland Precast Division
		12/03/14	Abutment 1 — 2 of 11

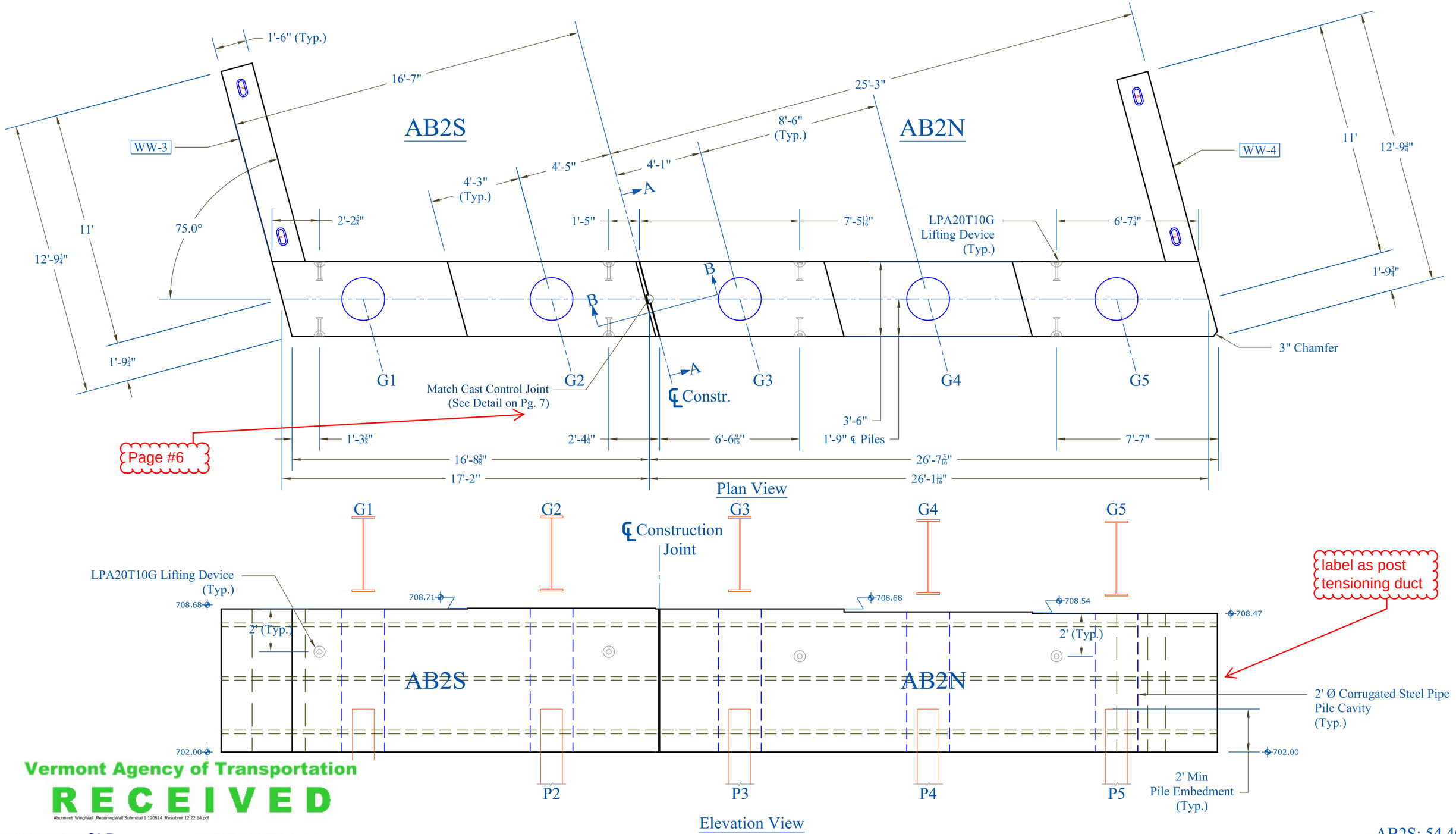

Vermont Agency of Transportation

RECEIVED

Abutment_WingWall_RetainingWall Submittal 1 120814_Resubmit 12.22.14.pdf

CK'D BY CLB OK'D BY DRP

December 9, 2014

RESUBMIT NO Approved AsNoted

BY C. CARLSON DATE 12/22/14

AB2S: 54,400 lbs.
AB2N: 79,500 lbs

PRECAST CONCRETE ABUTMENT SHOP DRAWINGS (SDI JOB #15163)				
SUPERVISOR: M. WHEELER DETAILER: I. ADAMS CHECKER: E. Barendse ENGINEER:	PROJECT NAME: Stowe BRF 0235 (II) PROJECT #: 0235 (II) LOCATION: Stowe, VT	INSTALLER: CCS Construction 138 Munson Ave Morrisville, VT 05661 PH: 802-888-7701	FABRICATOR: 193 INDUSTRIAL AVE. WILLISTON, VT 05495 Ph: (802) 658-0201 SD Ireland Precast Division	
		12/03/14	Abutment 2	3 of 11

Vermont Agency of Transportation

RECEIVED

Abutment_WingWall_RetainingWall Submittal 1 120814_Resubmit 12.22.14.pdf

CK'D BY CLB OK'D BY DRP

December 9, 2014

RESUBMIT NO Approved

BY C. CARLSON DATE 12/22/14

WW2: Plan View

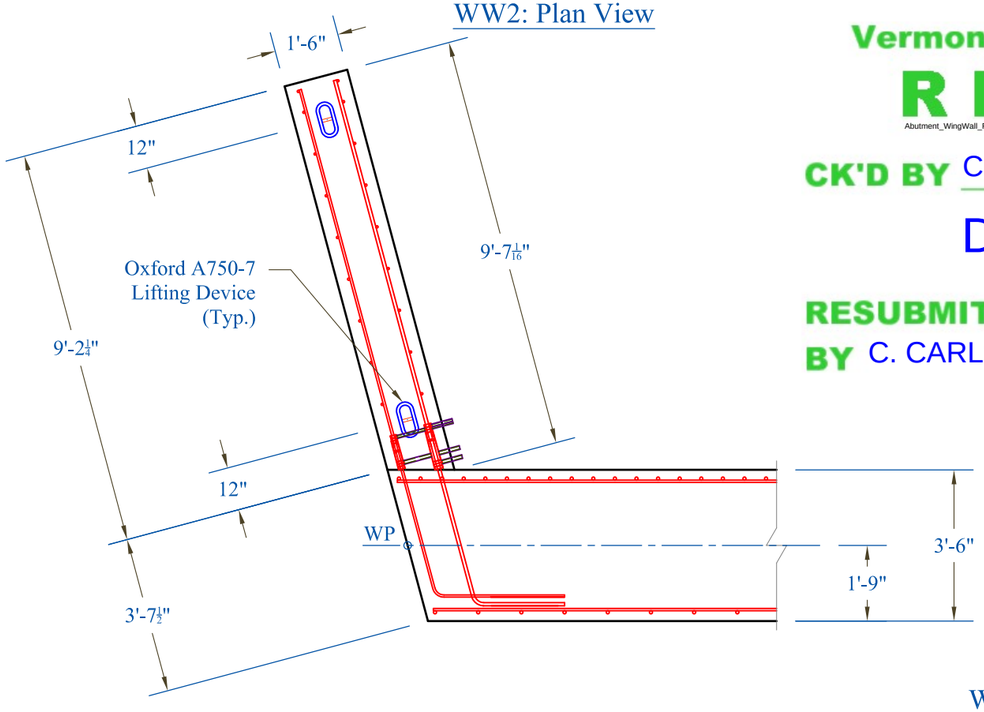

Weight: 9,450 lbs.

WW1: Plan View

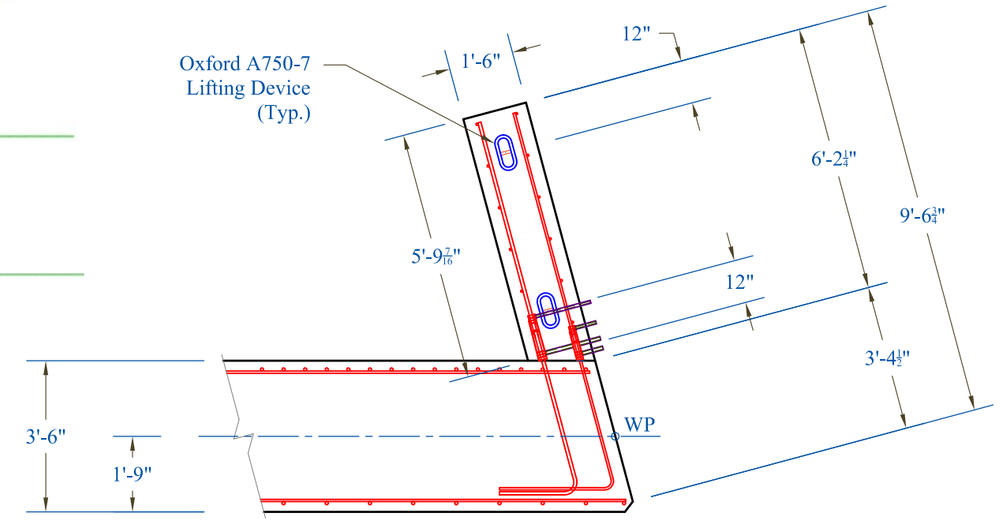

Weight: 9,400 lbs.

WW2: Elevation View

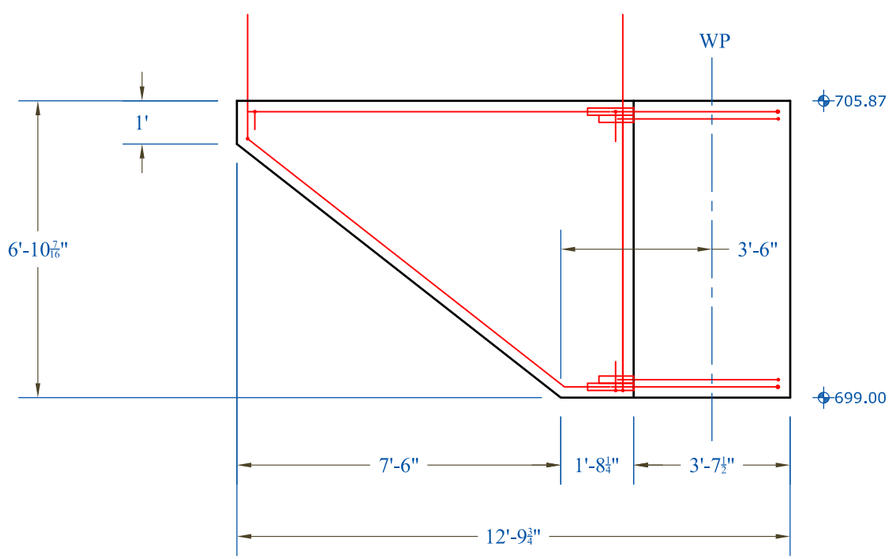

WW1: Elevation View

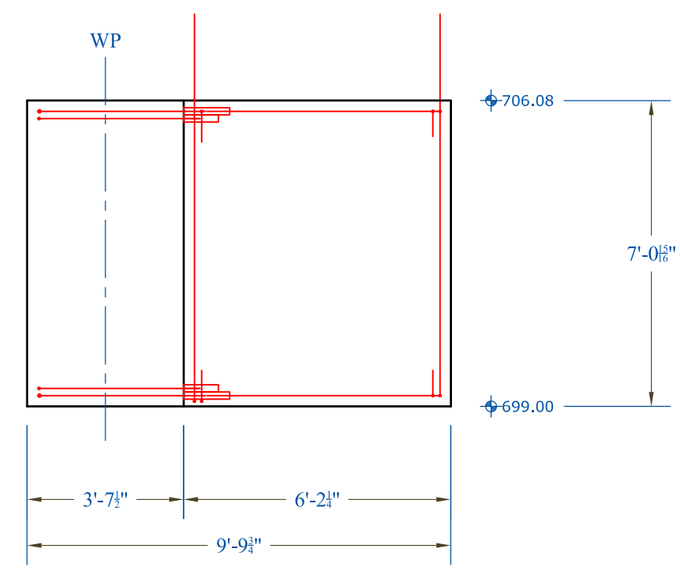

CONTRACTORS VTSPE:	PRECAST CONCRETE ABUTMENT SHOP DRAWINGS (SDI JOB #15163)	INSTALLER: CCS Construction 138 Munson Ave Morrisville, VT 05661 PH: 802-888-7701	FABRICATOR: 193 INDUSTRIAL AVE. WILLISTON, VT 05495 Ph: (802) 658-0201 SD Ireland Precast Division
	SUPERVISOR: M. WHEELER DETAILER: I. ADAMS CHECKER: E. Barendse ENGINEER:	PROJECT NAME: Stowe BRF 0235 (II) PROJECT #: 0235 (II) LOCATION: Stowe, VT	12/03/14 — Wingwalls 1 & 2 — 4 of 11

WW3: Plan View

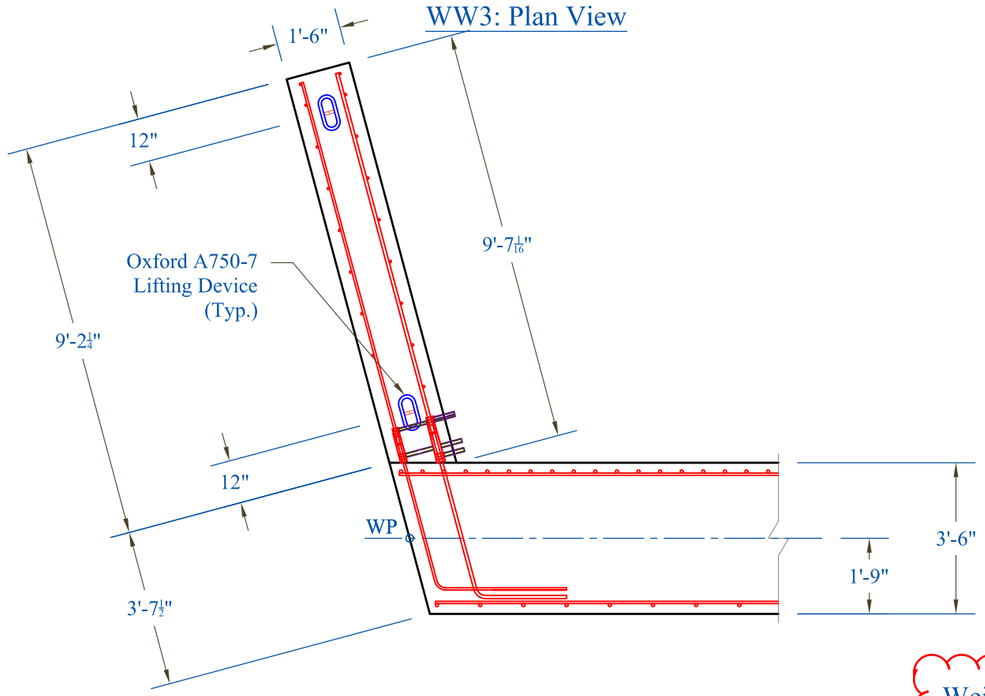

Verify this weight, appears low. Should be similar to Wingwall #1 since same dimensions except for height elevations.

Weight: 7,400 lbs.

WW4: Plan View

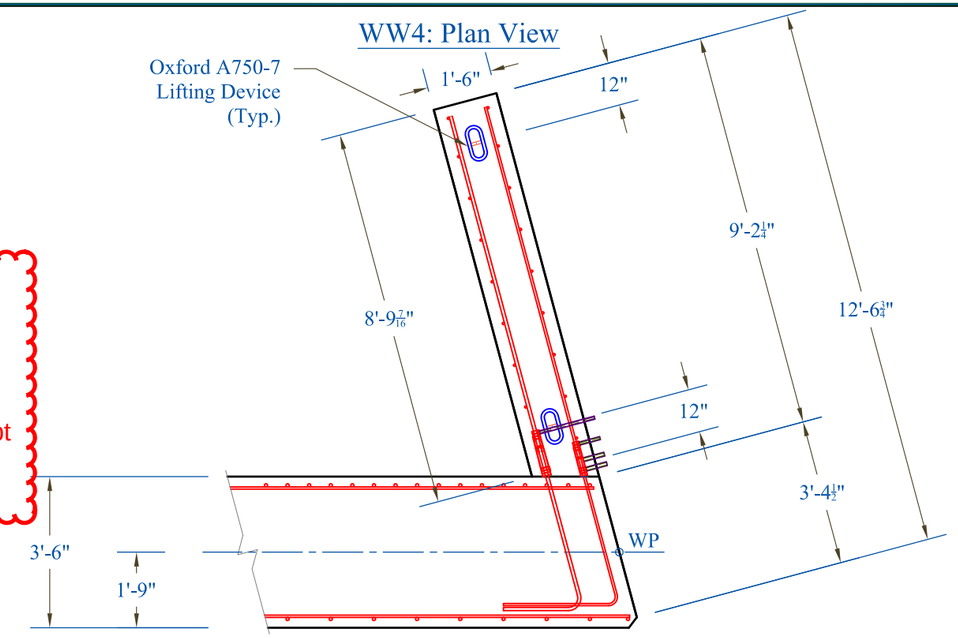

Weight: 8,800 lbs.

WW3: Elevation View

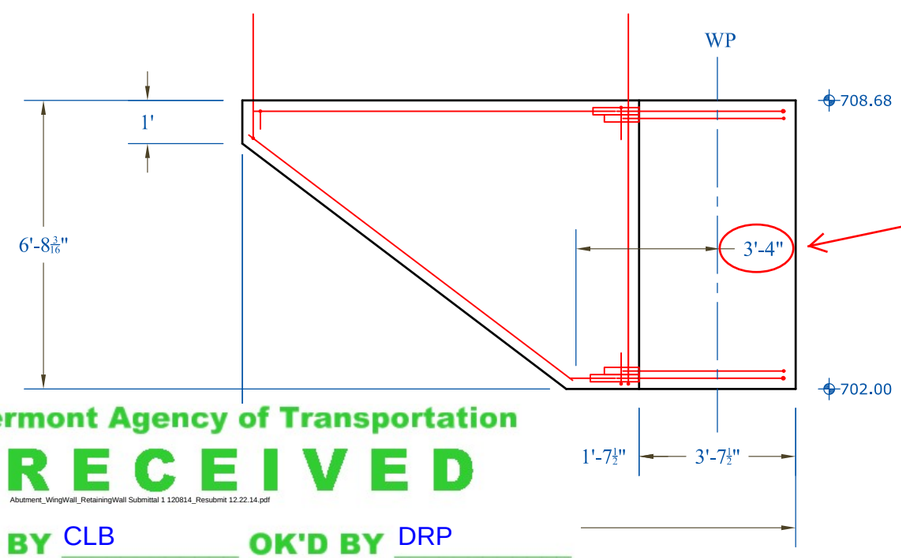

Should be 3'-6". Dimension line does not appear to extend to the corner.

WW4: Elevation View

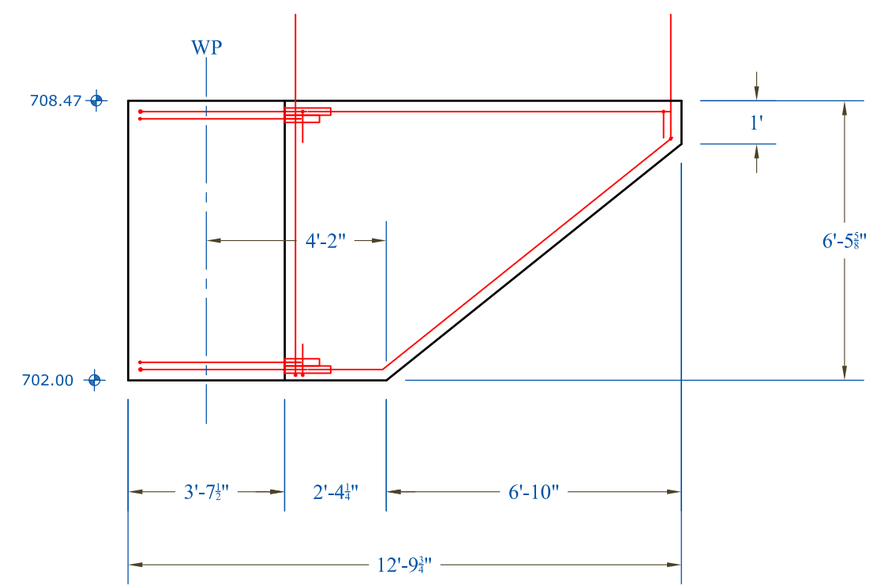

Vermont Agency of Transportation

RECEIVED

Abutment_WingWall_RetainingWall Submittal 1 120814_Resubmit 12.22.14.pdf

CK'D BY CLB OK'D BY DRP

December 9, 2014

RESUBMIT YES --------

BY C. CARLSON DATE 12/22/14

PRECAST CONCRETE ABUTMENT SHOP DRAWINGS (SDI JOB #15163)		INSTALLER: CCS Construction 138 Munson Ave Morrisville, VT 05661 PH: 802-888-7701	FABRICATOR: 193 INDUSTRIAL AVE. WILLISTON, VT 05495 Ph: (802) 658-0201 SD Ireland Precast Division
SUPERVISOR: M. WHEELER DETAILER: I. ADAMS CHECKER: E. Barendse ENGINEER:	PROJECT NAME: Stowe BRF 0235 (II) PROJECT #: 0235 (II) LOCATION: Stowe, VT	12/03/14	Wingwalls 3 & 4 — 5 of 11

Match Cast Joint Detail

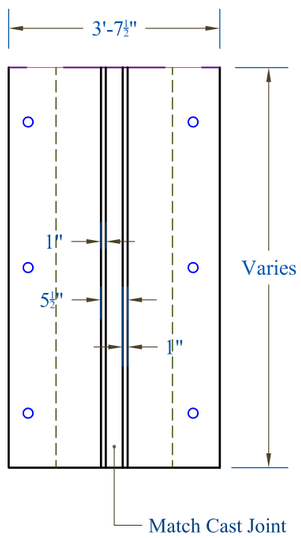

Abutment Face: A-A

Please provide more dimensions on the key

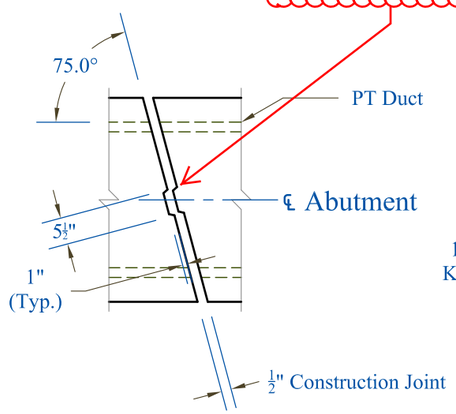

Plan View

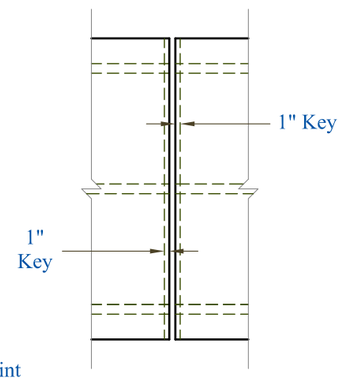

Section View: B-B

Abutment 1 & 2: Typical Section

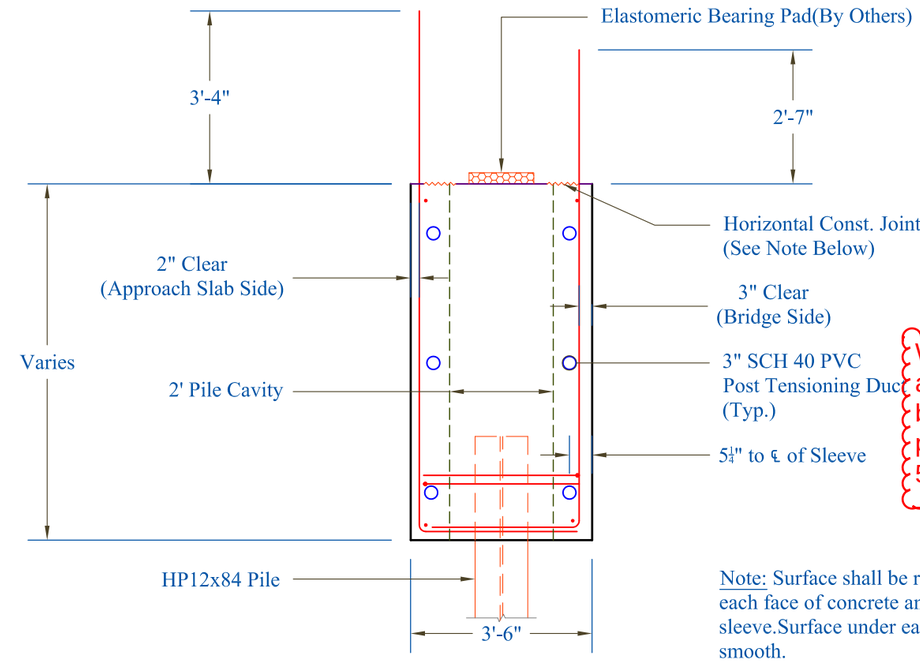

What is the amplitude? Should be 1/4"-1/2" deep per VTrans std 501.00.

Note: Surface shall be roughened to within 3" of each face of concrete and 3" from H-pile sleeve.Surface under each bearing pad shall be smooth.

Wingwall Grout Sleeve Detail

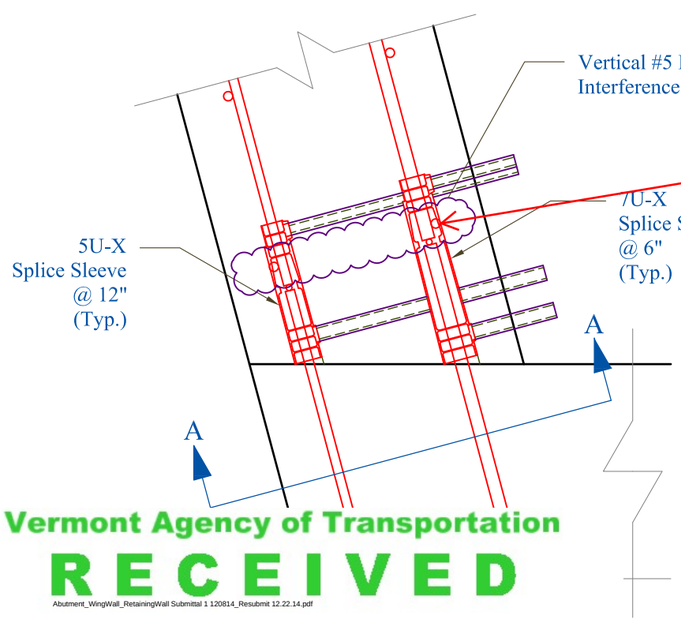

verticals can be moved in between couplers to avoid

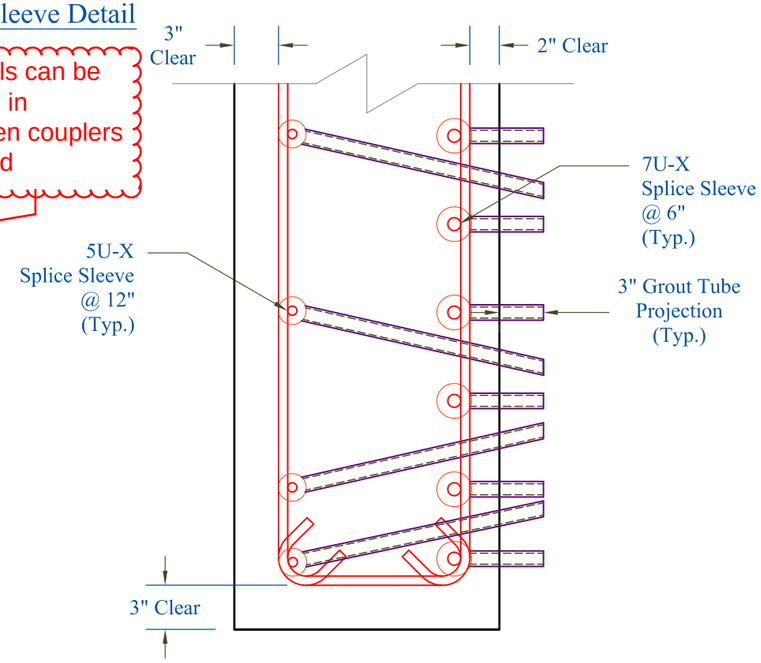

End Section View: A-A

Wingwall 1 - 4: Typical Section

#5

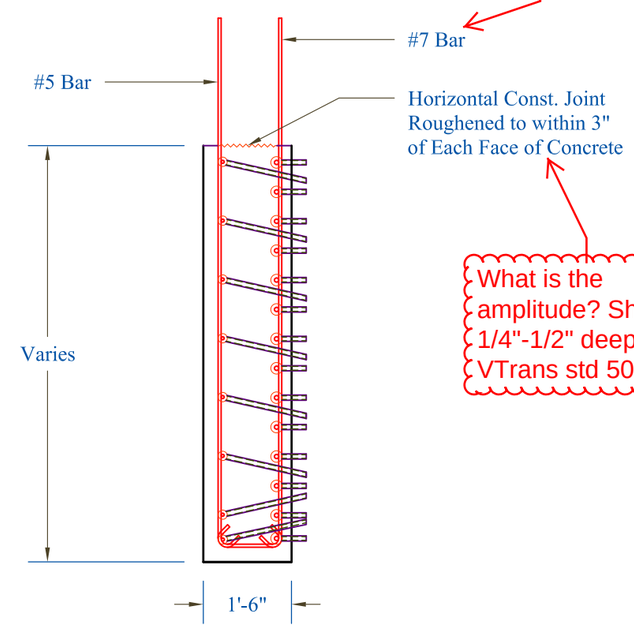

What is the amplitude? Should be 1/4"-1/2" deep per VTrans std 501.00.

Vermont Agency of Transportation
RECEIVED
Abutment_WingWall_RetainingWall Submittal 1 120814_Resubmit 12.22.14.pdf

CK'D BY CLB OK'D BY DRP

December 9, 2014

RESUBMIT YES --------

BY C. CARLSON DATE 12/22/14

PRECAST CONCRETE ABUTMENT SHOP DRAWINGS (SDI JOB #15163)		INSTALLER: CCS Construction 138 Munson Ave Morrisville, VT 05661 PH: 802-888-7701	FABRICATOR: 193 INDUSTRIAL AVE. WILLISTON, VT 05495 Ph: (802) 658-0201 SD Ireland Precast Division
SUPERVISOR: M. WHEELER DETAILER: I. ADAMS CHECKER: E. Barendse ENGINEER:	PROJECT NAME: Stowe BRF 0235 (II) PROJECT #: 0235 (II) LOCATION: Stowe, VT	12/03/14	Wing Wall & Abutment Details — 6 of 11

Retaining Wall Elevation

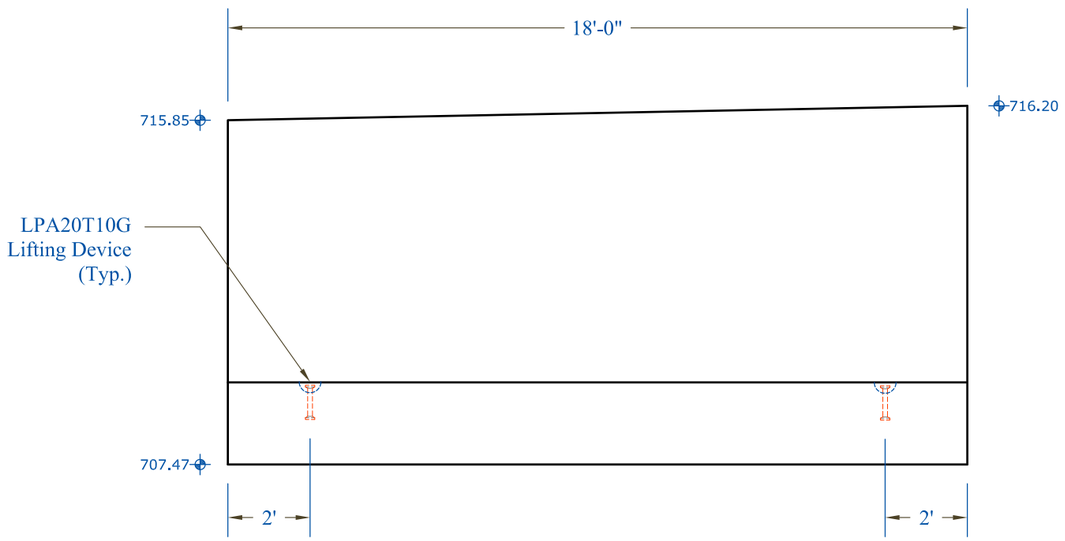

Retaining Wall Typical Section

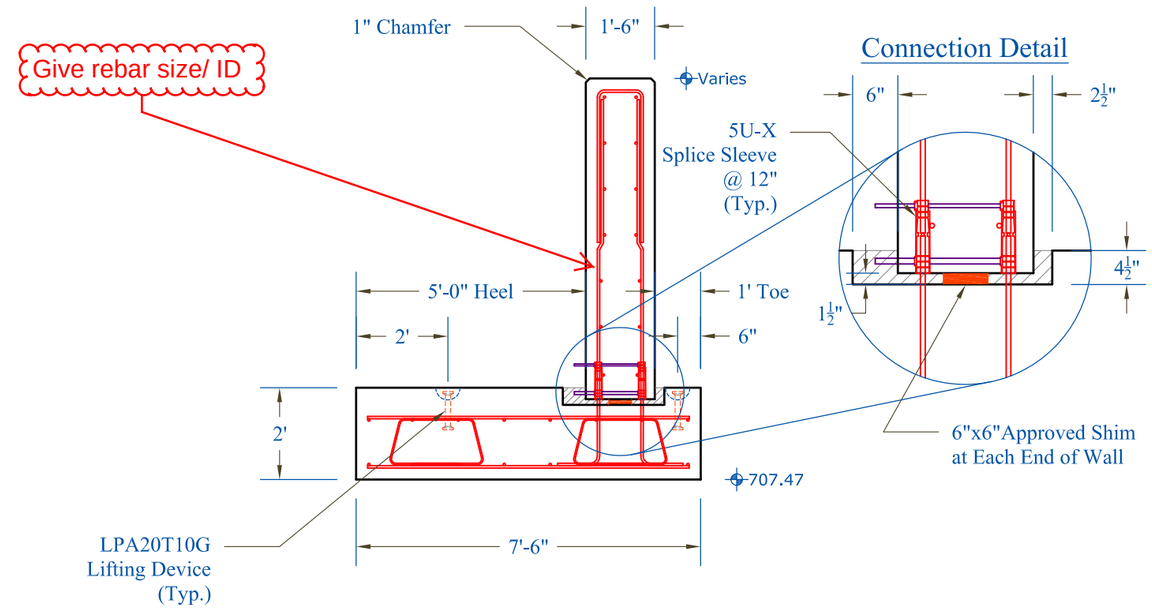

Retaining Wall Stem

Retaining Wall Footing

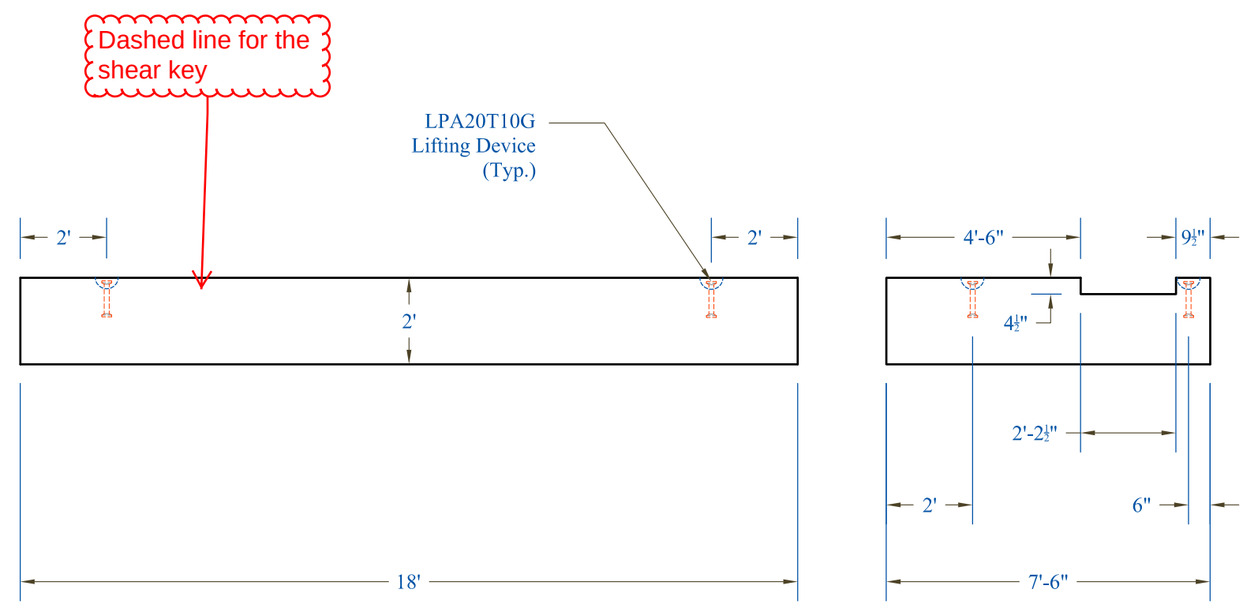

Vermont Agency of Transportation

RECEIVED

Abutment_WingWall_RetainingWall Submittal 1 120814_Resubmit 12.22.14.pdf

CK'D BY CLB OK'D BY DRP

December 9, 2014

RESUBMIT NO Approved AsNoted

BY C. CARLSON DATE 12/22/14

PRECAST CONCRETE ABUTMENT SHOP DRAWINGS (SDI JOB #15163)

SUPERVISOR: M. WHEELER
DETAILER: I. ADAMS
CHECKER: E. Barendse
ENGINEER:

PROJECT NAME: Stowe BRF 0235 (II)
PROJECT #: 0235 (II)
LOCATION: Stowe, VT

INSTALLER:
CCS Construction
138 Munson Ave
Morrisville, VT 05661
PH: 802-888-7701

FABRICATOR:
193 INDUSTRIAL AVE.
WILLISTON, VT 05495
Ph: (802) 658-0201

SD Ireland Precast Division

12/03/14 | Retaining Wall Details | 7 of 11

Tension Duct Bearing Plate

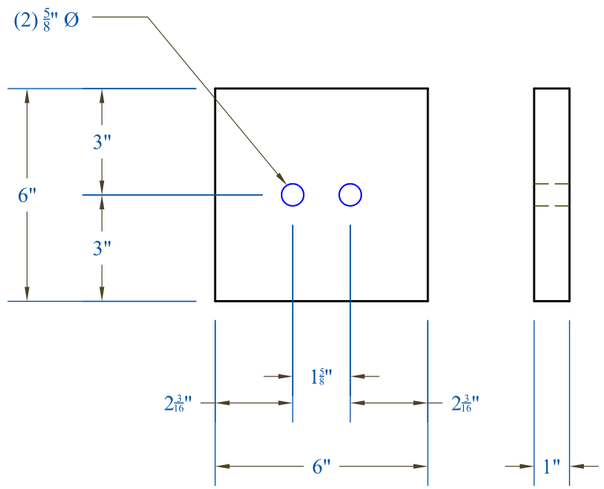

Reinforcement Detail at Tensioning Blockouts

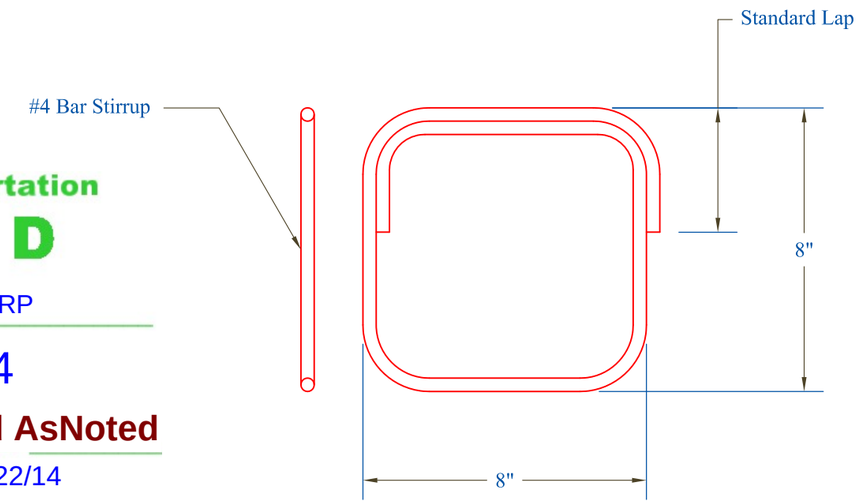

Vermont Agency of Transportation
RECEIVED
Abutment_WingWall_RetainingWall Submittal 1 120814_Resubmit 12.22.14.pdf

CK'D BY CLB OK'D BY DRP

December 9, 2014

RESUBMIT NO Approved AsNoted

BY C. CARLSON DATE 12/22/14

0.5" Barrel Chuck

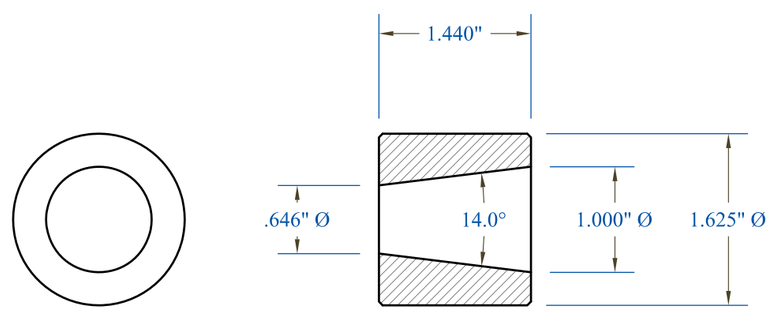

Anchor assembly shall be galvanized

0.5" 2-Part Wedge

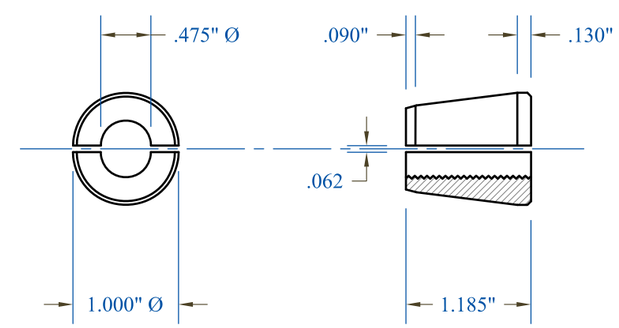

CONTRACTORS VTSPE:	PRECAST CONCRETE ABUTMENT SHOP DRAWINGS (SDI JOB #15163)	INSTALLER: CCS Construction 138 Munson Ave Morrisville, VT 05661 PH: 802-888-7701	FABRICATOR: 193 INDUSTRIAL AVE. WILLISTON, VT 05495 Ph: (802) 658-0201 SD Ireland Precast Division
	SUPERVISOR: M. WHEELER DETAILER: I. ADAMS CHECKER: E. Barendse ENGINEER:	PROJECT NAME: Stowe BRF 0235 (II) PROJECT #: 0235 (II) LOCATION: Stowe, VT	12/03/14 — Post Tensioning — 8 of 11

Tensioning Blockout Plan

-Anchor assembly shall be galvanized
-Grout blockout after post-tensioning

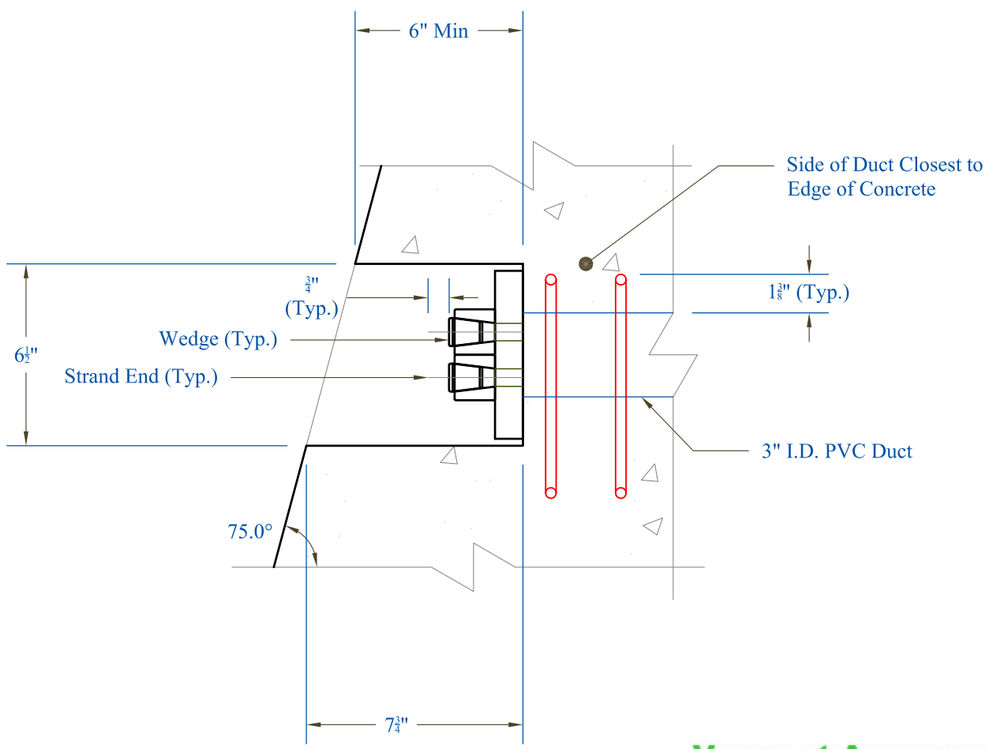

Tensioning Blockout Section

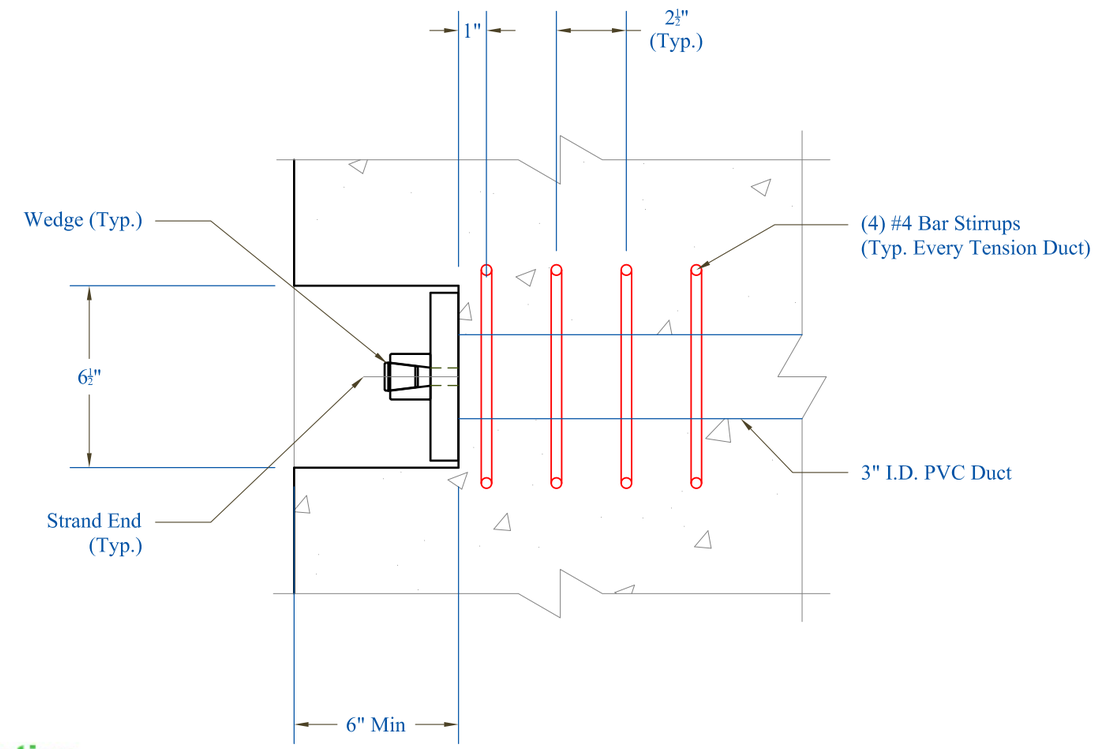

Vermont Agency of Transportation
RECEIVED
Abutment_WingWall_RetainingWall Submittal 1 120814_Resubmit 12.22.14.pdf

CK'D BY CLB OK'D BY DRP

December 9, 2014

RESUBMIT NO Approved AsNoted

BY C. CARLSON DATE 12/22/14

CONTRACTORS VTSPE:	PRECAST CONCRETE ABUTMENT SHOP DRAWINGS (SDI JOB #15163)	INSTALLER: CCS Construction 138 Munson Ave Morrisville, VT 05661 PH: 802-888-7701	FABRICATOR: 193 INDUSTRIAL AVE. WILLISTON, VT 05495 Ph: (802) 658-0201 SD Ireland Precast Division
	SUPERVISOR: M. WHEELER DETAILER: I. ADAMS CHECKER: E. Barendse ENGINEER:	PROJECT NAME: Stowe BRF 0235 (II) PROJECT #: 0235 (II) LOCATION: Stowe, VT	12/03/14 Post Tensioning 9 of 11

Vermont Agency of Transportation

RECEIVED

Abutment_WingWall_RetainingWall Submittal 1 120814_Resubmit 12.22.14.pdf

CK'D BY CLB OK'D BY DRP

December 9, 2014

RESUBMIT YES --------

BY C. CARLSON DATE 12/22/14

End Bar Detail: Abutment 1

it appears that the #4 bursting bars can be slightly adjusted or tilted so that the #7 can pass through the middle of them.

Rebar ID should reference and match what the dimension rebar plans have labeled for them.

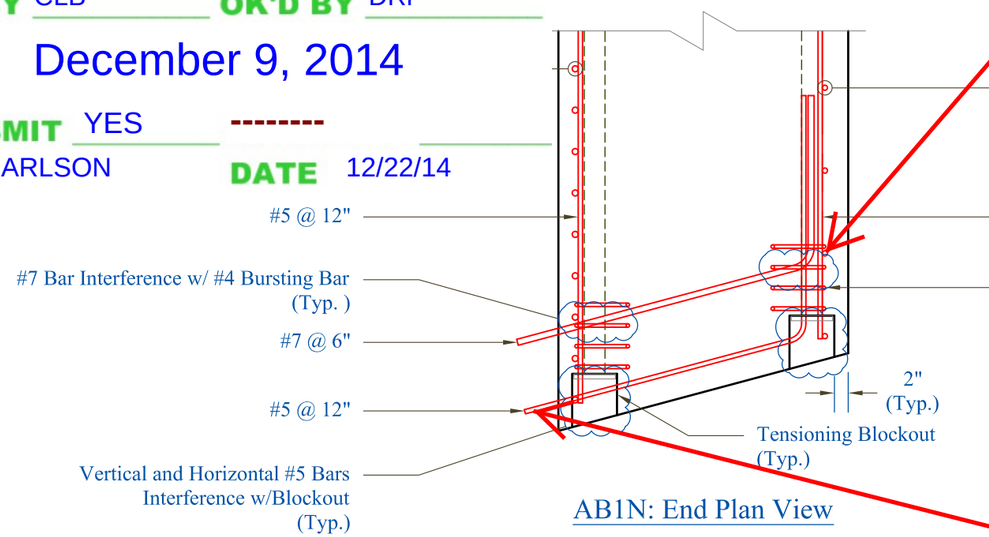

AB1N: End Plan View

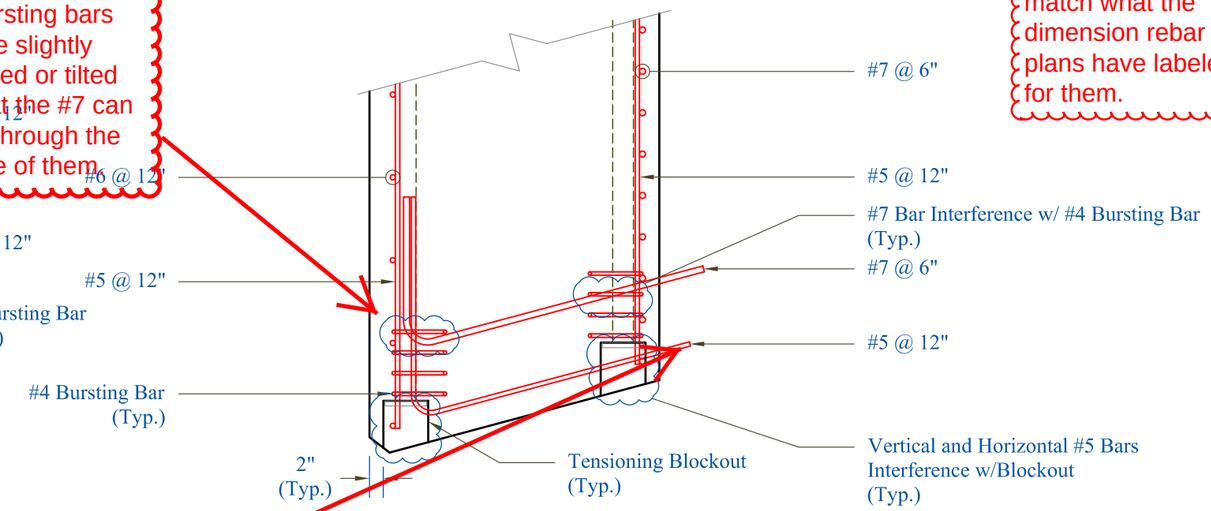

AB1S: End Plan View

projection distance? typical sheet 11

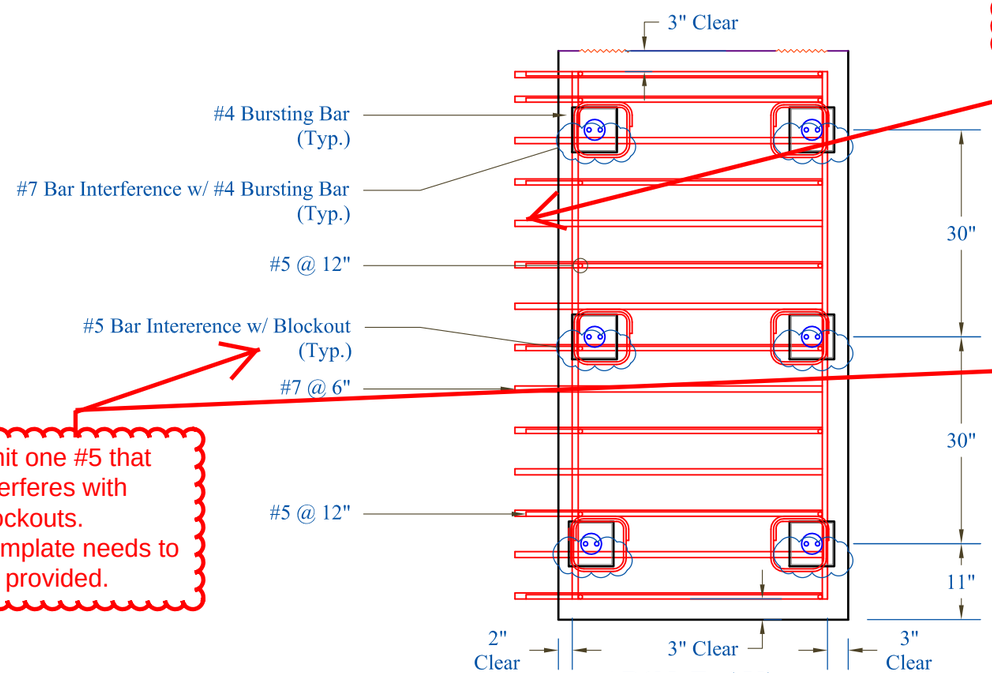

AB1N: End View

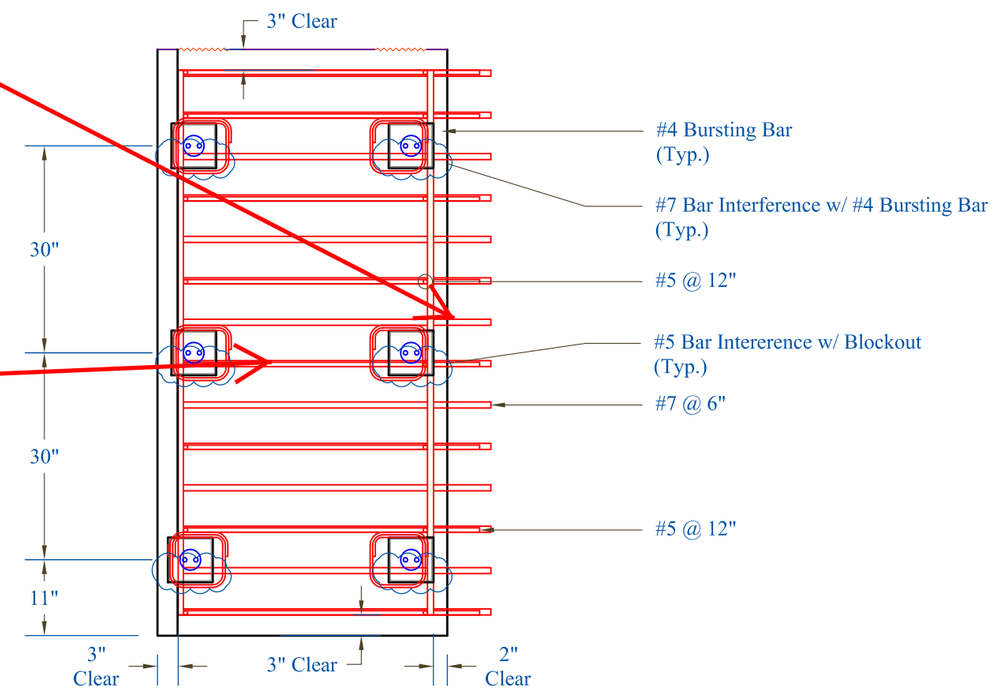

AB1S: End View

omit one #5 that interferes with blockouts. Template needs to be provided.

CONTRACTORS VTSPE:	PRECAST CONCRETE ABUTMENT SHOP DRAWINGS (SDI JOB #15163)	INSTALLER: CCS Construction 138 Munson Ave Morrisville, VT 05661 PH: 802-888-7701	FABRICATOR: 193 INDUSTRIAL AVE. WILLISTON, VT 05495 Ph: (802) 658-0201 SD Ireland Precast Division
	SUPERVISOR: M. WHEELER DETAILER: I. ADAMS CHECKER: E. Barendse ENGINEER:	PROJECT NAME: Stowe BRF 0235 (II) PROJECT #: 0235 (II) LOCATION: Stowe, VT	12/03/14 End Bar Detail Abmt.1 10 of 11

Vermont Agency of Transportation

RECEIVED

Abutment_WingWall_RetainingWall Submittal 1 120814_Resubmit 12.22.14.pdf

CK'D BY CLB OK'D BY DRP

December 9, 2014

RESUBMIT YES --------

BY C. CARLSON DATE 12/22/14

End Bar Detail: Abutment 2

Rebar ID should reference and match what the dimension rebar plans have labeled for them.

it appears that the #4 bursting bars can be slightly adjusted or tilted so that the #7 can pass through the middle of them.

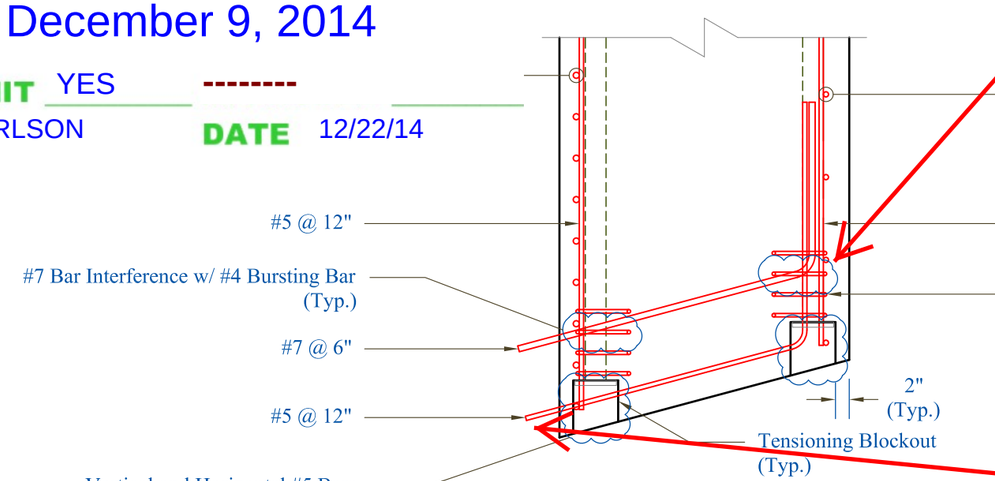

AB2S: End Plan View

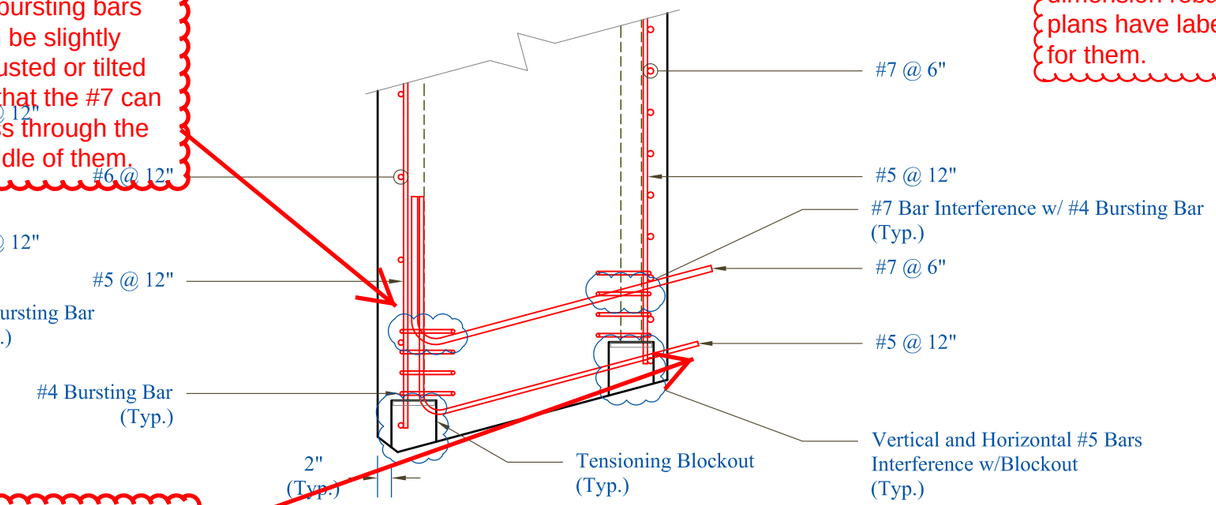

AB2N: End Plan View

projection distance?

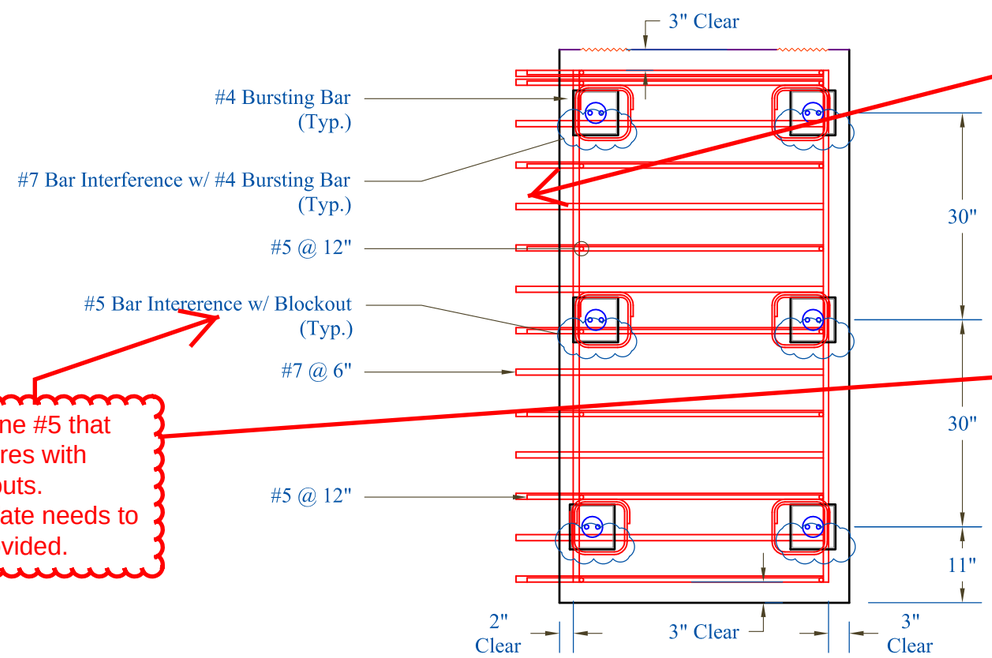

AB2S: End View

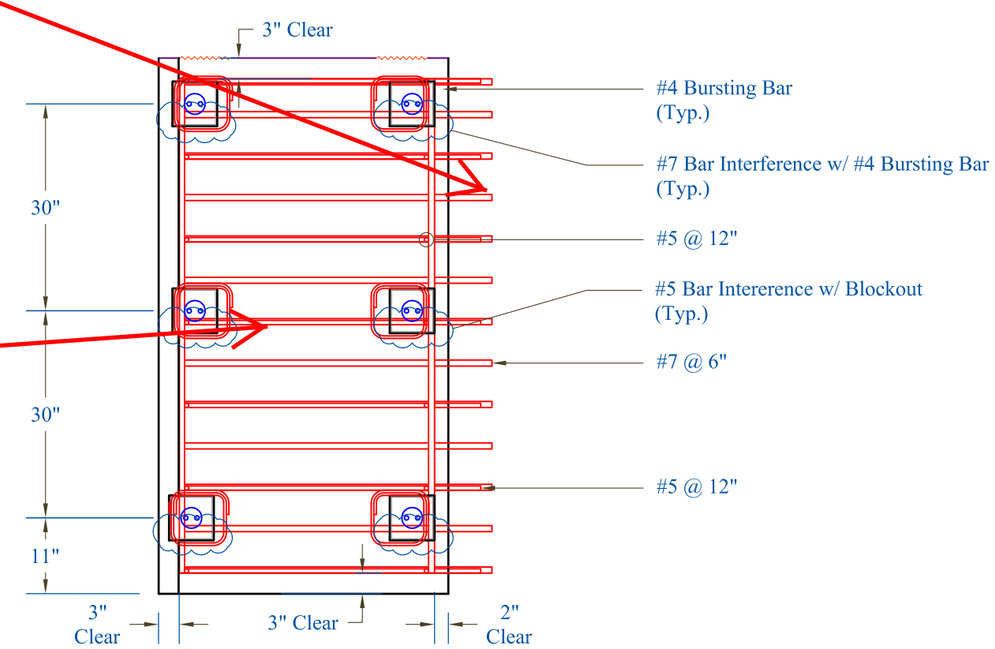

AB2N: End View

omit one #5 that interferes with blockouts. Template needs to be provided.

CONTRACTORS VTSPE:	PRECAST CONCRETE ABUTMENT SHOP DRAWINGS (SDI JOB #15163)	INSTALLER: CCS Construction 138 Munson Ave Morrisville, VT 05661 PH: 802-888-7701	FABRICATOR: 193 INDUSTRIAL AVE. WILLISTON, VT 05495 Ph: (802) 658-0201 SD Ireland Precast Division
	SUPERVISOR: M. WHEELER DETAILER: I. ADAMS CHECKER: E. Barendse ENGINEER:	PROJECT NAME: Stowe BRF 0235 (II) PROJECT #: 0235 (II) LOCATION: Stowe, VT	12/03/14 — End Bar Detail Abmt.2 — 11 of 11

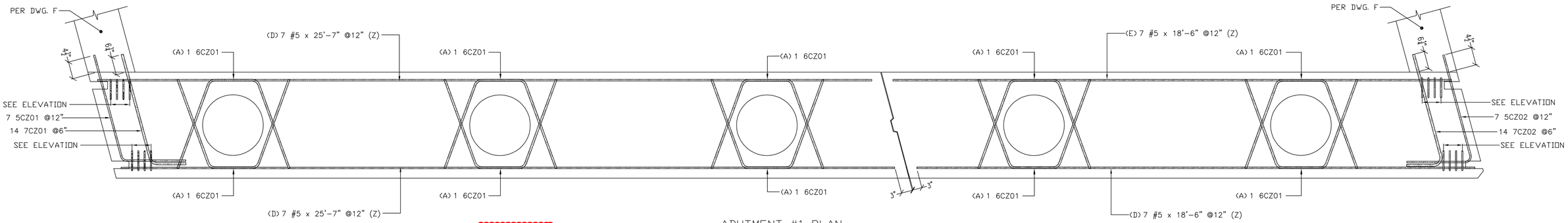

ABUTMENT #1 PLAN
VERTICALS NOT SHOW FOR CLARITY

this bars need to be spaced to avoid girders.

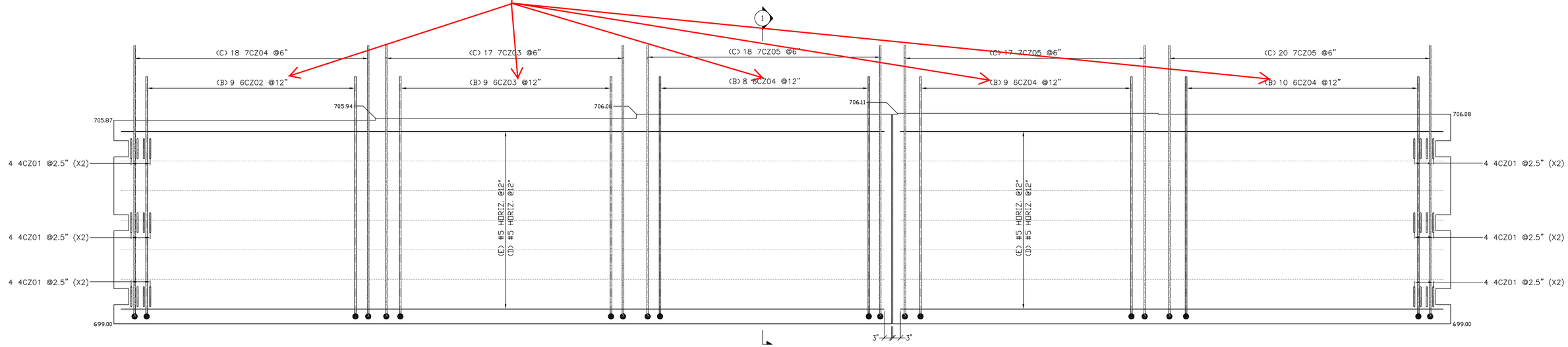

ABUTMENT #1 ELEVATION
PILES, PILE CAVITIES AND POST TENSIONING
DUCKS NOT SHOWN FOR CLARITY

FOR APPROVAL

ALL DUAL COATED REINF. DENOTED (Z)

ELEVATIONS & DIMENSIONS SHOWN ON THIS DWG. ARE FOR REINF. DETAILING PURPOSES ONLY AND ARE NOT INTENDED FOR CONSTRUCTION.

REINF. BARS ASTM A615 GRADE 60 DUAL COATED

VERIFICATION OF UNCLEAR INFORMATION MAY BE REQUESTED ON THIS DRAWING. SHOULD VERIFICATION BE LEFT UN-ADDRESSED IT WILL REMAIN AS SHOWN AND ASSUME TO BE CORRECT.

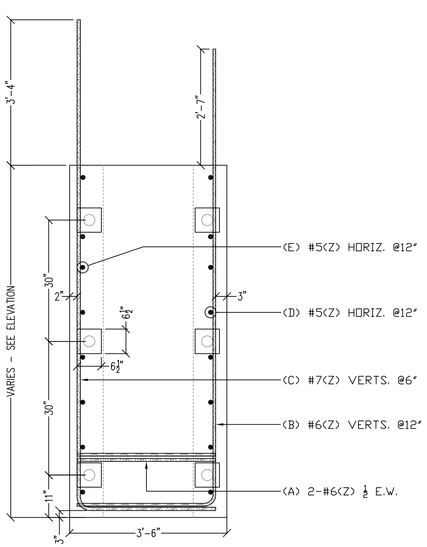

SECT. 1
REF. 40 OF 64

BAR LIST

Release Number: 003

Bar Mark	Qty	Size	Total Length	Type	'A'	'B'	'C'	'D'	'E'	'F'	'G'	'H'	'J'	'K'	'O'	'R'
	14	#5	25'-7"			25'-7"										
	14	#5	18'-6"			18'-6"										
4CZ01	48	#4	4'-8"	L9	0'-4 ½"	0'-8"	0'-8"	0'-8"	0'-8"	0'-8"	0'-4 ½"					
5CZ01	7	#5	5'-8 ¾"	3		3'-7 ½"	2'-1 ¼"					2'-0 ¼"		0'-6 ½"	4'-2"	
5CZ02	7	#5	5'-9 ¼"	21			3'-7 ½"	2'-1 ¾"				2'-1 ¼"		0'-6"		
6CZ01	10	#6	7'-9 ½"	3			3'-1 ¼"	1'-7"	3'-1 ¼"			2'-11"		1'-0 ¾"	3'-9 ¾"	
6CZ02	9	#6	12'-3"	17		3'-1"	9'-2"									
6CZ03	9	#6	12'-4"	17		3'-1"	9'-3"									
6CZ04	27	#6	12'-6"	17		3'-1"	9'-5"									
7CZ01	14	#7	4'-11 ¼"	3		3'-9 ¼"	1'-2"					1'-1 ½"		0'-3		
7CZ02	14	#7	4'-11 ¾"	21			3'-9"	1'-2 ¾"				1'-2 ½"		0'-2		
7CZ03	17	#7	13'-1"	17		3'-1"	10'-0"									
7CZ04	18	#7	12'-11"	17		3'-1"	9'-10"									
7CZ05	55	#7	13'-3"	17		3'-1"	10'-2"									

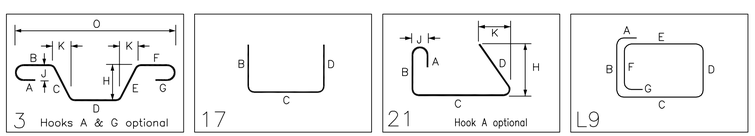

Vermont Agency of Transportation
RECEIVED
Abutment_WingWall_RetainingWall Submittal 1 120814_Resubmit 12.22.14.pdf

CK'D BY CLB OK'D BY DRP

December 9, 2014

RESUBMIT YES --------

BY C. CARLSON DATE 12/22/14

	DATE	REV.#	SENT FOR
6			
5			
4			
3			
2	12-05-14		REVISE/SDI COM/FOR APPROVAL
1	12-03-14		FOR APPROVAL

DIMENSION
DIMENSION FABRICATORS INC.
2000 7TH STREET
SOUTH, N.Y. 12302
PH: (518) 374-1936
FAX (518) 374-4830
www.dimensionfabricators.com

STRUCTURE	VTAOT STOWE BRF 0235(11)
LOCATION	WILLINSTON, VT
ARCHITECT	
ENGINEER	
CUSTOMER	SD IRELAND CONCRETE CONST. CORP.
DRAWN BY ED	DATE 12/3/14
DFI #	9117
DRAWING COVERS	ABUTMENT #1 DUAL COATED REINFORCING
DRAWING #	C

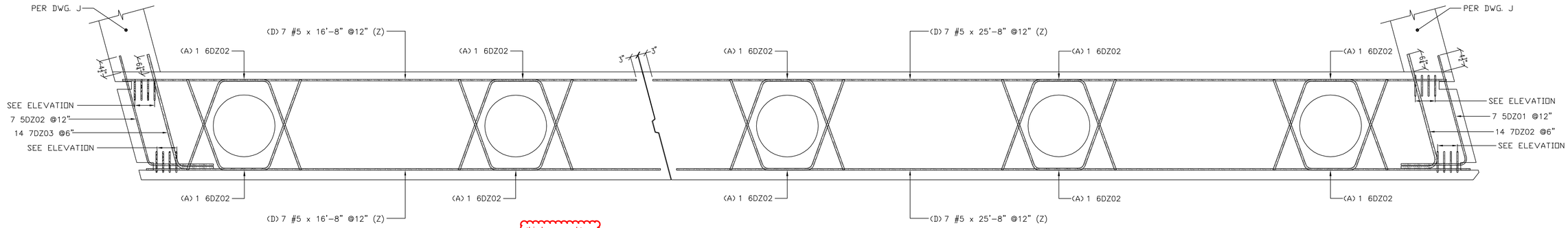

ABUTMENT #2 PLAN
VERTICALS NOT SHOW FOR CLARITY

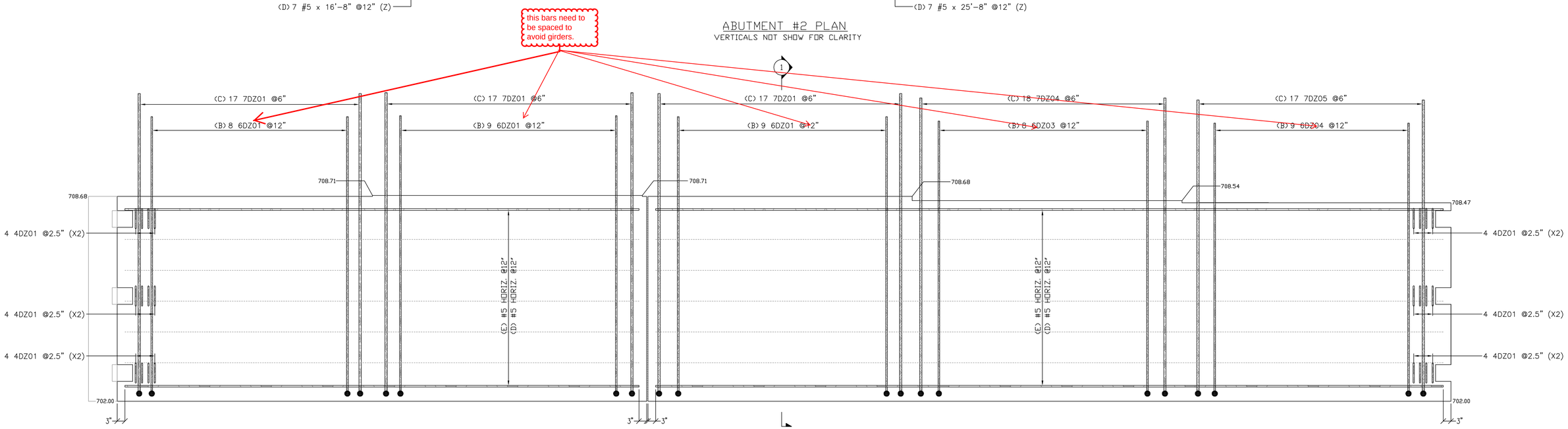

ABUTMENT #2 ELEVATION
PILES, PILE CAVITIES AND POST TENSIONING
DUCKS NOT SHOWN FOR CLARITY

FOR APPROVAL

ALL DUAL COATED REINF. DENOTED (Z)

ELEVATIONS & DIMENSIONS SHOWN ON THIS DWG. ARE FOR REINF. DETAILING PURPOSES ONLY AND ARE NOT INTENDED FOR CONSTRUCTION.

REINF. BARS ASTM A615 GRADE 60 DUAL COATED

VERIFICATION OF UNCLEAR INFORMATION MAY BE REQUESTED ON THIS DRAWING. SHOULD VERIFICATION BE LEFT UN-ADDRESSED IT WILL REMAIN AS SHOWN AND ASSUME TO BE CORRECT.

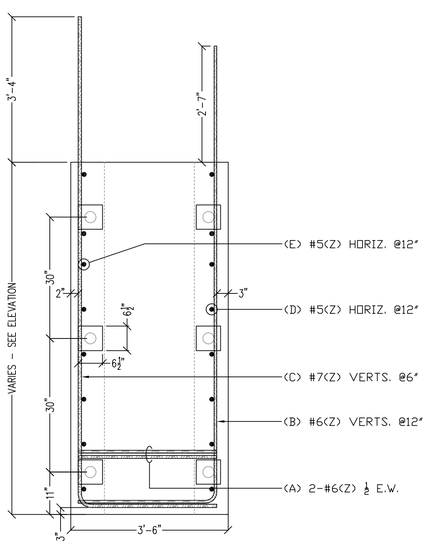

SECT. 1
REF. 40 OF 64

Release Number: 004

BAR LIST

Bar Mark	Qty	Size	Total Length	Type	'A'	'B'	'C'	'D'	'E'	'F'	'G'	'H'	'J'	'K'	'O'	'R'
	14	#5	16'-8"			16'-8"										
	14	#5	25'-8"			25'-8"										
4DZ01	48	#4	4'-8"	L9	0'-4 ½"	0'-8"	0'-8"	0'-8"	0'-8"	0'-8"	0'-4 ½"					
5DZ01	7	#5	5'-9 ¼"	21			3'-7 ½"	2'-1 ¾"				2'-1 ¼"		0'-6"		
5DZ02	7	#5	5'-8 ¾"	3		3'-7 ½"	2'-1 ¼"					2'-0 ¼"		0'-6 ½"	4'-2"	
6DZ01	26	#6	12'-1"	17		3'-1"	9'-0"									
6DZ02	10	#6	7'-9 ½"	3			3'-1 ¼"	1'-7"	3'-1 ¼"			2'-11"		1'-0 ¾"	3'-9 ¾"	
6DZ03	8	#6	11'-11"	17		3'-1"	8'-10"									
6DZ04	9	#6	11'-10"	17		3'-1"	8'-9"									
7DZ01	51	#7	12'-10"	17		3'-1"	9'-9"									
7DZ02	14	#7	4'-11 ¾"	21			3'-9"	1'-2 ¾"				1'-2 ½"		0'		
7DZ03	14	#7	4'-11 ¼"	3		3'-9 ¼"	1'-2"					1'-1 ½"		0		
7DZ04	18	#7	12'-8"	17		3'-1"	9'-7"									
7DZ05	17	#7	12'-7"	17		3'-1"	9'-6"									

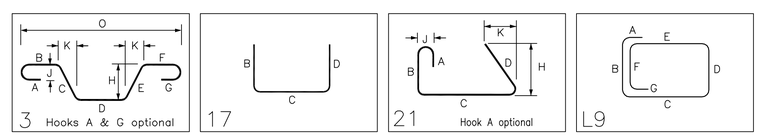

Vermont Agency of Transportation
RECEIVED
Abutment_WingWall_RetainingWall Submittal 1 120814_Resubmit 12.22.14.pdf

CK'D BY CLB OK'D BY DRP

December 9, 2014

RESUBMIT YES --------

BY C. CARLSON DATE 12/22/14

6			
5			
4			
3			
2			
1	12-04-14		FOR APPROVAL
	DATE	REV.#	SENT FOR

DIMENSION
DIMENSION FABRICATORS INC.
2000 7TH STREET SCOTIA, N.Y. 12302
PH: (518) 374-1936
FAX (518) 374-4830
www.dimensionfabricators.com

STRUCTURE: VTAOT STOWE BRF 0235(11)
LOCATION:
ARCHITECT:
ENGINEER:
CUSTOMER: SD IRELAND CONCRETE CONST. CORP.
DRAWN BY: ED
DATE: 12/4/14
DFI #: 9117
DRAWING COVERS: ABUTMENT #2 DUAL COATED REINFORCING
DRAWING #: D

Release Number: BAR LIST

Bar Mark	Qty	Size	Total Length	Type	'A'	'B'	'C'	'D'	'E'	'F'	'G'	'H'	'J'	'K'	'O'	'R'
	7	#5	5'-5"			5'-5"										
	14	#7	5'-0"			5'-0"										
	2	#7	8'-8"			8'-8"										
	1	#5	8'-7"			8'-7"										
5FZ01	12	#5	2'-0"	T11	0'-5 ½"	1'-1"					0'-5 ½"					
5FZ01	19	#5	2'-0"	T11	0'-5 ½"	1'-1"					0'-5 ½"					
5FZ02	12	#5	9'-5 ½"	21			9'-0"	0'-5 ½"				0'-4"		0'-3 ¾"		
5FZ03a	1	#5	2'-8"			2'-8"										
5FZ03b	1	#5	3'-11"			3'-11"										
5FZ03c	1	#5	5'-3"			5'-3"										
5FZ03d	1	#5	6'-6"			6'-6"										
5FZ03e	1	#5	7'-10"			7'-10"										
5FZ04a	1	#5	3'-6 ½"	21			3'-1"	0'-5 ½"				0'-4"		0'-3 ¾"		
5FZ04b	1	#5	4'-3 ¾"	21			3'-10 ¼"	0'-5 ½"				0'-4"		0'-3 ¾"		
5FZ04c	1	#5	5'-1 ¼"	21			4'-7 ¾"	0'-5 ½"				0'-4"		0'-3 ¾"		
5FZ04d	1	#5	5'-10 ¾"	21			5'-5 ¼"	0'-5 ½"				0'-4"		0'-3 ¾"		
5FZ04e	1	#5	6'-8"	21			6'-2 ½"	0'-5 ½"				0'-4"		0'-3 ¾"		
5FZ04f	1	#5	7'-5 ½"	21			7'-0"	0'-5 ½"				0'-4"		0'-3 ¾"		
5FZ04g	1	#5	8'-3"	21			7'-9 ½"	0'-5 ½"				0'-4"		0'-3 ¾"		
5FZ04h	1	#5	9'-0 ½"	21			8'-7"	0'-5 ½"				0'-4"		0'-3 ¾"		
5FZ05	4	#5	9'-3 ½"	21			8'-10"	0'-5 ½"				0'-4"		0'-3 ¾"		
5FZ06	1	#5	10'-7"	3		9'-2"	1'-5"					0'-10 ½"		1'-1 ¼"	10'-3 ¼"	
5FZ07a	1	#5	3'-9 ½"	21			3'-4"	0'-5 ½"				0'-4"		0'-3 ¾"		
5FZ07b	1	#5	4'-6 ¾"	21			4'-1 ¼"	0'-5 ½"				0'-4"		0'-3 ¾"		
5FZ07c	1	#5	5'-4"	21			4'-10 ½"	0'-5 ½"				0'-4"		0'-3 ¾"		
5FZ07d	1	#5	6'-1 ½"	21			5'-8"	0'-5 ½"				0'-4"		0'-3 ¾"		
5FZ07e	1	#5	6'-10 ¾"	21			6'-5 ¼"	0'-5 ½"				0'-4"		0'-3 ¾"		
5FZ07f	1	#5	7'-8"	21			7'-2 ½"	0'-5 ½"				0'-4"		0'-3 ¾"		
5FZ07g	1	#5	8'-5 ½"	21			8'-0"	0'-5 ½"				0'-4"		0'-3 ¾"		
7FZ01a	1	#7	2'-0"			2'-0"										
7FZ01b	1	#7	2'-7"			2'-7"										
7FZ01c	1	#7	3'-3"			3'-3"										
7FZ01d	1	#7	3'-10"			3'-10"										
7FZ01e	1	#7	4'-6"			4'-6"										
7FZ01f	1	#7	5'-2"			5'-2"										
7FZ01g	1	#7	5'-9"			5'-9"										

Release Number: BAR LIST

Bar Mark	Qty	Size	Total Length	Type	'A'	'B'	'C'	'D'	'E'	'F'	'G'	'H'	'J'	'K'	'O'	'R'
7FZ01h	1	#7	6'-5"			6'-5"										
7FZ01i	1	#7	7'-0"			7'-0"										
7FZ01j	1	#7	7'-8"			7'-8"										
7FZ01k	1	#7	8'-4"			8'-4"										
7FZ02	1	#7	10'-8"	3		9'-5"	1'-3"					0'-9 ¼"		0'-11 ¾"	10'-4 ¾"	

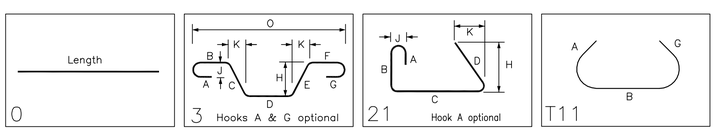

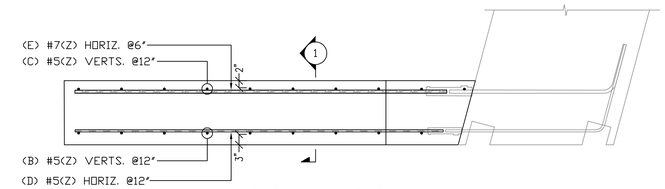

WINGWALL #2 PLAN

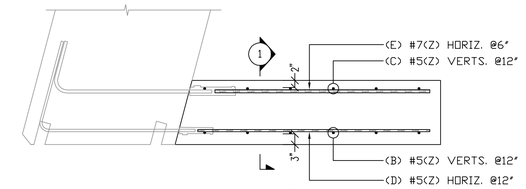

WINGWALL #1 PLAN

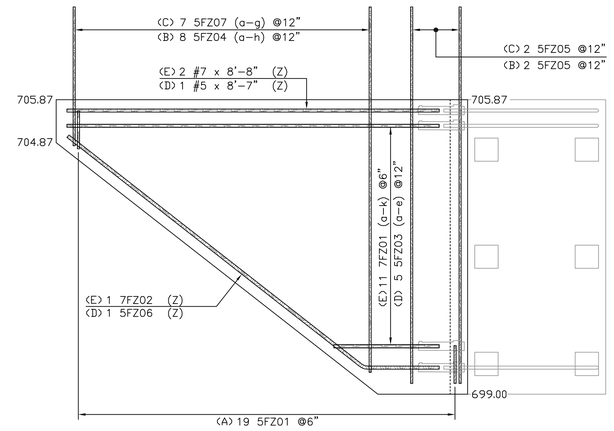

WINGWALL #2 ELEVATION

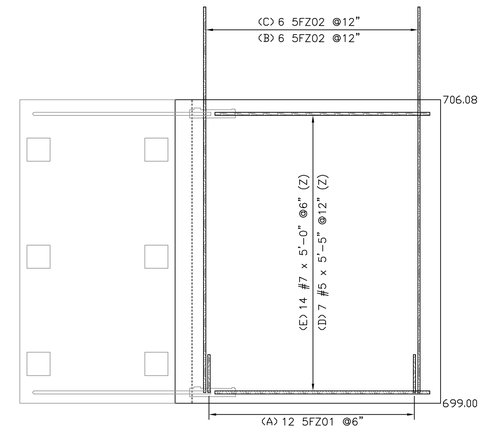

WINGWALL #1 ELEVATION

ALL DUAL COATED REINF. DENOTED (Z)

ELEVATIONS & DIMENSIONS SHOWN ON THIS DWG. ARE FOR REINF. DETAILING PURPOSES ONLY AND ARE NOT INTENDED FOR CONSTRUCTION.

REINF. BARS ASTM A615 GRADE 60 DUAL COATED

VERIFICATION OF UNCLEAR INFORMATION MAY BE REQUESTED ON THIS DRAWING. SHOULD VERIFICATION BE LEFT UN-ADDRESSED IT WILL REMAIN AS SHOWN AND ASSUME TO BE CORRECT.

Please verify and resubmit the reinforcing steel schedule for all the Wingwalls.
-There are a lot of differences in the schedule and labeling on sheet J for Wingwalls #3 and #4 and a lot of errors, so please also verify Wingwalls #1 and #2
-Besides the labels, Wingwall #2 and Wingwall #3 should be approximately the same.

Vermont Agency of Transportation
RECEIVED
Abutment_WingWall_RetainingWall Submittal 1 120814_Resubmit 12.22.14.pdf

CK'D BY CLB OK'D BY DRP

December 9, 2014

RESUBMIT YES --------

BY C. CARLSON DATE 12/22/14

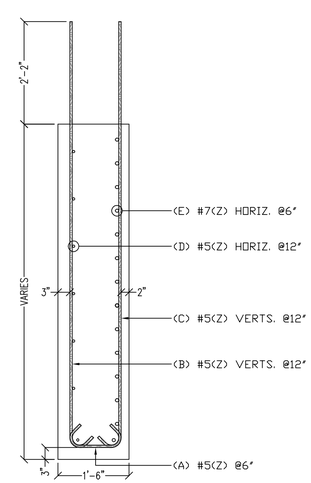

SECT. 1
REF. 42 OF 64

FOR APPROVAL

LEGEND:
CONT.-CONTINUOUS
TRANS.-TRANSVERSE
DWLS.-DOWELS
VERTS.-VERTICAL
HORIZ.-HORIZONTAL
T&B -TOP & BOTTOM
I.F.-INNER FACE
O.F.-OUTER FACE
E.E.-EACH END
E.F.-EACH FACE
F.F.-FRONT FACE
R.F.-REAR FACE
E.W.-EACH WAY
O.C.-ON CENTER
L.W.-LONG WAY
S.W.-SHORT WAY

	DATE	REV.#	SENT FOR
6			
5			
4			
3			
2			
1	12-05-14		FOR APPROVAL

DIMENSION
DIMENSION FABRICATORS INC.
2000 7TH STREET
SCOTIA, N.Y. 12302
PH: (518) 374-1936
FAX (518) 374-4630
www.dimensionfabricators.com

STRUCTURE: VTAOT STOWE BRF 0235(11)
LOCATION:
ARCHITECT:
ENGINEER:
CUSTOMER: SD IRELAND CONCRETE CONST. CORP.
DRAWN BY: ED
DATE: 12/5/14
DFI #: 9117
DRAWING COVERS: WINGWALLS 1 & 2 DUAL COATED REINFORCING
DRAWING #: F

Drawing Sheet : J — BAR LIST

Bar Mark	Qty	Size	Total Length	Type	'A'	'B'	'C'	'D'	'E'	'F'	'G'	'H'	'J'	'K'	'O'	'R'
	2	#7	8'-8"			8'-8"										
	2	#7	8'-8"			8'-8"										
	1	#5	8'-7"			8'-7"										
	1	#5	8'-7"			8'-7"										
5JZ01	19	#5	2'-0"	T11	0'-5 ½"	1'-1"					0'-5 ½"					
5JZ01	19	#5	2'-0"	T11	0'-5 ½"	1'-1"					0'-5 ½"					
5JZ02	1	#5	10'-5"	3		9'-1"	1'-4"					0'-9 ¾"		1'-0 ½"	10'-1 ½"	
5JZ03	2	#5	9'-0 ½"	21			8'-7"	0'-5 ½"				0'-4"		0'-3 ¾"		
5JZ04	2	#5	9'-0 ½"	21			8'-7"	0'-5 ½"				0'-4"		0'-3 ¾"		
5JZ05a	1	#5	3'-11 ½"	21			3'-6"	0'-5 ½"				0'-4"		0'-3 ¾"		
5JZ05b	1	#5	4'-8 ½"	21			4'-3"	0'-5 ½"				0'-4"		0'-3 ¾"		
5JZ05c	1	#5	5'-5 ½"	21			5'-0"	0'-5 ½"				0'-4"		0'-3 ¾"		
5JZ05d	1	#5	6'-2 ½"	21			5'-9"	0'-5 ½"				0'-4"		0'-3 ¾"		
5JZ05e	1	#5	6'-11 ½"	21			6'-6"	0'-5 ½"				0'-4"		0'-3 ¾"		
5JZ05f	1	#5	7'-8 ½"	21			7'-3"	0'-5 ½"				0'-4"		0'-3 ¾"		
5JZ05g	1	#5	8'-5 ½"	21			8'-0"	0'-5 ½"				0'-4"		0'-3 ¾"		
5JZ06a	1	#5	2'-8"			2'-8"										
5JZ06b	1	#5	4'-0"			4'-0"										
5JZ06c	1	#5	5'-4"			5'-4"										
5JZ06d	1	#5	6'-8"			6'-8"										
5JZ06e	1	#5	8'-0"			8'-0"										
5JZ10a	1	#5	3'-6 ½"	21			3'-1"	0'-5 ½"				0'-4"		0'-3 ¾"		
5JZ10b	1	#5	4'-3 ½"	21			3'-10"	0'-5 ½"				0'-4"		0'-3 ¾"		
5JZ10c	1	#5	5'-0 ½"	21			4'-7"	0'-5 ½"				0'-4"		0'-3 ¾"		
5JZ10d	1	#5	5'-9 ½"	21			5'-4"	0'-5 ½"				0'-4"		0'-3 ¾"		
5JZ10e	1	#5	6'-6 ½"	21			6'-1"	0'-5 ½"				0'-4"		0'-3 ¾"		
5JZ10f	1	#5	7'-3 ½"	21			6'-10"	0'-5 ½"				0'-4"		0'-3 ¾"		
5JZ10g	1	#5	8'-0 ½"	21			7'-7"	0'-5 ½"				0'-4"		0'-3 ¾"		
5JZ10h	1	#5	8'-9 ½"	21			8'-4"	0'-5 ½"				0'-4"		0'-3 ¾"		
5JZ11a	1	#5	3'-2"			3'-2"										
5JZ11b	1	#5	4'-5"			4'-5"										
5JZ11c	1	#5	5'-8"			5'-8"										
5JZ11d	1	#5	6'-11"			6'-11"										
5JZ11e	1	#5	8'-2"			8'-2"										
5JZ12	1	#5	10'-6"	3		8'-7"	1'-11"					1'-2 ½"		1'-5 ¾"	10'-0 ¾"	
5JZ13	3	#5	8'-10 ½"	21			8'-5"	0'-5 ½"				0'-4"		0'-3 ¾"		

Drawing Sheet : J — BAR LIST

Bar Mark	Qty	Size	Total Length	Type	'A'	'B'	'C'	'D'	'E'	'F'	'G'	'H'	'J'	'K'	'O'	'R'
5JZ14	2	#5	8'-10 ½"	21			8'-5"	0'-5 ½"				0'-4"		0'-3 ¾"		
5JZ15a	1	#5	3'-6 ½"	21			3'-1"	0'-5 ½"				0'-4"		0'-3 ¾"		
5JZ15b	1	#5	4'-4"	21			3'-10 ½"	0'-5 ½"				0'-4"		0'-3 ¾"		
5JZ15c	1	#5	5'-1 ¾"	21			4'-8 ¼"	0'-5 ½"				0'-4"		0'-3 ¾"		
5JZ15d	1	#5	5'-11 ½"	21			5'-6"	0'-5 ½"				0'-4"		0'-3 ¾"		
5JZ15e	1	#5	6'-9"	21			6'-3 ½"	0'-5 ½"				0'-4"		0'-3 ¾"		
5JZ15f	1	#5	7'-6 ¾"	21			7'-1 ¼"	0'-5 ½"				0'-4"		0'-3 ¾"		
5JZ15g	1	#5	8'-4 ½"	21			7'-11"	0'-5 ½"				0'-4"		0'-3 ¾"		
5JZ16a	1	#5	3'-11 ½"	21			3'-6"	0'-5 ½"				0'-4"		0'-3 ¾"		
5JZ16b	1	#5	4'-9"	21			4'-3 ½"	0'-5 ½"				0'-4"		0'-3 ¾"		
5JZ16c	1	#5	5'-6 ¾"	21			5'-1 ¼"	0'-5 ½"				0'-4"		0'-3 ¾"		
5JZ16d	1	#5	6'-4 ½"	21			5'-11"	0'-5 ½"				0'-4"		0'-3 ¾"		
5JZ16e	1	#5	7'-2"	21			6'-8 ½"	0'-5 ½"				0'-4"		0'-3 ¾"		
5JZ16f	1	#5	7'-11 ¾"	21			7'-6 ¼"	0'-5 ½"				0'-4"		0'-3 ¾"		
5JZ16g	1	#5	8'-9 ½"	21			8'-4"	0'-5 ½"				0'-4"		0'-3 ¾"		
7JZ01	1	#7	10'-6"	3		9'-1"	1'-5"					0'-10 ½"		1'-1 ¼"	10'-2 ¼"	
7JZ02a	1	#7	2'-1"			2'-1"										
7JZ02b	1	#7	2'-9"			2'-9"										
7JZ02c	1	#7	3'-5"			3'-5"										
7JZ02d	1	#7	4'-1"			4'-1"										
7JZ02e	1	#7	4'-9"			4'-9"										
7JZ02f	1	#7	5'-5"			5'-5"										
7JZ02g	1	#7	6'-1"			6'-1"										
7JZ02h	1	#7	6'-9"			6'-9"										
7JZ02i	1	#7	7'-5"			7'-5"										
7JZ02j	1	#7	8'-1"			8'-1"										
7JZ03a	1	#7	2'-7"			2'-7"										
7JZ03b	1	#7	3'-2"			3'-2"										
7JZ03c	1	#7	3'-10"			3'-10"										
7JZ03d	1	#7	4'-5"			4'-5"										
7JZ03e	1	#7	5'-1"			5'-1"										
7JZ03f	1	#7	5'-8"			5'-8"										
7JZ03g	1	#7	6'-4"			6'-4"										
7JZ03h	1	#7	6'-11"			6'-11"										
7JZ03i	1	#7	7'-7"			7'-7"										
7JZ03j	1	#7	8'-3"			8'-3"										

Drawing Sheet : J — BAR LIST

Bar Mark	Qty	Size	Total Length	Type	'A'	'B'	'C'	'D'	'E'	'F'	'G'	'H'	'J'	'K'	'O'	'R'
7JZ04	1	#7	10'-7"	3		8'-7"	2'-0"					1'-3"		1'-6 ½"	10'-1 ½"	

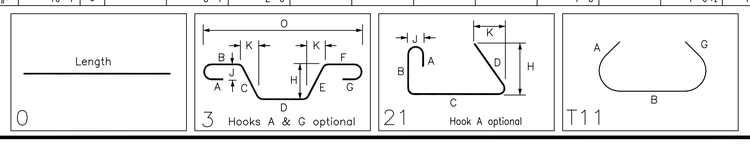

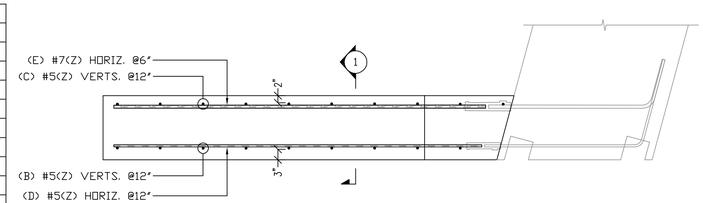

WINGWALL #3 PLAN

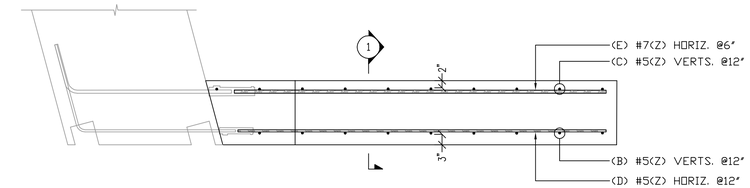

WINGWALL #4 PLAN

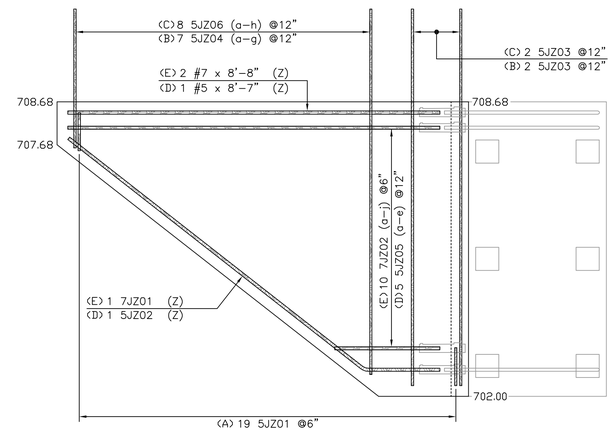

WINGWALL #3 ELEVATION

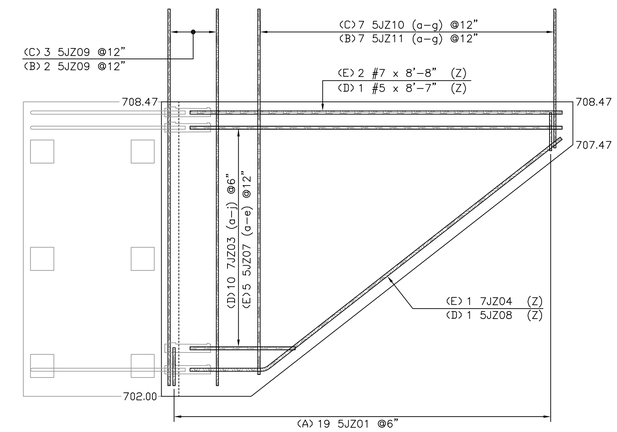

WINGWALL #4 ELEVATION

Please verify and resubmit the reinforcing steel schedule for all the wingwalls.
-5JZ03 should have quantity of 4
-5JZ04 should have a-g
-5JZ105 in schedule is (a-g) but labeled on drawing (a-e)
-5JZ06 should be #21
-5JZ06 in schedule is (a-e) but labeled on drawing (a-h)
-Missing 5JZ07 (a-e)
-Missing 5JZ08
-Missing 5JZ09
-5JZ10 in schedule is (a-h) but labeled on drawing (a-g)
-5JZ11 in schedule is (a-e) but labeled on drawing (a-g)
-5JZ10 and 5JZ11 should be the same bar type (#21)
-7JZ02 bars are straight but 5JZ05 are #21? The equivalent bars for wingwall #2 are straight
-What are bars 5JZ12, 5JZ13, 5JZ14, 5JZ15 (a-g), and 5JZ16 (a-e)
-Besides the labels, wingwall #2 and wingwall #3 should be approximately the same.

Vermont Agency of Transportation
RECEIVED
Abutment_WingWall_RetainingWall Submittal 1 120814_Resubmit 12.22.14.pdf

CK'D BY CLB OK'D BY DRP

December 9, 2014

RESUBMIT YES --------

BY C. CARLSON DATE 12/22/14

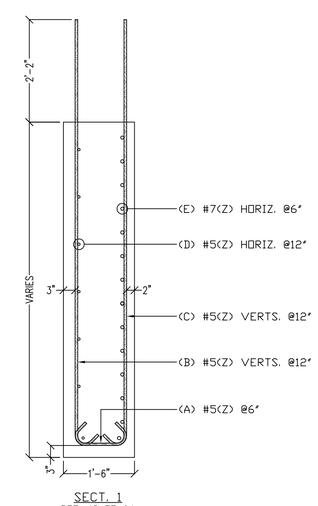

SECT. 1
REF. 42 OF 64

ALL DUAL COATED REINF. DENOTED (Z)

ELEVATIONS & DIMENSIONS SHOWN ON THIS DWG. ARE FOR REINF. DETAILING PURPOSES ONLY AND ARE NOT INTENDED FOR CONSTRUCTION.

REINF. BARS ASTM A615 GRADE 60 DUAL COATED

VERIFICATION OF UNCLEAR INFORMATION MAY BE REQUESTED ON THIS DRAWING. SHOULD VERIFICATION BE LEFT UN-ADDRESSED IT WILL REMAIN AS SHOWN AND ASSUME TO BE CORRECT.

FOR APPROVAL

LEGEND:
CONT.-CONTINUOUS
TRANS.-TRANSVERSE
DWLS.-DOWELS
VERTS.-VERTICAL
HORIZ.-HORIZONTAL
T&B -TOP & BOTTOM
I.F.-INNER FACE
O.F.-OUTER FACE
E.E.-EACH END
E.F.-EACH FACE
F.F.-FRONT FACE
R.F.-REAR FACE
E.W.-EACH WAY
O.C.-ON CENTER
L.W.-LONG WAY
S.W.-SHORT WAY

	DATE	REV.#	SENT FOR
6			
5			
4			
3			
2			
1	12-05-14		FOR APPROVAL

DIMENSION
DIMENSION FABRICATORS INC.
2000 7TH STREET
SCOTIA, N.Y. 12302
PH: (518) 374-1936
FAX (518) 374-4630
www.dimensionfabricators.com

STRUCTURE: VTAOT STOWE BRF 0235(11)
LOCATION:
ARCHITECT:
ENGINEER:
CUSTOMER: SD IRELAND CONCRETE CONST. CORP.
DRAWN BY: ED
DATE: 12/5/14
DFT #: 9117
DRAWING COVERS: WINGWALLS 3 & 4 DUAL COATED REINFORCING
DRAWING #: J

Drawing Sheet : K																	BAR LIST
Bar Mark	Qty	Size	Total Length	Type	'A'	'B'	'C'	'D'	'E'	'F'	'G'	'H'	'J'	'K'	'O'	'R'
	30	#5	17'-6"			17'-6"										
	38	#5	7'-0"			7'-0"										
	38	#5	6'-4"			6'-4"										
3KZ01	8	#3	6'-6 ½"	25		1'-6"	1'-0 ¼"	1'-6"	1'-0 ¼"	1'-6"		1'-0"		0'-6"		
5KZ01	38	#5	2'-10"	17		0'-10"	2'-0"									
5KZ02	19	#5	5'-4"	17		2'-2"	1'-0"	2'-2"								

need to include extra straight length of #3 for samples. we need straight section over 2.5' long.

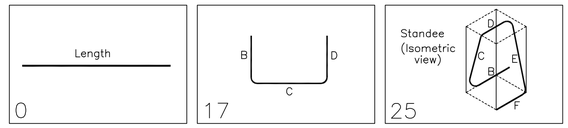

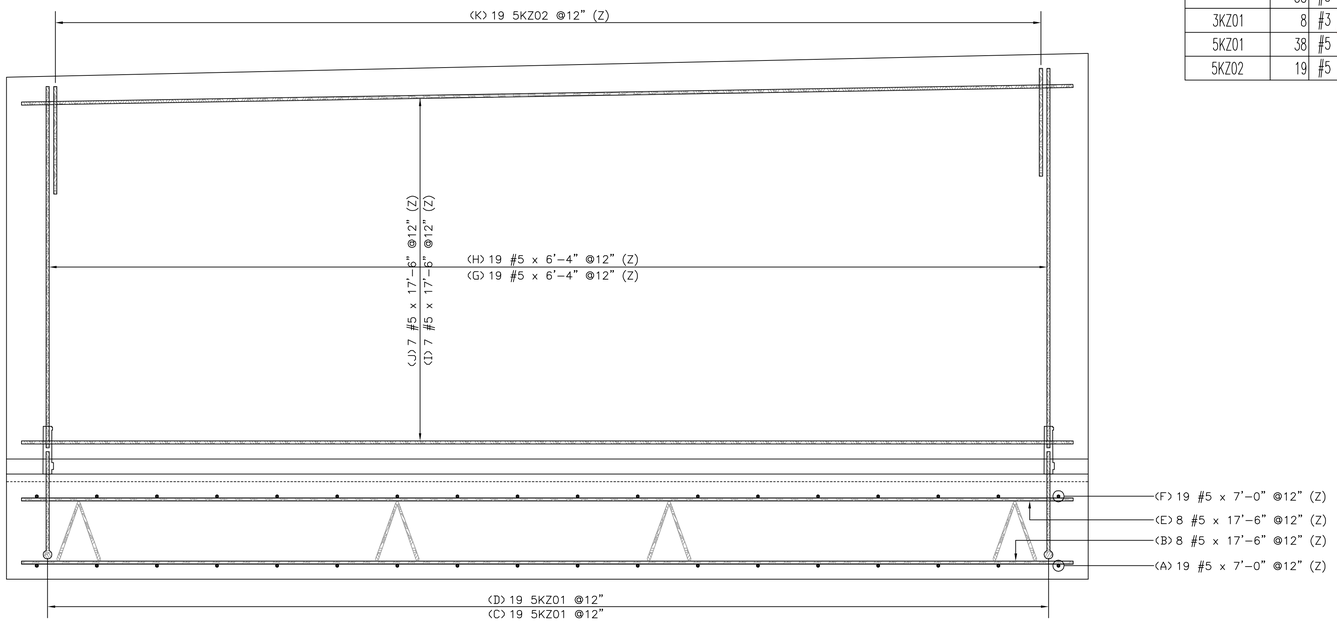

RETAINING WALL ELEVATION

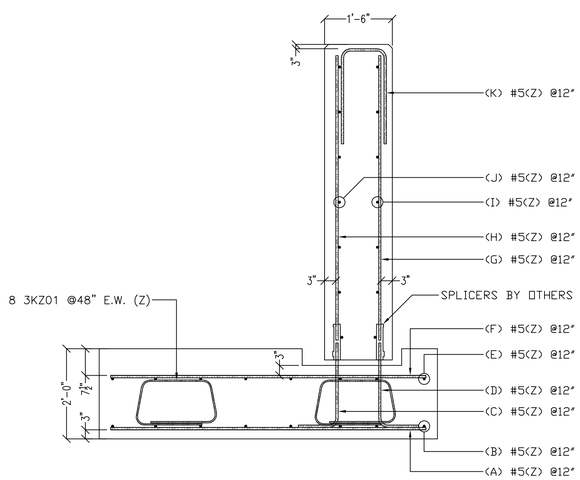

SECT. 1
REF. 0/S-0

Vermont Agency of Transportation
RECEIVED
Abutment_WingWall_RetainingWall Submittal 1 120814_Resubmit 12.22.14.pdf

CK'D BY CLB OK'D BY DRP

December 9, 2014

RESUBMIT NO Approved AsNoted

BY C. CARLSON DATE 12/22/14

ALL DUAL COATED REINF. DENOTED (Z)

ELEVATIONS & DIMENSIONS SHOWN ON THIS DWG. ARE FOR REINF. DETAILING PURPOSES ONLY AND ARE NOT INTENDED FOR CONSTRUCTION.

REINF. BARS ASTM A615 GRADE 60 DUAL COATED

VERIFICATION OF UNCLEAR INFORMATION MAY BE REQUESTED ON THIS DRAWING. SHOULD VERIFICATION BE LEFT UN-ADDRESSED IT WILL REMAIN AS SHOWN AND ASSUME TO BE CORRECT.

FOR APPROVAL

LEGEND:
CONT.-CONTINUOUS
TRANS.-TRANSVERSE
DWLS.-DOWELS
VERTS.-VERTICAL
HORIZ.-HORIZONTAL
T&B -TOP & BOTTOM
I.F.-INNER FACE
O.F.-OUTER FACE
E.E.-EACH END
E.F.-EACH FACE
F.F.-FRONT FACE
R.F.-REAR FACE
E.W.-EACH WAY
O.C.-ON CENTER
L.W.-LONG WAY
S.W.-SHORT WAY

6			
5			
4			
3			
2	12-8-14		REVISED/SDI COM/FOR APPROVAL
1	12-8-14		FOR APPROVAL
	DATE	REV.#	SENT FOR

DIMENSION
DIMENSION FABRICATORS INC.
2000 7TH STREET
SCOTIA, N.Y. 12302
PH: (518) 374-1936
FAX (518) 374-4830
www.dimensionfabricators.com

STRUCTURE	VTAOT STOWE BRF 0235(11)
LOCATION	WILLISTON, VT
ARCHITECT	
ENGINEER	
CUSTOMER	SD IRELAND CONCRETE CONST. CORP.
DRAWN BY ED	DATE 12/8/14 — DFI # 9117
DRAWING COVERS RETAINING WALL DUAL COATED REINFORCING	DRAWING # K

Vermont Agency of Transportation
RECEIVED
Abutment_WingWall_RetainingWall Submittal 1 120814_Resubmit 12.22.14.pdf

S.D. Ireland
Concrete Construction Corporation

CK'D BY CLB OK'D BY DRP
December 9, 2014
RESUBMIT NO Approved
BY C. CARLSON DATE 12/22/14

CONCRETE MIX

5000 psi

SCC

SDI MIX CODE: P50TER

DATE: May 22, 2014 **PLANT:** Burlington, VT

PROJECT: General DOT Precast - 2014

FINE AGGREGATE:
ASTM C 33

Source: Hinesburg Sand & Gravel
Specific Gravity: 2.67 (Abs.: 1.30%)
Fineness Modulus: 2.9

COARSE AGGREGATE:
ASTM C 33

Source: S.D. Ireland, Brownell Quarry
Specific Gravity: 2.80 (Abs.: 0.30%)
Description 3/4" 100% Crushed Stone (Size #67)

CEMENT:

Ternary Blend Cement; Lefarge North America Lakes and Seaway Re St. Constant, Quebec (22% Slag, 5% Silica Fume, 73% Type II Cement) (Sp.Gvty: 3.02)

ADMIXTURES:

Water Reducer (HRWR): Glenium 7500; BASF Admixtures
Air Entraining Agent: Darex II AEA; Grace Concrete Chemicals

CONSTITUENTS (LBS. /YD³)

		Abs.Vol.
Coarse Aggregate (SSD)	1675	9.59
Fine Aggregate (SSD)	1162	6.97
Cement	705	3.74
Water	300	4.81
Air Content (Entrained)	7.0%	1.89
Total	3842	27.00ft³

MIX PROPERTIES/ REQUIREMENTS

Water Cement Ratios: 0.426 (0.44)
Entrained Air Content: 5.0 % – 9.0%
Dry Unit Weight: 142.0 ± pcf
Spread: 21" to 27"
Concrete Temperatures: 50 – 85°F
VSI=/<1

***ADMIXTURE(S) DOSEAGE (OZ. /YD³)**

Glenium 7500 (HRWR)	46 - 53
Darex II AEA	2.3

Approved Janet Wild
VAOT Composite
Materials Engineer
5/23/14

TYPICAL STRENGTH GAIN

18-HOURS	1980 psi
3-DAYS	3760 psi
7-DAYS	4790 psi
28-DAYS	6020 psi

*Admixture dosage rates are subject to change.

P. O. Box 2286, South Burlington, VT 05407 • 193 Industrial Avenue, Williston, VT 05495

S.D. Ireland is an Equal Opportunity Employer

Vermont Agency of Transportation
RECEIVED
Abutment_WingWall_RetainingWall Submittal 1 120814_Resubmit 12.22.14.pdf
CK'D BY CLB OK'D BY DRP
December 9, 2014
RESUBMIT NO Approved
BY C. CARLSON DATE 12/22/14

24" corrugated steel pipe for the Pile Sleeves

SPECIFICATION FOR CORRUGATED STEEL PIPE – GALVANIZED STEEL:

SCOPE:
THIS SPECIFICATION COVERS THE MANUFACTURE AND INSTALLATION OF THE GALVANIZED CORRUGATED STEEL PIPE(CSP) DETAILED IN THE PROJECT PLANS.

MATERIALS:
THE GALVANIZED STEEL COILS SHALL CONFORM TO THE APPLICABLE REQUIREMENTS OF AASHTO M 218 OR ASTM A 929.

PIPE:
THE CSP SHALL BE MANUFACTURED IN ACCORDANCE WITH THE APPLICABLE REQUIREMENTS OF AASHTO M–36 OR ASTM A 760. THE PIPE SIZES, GAUGES AND CORRUGATIONS SHALL BE AS SHOWN ON THE PROJECT PLANS.

ALL FABRICATION OF THE PRODUCT SHALL OCCUR WITHIN THE UNITED STATES.

HANDLING & ASSEMBLY:
SHALL BE IN ACCORDANCE WITH NCSPA'S (NATIONAL CORRUGATED STEEL PIPE ASSOCIATION) RECOMMENDATIONS.

INSTALLATION:
SHALL BE IN ACCORDANCE WITH AASHTO STANDARD SPECIFICATIONS FOR HIGHWAY BRIDGES, SECTION 26, DIVISION II OR ASTM A 798 AND IN CONFORMANCE WITH THE PROJECT PLANS AND SPECIFICATIONS. IF THERE ARE ANY INCONSISTENCIES OR CONFLICTS, THE CONTRACTOR MUST BRING THEM TO THE ATTENTION OF THE PROJECT ENGINEER.

IT IS ALWAYS THE CONTRACTOR'S RESPONSIBILITY TO FOLLOW OSHA GUIDELINES FOR SAFE PRACTICES.

CONSTRUCTION LOADS:
CONSTRUCTION LOADS MAY BE HIGHER THAT FINAL LOADS. FOLLOW THE MANUFACTURERS OR NCSPA'S GUIDELINES.

CONTECH®
CONSTRUCTION PRODUCTS INC.
1001 GROVE STREET, MIDDLETOWN, OH 45044
PH: 1.800.338.1122 FAX: 513.425.5993
© COPYRIGHT

THIS PRINT IS OWNED BY CONTECH CONSTRUCTION PRODUCTS INC. AND MUST BE RETURNED UPON REQUEST. NOT TO BE COPIED.

CONTECH ID# 0000

SPECIFICATION

GALVANIZED
CORRUGATED STEEL PIPE
CONTECH DWG #1011248A

SCALE:	1" = 1'-0"
DRAWN BY:	JPP
DATE:	8/16/2000
REV. BY:	JSM
DATE:	3/2/05
SHEET:	1 of 1

H:\ACAD Data\ES Standard Details\Specs\CMP\CSP GALV SPEC (1011248).dwg 3/3/2005 3:58:32 PM EST

Vermont Agency of Transportation
RECEIVED
Abutment_WingWall_RetainingWall Submittal 1 120814_Resubmit 12.22.14.pdf
CK'D BY CLB OK'D BY DRP
December 9, 2014
RESUBMIT NO Approved
BY C. CARLSON DATE 12/22/14

Southern Pipe, In
P. O. Box 606, 135 Random Drive, N
Phone: 704-463-5202 Fax: 704-463

SCHEDULE 40 CONDUIT
HEAVY WALL RIGID PVC NONMETALLIC CONDUIT
FOR USE IN ABOVE GROUND AND UNDERGROUND APPLICATIONS

SIZE	PART NUMBER	DESCRIPTION	MIN WALL	O.D.	WEIGHT PER 100'	PALLET QTY
1/2"	41505 42505	10 FT BE 20 FT BE	.109	.840	16	6000 12000
3/4"	41508 42508	10 FT BE 20 FT BE	.113	1.050	22	4400 8800
1"	41510 42510	10 FT BE 20 FT BE	.133	1.315	32	3600 7200
1 1/4"	41512 42512	10 FT BE 20 FT BE	.140	1.660	43	3300 6600
1 1/2"	41515 42515	10 FT BE 20 FT BE	.145	1.900	52	2250 4500
2"	41520 42520	10 FT BE 20 FT BE	.154	2.375	70	1400 2800
2 1/2"	41525 42525	10 FT BE 20 FT BE	.203	2.875	125	930 1860
3"	41530 42530	10 FT BE 20 FT BE	.216	3.500	156	880 1760
3 1/2"	41535 42535	10 FT BE 20 FT BE	.226	4.000	188	630 1260
4"	41540 42540	10 FT BE 20 FT BE	.237	4.500	223	570 1140
	42550	20 FT BE	.258	5.563	310	380 760
6"	41560 42560	10 FT BE 20 FT BE	.280	6.625	395	260 520
*8"	41580	10 FT BE	.322	8.625	547	140

3" Conduit for the tensioning sleeves

Southern Pipe Schedule 40 Conduit is produced to the following Standards:

Underwriters Laboratory, Inc.® (UL)	UL 651
National Electrical Manufacturers Association (NEMA)	TC-2
National Electrical Manufacturers Association (NEMA)	TC-18
Federal Specification	WC-1094-A

* 8" Sch 40 is a non (UL) LISTED product

Rated for 90° C

UL LISTED

RUS listed
Sunlight Resistant

Vermont Agency of Transportation

RECEIVED

Abutment_WingWall_RetainingWall Submittal 1 120814_Resubmit 12.22.14.pdf

CK'D BY CLB OK'D BY DRP

December 9, 2014

RESUBMIT YES --------

BY C. CARLSON DATE 12/22/14

8

11/18/14
WFO

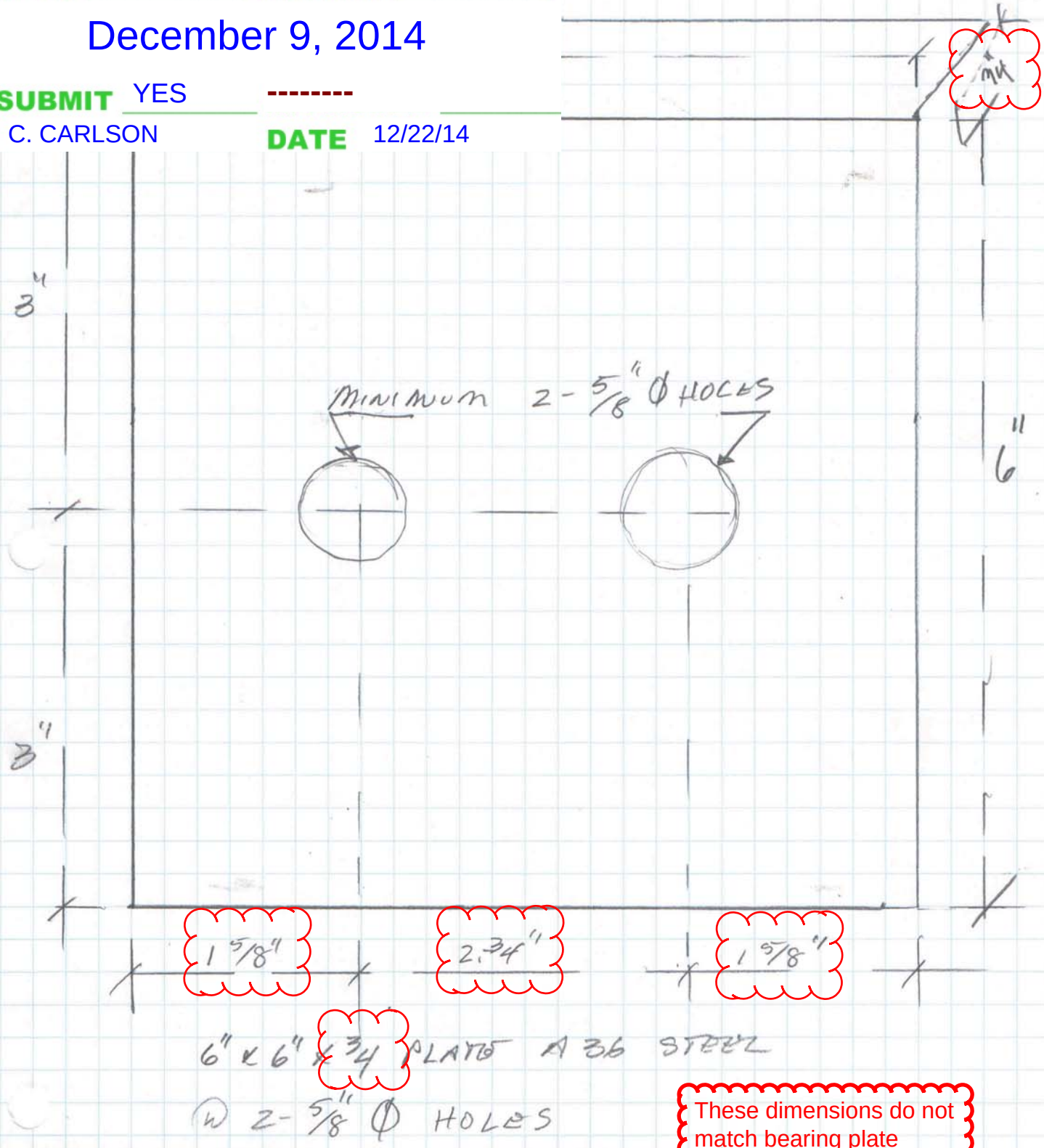

Bearing plate for tension ducts.

These dimensions do not match bearing plate details on shop drawing 8 of 11

Vermont Agency of Transportation

RECEIVED

Abutment_WingWall_RetainingWall Submittal 1 120814_Resubmit 12.22.14.pdf

CK'D BY CLB OK'D BY DRP

December 9, 2014

RESUBMIT NO Approved AsNoted

BY C. CARLSON DATE 12/22/14

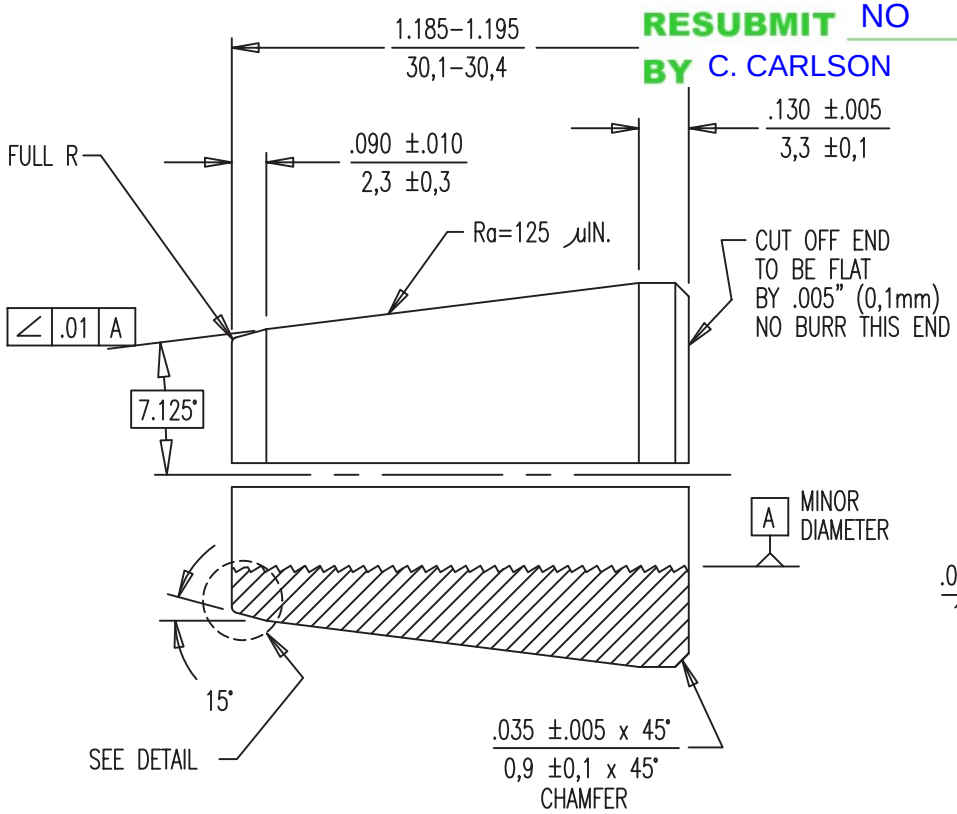

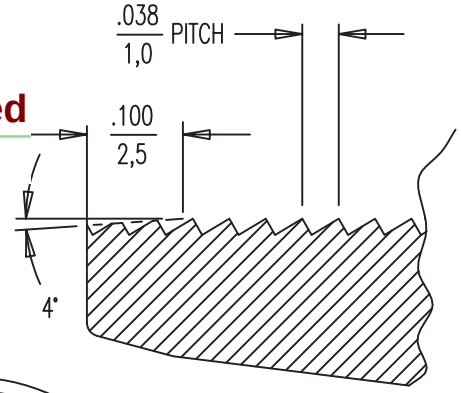

DETAIL

SCALE 5:1

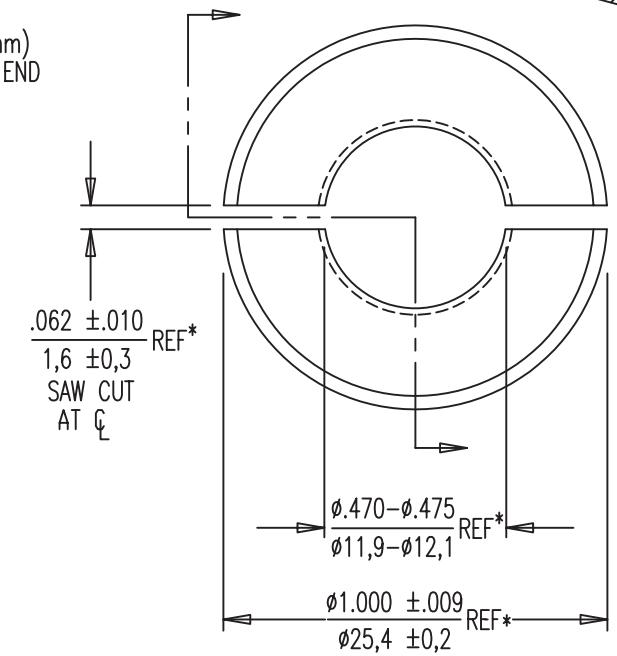

* ON UNCUT WEDGE.

NOTES:

1. INTERPRET THIS DRAWING PER ASME Y 14.5M–1994.
2. MAKE SURE THAT THE BUTRESS THREAD IS ORIENTED IN THE DIRECTION SHOWN ON THIS DRAWING.

5

Galvanized

PART NO.	DESCRIPTION
303525	UNCOATED
303526	ZINC PLATED

DYWIDAG POST–TENSIONING SYSTEMS

0.5" 2–PART WEDGE, 1.2" LONG

DATE: 10–21–94 | DWG: G. MALECKI | CHK: C.S. | APP: K.S.

This drawing, the pertinent enclossures, descriptions, calculations etc. and their contents are the property of DYWIDAG SYSTEMS INTERNATIONAL, USA, INC. They are not allowed to be duplicated with-out our permission. They are also not to be shown or explained for any reason to a third party other than for reasons expressly intended by the original receiver. They have to be returned on request.

DIMENSIONS: INCH/mm
mm FOR REFERENCE ONLY

Q.A.

QUALITY PLAN NUMBER: QS00000500S

TOLERANCES: ±.020 UNLESS NOTED

WEIGHT .134 LBS.

MATERIAL: 1" ROUND 12L14

SCALE 2:1 5:1

REV.	DATE	NAME	
1	06–03–96	C.S.	
2	06–28–96	C.S.	
3	09–29–97	A.W.	PB–105
4	01–05–98	A.W.	ECRN–0049
5	09–17–04	C.S.	ECRN–0104

PART NUMBER 303525 303526

DRAWING NUMBER 303525

DYWIDAG–SYSTEMS INTERNATIONAL, USA, INC. DSI

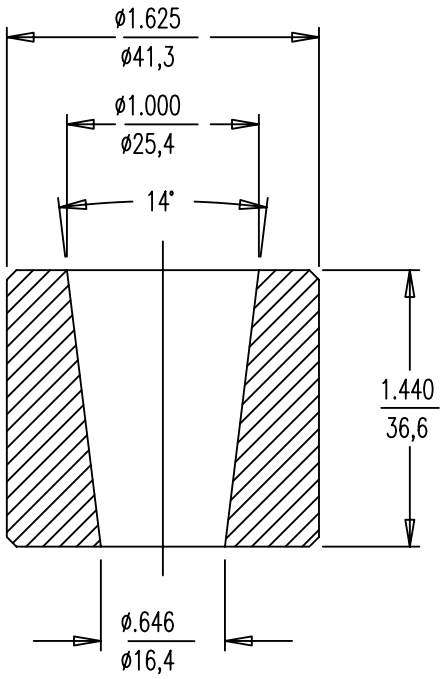

Vermont Agency of Transportation

RECEIVED

Abutment_WingWall_RetainingWall Submittal 1 120814_Resubmit 12.22.14.pdf

CK'D BY CLB OK'D BY DRP

December 9, 2014

RESUBMIT NO Approved AsNoted

BY C. CARLSON DATE 12/22/14

NOTE:
RECOMMENDED WEDGES:
-2-PART WEDGE 303525
FOR BARE STRAND
-3-PART WEDGE 303527
FOR GALVANIZED STRAND.

PART NO.	DESCRIPTION
303535	UNCOATED
303539	ZINC PLATED

Galvanized

DYWIDAG POST-TENSIONING SYSTEMS

0.5" BARREL CHUCK

DATE: 10-20-94 | DWG: G. MALECKI | CHK: C.S. | APP: K.S.

This drawing, the pertinent enclossures, descriptions, calculations etc. and their contents are the property of DYWIDAG SYSTEMS INTERNATIONAL, USA, INC. They are not allowed to be duplicated with-out our permission. They are also not to be shown or explained for any reason to a third party other than for reasons expressly intended by the original receiver. They have to be returned on request.

DIMENSIONS: INCH/mm
mm FOR REFERENCE ONLY

TOLERANCES:
±.020
UNLESS NOTED

MATERIAL: 6
ASTM A108,
1045 OR 1144

Q.A.

WEIGHT
.63
LBS.

SCALE
1:1

QUALITY PLAN NUMBER:
QS00028200S

REV.	DATE	NAME	
1	02-06-96	C.S.	
2	01-27-97	C.S.	ECRN-026
3	03-11-97	C.S.	
4	05-23-97	C.S.	
5	09-29-97	A.W.	PB-105
6	03-12-04	C.S.	ECRN-101

PART NUMBER
303535
303539

DRAWING NUMBER
303535

DYWIDAG-SYSTEMS INTERNATIONAL, USA, INC. DSI

Vermont Agency of Transportation

RECEIVED

Abutment_WingWall_RetainingWall Submittal 1 120814_Resubmit 12.22.14.pdf

CK'D BY CLB OK'D BY DRP

December 9, 2014

RESUBMIT NO Approved AsNoted

BY C. CARLSON DATE 12/22/14

INSERTS

E SLEEVE - U-X SERIES

The NMB SPLICE-SLEEVE is a mechanical coupler for splicing reinforcing bars which uses a cylindrical shaped steel sleeve filled with a Portland cement based non-shrink high early strength grout. Reinforcing bars to be spliced are inserted into the sleeve to meet approximately at the center of the sleeve. The interior of the sleeve is then filled with SS MORTAR grout.

- *System develops the tensile and compressive strengths in excess of the specified minimum for ASTM A615 and A706, Grade 60 bars conforming to the latest ACI 318 Building Code Requirements.*
- *Exceeds requirements of:*
  - Type 1 connection - 125% of grade 60 rebar
  - Type 2 connection - 150% of grade 60 rebar
- *Sleeve iron castings conform to proprietary specification based on ASTM A536-84*
- *SS Mortar meets the requirements for use in the sleeves under ICC-ESR 3433 and is required for use in NMB Splice Sleeve System*
- *Standard finish is plain. Zinc or epoxy coated available.*

Need to be epoxy coated

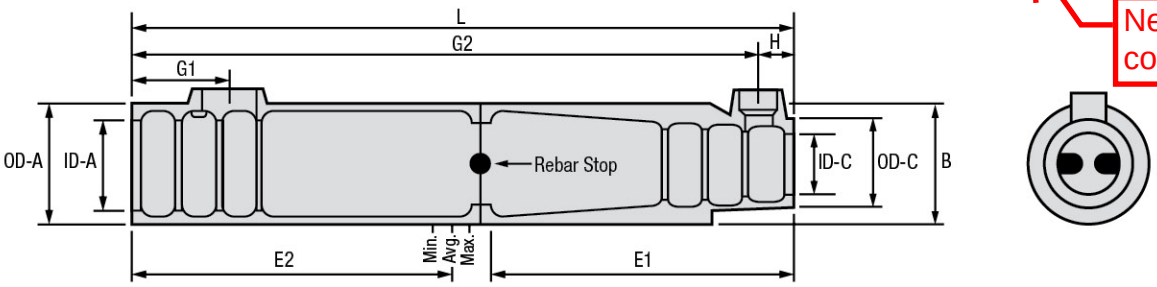

DIMENSIONS			Narrow End Diameter			Wide End Diameter		Grout Port Locations			
ALP Part #	Grade 60 Rebar Size	Sleeve Length L	ID-C	OD-C	Max Diameter B	ID-A	OD-A	G1	G2	H	Weight per sleeve (lbs)
SS 5U-X	#5	9-5/8"	7/8"	1-1/2"	1-7/8"	1-1/4"	1-7/8"	1-7/8"	8-3/4"	7/8"	3.09
SS 6U-X	#6	11-1/4"	1"	1-5/8"	2"	1-3/8"	2"	1-7/8"	10-3/8"	7/8"	3.70
SS 7U-X	#7	12-3/4"	1-1/8"	1-3/4"	2-3/8"	1-3/4"	2-3/8"	1-7/8"	11-7/8"	7/8"	5.10
SS 8U-X	#8	14-5/8"	1-1/4"	1-7/8"	2-1/2"	1-7/8"	2-1/2"	1-7/8"	13-5/8"	7/8"	5.86
SS 9U-X	#9	16-3/8"	1-3/8"	2"	2-5/8"	2"	2-5/8"	1-7/8"	15-1/2"	7/8"	7.21
SS 10U-X	#10	17-7/8"	1-5/8"	2-1/4"	2-7/8"	2-1/8"	2-7/8"	1-7/8"	17"	7/8"	9.47
SS 11U-X	#11	19-1/2"	1-3/4"	2-3/8"	3"	2-3/8"	3"	1-7/8"	18-5/8"	7/8"	10.80
SS 14U-X	#14	24-3/8"	2"	2-3/4"	3-1/2"	2-5/8"	3-1/2"	1-7/8"	23-3/4"	7/8"	19.70
SS 18U	#18	36-1/4"	2-5/8"	3-5/8"	4-1/2"	3-1/4"	4-1/4"	2-5/8"	35-1/2"	5/8"	52.50

Each Splice Sleeve Set includes the following: sleeve, washer (GRW), hole seals (HS) and plug (RP).

SPECIFICATIONS		Recommended Rebar Embedment Length					
ALP Part #	Grade 60 Rebar size	Factory Dowel - E1		Field Dowel - E2			Total Tolerences
		Min.	Max	Min.	Average	Max	
SS 5U-X	#5	4-1/8"	4-3/8"	4-1/8"	4-1/2"	4-7/8"	5/8"
SS 6U-X	#6	4-7/8"	5-1/8"	4-7/8"	5-3/8"	5-3/4"	5/8"
SS 7U-X	#7	5-3/4"	5-7/8"	5-3/4"	6-1/8"	6-1/2"	7/8"
SS 8U-X	#8	6-1/2"	6-3/4"	6-1/2"	7"	7-1/2"	7/8"
SS 9U-X	#9	7-3/8"	7-1/2"	7-3/8"	7-7/8"	8-3/8"	7/8"
SS 10U-X	#10	8-1/4"	8-3/8"	8-1/4"	8-5/8"	9-1/8"	7/8"
SS 11U-X	#9*	9"	9-1/8"	9"	9-1/2"	9-7/8"	1-7/16"*
	#11	9"	9-1/8"	9"	9-1/2"	9-7/8"	7/8"
SS 14U-X	#11*	11-3/8"	11-5/8"	11-3/8"	11-7/8"	12-3/8"	1-7/16"*
	#14	11-3/8"	11-5/8"	11-3/8"	11-7/8"	12-3/8"	7/8"
SS 18U	#18	17"	18-1/8"	17"	17-1/2"	18-1/8"	1"

Each sleeve is included with a washer (GRW), hole seals (HS) and plug (RP).
* Tolerances listed are based upon up-sizing of the sleeve in relation to the rebar to increase the total tolerances.

Vermont Agency of Transportation
RECEIVED
Abutment_WingWall_RetainingWall Submittal 1 120814_Resubmit 12.22.14.pdf

PATTERSON
Your Single Source Supplier

CK'D BY CLB OK'D BY DRP

December 9, 2014

RESUBMIT YES --------
BY C. CARLSON DATE 12/22/14

E - SNX11 & A11W

INSERTS

Elastomer Plugs (EP) are designed to prevent the intrusion of concrete into the Splice Sleeve during the casting of the concrete elements.

ALP Part #	Fits ALP Part #	Grade 60 Rebar Size	Material	Color
SS E0911	SS SNX11	#9	Elastomer	Yellow
	SS A11W	#9	Elastomer	Yellow
SS E11	SS SNX11	#11	Elastomer	Black
	SS A11W	#11	Elastomer	Black

* (1) Elastomer Plug included with each Splice Sleeve

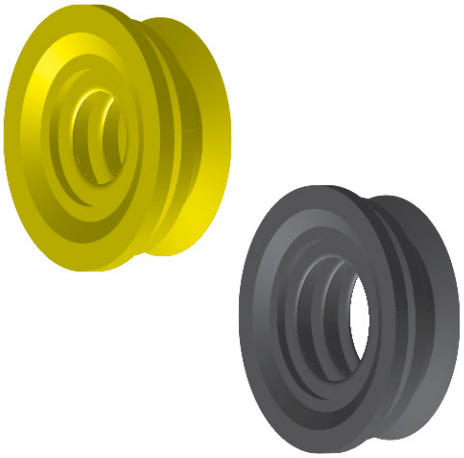

Why are these for #9 and #11 bars?
Should be for #5 and #7 bars.

INLET AND OUTLET TUBES

Inlet / Outlet Tubes are designed to attach to the Splice Sleeve to create path for the grout to be pumped from the concrete surface in to the Splice Sleeve. Tubes are installed into the splice sleeve and capped with a hole seal before casting of the concrete panels.

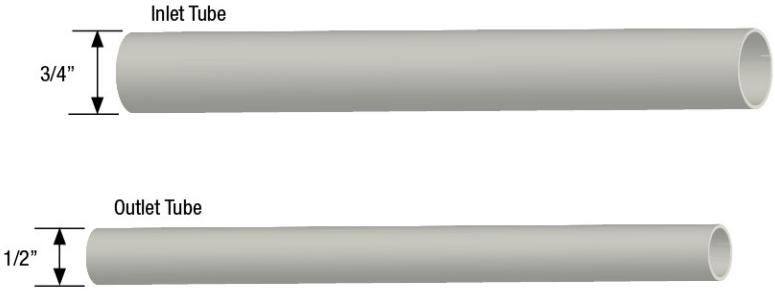

Grade 60 Rebar Size	Fits ALP Part #	Inlet PVC Tube	Outlet PVC Tube
#11	SS SNX11	3/4" Schedule 40 PVC Pipe*	1/2" Schedule 40 PVC Pipe*
	SS A11W		

* Not supplied by Splice Sleeve North America. Can be picked up at a local supplier.

HOLE SEALS

Hole Seals (HS) are plastic plugs designed to temporarily prevent intrusion of the concrete into PVC tube during casting of concrete elements.

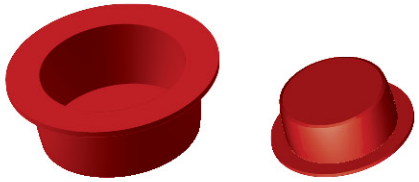

3/4" Inlet 1/2" Outlet

ALP Part #	PVC Pipe	Fits ALP Part #	Grade 60 Rebar Size
SS HSL	3/4"	SS SNX11	#11
		SS A11W	
	1/2"	SS SNX11	#11
		SS A11W	

*(1) Set of Hole Seals included with each Splice Sleeve
* Sold in sets of (1) 1/2" and (1) 3/4" Hole Seal

Vermont Agency of Transportation
RECEIVED
Abutment_WingWall_RetainingWall Submittal 1 120814_Resubmit 12.22.14.pdf

CK'D BY CLB OK'D BY DRP
December 9, 2014
RESUBMIT NO Approved
BY C. CARLSON DATE 12/22/14

EEVE - SS MORTAR

at 68° F

- High Ultimate Strength - exceeds 13,860 PSI in 28 days
- 35° F to 140° F ambient temperature application
- Fast 2-1/2 minute mixing time (depending on mixing speed)
- 6"-9-1/4" flowable acceptable range
- *See Splice Sleeve Engineering Sheet for proper mixing instructions

ALP Part #	Grade 60 Rebar Size	SS Mortar per Sleeve (lbs.)	Sleeves per Bag
SS 5U-X	#5	0.94	58.8
SS 6U-X	#6	1.31	42.0
SS 7U-X	#7	2.06	26.7
SS 8U-X	#8	2.7	20.4
SS 9U-X	#9	3.2	17.2
SS 10U-X	#10	4.01	13.7
SS 11U-X	#11	5.01	11.0
SS SNX11	#11	4.91	11.2
SS A11W	#11	6.07	9.1
SS 14U-X	#14	7.67	7.2
SS 18U	#18	22.62	2.4

- Factor in additional 0.25 lbs per sleeve for 5" long inlet and outlet tubes.
- Factor in additional 15% for waste and field loss.

GROUT WASHER

Grout Washers are custom metal washers with a rubber seal designed to prevent the intrusion of bedding mortar into the sleeve for post grout applications or to prevent leakage of SS Mortar out of the sleeve in pre-Grout applications.

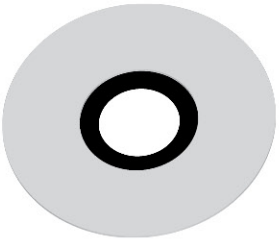

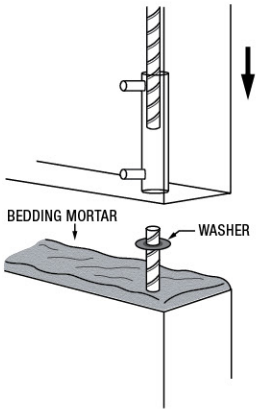

ALP Part #	Sleeve Size	Fits ALP Part #
SS G56	#5, #6	SS 5U-X, SS 6U-X
SS G789	#7, #8, #9	SS 7U-X, SS 8U-X, SS 9U-X
SS G10	#10	SS 10U-X
SS G11	#11	SS 11U-X, SS SNX11
SS GA11W	#11	SS A11W
SS GRW14	#14	SS 14U-X
SS GRW18	#18	SS 18-X

*(1) Grout Washer included with each Splice Sleeve

COIL SPRING

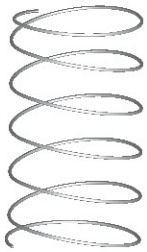

Coil Springs are designed to support the grout washer tight against the Splice Sleeve during the grouting process.

ALP Part #	Sleeve Size
SS CS	#5-#18

LARGE TAPER SPRING

Large taper springs are a heavy duty spring designed to support the grout washer tight against the Splice Sleeve in Pre-Grout applications.

ALP Part #	Sleeve Size
SS CSLT	#5-#18

Vermont Agency of Transportation
RECEIVED
Abutment_WingWall_RetainingWall Submittal 1 120814_Resubmit 12.22.14.pdf
CK'D BY CLB OK'D BY DRP
December 9, 2014
RESUBMIT NO Approved
BY C. CARLSON DATE 12/22/14

1. SS MORTAR® (GROUT) ENGINEERIN

SS Mortar® (Grout) manufactured by Splice Sleeve Jap
filler grout developed for the NMB Splice-Sleeve® Sy
warranties, expressed or otherwise implied.

SS Mortar® (Grout) is packaged
required quantity of SS Mortar®

High Early Strength: The grout in a flowable consistency will attain above 4,000 psi in less than 24 hr. at a temperature of 68°F (20°C). Rapid strength gain allows erection to continue.

High Ultimate Strength: The grout attains 14,000 psi compressive strength in 28 days at 68°F (20°C).

SS Mortar® is a ready-to-use formulation requiring only the proper amount of water, which is suggested at 0.98 gal. = 125 fl. oz. = 3.7 liters per bag. The maximum water is 1.03 gal. = 132 fl. oz. = 3.9 liters. Do not use admixtures.

Mixing time is a minimum of 2½ minutes with ≥ 7 amp electric mixer, providing 500 to 1,300 rpm and a proper paddle.

Table I-3: Grout Requirement for Sleeves

REBAR Size		Splice-Sleeve	SS Mortar	
U.S.	Metric	Model	lb./sleeve	Sleeves/Bag
#5	16 MM	5 U-X	0.94	**58.8**
#6	20 MM	6 U-X	1.31	**42.0**
#7	22 MM	7 U-X	2.06	**26.7**
#8	25 MM	8 U-X	2.7	**20.4**
#9	28 MM	9 U-X	3.2	**17.2**
#10	32 MM	10 U-X	4.01	**13.7**
#11	35 MM	11 U-X	5.01	**11.0**
#11	35 MM	SNX 11	4.91	**11.2**
#11	35 MM	A11W	6.07	**9.1**
#14	40 MM	14 U-X	7.67	**7.2**
#18	57 MM	18 U	22.62	**2.4**
Inlet + Outlet PVC tubes x 5"			0.25	**≈ 225**

Note: Always mix full bags: no partial bags

Year	11	12	13	14	15	16	17	18	19	20		
	A	B	C	D	E	F	G	H	I	J		
Month	1	2	3	4	5	6	7	8	9	10	11	12
	A	B	C	D	E	F	G	H	I	J	K	L
Day	As a number from 1 to 31											

Grout quantities shown in the table above are in dry powder weight of the grout to fill the space inside the sleeve after both rebars have been inserted into the sleeve. If pumping grout tubes add a little more-see example on chart. When "upsizing" add 20% for each rebar size.

An additional overage of 15% is recommended to provide for typical waste and field loss while continuously pumping large numbers of sleeves. The above overage does not cover losses from "left over" waste in the bucket, pump, hose and elsewhere. It is recommended that you allow an additional bag per grouting session. Better to have a bit too much than a bit too little and delay the job.

SS Mortar® should be stored in moderate/cool and dry conditions. It has a "freshness" bag life of one (1) year. Bags have a date stamp on the top using letters for the year (10 year period) followed by month and the last numbers mentions the day as shown in Table and Figure.

CF 25: 13 - 06 - 25 = June 25, 2013

Vermont Agency of Transportation
RECEIVED
Abutment_WingWall_RetainingWall Submittal 1 120814_Resubmit 12:22.14.pdf
CK'D BY CLB OK'D BY DRP
December 9, 2014
RESUBMIT NO Approved
BY C. CARLSON DATE 12/22/14

2. SS MORTAR® (GROUT) PERFORMAN

Table I-4: SS Mortar® (Grout) -

Water volume	Mix Temp	Curing Temp	Set Time Hi			
			Initial			
0.98 gal (3.7 liters)	**68**°F (20°C)	**41**°F (5°C)	9 hr. 31 min.	13 l		
		68°F (20°C)	4 hr. 18 min.	5 hr. 55 min.	6 5/8" (170 mm)	0.00%
		86°F (30°C)	2 hr. 23 min.	3 hr. 20 min.	6 1/2" (165 mm)	0.00%

Non-metallic, SS Mortar® must be used when the surrounding concrete and sleeve temperature is between 35°F to 140°F (2°C to 60°C). Freezing grout, before it achieves 1,500 psi will deplete strength. The grout should be mixed and pumped between 50°F and 95°F (10°C to 35°C). In extreme temperatures warm or iced water can be added to adjust mortar temperature. As per the Table shown below, strength gain of SS Mortar® is directly related to temperature and thus freezing/very cold conditions may require a heating plan until connection strength is reached allowing continued erection and structural specifications. (See Splice Sleeve User's Manual and/or call Splice Sleeve directly).

Table I-5: SS Mortar® (Grout) - Compressive Strength Time vs. Temperature

Curing Temperature	Compressive Strength, psi (MPa)					
	12 hrs.	18 hrs.	1 day	3 days	7 days	28 days
41°F (5°C)	----	**834** (6)	**1,869** (13)	**5,823** (40)	**8,871** (61)	**13,860** (96)
50°F (10°C)	**410** (3)	**1,869** (13)	**2,905** (20)	**6,858** (47)	**9,907** (68)	**14,895** (103)
68°F (20°C)	**1,869** (13)	**3,328** (23)	**4,364** (30)	**8,317** (57)	**11,366** (78)	**16,354** (113)
86°F (30°C)	**2,905** (20)	**4,364** (30)	**5,399** (37)	**9,352** (64)	**12,401** (86)	**17,389** (120)
104°F (40°C)	**3,708** (26)	**5,167** (36)	**6,202** (43)	**10,155** (70)	**13,204** (91)	**18,192** (125)

Calculated strength — calculated from the formula (24.758 Ln x Cumulative Temperature) -54.183

Consistency Flow tests are run using a "Flow Guide". The diameter of the "puddle" should be between 155 mm (6") minimum to 235 mm (9 ¼") maximum. The Flow Guide consists of a 2 in. (50 mm) diameter x 4 in. (100 mm) cylinder placed in the center of a level, smooth, non-absorbent surface. After filling and lifting the cylinder, the diameter of the resulting "puddle" of grout is measured. Figure below shows the step by step procedure for the flow test.

Details of the procedure are described in **GROUTPRO-N1**: "Recommended Procedure for Field Sampling and Testing SS Mortar®".

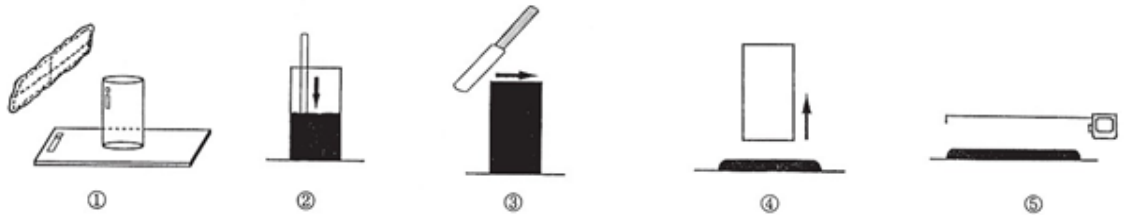

Related Documents:

- Material Safety Data Sheet: SS Mortar®
- Users' Manual for NMB Splice-Sleeve® System
- GROUTPRO-N1: Recommended Procedure for Field Sampling & Testing SS Mortar®
- Splice Sleeve "Grout Operation" slideshow.

Deslauriers

VERS-A-SHIM® MULTI-PACKS

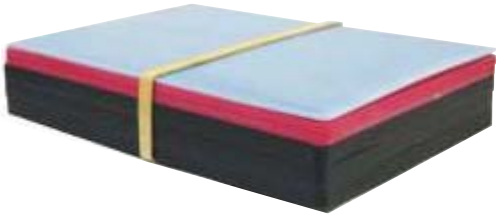

- Pre-assembled packages of shims designed for precise placing of large load bearing precast units.
- Each shim has no-slip serrations.
- Eliminates correction of elastomeric drift.
- Can be compressed sufficiently at post tensioning to allow load transfer to the grout.
- Vers-A-Shim® Multi-Packs are unaffected by liquids, ground chemicals, alkalis and micro-organisms.
- Performance characteristics are stable and predictable.

CAT# SP44MB: 4” Width, 4” Length, 1-1/16” Height.
CAT# SP46MB: 4” Width, 6” Length, 1-1/16” Height.

Vers-A-Shim Multi-Packs are 1-1/16” high and each pack consists of:

- One (1) 1/16” shims.
- Two (2) 1/8” shims.
- Three (3) 1/4" shims.

Shims for under retaining wall stem.

Shims are rubber-banded together for easy height adjustment and color coded by thickness. Each shim has no-slip serrations.

Engineering Specifications

- Compressive strength of 10.000 psi
- Coefficient of linear expansion is 3 to 5 x 10-5 inches/inch/°C.

Vermont Agency of Transportation
RECEIVED
Abutment_WingWall_RetainingWall Submittal 1 120814_Resubmit 12.22.14.pdf

CK'D BY CLB OK'D BY DRP

December 9, 2014

RESUBMIT NO Approved

BY C. CARLSON DATE 12/22/14

Telephone 215-855-8713 FAX 215-855-8714

GARY K. MUNKELT & ASSOCIATES

Consulting Engineers
Precast Concrete, Structural, Civil

1180 Welsh Rd. Suite 190 North Wales, PA 19454

12/8/14

PROJECT: CHECK CAPACITY OF LIFT SYSTEM COMPONENTS TO LIFT PRECAST CONCRETE ABUTMENT, WINGWALL, RETAINING WALL

CLIENT: S.D. IRELAND
WILLISTON, VT

LOCATION: STOWE BRF 0235
STOWE, VT

STATE OF VERMONT
GARY K. MUNKELT
NO. 6291
REGISTERED
PROFESSIONAL ENGINEER

TABLE OF CONTENTS

Title	Sheet
Abutment Lifting Detail	2
Wing Wall Lifting Detail	3
Retaining Wall Lifting Detail	4
Appendix A: Cable Componen	
Appendix B: Insert Componen	

Vermont Agency of Transportation
RECEIVED
Abutment_WingWall_RetainingWall Submittal 1 120814_Resubmit 12.22.14.pdf
CK'D BY CLB OK'D BY DRP
December 9, 2014
RESUBMIT NO Approved
BY C. CARLSON DATE 12/22/14

Job No. 141228

Verify that either a spreader bar will be used, two master links, or four 12.5 TON shackles. Side view isn't clear and cannot have two cables on one 12.5 TON shackle since it would result in 2*23,000 lb = 46000lb

Abutment Lifting Detail

*AB1N Shown as it is the heaviest one.

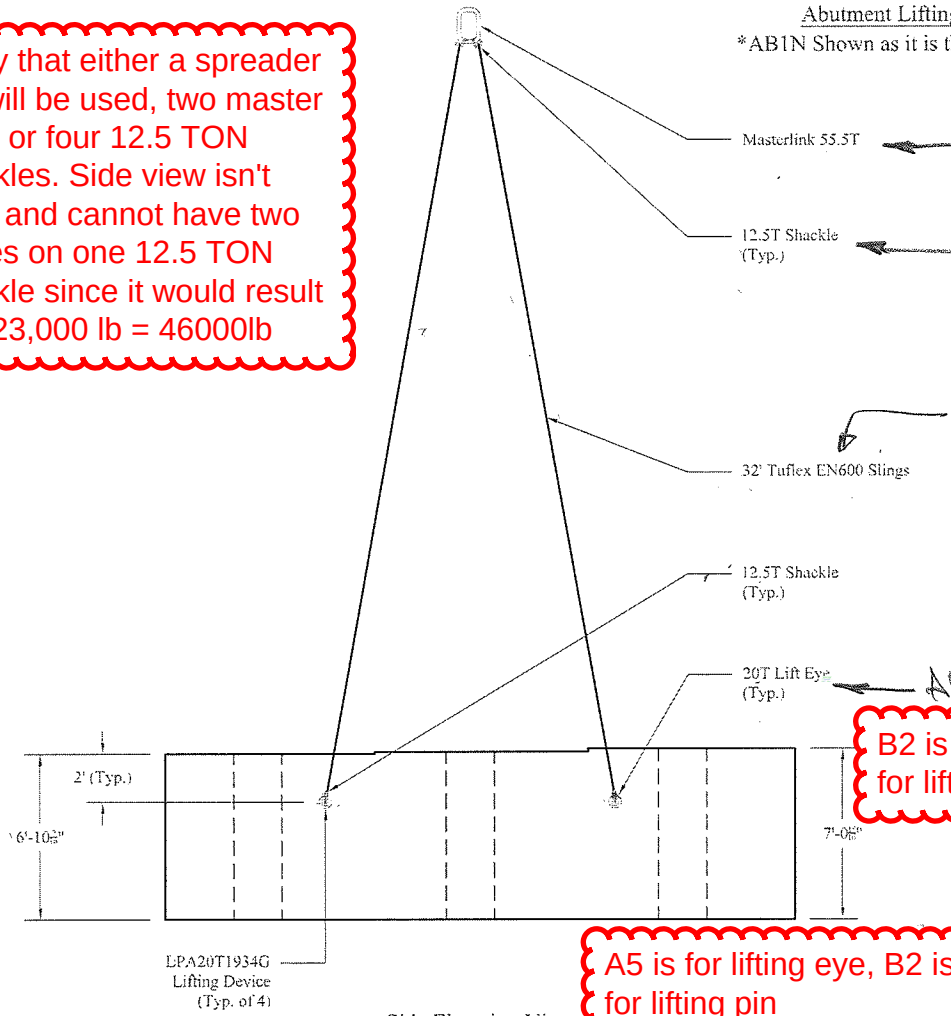

Side Elevation View

APPENDIX A1
FOR MASTERLINK - WLL = 84300 lb < 111000 lb

APPENDIX 4
FOR SHACKLE WLL = 23000 lb < 25000 lb

FOR SLING APPENDIX A2 WLL = 23000 lb < 53000 lb

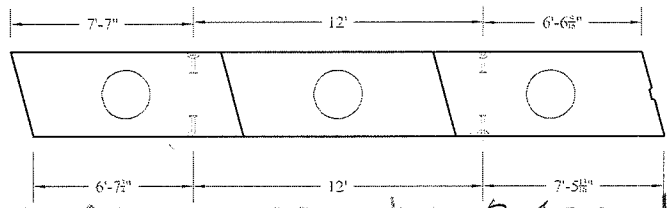

Plan View

APPENDIX B2 WLL = 23000 lb < 24000 lb

40,000lb

B2 is for lifting pin, A5 is for lifting eye

LOAD PER CABLE

$\frac{84300 \text{ lb}}{4} \times \underset{\text{IMPACT}}{1.1} = 23000 \text{ lb}$ WORKING LOAD

A5 is for lifting eye, B2 is for lifting pin

APPENDIX A5 = 23000 lb < $\frac{200000}{5}$ = 40000 lb

SHEET 2

Weight: 84,300 lbs

PRECAST CONCRETE ABUTMENT SHOP DRAWINGS (SDI JOB #15163)		INSTALLER: CCS Construction 138 Munson Ave Morrisville, VT 05661 PH: 802-888-7701	FABRICATOR: 193 INDUSTRIAL AVE. WILLISTON, VT 05495 Ph: (802) 658-0201 SD Ireland Precast Division
SUPERVISOR: M. WHEELER DETAILER: I. ADAMS CHECKER: E. Barendse ENGINEER:	PROJECT NAME: Stowe BRF 0235 (II) PROJECT #: 0235 (II) LOCATION: Stowe, VT	12/03/14	Lifting 1 of 3

Vermont Agency of Transportation

RECEIVED

Abutment_WingWall_RetainingWall Submittal 1 120814_Resubmit 12.22.14.pdf

CK'D BY CLB OK'D BY DRP

December 9, 2014

RESUBMIT YES --------

BY C. CARLSON DATE 12/22/14

Wing Wall Lifting Detail

*WW-2 Shown as this is the heaviest one.

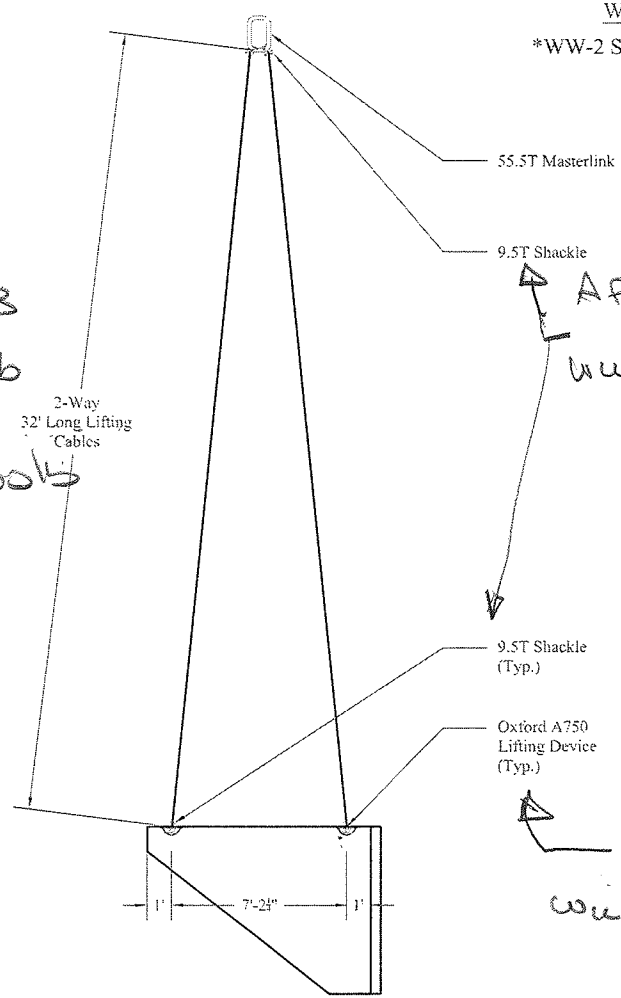

From Appendix A1
WW = 9450 lb < 111000 lb

Appendix A3
WW = 9450 lb
< 19600 lb

Appendix A4
WW = 5200 lb < 19000 lb

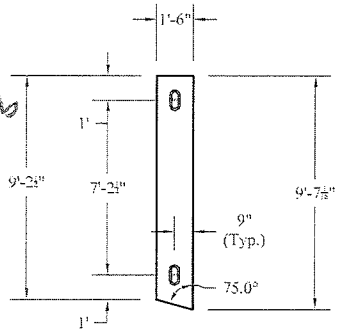

Plan View

Load Per Cable

$$\frac{9450 \times 1.1}{2} = 5200 \text{ lb}$$

Appendix B1
WW = 5200 lb < 10000 lb

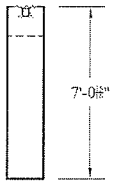

Section View

Left WW

Weight: 9,450 lbs

PRECAST CONCRETE ABUTMENT SHOP DRAWINGS (SDI JOB #15163)	INSTALLER: CCS Construction, 138 Munson Ave, Morrisville, VT 05661, PH: 802-888-7701	FABRICATOR: 193 INDUSTRIAL AVE. WILLISTON, VT 05495 Ph: (802) 658-0201	SD Ireland Precast Division
SUPERVISOR: M. WHEELER DETAILER: I. ADAMS CHECKER: E. Barendse ENGINEER:	PROJECT NAME: Stowe BRF 0235 (II) PROJECT #: 0235 (II) LOCATION: Stowe, VT	12/03/14	Lifting — 2 of 3

Vermont Agency of Transportation
RECEIVED
Abutment_WingWall_RetainingWall Submittal 1 120814_Resubmit 12.22.14.pdf

CK'D BY CLB OK'D BY DRP

December 9, 2014

RESUBMIT NO Approved

BY C. CARLSON DATE 12/22/14

Retaining Wall Lifting Detail

LOAD PER CABLE

$\frac{65700\ lb \times 1.1}{4} = 18100\ lb$

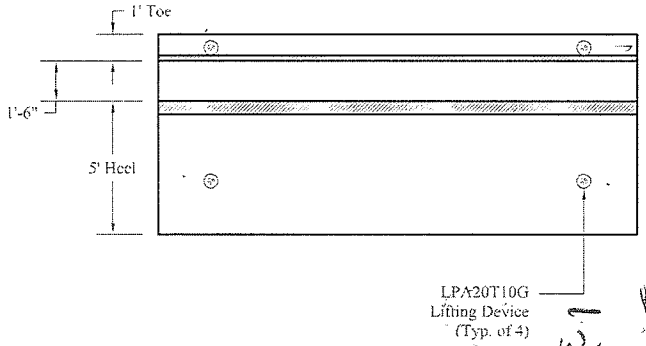

Plan View

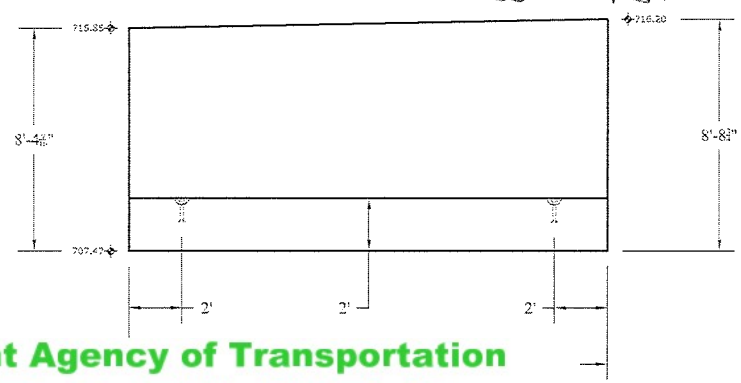

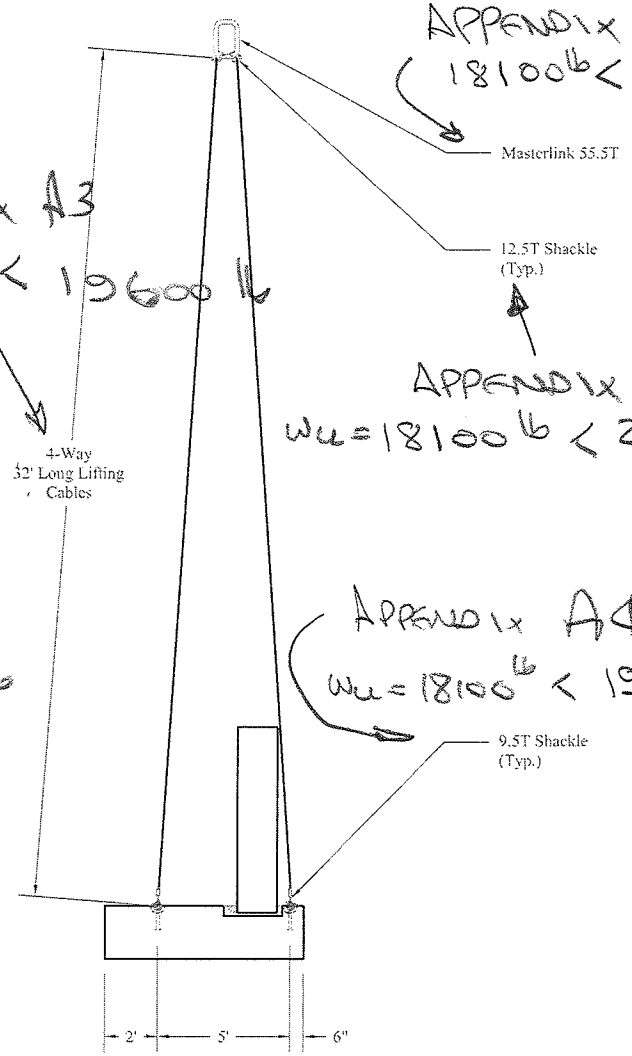

Section View

APPENDIX A1
$18100\ lb < 111000\ lb$

APPENDIX A3
$W_{LL} = 18100 < 19600\ lb$

APPENDIX A4
$W_{LL} = 18100\ lb < 25000\ lb$

APPENDIX B2
$W_{LL} = 18100\ lb < 18270\ lb$

APPENDIX A5
$W_{LL} = 18100\ lb < 200000\ lb$

APPENDIX A4
$W_{LL} = 18100\ lb < 19000\ lb$

SHEET 4

Weight: 65,700 lbs

PRECAST CONCRETE ABUTMENT SHOP DRAWINGS (SDI JOB #15163)		INSTALLER: CCS Construction 138 Munson Ave Morrisville, VT 05661 PH: 802-888-7701	FABRICATOR: 193 INDUSTRIAL AVE. WILLISTON, VT 05495 Ph: (802) 658-0201 SD Ireland Precast Division
SUPERVISOR: M. WHEELER DETAILER: I. ADAMS CHECKER: E. Barendse ENGINEER:	PROJECT NAME: Stowe BRF 0235 (II) PROJECT #: 0235 (II) LOCATION: Stowe, VT	12/03/14	Lifting — 3 of 3

Vermont Agency of Transportation

RECEIVED

Abutment_WingWall_RetainingWall Submittal 1 120814_Resubmit 12.22.14.pdf

CK'D BY CLB OK'D BY DRP

December 9, 2014

RESUBMIT NO Approved

BY C. CARLSON DATE 12/22/14

NI | Round Steel Chain

Round steel chains for use in lifting. Maximum working temperature: 400°F. Standard surface: blasted, clear painted.

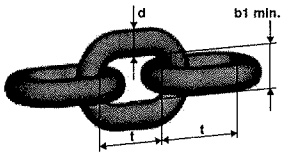

Code	Size	Nominal diameter d	Standard delivery length [feet]	Pitch t	Inside width b1 min.	Outside width b2 max.	WLL [lb]	Breaking force [lb]	Weight [lb/ft]
NI5.50	7/32″	0.217	400	0.67	0.31	0.83	2,700	10,800	0.470
NI70	9/32″	0.276	800	0.83	0.39	0.98	4,300	17,200	0.738
NI80	5/16″	0.315	500	0.94	0.43	1.14	5,700	22,800	0.939
NI100	3/8″	0.394	400	1.18	0.55	1.42	8,800	35,200	1.475
NI130	1/2″	0.512	200	1.54	0.71	1.85	15,000	60,000	2.548
NI160	5/8″	0.630	150	1.89	0.87	2.28	22,600	90,400	3.830
NI200	3/4″	0.787	100	2.44	1.02	2.80	35,300	141,200	5.780
NI220	7/8″	0.866	100	2.60	1.18	3.11	42,700	170,800	7.324
NI260	1″	1.024	100	3.07	1.38	3.70	59,700	238,800	10.214
NI320	1-1/4″	1.260	50	3.78	1.69	4.53	90,400	361,600	15.455

NEW

A | Master Link

Master link for 1 or 2 leg chain sling.

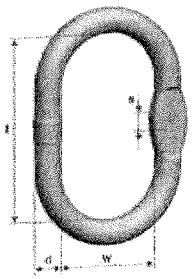

Code	WLL 0-45° [lb]	d [inch]	t [inch]	w [inch]	s [inch]	Weight [lb/pc.]	Master link for chain 1-leg	Master link for chain 2-leg
A100	3,800	0.39	3.15	1.97	0.39	0.31	7/32″	-
A130	5,800	0.51	4.33	2.36	0.39	0.75	9/32″	7/32″
A160	7,500	0.63	4.33	2.36	0.55	1.17	5/16″	9/32″
A180	10,000	0.75	5.31	2.95	0.55	2.03	3/8″	5/16″
A220	16,700	0.91	6.30	3.54	0.67	3.53	1/2″	3/8″
A260	26,000	1.06	7.09	3.94	0.79	5.42	5/8″	1/2″
A320	39,100	1.30	7.87	4.33	1.02	9.13	3/4″	5/8″
A360	61,100	1.42	10.24	5.51	-	13.72	7/8″	3/4″
A450	83,100	1.77	13.39	7.09	-	28.27	1″	7/8″
A500	111,000	1.97	13.78	7.48	-	36.49	1-1/4″	1″
A560	156,600	2.36	15.75	7.87	-	59.56	-	1-1/4″
A720	234,900	2.76	18.11	9.84	-	99.23	-	-

Vermont Agency of Transportation
RECEIVED
Abutment_WingWall_RetainingWall Submittal 1 120814_Resubmit 12.22.14.pdf

CK'D BY CLB OK'D BY DRP

December 9, 2014

RESUBMIT NO Approved

BY C. CARLSON DATE 12/22/14

APPENDIX A2

TUFLEX ENDLESS ROUNDSLINGS

Tuflex Endless (EN)
The Most Versatile *Tuflex* Roundsling

Features, Advantages and Benefits

Maintains all the basic *Tuflex* features plus...

Promotes Safety

- Load stability and balance can be achieved by spreading sling legs.

Saves Money

- Wear points can be shifted to extend sling life
- The most flexible style of sling

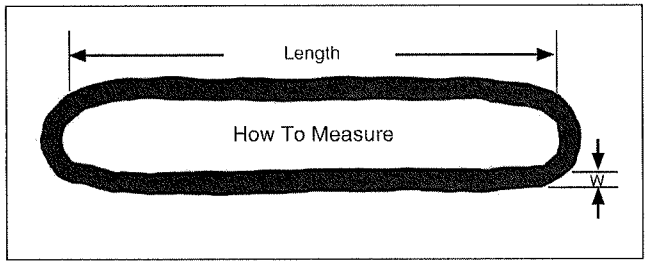

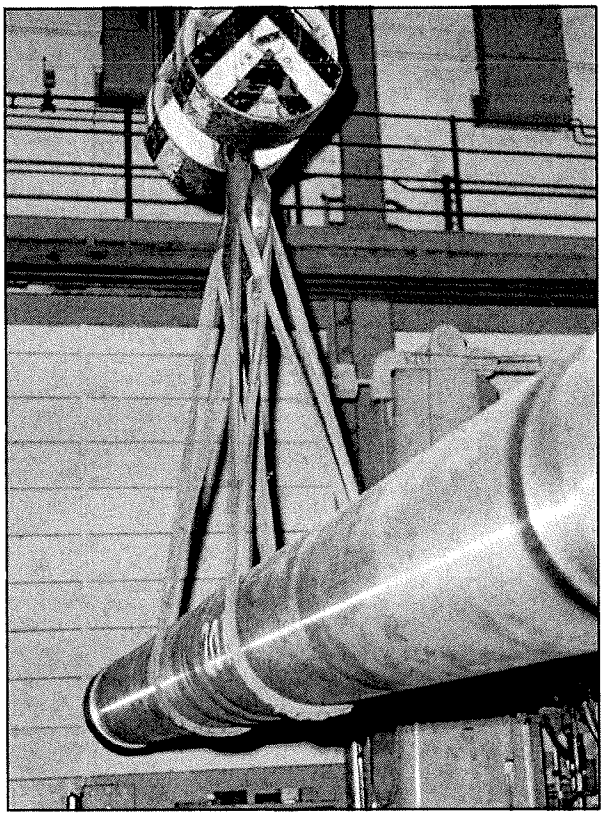

Part No.	Color	Rated Capacity (lbs.)* Vertical	Choker	Basket @ 90°	Basket @ 45°	Minimum Length (ft.)	Approximate Measurements Weight (lbs. / ft.)	Body Dia. Relaxed (in.)	(W) Width at Load (in.)	Minimum Hardware Dia. ** (in.)
EN30	Purple	2,600	2,100	5,200	3,600	1 1/2	.2	5/8	1	7/16
EN60	Green	5,300	4,200	10,600	7,400	1 1/2	.3	7/8	1 3/8	5/8
EN90	Yellow	8,400	6,700	16,800	11,800	3	.5	1 1/8	1 3/4	3/4
EN120	Tan	10,600	8,500	21,200	14,000	3	.6	1 1/8	1 7/8	7/8
EN150	Red	13,200	10,600	26,400	18,000	3	.8	1 3/8	2	1
EN180	White	16,800	13,400	33,600	23,000	3	.9	1 3/8	2 1/8	1 1/8
EN240	Blue	21,200	17,000	42,400	29,000	3	1.3	1 3/4	2 5/8	1 3/16
EN360	Grey	31,000	24,800	62,000	43,000	3	1.7	2 1/4	3 1/4	1 1/2
EN600	Brown	53,000	42,400	106,000	74,000	8	2.8	2 3/4	4	2
EN800	Olive	66,000	52,800	132,000	93,0					
EN1000	Black	90,000	72,000	180,000	127,					

Used when lifting the abutment pieces.

* ⚠ WARNING Do not exceed rated capacities. Sling capacity dec
Slings should not be used at angles of less than 30
Refer to Effect of Angle chart page 12.
** This is the smallest recommended connection ha

Vermont Agency of Transportation
RECEIVED
Abutment_WingWall_RetainingWall Submittal 1 120814_Resubmit 12.22.14.pdf

CK'D BY CLB OK'D BY DRP

December 9, 2014

RESUBMIT NO Approved
BY C. CARLSON DATE 12/22/14

PERMALOC WIRE ROPE SLINGS

Lift-All Permaloc Slings are made using the flemish splice technique to form the eyes. Unlike the simple return loop method that places 100% of its strength on the swaged sleeve, *Permaloc* slings have reserve strength should the sleeve become damaged in use.

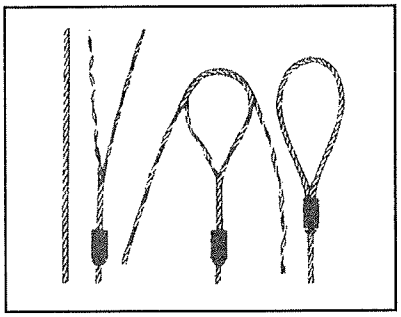

Features, Advantages and Benefits

Maintains all the basic *Lift-All* wire rope sling features plus ...

Promotes Safety

- Reserve strength - integrity of eyes not solely dependent upon steel sleeves
- IWRC resists crushing better than FC ropes

Saves Money

- When specified, thimble eyes protect wire rope from wear for increased life
- Good abrasion resistance for longer life

Permaloc With Single Part Body

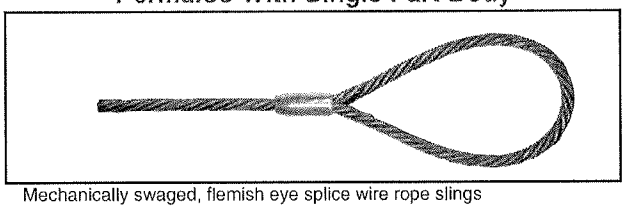

Mechanically swaged, flemish eye splice wire rope slings

IWRC (Independent Wire Rope Core)

Fiber core available at reduced capacities

Wire Rope

Wire Rope Class	Rope Dia. (in.)	EIP, IWRC ¹ Rated Capacity (tons)* Vertical	Choker	V. Basket	² Min. Sling Length	Standard Eye Size (in.) W x L	Thimbled Eye Size (in.) W x L	Eye Hook Cap. (tons)	Crescent Thimble Eye Size (in.) W x L	Slip Thru Thimble Eye Size (in.) W x L	Sliding Choker Hook (in.)
6 x 19 EIP, IWRC	1/4	.65	.48	1.3	1' 6"	2 x 4	7/8 x 1 5/8	1	2 x 4	2 1/8 x 4 1/8	3/8
	5/16	1.0	.74	2.0	1' 9"	2 1/2 x 5	1 1/16 x 1 7/8	1	2 x 4	2 1/2 x 4 1/8	3/8
	3/8	1.4	1.1	2.9	2' 0"	3 x 6	1 1/8 x 2 1/8	1 1/2	2 x 4	2 1/2 x 4 1/8	3/8
	7/16	1.9	1.4	3.9	2' 3"	3 1/2 x 7	1 1/4 x 2 1/4	2	2 x 5	2 3/8 x 4 3/8	1/2
	1/2	2.5	1.9	5.1	2' 6"	4 x 8	1 1/2 x 2 3/4	3	2 1/4 x 6	2 3/8 x 4 3/8	1/2 **
	9/16	3.2	2.4	6.4	2' 9"	4 1/2 x 9	1 1/2 x 2 3/4	4 1/2	2 1/4 x 7	2 3/8 x 4 3/8	5/8
	5/8	3.9	2.9	7.8	3' 0"	5 x 10	1 3/4 x 3 1/4	4 1/2	2 3/4 x 7	3 3/8 x 6 5/8	5/8 **
	3/4	5.6	4.1	11	3' 6"	6 x 12	2 x 3 3/4	7	3 1/4 x 8 1/2	3 3/8 x 6 5/8	3/4 **
	7/8	7.6	5.6	15	4' 0"	7 x 14	2 1/4 x 4 1/4	11	4 1/2 x 10	3 3/4 x 7 1/8	7/8
	1	9.8	7.2	20	4' 6"	8 x 16	2 1/2 x 4 1/2	11	4 1/2 x 11 1/2	3 3/4 x 7 1/8	1
	1 1/8	12	9.1	24	5' 0"	9 x 18	2 7/8 x 5 1/8	15	4 7/8 x 13	4 3/8 x 8 3/8	1 1/8
							3 1/2 x 6 1/2	15	5 1/2 x 14 1/2	4 3/8 x 8 3/8	1 1/4
6 x 37 EIP, IWRC	1 3/8	18	13	36	6' 0"	11 x 22	3 1/2 x 6 1/4	22	6 x 16	5 x 9 1/2	1 3/8
	1 1/2	21	16	42	7' 0"	12 x 24	3 1/2 x 6 1/4	22	6 x 17 1/2	5 x 9 1/2	1 1/2**
	1 3/4	28	21	57	8' 0"	14 x					
	2	37	28	73	9' 0"	16 x					
	2 1/4	44	35	89	10' 0"	18 x					
	2 1/2	54	42	109	11' 0"	20 x					

(4) 32' long wire rope

Used when lifting the wing walls and the retaining wall.

Note: Larger diameter slings available. Basket ratings are based on a minimum D/d

1. 1 Ton = 2,000 lbs.
2. Minimum sling length when using standard eyes.

Note: **Length Tolerances** - Single Part Wire Rope Slings - Standard length toleranc is plus or minus two rope diameters, or plus or minus 0.5% of the sling length, whiche

** See page 91 for reduced choker capacity when using these hook sizes.

Vermont Agency of Transportation
RECEIVED
Abutment_WingWall_RetainingWall Submittal 1 120814_Resubmit 12.22.14.pdf
CK'D BY CLB OK'D BY DRP
December 9, 2014
RESUBMIT NO Approved
BY C. CARLSON DATE 12/22/14

APPENDIX A4

Crosby® Alloy Screw Pin Shackles

Load Rated® QT QUENCHED & TEMPERED QUIC-CHECK®

APPLICATION INSTRUCTIONS
SEE PAGE 89 OF THE GENERAL CATALOG

G-209A

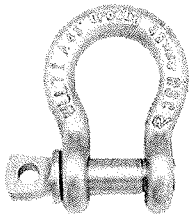

G-209A Screw pin anchor shackles meet the performance requirements of Federal Specification RR-C-271F Type IVA, Grade B, Class 2, except for those provisions required of the contractor. For additional information, see page 444.

- Capacities 2 thru 21 metric tons. Meets performance requirements of Grade 8 shackles.
- Forged Alloy Steel – Quenched and Tempered, with alloy pins.
- Working Load Limit permanently shown on every shackle.
- Hot Dip Galvanized.
- Shackles can be furnished proof tested with certificates to designated standards, such as ABS, DNV, Lloyds, or other certification. Charges for proof testing and certification available when requested at the time of order.
- Approved for use at -40 degree C (-40 degree F) to 204 degree C (400 degree F).
- Meets or exceeds all requirements of ASME B30.26 including identification, ductility, design factor, proof load and temperature requirements. Importantly, these shackles meet other critical performance requirements including fatigue life, impact properties and material traceability, not addressed by ASME B30.26.

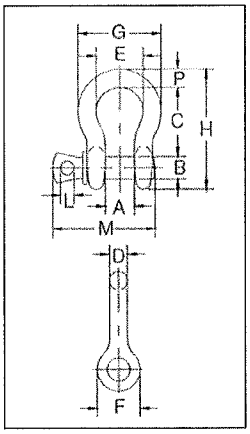

G-209A Crosby® Alloy Screw Pin Shackles

Nominal Size (in.)	Working Load Limit (t)*	G-209A Stock No.	Weight Each (lbs.)	Dimensions (in.) A	B	C	D	E	F	G	H	L	M	P	Tolerance +/- C	A
3/8	2	1017450	.31	.66	.44	1.44	.38	1.03	.91	1.78	2.49	.25	2.03	.38	.13	.06
7/16	2-2/3	1017472	.38	.75	.50	1.69	.44	1.16	1.06	2.03	2.91	.31	2.38	.44	.13	.06
1/2	3-1/3	1017494	.63	.81	.63	1.88	.50	1.31	1.19	2.31	3.28	.38	2.69	.50	.13	.06
5/8	5	1017516	1.38	1.06	.75	2.38	.63	1.69	1.50	2.94	4.19	.44	3.34	.69	.13	.06
3/4	7	1017538	2.35	1.25	.88	2.81	.75	2.00	1.81	3.50	4.97	.50	3.97	.81	.25	.06
7/8	9-1/2	1017560	3.61	1.44	1.00	3.31	.88	2.28	2.09	4.03	5.83	.50	4.50	.97	.25	.06
1	12-1/2	1017582	5.32	1.69	1.13	3.75	1.00	2.69	2.38	4.69	6.56	.56	5.07	1.06	.25	.06
1-1/8	15	1017604	7.25	1.81	1.25	4.25	1.16	2.91	2.69	5.16	7.47	.63	5.59	1.25	.25	.06
1-1/4	18	1017626	9.88	2.03	1.38	4.69	1.29	3.25	3.00	5.75	8.25	.69	6.16	1.38	.25	.06
1-3/8	21	1017648	13.25	2.25	1.50	5.25	1.42	3.63	3.31	6.38	9.16	.75	6.84	1.50	.25	.13

* Maximum Proof Load is 2 times the Working Load Limit (metric tons) and 2.2 times the Working Load Limit (short tons). Minimum Ultimate Strength is 4.5 times the Working Load Limit for metric tonnes, and 5 times the Working Load Limit for short tons. For Working Load Limit reduction due to side loading applications, see page 91.

Load Rated® QT QUENCHED & TEMPERED

APPLICATION INSTRUCTIONS
SEE PAGE 89 OF THE GENERAL CATALOG

G-2169

S-2169

- Capacities of 7, 12.5 and 18 metric tons.
- Quenched and Tempered for maximum strength.
- Forged Alloy Steel.
- Available in galvanized and self colored finished.
- Individually proof tested and magnetic particle inspected. Crosby certification available at time of order.
- Meets or exceeds all requirements of ASME B30.26 including identification, ductility, design factor, proof load and temperature requirements. Importantly, these shackles meet other critical performance requirements including fatigue life, impact properties and material traceability, not addressed by ASME B30.26.
- Look for the Red Pin® . . . the mark of genuine Crosby quality.

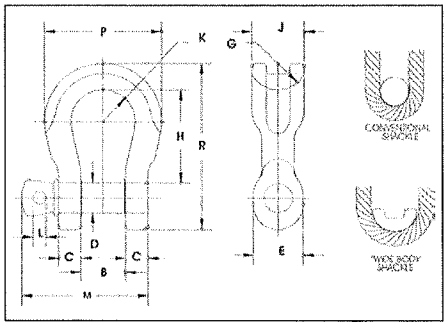

G-2169 / S-2169 Screw Pin "Wide Body" Shackles

Working Load Limit (t)*	G-2169 Stock No.	S-2169 Stock No.	Weight Each (lbs.)	B +/- .25	C	D +/- .02	E	G
7	1021655	1021664	3.5	1.25	.69	.88	1.82	1.25
12.5	1021673	1021682	8.8	1.69	.92	1.13	2.38	1.37
18	1021691	1021699	13	2.03	1.16	1.38	2.69	1.50

* Ultimate Load is 5 times the Working Load Limit. Forged Alloy Steel. Proof Load is 2 tin

Vermont Agency of Transportation
RECEIVED
Abutment_WingWall_RetainingWall Submittal 1 120814_Resubmit 12.22.14.pdf
CK'D BY CLB OK'D BY DRP
December 9, 2014
RESUBMIT NO Approved
BY C. CARLSON DATE 12/22/14

ALP LIFTING EYE - STANDARD

Designed as an attachment link for lifting and transport of precast concrete units in combination with the ALP Lifting Pin Anchor System. The Lifting Eye consists of a round body with a protruding lever arm and a high strength bail. The body has a "T" slot that engages the head of a Lifting Pin Anchor. The rotation capabilities allow the lifting eye to stay oriented in the direction of loading without binding up.

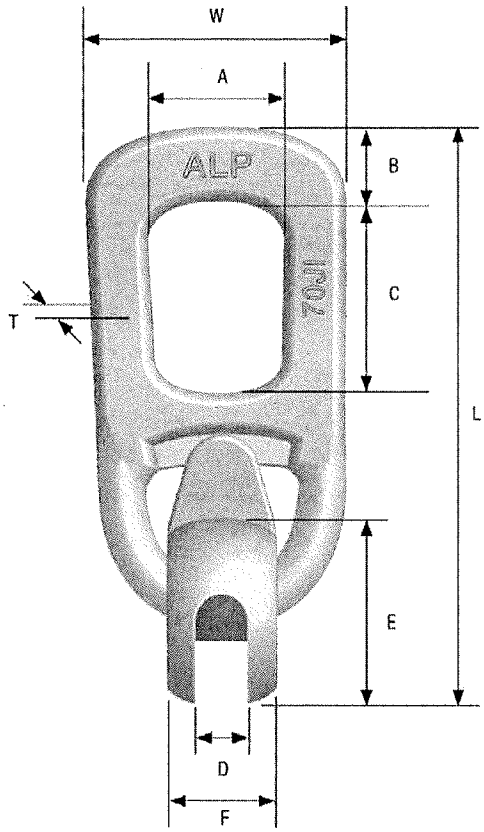

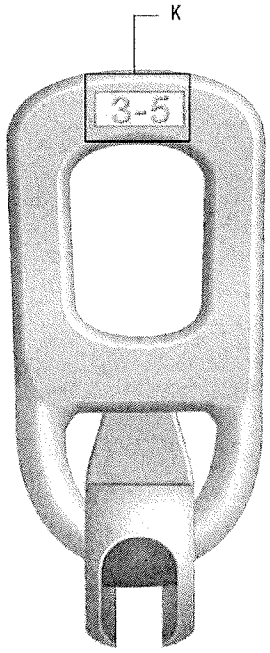

Part Number	Description / Capacity	Weight Each (lbs)	L	W	T	A	B	C	D	E	F	K Load Range (Tons)	Ultimate Capacity in Tension (lbs)
LPLE1T	Lifting Eye for 1T, 1.3T Anchors	2.20	7-11/32"	3"	1/2"	1-3/4"	7/8"	2-3/4"	15/32"	2-1/8"	1-5/16"	1-1.3	13,000
LPLE2T	Lifting Eye for 1.5T, 2T, 2.5T Anchors	3.60	9"	3-1/2"	5/8"	2-1/8"	1"	3-3/8"	11/16"	2-9/16"	1-5/8"	1.5-2.5	25,000
LPLE4T	Lifting Eye for 3T, 4T, 5T Anchors	7.65	11"	4-11/16"	11/16"	2-5/8"	1-15/32"	3-7/16"	29/32"	3-3/8"	2-1/4"	3-5	50,000
LPLE8T	Lifting Eye for 6T, 8T, 10T Anchors	21.70	15-1/2"	6-1/4"	1-1/16"	3-1/8"	2"	4-3/8"	1-1/4"	4-1/2"	2-15/16"	6-10	100,000
LPLE20T	Lifting Eye for 12T, 16T, 20T Anchors	39.00	20"	7-11/16"	1-3/8"	4-3/8"							

Rated load has a 5:1 safety factor.

Used with abutments and retainin

Vermont Agency of Transportation
RECEIVED
Abutment_WingWall_RetainingWall Submittal 1 120814_Resubmit 12.22.14.pdf

CK'D BY CLB OK'D BY DRP

December 9, 2014

RESUBMIT NO Approved

BY C. CARLSON DATE 12/22/14

APPENDIX B1

OXFORD Industrial Technologies, LLC

PO Box 736 • Stevenson, CT 06491
www.oxfordtechusa.com
Phone: (203) 268-6030
Fax: (203) 445-1240
info@oxfordtechusa.com

Oxford Lift System®

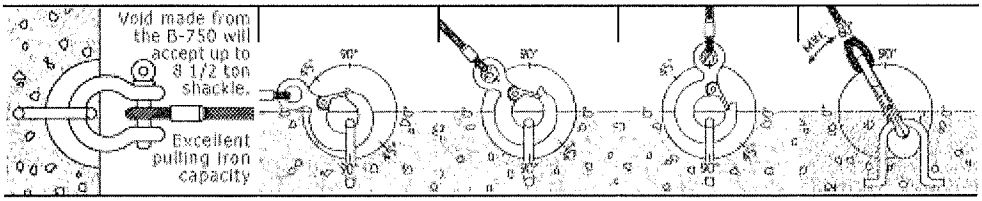

Anchor Product Code	Slab Min. Inches	Safe Working Load @ 90 degree Shear-0 degree Pull	Safe Working Load @ 90 degree Shear-45 degree Pull	Safe Working Load @ 90 degree Tension-90 degree Pull	Safe Working Load @ 90 degree Shear-60 degree Pull
A 500-3	4.00"	4,500	4,000	3,500	4,000
A 500-4	5.00"	8,000	5,500	4,000	5,000
A 500-5	6.00"	10,500	6,500	5,000	5,500
A 750-5	6.00"	12,500	8,000	7,000	7,000
A 750-7	8.00"	15,000	12,500	10,000	10,000

Note: Safe Working Load provides a factor of safety of approximately 4:1
Test Results are based on a minimum concrete compressive strength of 4,000 psi.

Used for the wing walls.

<back next>

Home | B-500 & B-750 | S-150 | S-300 | Lift Anchor & Order Form | Concrete Products
Pull Iron Capacity | Anchors & Accessories | Toggle-Lok | Insert/Lift Anchor | Grid-Lok/ Rebar Chair | Helpful Calculations

Vermont Agency of Transportation
RECEIVED
Abutment_WingWall_RetainingWall Submittal 1 120814_Resubmit 12.22.14.pdf

CK'D BY CLB OK'D BY DRP

December 9, 2014

RESUBMIT NO Approved
BY C. CARLSON DATE 12/22/14

ALP LIFTING PIN ANCHORS

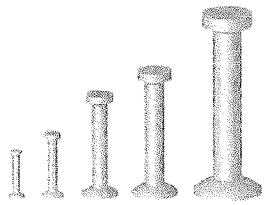

All ALP Lifting Pins are manufactured using high strength steel with hot forged ends. The head design provides uniform engagement with the Lifting Eye, and the large forged anchor "foot" is embedded in the concrete to create the lifting capacity. Safe Working Loads (SWL) displayed in the below chart apply to loading in any direction. These Lifting Pin Anchors are designed to meet the OSHA requirements of a 4 to 1 Safety Factor.

Standard Finish is Hot-Dipped Galvanized

				In Concrete Capacities 4:1 SWL									
Part Number	Ton	Length (in.)	Weight Per Piece (lbs)	Min. Slab Thickness (in.)	1500 PSI (lbs)	2000 PSI (lbs)	2500 PSI (lbs)	3000 PSI (lbs)	3500 PSI (lbs)	4000 PSI (lbs)	4500 PSI (lbs)	5000 PSI (lbs)	Min. Edge Distances (in.)
LPA1T258G	1T	2-5/8"	0.14	3-1/2"	1,415	1,630	1,825	2,000	2,000	2,000	2,000	2,000	6"
LPA1T338G	1T	3-3/8"	0.16	5"	1,820	2,000	2,000	2,000	2,000	2,000	2,000	2,000	7"
LPA1T434G	1T	4-3/4"	0.21	6"	2,000	2,000	2,000	2,000	2,000	2,000	2,000	2,000	8"
LPA2T234G	2T	2-3/4"	0.32	4"	1,375	1,585	1,775	1,940	2,100	2,245	2,380	2,510	6"
LPA2T338G	2T	3-3/8"	0.35	5"	2,710	3,130	3,500	3,830	4,000	4,000	4,000	4,000	7"
LPA2T434G	2T	4-3/4"	0.45	6"	3,500	4,000	4,000	4,000	4,000	4,000	4,000	4,000	10"
LPA2T512G	2T	5-1/2"	0.48	7"	4,000	4,000	4,000	4,000	4,000	4,000	4,000	4,000	12"
LPA2T634G	2T	6-3/4"	0.58	8"	4,000	4,000	4,000	4,000	4,000	4,000	4,000	4,000	12"
LPA2T11G	2T	11"	0.85	12-1/2"	4,000	4,000	4,000	4,000	4,000	4,000	4,000	4,000	18"
LPA4T3G	4T	3"	0.73	4"	1,950	2,250	2,515	2,755	2,975	3,180	3,375	3,555	6"
LPA4T312G	4T	3 1/2"	0.82	5"	2,815	3,255	3,640	3,985	4,305	4,600	4,880	5,145	10"
LPA4T334G	4T	3-3/4"	0.85	5"	3,250	3,755	4,200	4,600	4,965	5,310	5,635	5,940	10"
				8"	4,225	4,880	5,460	5,980	6,460	6,905	7,325	7,720	12"*
LPA4T414G	4T	4-1/4"	0.91	6"	3,845	4,445	4,965	5,440	5,880	6,285	6,665	7,025	10"
LPA4T434G	4T	4-3/4"	0.98	6"	4,445	5,130	5,740	6,285	6,790	7,260	7,700	8,000	10"
				10"	5,420	6,260	7,000	7,665	8,000	8,000	8,000	8,000	14"*
LPA4T512G	4T	5-1/2"	1.08	7"	4,840	5,590	6,250	6,850	7,400	7,910	8,000	8,000	12"
LPA4T718G	4T	7-1/8"	1.32	9"	6,710	8,000	8,000	8,000	8,000	8,000	8,000	8,000	13"
LPA4T912G	4T	9-1/2"	1.60	11"	8,000	8,000	8,000	8,000	8,000	8,000	8,000	8,000	16"
LPA8T434G	8T	4-3/4"	2.15	6-1/2"	4,185	4,835	5,405	5,925	6,400	6,840	7,255	7,645	10"
LPA8T634G	8T	6-3/4"	2.50	8"	7,025	8,110	9,070	9,935	10,730	11,475	12,170	12,825	14"
				14"	9,715	11,215	12,540	13,740	14,840	15,865	16,000	16,000	21"*
LPA8T[illegible]									16,000	16,000	16,000	16,000	18"
LPA8T1338G	8T	13-3/8	4.25	15	16,000	16,000	16,000	16,000	16,000	16,000	16,000	16,000	22"
LPA8T2634G	8T	26-3/4"	7.90	29"	16,000	16,000	16,000	16,000	16,000	16,000	16,000	16,000	36"
LPA20T10G	20T	10"	8.25	11-1/2"	11,960	13,810	15,440	16,915	18,270	19,530	20,715	21,835	20"
				20"	16,970	19,595	21,910	24,000	25,920	27,710	29,295	30,985	24"*
LPA20T1934G	20T	19-3/4"	13.50	22"	28,000	32,328	36,145	39,595	40,000	40,000	40,000	40,000	36"

Used for the abutments and the retaining wall footing.

Verify lifting device used. Lifting calculations show LPA20T1934G, but shop drawing sheets show LPA20T10G

- Shaded area indicates the capacity in concrete is limited by the mechanical capacity of the anchor

- The Safety Factor for the listed loads is approximately 4 to 1 in normal weight concrete (145-150PCF)
- Loads are based on normal anchor recess dimensions: 1T: 5/16"; 2T: 7/16"; 8T, 10T, 16T and 20T: 9/16"
- Loads are listed at varying concrete strengths (PSI) to accommodate varying conditions at time of loading
- *Concrete thickness exceeding the listed minimums may increase the listed capacity. Example: the 20Tx10" has two capacities listed, one for the 11-1/2" minimum slab and one for the 20"

[illegible] x 3-3/4", 4T x 4-3/4", 8/10T x 6-3/4" and the 20Tx10" anchors. Contact ALP customer service for further assistance.
used to determine actual applied loads

Vermont Agency of Transportation
RECEIVED
Abutment_WingWall_RetainingWall Submittal 1 120814_Resubmit 12.22.14.pdf
CK'D BY CLB OK'D BY DRP
December 9, 2014
RESUBMIT YES --------
BY C. CARLSON DATE 12/22/14

APPENDIX B3

Eric Barendse

From: Skip Francies <SkipFrancies@alpatterson.com>
Sent: Monday, December 01, 2014 3:09 PM
To: Eric Barendse
Cc: John Ems
Subject: Go!

I have established the minimum capacity with the anchor 6" in and 24" from the end.
The capacity is 17,300# verse your 16,750# at 4500psi. You have 5000psi.
Be sure the anchors are placed inside of the perimeter reinforcement.

Yes, we have nmb Splice Sleeves.
Best Regards,

Skip Francies, FPCI
A.L. Patterson Inc.
President Precast Supply Division
T: 215-310-2128
C: 813-230-8266
F: 215-310-2129
E: skipf@alpatterson.com

Verification that the 20T lift can be placed at 6" from the toe edge of the retaining wall.

Your Single Source Supplier!

Vermont Agency of Transportation
RECEIVED
Abutment_WingWall_RetainingWall Submittal 1 120814_Resubmit 12.22.14.pdf
CK'D BY CLB OK'D BY DRP
December 9, 2014
1 RESUBMIT NO Approved
BY C. CARLSON DATE 12/22/14