S.D. Ireland Companies
Precast Division

193 Industrial Ave. Williston, VT 05495
P.O. Box 2286 South Burlington, VT 05407
p: 802-863-6222 f: 802-860-1528
www.sdireland.com

Attention:	Brian Richardson	Date:	12/18/2014
Company:	C.C.S. Constructors	Job Name:	Stowe BRF 0235(11)
Address:	138 Munson Ave	Job Number:	#15163
City, St, Zip:	Morrisville, VT 05661	Regarding:	Drainage Strucutre Submittal #1
Ph: / Fax:	802-888-7701		

WE ARE SENDING:

- [ ] Quote
- [x] Details
- [ ] Other: _____
- [x] Submittals
- [ ] Prints
- [ ] Plans
- [ ] Specifications
- [ ] Copy Of Letter
- [ ] Change Order
- [ ] Samples
- [ ] Revised Submittals

Copies	Date	Pages	Description
1	12/18/2014	1	Transmittal Cover Page
1		8	Catch Basin and Drain Manhole Take-offs
1		5	Cast-Iron Frame and Grate/Lid detials
1		1	S.D.I. Typical 48" I.D. Manhole detail
1		4	Kor-N-Seal Booted Connection details
1		2	Butyl Mastic detail

These Are Submitted as Checked Below:

- [x] For Approval
- [ ] Approved as Submitted
- [ ] Resubmit __ Copies for Approval
- [x] For Your Use
- [ ] Approved as Noted
- [ ] Submit__ Copies for Distribution
- [ ] As Requested
- [ ] Returned for Corrections
- [ ] Return __ Corrected Prints
- [ ] For Review and Comment
- [ ] Prints Returned After Loan to Us
- [ ] For Bids Due: _____
- [ ] Other:

Notes/Remarks:

Brian,

Please pass on to the state for approvals.

Let me know if you have any questions.

Thank you.

Eric Barendse x265

Copy To: _____

Signed: Eric Barendse

If enclosures are not as noted, kindly notify us at once.

S.D. IRELAND CONCRETE CONST CORP **Up to Bottom**

Job: **15163** Customer: **CCS CONSTRUCTORS** Structure Code: **CB #1** Type: **Catch Basin**

Job Name: **Stowe BRF 0235 (11)** Station: Description: **48" I.D. Catch Basin**

Structure Product Detail

Item	Product	Qty	Product Description	Yards	Weight
Rim	n3405300	1	R-3405-A CHECKER BOARD GRATE TYPE D	0.00	210
Top 3	0548502	1	COVER,58" DIA W/24" SQ OPENING x 12" HIGH	0.43	1.700
Top 1	n3589000	1	R-3589 24" SQ 3 FLANGE FRAME, 8" HIGH or 3589-2004	0.00	250
Base	0548040	1	48" I.D. X 4' MONO SPECIAL	1.23	4.919
Misc 1	1403100	1	MASTIC,CON-SEAL, 1" X 14 1/2' (8 ROLLS/BOX) CS-102	0.00	1
	1204218	2	ADAPTOR,NPC-CGA18	0.00	1
Acces	20624L	2	BOOT,KOR-N-SEAL 24L-(4-180 BANDS)	0.00	28
	121I180	8	BAND,KOR-N-SEAL 1-180	0.00	1
			Structure Totals	1.66	7,110

Inside Area View

Rim to Invert	5.10 '	Precast Height	5.67 '	Wall	5.00 "
Less Casting	5.10 '	Floor	8.00 "	Sump	1.50 '
Invert to Floor	1.50 '	Plus Floor	6.34 '		
Adjustment (Brick/Mort.)	0.93				

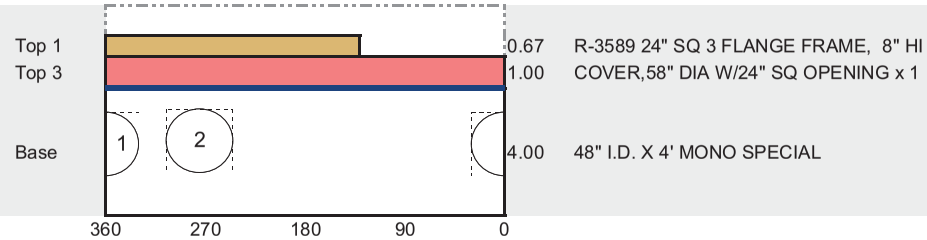

Elevations

	Elev	Angle	Pipe	Hole Type	Hole" Height	Hole" Width	Up"	Item
Rim	710.23							
(1)	705.13	0	18 HDPE	20624L	24	24	15	Base
(2)	705.23	275	18 HDPE	20624L	24	24	16	Base
(3)		0			0	0	0	
(4)		0			0	0	0	
(5)		0			0	0	0	
(6)		0			0	0	0	
(7)		0			0	0	0	
(8)		0			0	0	0	

Description: **48" I.D. X 4' MONO SPECIAL**

Product ID: **0548040S**

Item: **Base** Step Location: **90**

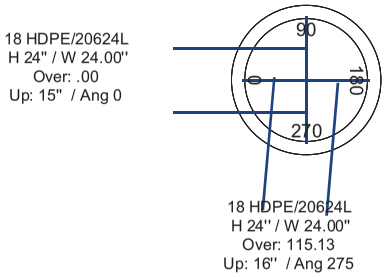

S.D. IRELAND CONCRETE CONST CORP **Up to Bottom**

Job: **15163** Customer: **CCS CONSTRUCTORS** Structure Code: **CB #2** Type: **Catch Basin**

Job Name: **Stowe BRF 0235 (11)** Station: Description: **48" I.D. Catch Basin**

Structure Product Detail

Item	Product	Qty	Product Description	Yards	Weight
Rim	n3405300	1	R-3405-A CHECKER BOARD GRATE TYPE D	0.00	210
Top 3	0548502	1	COVER,58" DIA W/24" SQ OPENING x 12" HIGH	0.43	1.700
Top 1	n3589000	1	R-3589 24" SQ 3 FLANGE FRAME, 8" HIGH or 3589-2004	0.00	250
Base	0548040	1	48" I.D. X 4' MONO SPECIAL	1.28	5.113
Misc 1	1403100	1	MASTIC,CON-SEAL, 1" X 14 1/2' (8 ROLLS/BOX) CS-102	0.00	1
	1204218	1	ADAPTOR,NPC-CGA18	0.00	1
Acces	20624L	1	BOOT,KOR-N-SEAL 24L-(4-180 BANDS)	0.00	14
	121I180	4	BAND,KOR-N-SEAL 1-180	0.00	0
			Structure Totals	1.71	7,289

Inside Area View

Rim to Invert	4.67 '	Precast Height	5.67 '	Wall	5.00 "
Less Casting	4.67 '	Floor	8.00 "	Sump	1.50 '
Invert to Floor	1.50 '	Plus Floor	6.34 '		
Adjustment (Brick/Mort.)	0.50				

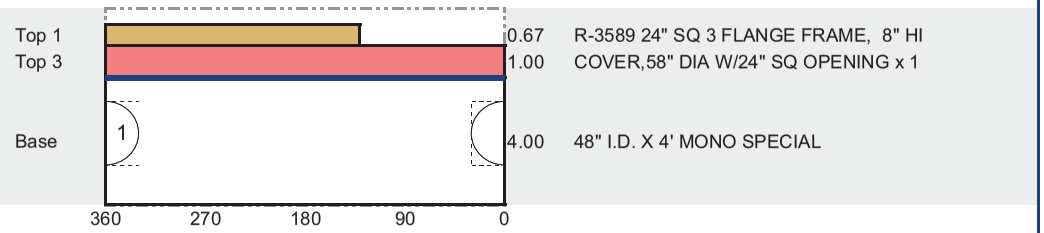

Elevations

	Elev	Angle	Pipe	Hole Type	Hole" Height	Hole" Width	Up"	Item
Rim	711.4							
(1)	706.73	0	18 HDPE	20624L	24	24	15	Base
(2)		0			0	0	0	
(3)		0			0	0	0	
(4)		0			0	0	0	
(5)		0			0	0	0	
(6)		0			0	0	0	
(7)		0			0	0	0	
(8)		0			0	0	0	

Description: **48" I.D. X 4' MONO SPECIAL**
Product ID: **0548040S**
Item: **Base** Step Location: **90**

18 HDPE/20624L
H 24" / W 24.00"
Over: .00
Up: 15" / Ang 0

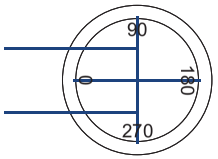

S.D. IRELAND CONCRETE CONST CORP **Up to Bottom**

Job: **15163** Customer: **CCS CONSTRUCTORS** Structure Code: **CB #3** Type: **Catch Basin**

Job Name: **Stowe BRF 0235 (11)** Station: Description: **48" I.D. Catch Basin**

Structure Product Detail

Item	Product	Qty	Product Description	Yards	Weight
Rim	n3405300	1	R-3405-A CHECKER BOARD GRATE TYPE D	0.00	210
Top 1	n3589000	1	R-3589 24" SQ 3 FLANGE FRAME, 8" HIGH or 3589-2004	0.00	250
Top 3	0548502	1	COVER,58" DIA W/24" SQ OPENING x 12" HIGH	0.43	1.700
Base	0548060	1	48" I.D. X 6' MONO SPECIAL	1.61	6.459
Misc 1	1403100	1	MASTIC,CON-SEAL, 1" X 14 1/2' (8 ROLLS/BOX) CS-102	0.00	1
	1204218	3	ADAPTOR,NPC-CGA18	0.00	2
Acces	20624L	3	BOOT,KOR-N-SEAL 24L-(4-180 BANDS)	0.00	42
	121I180	12	BAND,KOR-N-SEAL 1-180	0.00	1
			Structure Totals	2.04	8,665

Inside Area View

Rim to Invert	6.78 '	Precast Height	7.67 '	Wall	5.00 "
Less Casting	6.78 '	Floor	8.00 "	Sump	1.50 '
Invert to Floor	1.50 '	Plus Floor	8.34 '		
Adjustment (Brick/Mort.)	0.61				

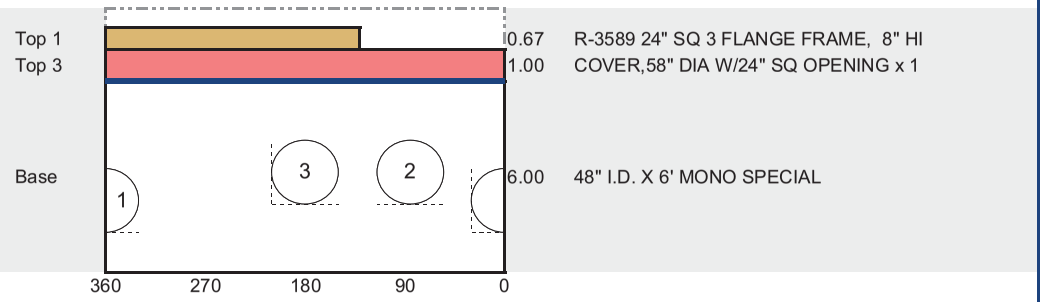

Elevations

	Elev	Angle	Pipe	Hole Type	Hole" Height	Hole" Width	Up"	Item
Rim	710.78							
(1)	704	0	18 HDPE	20624L	24	24	15	Base
(2)	704.89	85	18 HDPE	20624L	24	24	26	Base
(3)	704.89	180	18 HDPE	20624L	24	24	26	Base
(4)		0			0	0	0	
(5)		0			0	0	0	
(6)		0			0	0	0	
(7)		0			0	0	0	
(8)		0			0	0	0	

Description: **48" I.D. X 6' MONO SPECIAL**

Product ID: **0548060S**

Item: **Base** Step Location: **90**

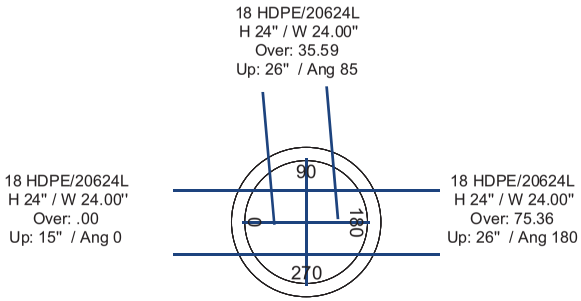

S.D. IRELAND CONCRETE CONST CORP **Up to Bottom**

Job: **15163** Customer: **CCS CONSTRUCTORS** Structure Code: **CB #8** Type: **Catch Basin**

Job Name: **Stowe BRF 0235 (11)** Station: Description: **48" I.D. Catch Basin**

Structure Product Detail

Item	Product	Qty	Product Description	Yards	Weight
Top 1	n3405300	1	R-3405-A CHECKER BOARD GRATE TYPE D	0.00	210
Top 3	0548502	1	COVER,58" DIA W/24" SQ OPENING x 12" HIGH	0.43	1.700
Top 2	n3589000	1	R-3589 24" SQ 3 FLANGE FRAME, 8" HIGH or 3589-2004	0.00	250
Base	0548040	1	48" I.D. X 4' MONO SPECIAL	1.28	5.113
Misc 1	1403100	1	MASTIC,CON-SEAL, 1" X 14 1/2' (8 ROLLS/BOX) CS-102	0.00	1
	1204218	1	ADAPTOR,NPC-CGA18	0.00	1
Acces	20624L	1	BOOT,KOR-N-SEAL 24L-(4-180 BANDS)	0.00	14
	121I180	4	BAND,KOR-N-SEAL 1-180	0.00	0
			Structure Totals	1.71	7,289

Inside Area View

Rim to Invert	4.21 '	Precast Height	5.67 '	Wall	5.00 "
Less Casting	4.21 '	Floor	8.00 "	Sump	1.67 '
Invert to Floor	1.67 '	Plus Floor	6.34 '		
Adjustment (Brick/Mort.)	0.21				

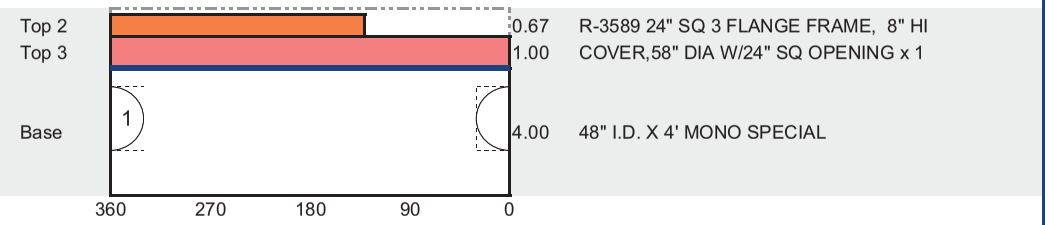

Elevations

	Elev	Angle	Pipe	Hole Type	Hole" Height	Hole" Width	Up"	Item
Rim	709.88							
(1)	705.67	0	18 HDPE	20624L	24	24	17	Base
(2)		0			0	0	0	
(3)		0			0	0	0	
(4)		0			0	0	0	
(5)		0			0	0	0	
(6)		0			0	0	0	
(7)		0			0	0	0	
(8)		0			0	0	0	

Description: **48" I.D. X 4' MONO SPECIAL**

Product ID: **0548040S**

Item: **Base** Step Location: **90**

18 HDPE/20624L
H 24" / W 24.00"
Over: .00
Up: 17" / Ang 0

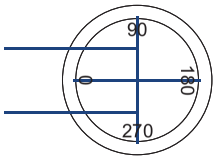

S.D. IRELAND CONCRETE CONST CORP **Up to Bottom**

Job: **15163** Customer: **CCS CONSTRUCTORS** Structure Code: **CB #4** Type: **Catch Basin**

Job Name: **Stowe BRF 0235 (11)** Station: Description: **48" I.D. Catch Basin**

Structure Product Detail

Item	Product	Qty	Product Description	Yards	Weight
Top 1	n3589000	1	R-3292 24"x36" Curb Box with Grate	0.00	250
Top 3	0548504	1	COVER,58" SPECIAL with 24"x34" opening	0.43	1,700
Base	0548040	1	48" I.D. X 4' MONO SPECIAL	1.28	5.113
Misc 1	1403100	1	MASTIC,CON-SEAL, 1" X 14 1/2' (8 ROLLS/BOX) CS-102	0.00	1
	1204218	1	ADAPTOR,NPC-CGA18	0.00	1
Acces	20624L	1	BOOT,KOR-N-SEAL 24L-(4-180 BANDS)	0.00	14
	121I180	4	BAND,KOR-N-SEAL 1-180	0.00	0
			Structure Totals	1.71	7,079

Inside Area View

Rim to Invert	4.68 '	Precast Height	5.67 '	Wall	5.00 "
Less Casting	4.68 '	Floor	8.00 "	Sump	1.50 '
Invert to Floor	1.50 '	Plus Floor	6.34 '		
Adjustment (Brick/Mort.)	0.51				

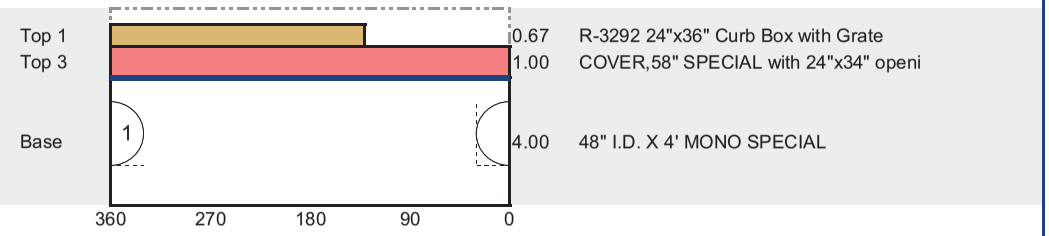

Elevations

	Elev	Angle	Pipe	Hole Type	Hole" Height	Hole" Width	Up"	Item
Rim	716.98							
(1)	712.3	0	18 HDPE	20624L	24	24	15	Base
(2)		0			0	0	0	
(3)		0			0	0	0	
(4)		0			0	0	0	
(5)		0			0	0	0	
(6)		0			0	0	0	
(7)		0			0	0	0	
(8)		0			0	0	0	

Special Neenah R-3292 combination curb inlet with grate will be provided for this casting.

Description: **48" I.D. X 4' MONO SPECIAL**
Product ID: **0548040S**
Item: **Base** Step Location: **90**

18 HDPE/20624L
H 24" / W 24.00"
Over: .00
Up: 15" / Ang 0

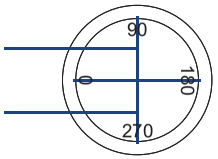

S.D. IRELAND CONCRETE CONST CORP **Up to Bottom**

Job: **15163** Customer: **CCS CONSTRUCTORS** Structure Code: **CB #5** Type: **Catch Basin**

Job Name: **Stowe BRF 0235 (11)** Station: Description: **48" I.D. Catch Basin**

Structure Product Detail

Item	Product	Qty	Product Description	Yards	Weight
Rim	n3405300	1	R-3405-A CHECKER BOARD GRATE TYPE D	0.00	210
Top 1	n3589000	1	R-3589 24" SQ 3 FLANGE FRAME, 8" HIGH or 3589-2004	0.00	250
Top 3	0548502	1	COVER,58" DIA W/24" SQ OPENING x 12" HIGH	0.43	1.700
Base	0548050	1	48" I.D. X 5' MONO SPECIAL	1.45	5.786
Misc 1	1403100	1	MASTIC,CON-SEAL, 1" X 14 1/2' (8 ROLLS/BOX) CS-102	0.00	1
	1204218	2	ADAPTOR,NPC-CGA18	0.00	1
Acces	20624L	2	BOOT,KOR-N-SEAL 24L-(4-180 BANDS)	0.00	28
	121I180	8	BAND,KOR-N-SEAL 1-180	0.00	1
			Structure Totals	1.88	7,977

Inside Area View

Rim to Invert	5.19 '	Precast Height	6.67 '	Wall	5.00 "
Less Casting	5.19 '	Floor	8.00 "	Sump	1.67 '
Invert to Floor	1.67 '	Plus Floor	7.34 '		
Adjustment (Brick/Mort.)	0.19				

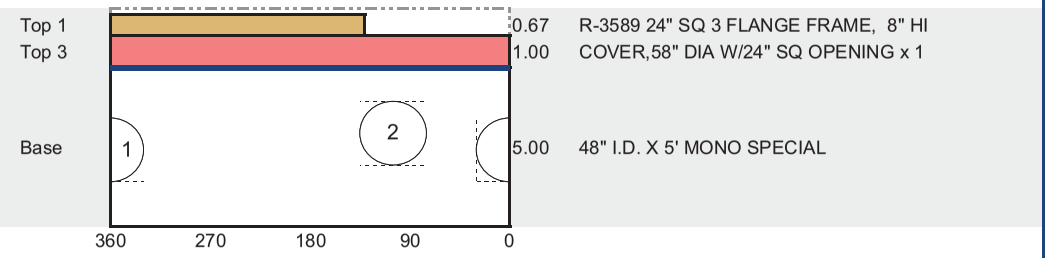

Elevations

	Elev	Angle	Pipe	Hole Type	Hole" Height	Hole" Width	Up"	Item
Rim	716.69							
(1)	711.5	0	18 HDPE	20624L	24	24	17	Base
(2)	712.02	105	18 HDPE	20624L	24	24	23	Base
(3)		0			0	0	0	
(4)		0			0	0	0	
(5)		0			0	0	0	
(6)		0			0	0	0	
(7)		0			0	0	0	
(8)		0			0	0	0	

Description: **48" I.D. X 5' MONO SPECIAL**
Product ID: **0548050S**
Item: **Base** Step Location: **90**

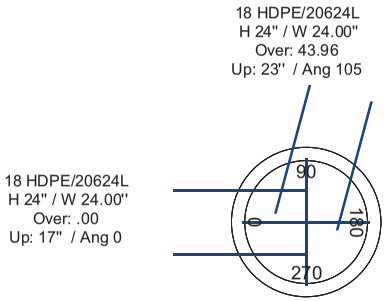

S.D. IRELAND CONCRETE CONST CORP **Up to Bottom**

Job: **15163** Customer: **CCS CONSTRUCTORS** Structure Code: **CB #6** Type: **Catch Basin**

Job Name: **Stowe BRF 0235 (11)** Station: Description: **48" I.D. Catch Basin**

Structure Product Detail

Item	Product	Qty	Product Description	Yards	Weight
Rim	n3405300	1	R-3405-A CHECKER BOARD GRATE TYPE D	0.00	210
Top 1	n3589000	1	R-3589 24" SQ 3 FLANGE FRAME, 8" HIGH or 3589-2004	0.00	250
Top 3	0548502	1	COVER,58" DIA W/24" SQ OPENING x 12" HIGH	0.43	1.700
Base	0548050	1	48" I.D. X 5' MONO SPECIAL	1.45	5.786
Misc 1	1403100	1	MASTIC,CON-SEAL, 1" X 14 1/2' (8 ROLLS/BOX) CS-102	0.00	1
	1204218	2	ADAPTOR,NPC-CGA18	0.00	1
Acces	20624L	2	BOOT,KOR-N-SEAL 24L-(4-180 BANDS)	0.00	28
	121I180	8	BAND,KOR-N-SEAL 1-180	0.00	1
			Structure Totals	1.88	7,977

Inside Area View

Rim to Invert	5.44 '	Precast Height	6.67 '	Wall	5.00 "
Less Casting	5.44 '	Floor	8.00 "	Sump	1.60 '
Invert to Floor	1.60 '	Plus Floor	7.34 '		
Adjustment (Brick/Mort.)	0.37				

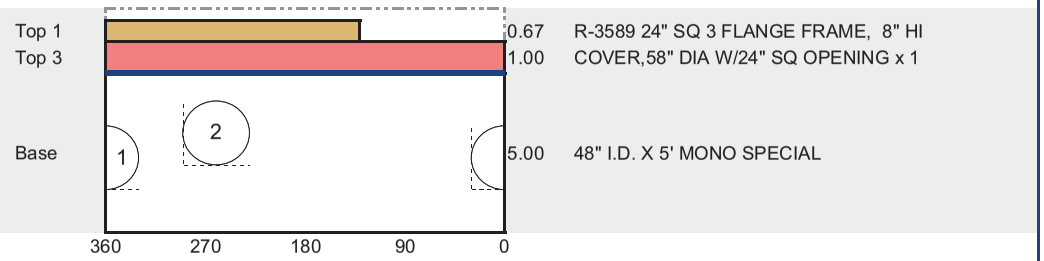

Elevations

	Elev	Angle	Pipe	Hole Type	Hole" Height	Hole" Width	Up"	Item
Rim	715.13							
(1)	709.69	0	18 HDPE	20624L	24	24	16	Base
(2)	710.47	260	18 HDPE	20624L	24	24	26	Base
(3)		0			0	0	0	
(4)		0			0	0	0	
(5)		0			0	0	0	
(6)		0			0	0	0	
(7)		0			0	0	0	
(8)		0			0	0	0	

Description: **48" I.D. X 5' MONO SPECIAL**

Product ID: **0548050S**

Item: **Base** Step Location: **90**

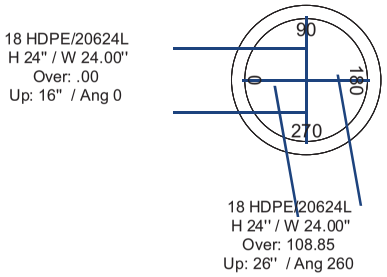

S.D. IRELAND CONCRETE CONST CORP **Up to Bottom**

Job: **15163** Customer: **CCS CONSTRUCTORS** Structure Code: **MH #7** Type: **Storm**

Job Name: **Stowe BRF 0235 (11)** Station: Description: **48" I.D. Storm Manhole**

Structure Product Detail

Item	Product	Qty	Product Description	Yards	Weight
Rim	N164255	1	R-1642 LID W/GASKET 26" DRAIN	0.00	120
Top 3	0548503	1	COVER,58" DIA W/24" RD OPENING X 12" HIGH	0.43	1,700
Top 1	N164220	1	R-1642 HD 26" RD. FRAME 7" HIGH	0.00	147
Base	0548050	1	48" I.D. X 5' MONO SPECIAL	1.45	5,786
Misc 1	1403100	1	MASTIC,CON-SEAL, 1" X 14 1/2' (8 ROLLS/BOX) CS-102	0.00	1
	1204218	2	ADAPTOR,NPC-CGA18	0.00	1
Acces	20624L	2	BOOT,KOR-N-SEAL 24L-(4-180 BANDS)	0.00	28
	121I180	8	BAND,KOR-N-SEAL 1-180	0.00	1
			Structure Totals	1.88	7,784

Inside Area View

Rim to Invert	5.93 '	Precast Height	6.58 '	Wall	5.00 "
Less Casting	5.93 '	Floor	8.00 "	Sump	1.50 '
Invert to Floor	1.50 '	Plus Floor	7.25 '		
Adjustment (Brick/Mort.)	0.85				

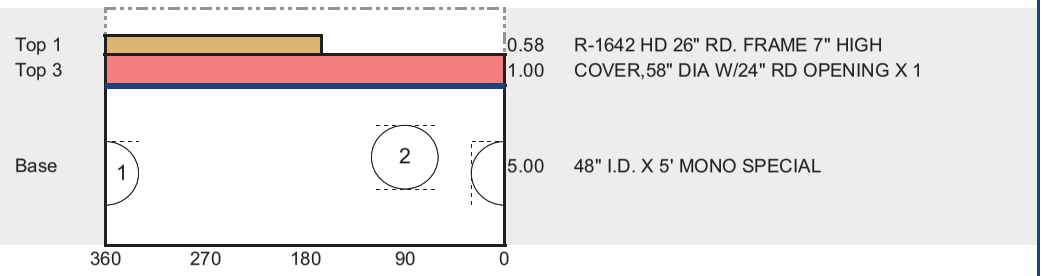

Elevations

	Elev	Angle	Pipe	Hole Type	Hole" Height	Hole" Width	Up"	Item
Rim	715							
(1)	709.07	0	18 HDPE	20624L	24	24	15	Base
(2)	709.58	90	18 HDPE	20624L	24	24	21	Base
(3)		0			0	0	0	
(4)		0			0	0	0	
(5)		0			0	0	0	
(6)		0			0	0	0	
(7)		0			0	0	0	
(8)		0			0	0	0	

Description: **48" I.D. X 5' MONO SPECIAL**
Product ID: **0548050S**
Item: **Base** Step Location: **90**

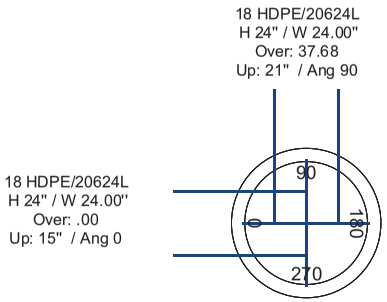

For use on CB #4 only.

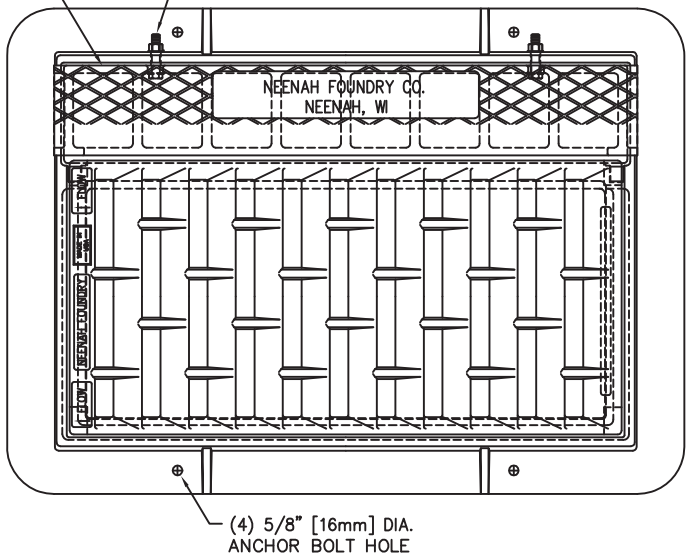

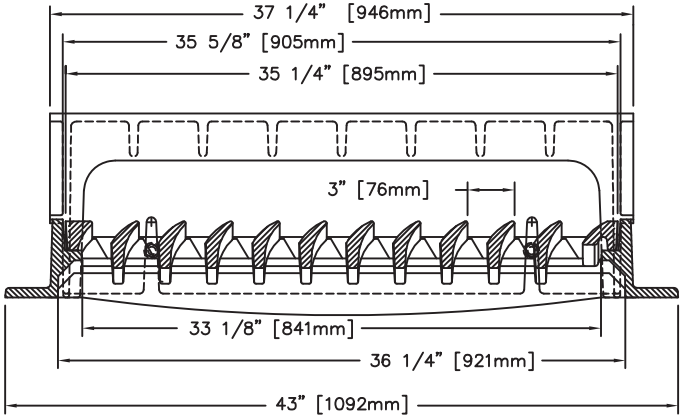

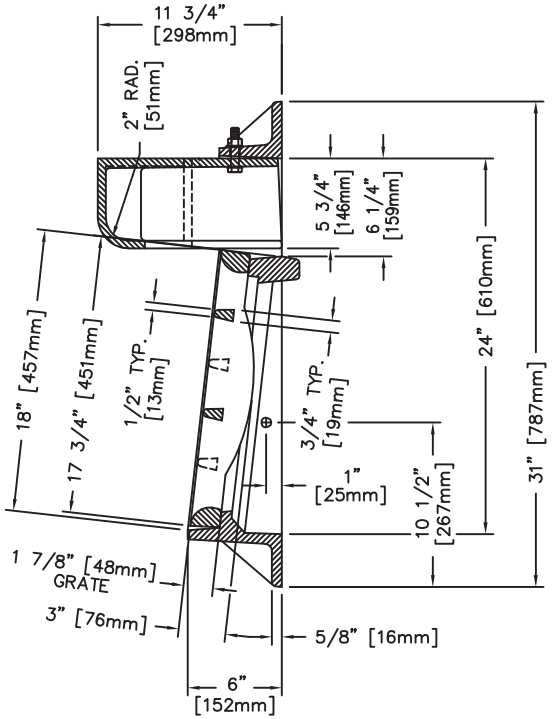

NOTE: ALL DIMENSIONS SHOWN ARE IN ENGLISH AND [METRIC].
COMPONENT NOS.: FRAME 3295–2004, GRATE 3067–3000, CURB BOX 3295–7002
FREE OPEN AREA: 2.1 SQ. FT.
WEIR PERIMETER: 5.9 FT.
MATERIAL: CAST GRAY IRON ASTM A–48, CLASS 35B.
FINISH: NO PAINT.
WEIGHT: FRAME 234#, GRATE 131#, CURB BOX 123#.

3	12–5–2000	REVISED CURB BOX PER COMP DWG	LMA
1	7–25–2000	REMOVED MATERIAL FROM SIDE OF GRATE	LMA
2	DATE	REVISION	INT

DR.	CSK	SCALE 1/8"=1"	TITLE: R–3295 FRAME, GRATE AND CURB BOX
CH.		DIM CHK.	NEENAH FOUNDRY COMPANY NEENAH WISCONSIN 54956
APP.			NF-3295 100 B
DATE	5–05–99		

CAD DWG. REF: 3295 100.DWG–3

For all other Catch Basins.

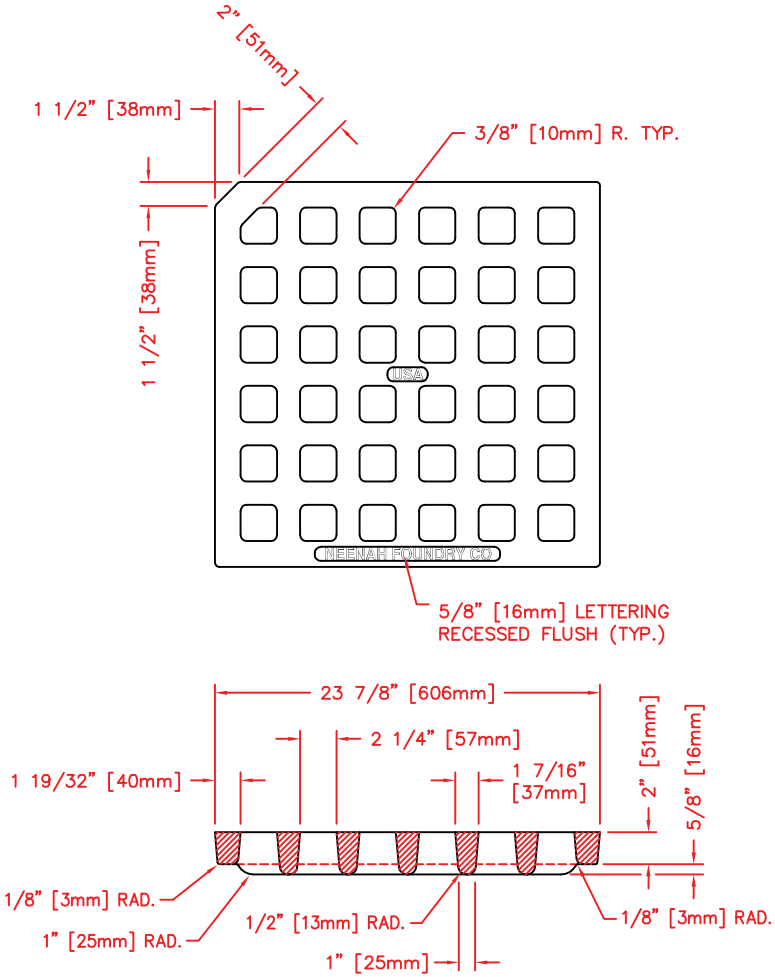

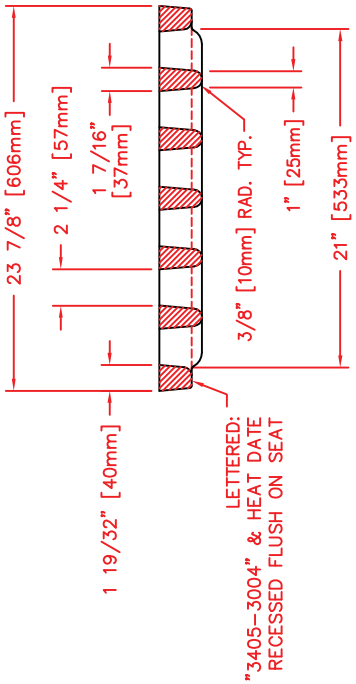

NOTE: ALL DIMENSIONS SHOWN ARE IN ENGLISH AND [METRIC].

MATERIAL: CAST GRAY IRON ASTM A-48, CLASS 35B

FREE OPEN AREA: 1.2 SQ. FT.

FINISH: NO PAINT

WEIGHT: APPROX. 201#

1	12-10-99	ADDED LETTERING	KMH
	DATE	REVISION	INT

DR. E. REMME

CH.

APP.

DATE 11-29-99

SCALE 1/8"=1"

DIM CHK.

TITLE: R-3405-A TYPE "A" GRATE

NEENAH FOUNDRY COMPANY
NEENAH WISCONSIN 54956

NF- 34053004 B

CAD DWG. REF: 34053004.DWG- 2

For all other Catch Basins. 4-Flange available if needed.

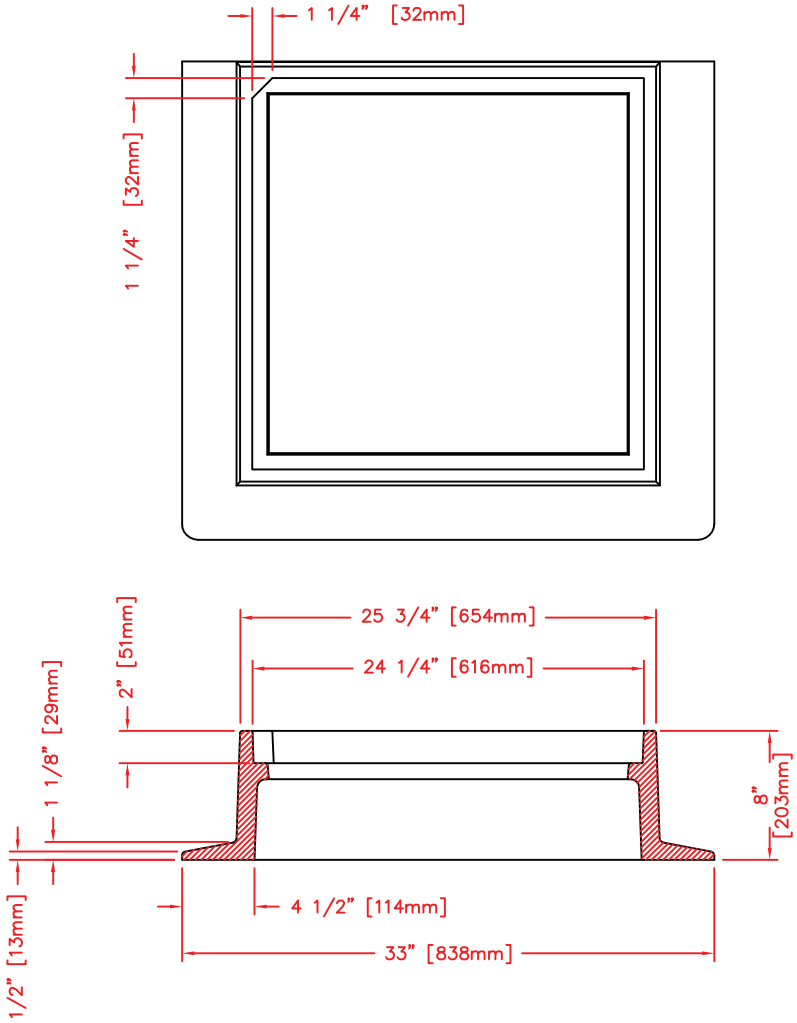

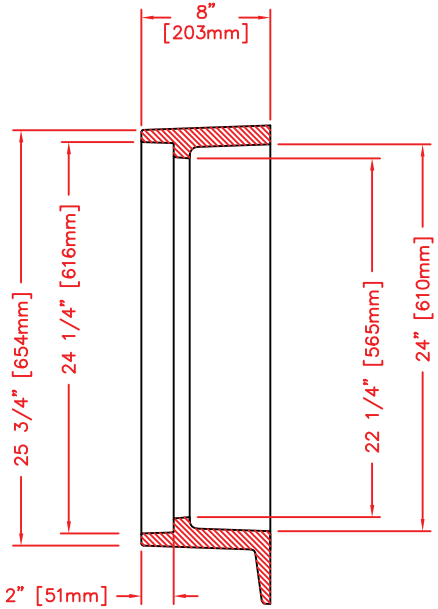

NOTE: ALL DIMENSIONS ARE SHOWN IN ENGLISH AND [METRIC].
FRAME SHALL NOT HAVE ANY MANUFACTURER IDENTIFICATION MARKS.
MATERIAL: CAST GRAY IRON ASTM A-48, CLASS 35B
FINISH: NOT PAINTED
WEIGHT: 250#

WAS NF-13745-A

DR. KMH	SCALE 1/8"=1"	TITLE: R-3589 FRAME	
CH.			
APP.	DIM CHK.	NEENAH FOUNDRY COMPANY NEENAH WISCONSIN 54956	NF-35890001 B
DATE 05-13-99			

CAD DWG. REF: 35890001.DWG- 1

For use on MH #7 only.

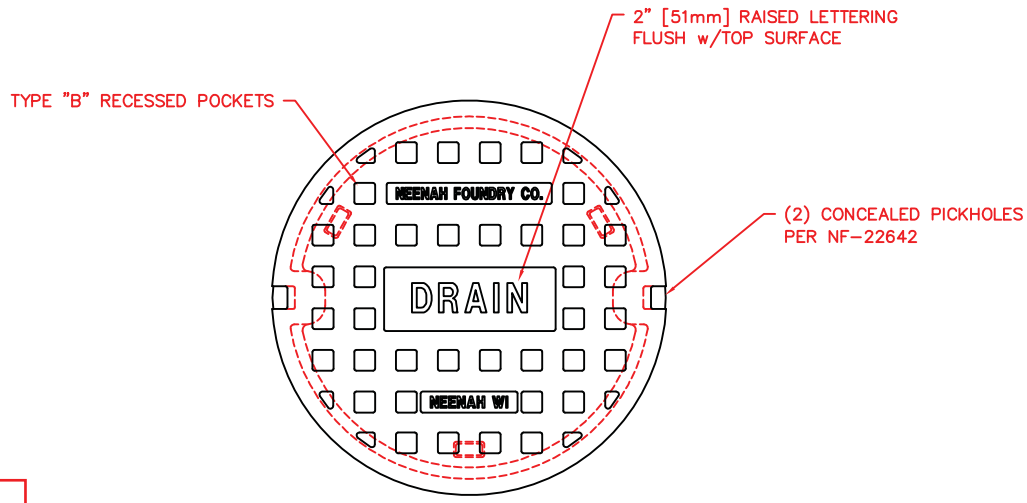

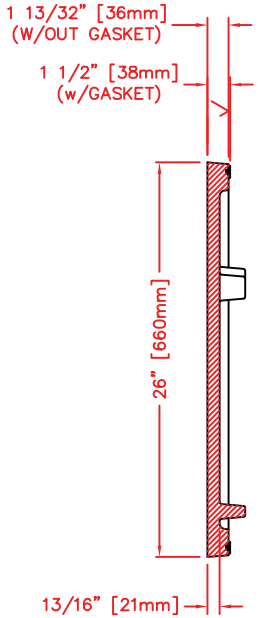

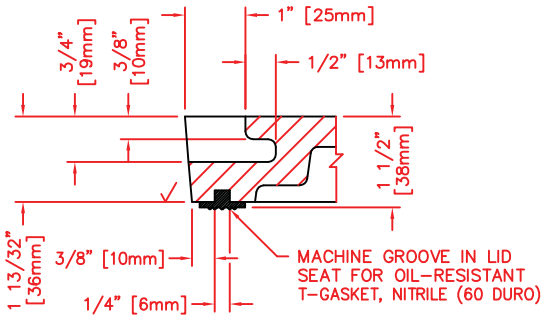

SELF-SEAL/CONCEALED PICK DETAIL
HALF SCALE

NOTE: ALL DIMENSIONS SHOWN ARE IN ENGLISH AND [METRIC]
MATERIAL: CAST GRAY IRON ASTM A-48, CLASS 35B
FINISH: NO PAINT
WEIGHT: 122#

DR. K HOGE	SCALE 1/8"=1"	TITLE: R-1642 PLATEN LID LETTERED "DRAIN"	
CH.			
APP.	DIM CHK.	NEENAH FOUNDRY COMPANY NEENAH WISCONSIN 54956	NF-16425549 B
DATE 04-08-2008			

CAD DWG. REF: 16425549.DWG- 1

For use on MH #7 only.

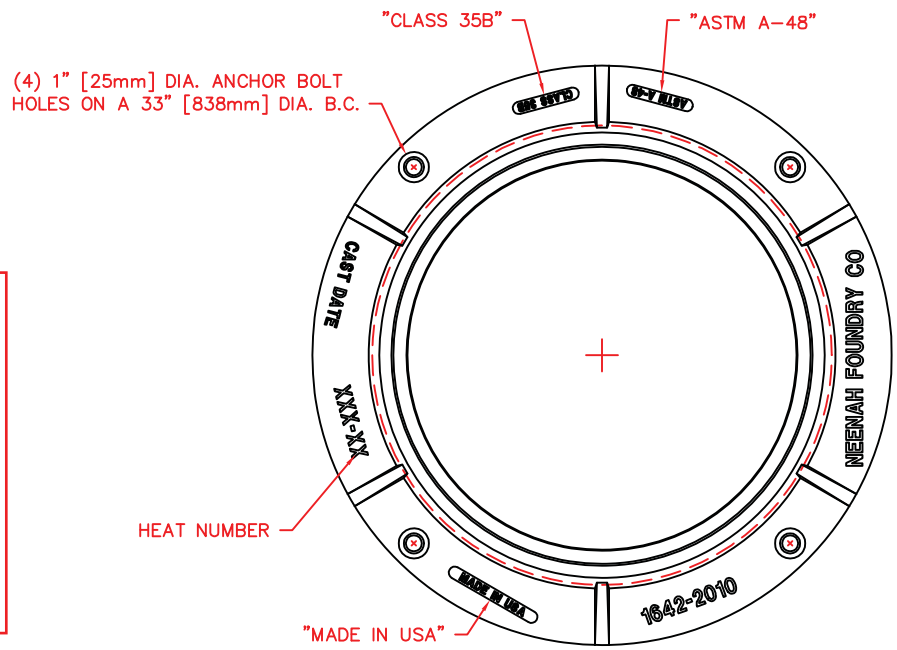

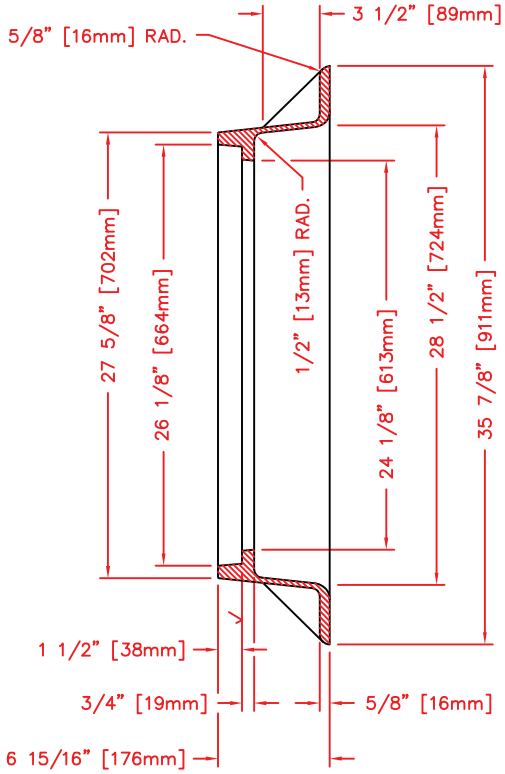

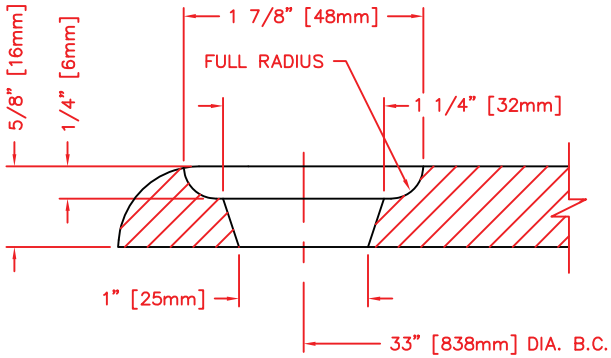

ANCHOR HOLE DETAIL
FULL SCALE

NOTE: ALL DIMENSIONS ARE SHOWN IN ENGLISH AND [METRIC].
SUITABLE FOR HS-25 LOADING
MATERIAL: CAST GRAY IRON ASTM A-48, CLASS 35B
FINISH: NOT PAINTED
WEIGHT: 147#

WAS COMPONENT NO. 1642-0001

3	10-14-2003	CORRECTED FILLETS	KMH
2	06-09-2003	ADDED LETTERING ON FLANGE	ELR
1	10-30-96	CHG. A-A DIM. FROM 26 3/8"	CSK
	DATE	REVISION	INT

DR.	E. REMME	SCALE 1/8"=1"	TITLE: R-1642 FRAME
CH.			
APP.		DIM CHK.	NEENAH FOUNDRY COMPANY NEENAH WISCONSIN 54956
DATE	2-10-96		NF-16422010 B

CAD DWG. REF: 16422010.DWG- 4

48" Diameter Structure

94 Gallons Per Vertical Foot

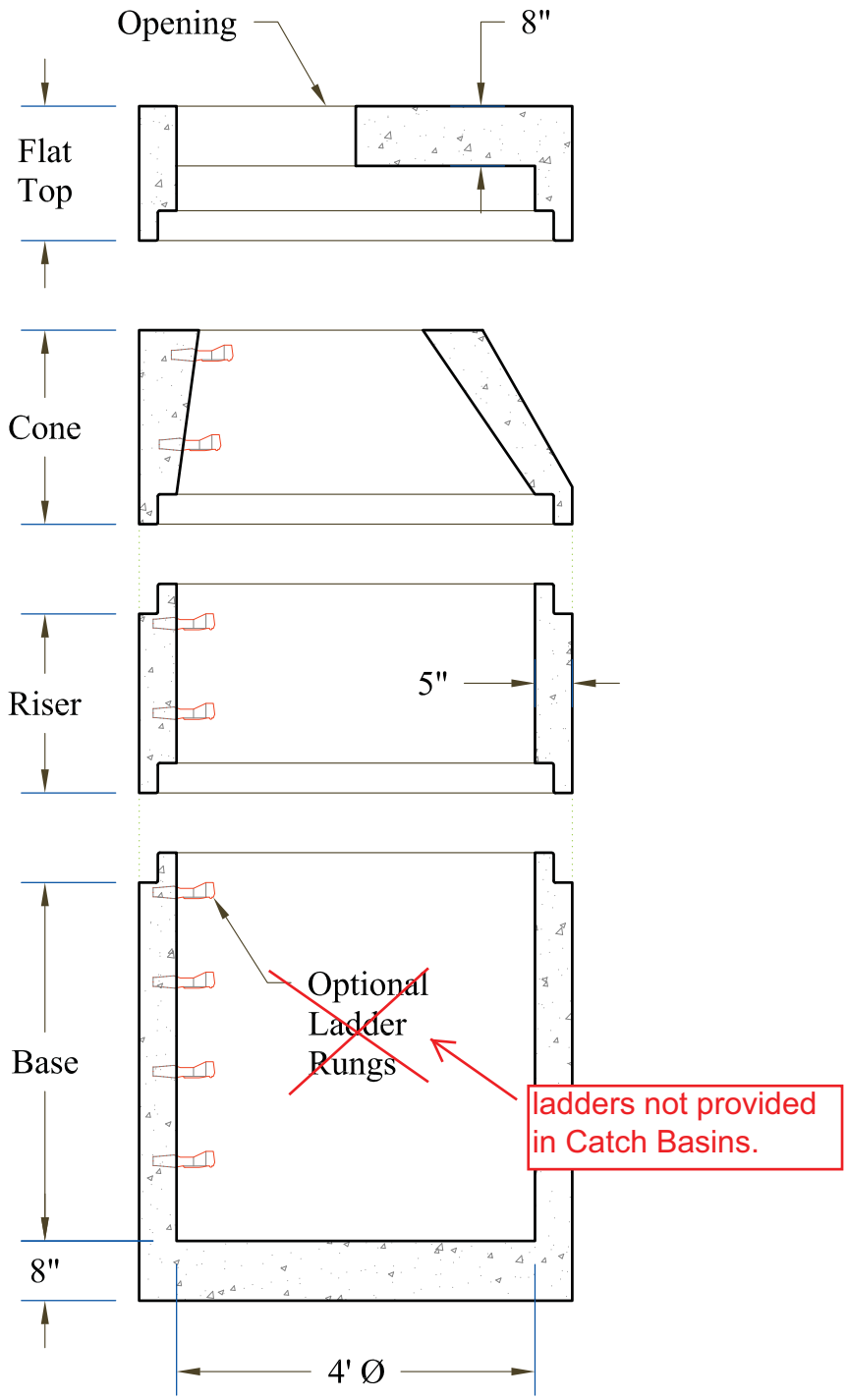

Section View

Standard Sizes

Flat Top

Height	Weight
1'-0"	1,620 lb
1'-6"	2,040 lb

Opening

Size	Shape
24"	Square
24"	Round
30"	Square
30"	Round

Cone

Height	Hole	Weight
2'-2"	30"Ø	1,620 lb
2'-4"	24"Ø	2,040 lb
3'-2"	24"Ø	2,040 lb

Riser

Height	Weight
1'-0"	845 lb
2'-0"	1,690 lb
3'-0"	2,535 lb
4'-0"	3,380 lb
5'-0"	4,225 lb

Base

Height	Weight
1'-0"	2,770 lb
2'-0"	3,615 lb
3'-0"	4,460 lb
4'-0"	5,305 lb
5'-0"	6,150 lb
6'-0"	6,995 lb

Custom Heights & Openings Available

Design Notes:

-Concrete Minimum 5000 psi at 28 days
-Cut Outs for Pipe Entries or Flexible Sleeves as Required
-Optional Steel Reinforced Copolymer Polypropolene Ladder Rungs at 12" O.C. or as Required
-Meets AASHTO H-20 Loading
-Meets ASTM C-478 Specifications
-Weights May Vary

CD

TRELLEBORG

Kor-N-Seal® II
206 Series Pipe-to-Manhole Connector

CORRUGATED RUBBER DESIGN

- *Corrugated profile for easier installation and positioning of the pipe in trench*
- *Designed for larger pipe sizes 18" - 51"*
- *Meets the specifications of ASTM C923*

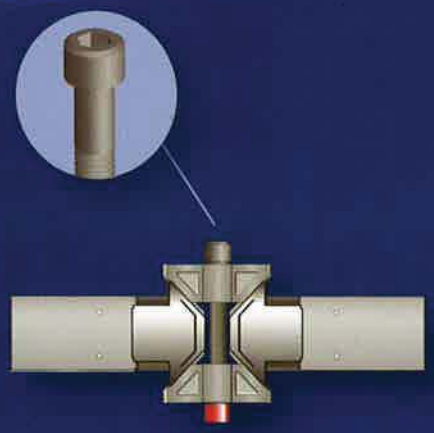

The 206 Series Connector is designed with an Allen Head Wedge Bolt for easier installation of the connector into the manhole.

npc

Kor-N-Seal II
206 Series Pipe-to-Manhole Connector

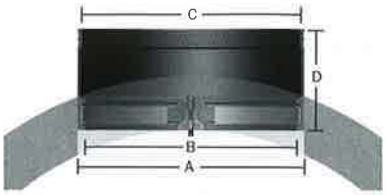

18" HDPE

- To fit larger sized pipe into smaller diameter manholes, please refer to our Kor-N-Seal II 306 Series Connectors.

- Using Corrugated Pipe: Adapters are required when using Corrugated Pipe. Refer to the Corrugated Pipe Adapter Data Sheet for details.

P/N	Suggested Pipe O.D. Range	Hole Size Range	Connector Dimension			Pipe Clamps		Minimum Manhole Size Required
		A	B	C	D	Qty	P/N	
S206-18L	15.000 – 15.625	17.98 – 18.13	15.875	16	10.50	2	I-282	48/4
S206-20 S206-20L	15.625 – 17.000 17.000 – 17.625	19.98 – 20.13	17.875	17 18	10.50	2 2	I-282 I-306	48/4
S206-22 S206-22L	17.625 – 19.000 19.000 – 19.625	21.98 – 22.13	19.875	19 20	10.50	2 2	I-318 I-348	48/4
* S206-24A	18.000 – 19.500	23.98 – 24.13	21.875	18.75	10.00	4	I-180	48/5
S206-24 S206-24L	19.625 – 21.000 21.000 – 21.625	23.98 – 24.13	21.875	21 22	10.50	4 4	I-180	48/5
S206-26 S206-26L	21.625 – 23.000 23.000 – 23.625	26.00 – 26.20	23.875	23 24	10.50	4 4	I-190 I-218	48/5
S206-28 S206-28L	23.625 – 25.000 25.000 – 25.625	28.00 – 28.20	25.875	25 26	10.50	4 4	I-218	48/5
S206-30 S206-30L	25.625 – 27.000 27.000 – 27.625	30.00 – 30.20	27.875	27 28	10.50	4 4	I-218 I-242	48/6
S206-32 S206-32L	27.625 – 29.000 29.000 – 29.625	32.00 – 32.20	29.875	29 30	10.50	4 4	I-242	60/6
S206-34 S206-34L	29.625 – 31.000 31.000 – 31.625	34.00 – 34.20	31.875	31 32	10.50	4 4	I-258	60/6
S206-36 S206-36L	31.625 – 33.000 33.000 – 33.625	36.00 – 36.20	33.875	33 34	10.50	4 4	I-282	60/7
S206-38 S206-38L	33.625 – 35.000 35.000 – 35.625	38.00 – 38.20	35.875	35 36	10.50	4 4	I-282 I-306	60/7
S206-40 S206-40L	35.625 – 37.000 37.000 – 37.625	40.00 – 40.20	37.875	37 38	10.50	4 4	I-306	60/8
S206-42 S206-42L	37.625 – 39.000 39.000 – 39.625	42.00 – 42.20	39.875	39 40	10.50	4 4	I-318 I-348	60/8
S206-44 S206-44L	39.625 – 41.000 41.000 – 41.625	44.00 – 44.20	41.875	41 42	10.50	4 4	I-348	72/8
S206-46 S206-46L	41.625 – 43.000 43.000 – 43.625	46.00 – 46.20	43.875	43 44	10.50	4 4	I-348 I-242	84/8
S206-48 S206-48L	43.625 – 45.000 45.000 – 45.625	48.00 – 48.20	45.875	45 46	10.50	6 6	I-242 I-258	84/8
S206-50 S206-50L	45.000 – 45.625 45.625 – 47.000	50.00 – 50.25	47.250	46 47	10.50	6 6	I-258	84/9
S206-52 S206-52L	47.000 – 47.625 47.625 – 49.000	52.00 – 52.25	49.250	48 49	10.50	6 6	I-282	84/9
S206-54 S206-54L	49.000 – 49.625 49.625 – 51.000	54.00 – 54.25	51.250	50 51	10.50	6 6	I-282	96/8.5

Larger sizes quoted upon request.

TRELLEBORG

Trelleborg Pipe Seals Milford, Inc.
P.O. Box 301, 250 Elm Street, Milford, New Hampshire 03055 U.S.A.
Tel: 800-626-2180 603-673-8680 Fax: 603-673-7271 www.trelleborg.com/npc

TRELLEBORG

NPC - Corrugated Pipe Adapter

- *Provides a good sealing surface on corrugated HDPE pipe*
- *Easy to install - Simply stretch it over the pipe to the desired location*
- *Certified to ASTM C923 when used with a Kor-N-Seal® Connector*
- *Specifically designed for use with most sizes of ADS, Hancor, Lane, N-Flow, Quality Culvert, JM Eagle and Contech A2000*

The unique design of our Pipe Adapter distributes the force from the pipe clamp on our Kor-N-Seal connector directly against the inside walls of the pipe corrugations, creating a watertight seal up to 24 inches.*

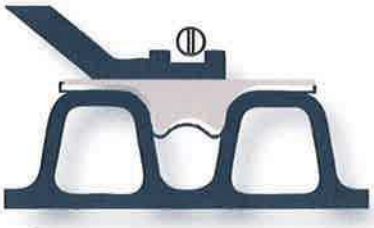

NPC Corrugated Pipe Adapters covered under US patent number: US 6,364,373

NPC - Corrugated Pipe Adapter

Pipe Size	Pipe Mfg.	Pipe O.D. Ref. ± ¼	Adapter Part No.	Kor-N-Seal Connector	Sealing Capability
8	ADS	9 1/8	CGA-8A	S106-12 or S406-12	WT
	Hancor	9 1/8	CGA-8H		WT
	Lane	9 7/16	CGA-8L		WT
10	ADS	11 3/8	CGA-10A	S106-16A	WT
	Hancor	11 3/8	CGA-10H		WT
	Lane	11 3/4	CGA-10L		WT
12	ADS	14 3/8	CGA-12A	S106-16T or S106-20BWS	WT
	Hancor	14 3/8	CGA-12H		WT
	Lane	14 9/16	CGA-12L	S106-20BWS	WT
	JM Eagle	14 1/4	CGA-12JM		ST
	Quality Culvert	14 1/2	CGA-12Q		ST
	Baughman	14 1/2	CGA-12B		ST
	N-Flow	15	CGA-12N		ST
	Contech A2000	12 3/4	CGA-12C	S106-16A	WT
15	ADS	17 1/2	CGA-15A	S106-20WS, S206-20L	WT
	Hancor	17 1/2	CGA-15H		WT
	Lane	17 7/16	CGA-15L		WT
	Baughman	18 1/4	CGA-15B	S206-22, S206-24A	ST
	N-Flow	18	CGA-15N		
	Quality Culvert	17 1/2	CGA-15Q	S106-20WS, S206-20L	ST
	Contech A2000	15 5/8	CGA-15C	S106-20AWS	WT
	JM Eagle	17 1/2	CGA-15JM	S106-20WS, S206-20L	ST
18	ADS	21 3/16	CGA-18A	S206-24L, S306-24L	WT
	Hancor	21 3/16	CGA-18H		WT
	Lane	21 3/16	CGA-18L		WT
	Baughman	21 4/19	CGA-18B		ST
	N-Flow	21	CGA-18N		ST
	Quality Culvert	21 5/16	CGA-18Q		ST
	Contech A2000	19 1/4	CGA-18C	S206-22L, S306-22L or S206-24A	WT
	JM Eagle	20 7/8	CGA-18JM	S206-24	WT
21	Contech A2000	22 9/16	CGA-21C	S206-26, S306-26	WT
24	ADS	27 3/4	CGA-24A	S206-30L-32, S306-30L-32	WT
	Hancor	27 3/4	CGA-24H		WT
	Lane	28	CGA-24L	S206-32, S306-32	WT
	Baughman	28 1/2	CGA-24B		ST
	N-Flow	28	CGA-24N		ST
	Quality Culvert	27 15/16	CGA-24Q	S206-30L-32, S306-30L-32	ST
	Contech A2000	25 1/2	CGA-24C	S206-28L, S306-28L	WT
	JM Eagle	27 1/2	CGA-24JM	S206-30L	ST

Pipe Size	Pipe Mfg.	Pipe O.D. Ref. ± ¼	Adapter Part No.	Kor-N-Seal Connector	Sealing Capabil.
30	ADS	35	CGA-30A	S206-38L, S306-38L	ST
	Hancor	36	CGA-30H	S206-40, S306-40	ST
	N-Flow	35	CGA-30N	S206-38L, S306-38L	ST
	Baughman	35 13/20	CGA-30B	S206-40, S306-40-STORM	ST
	Quality Culvert	34 7/8	CGA-30Q	S206-38, S306-38L-STORM	ST
	Lane	34 3/4	CGA-30L		ST
	Contech A2000	32 3/16	CGA-30C	S206-36, S306-36	ST
	JM Eagle	34 5/8	CGA-30JM	S206-38, S306-38-STORM	ST
36	ADS	41 7/8	CGA-36A	S206-44L-46, S306-44L-46	ST
	Hancor	41 3/8	CGA-36H		ST
	Lane	40 7/8	CGA-36L	S206-44L S306-44L-STORM	ST
	Baughman	41 1/2	CGA-36B		P
	N-Flow	41 1/8	CGA-36N		ST
	Quality Culvert	41 3/8	CGA-36Q		ST
	Contech A2000	38 3/4	CGA-36C	S206-42L, S306-42L	ST
	JM Eagle	41 1/2	CGA-36JM	S206-44L	ST
42	ADS	47 11/16	CGA-42A	S206-52L	ST
	Hancor	47 15/16	CGA-42H		ST
	Baughman	48 1/5	CGA-42B		ST
	N-Flow	48	CGA-42N		ST
	Quality Culvert	48 1/4	CGA-42Q		ST
	Lane	47 3/8	CGA-42L	S206-52	ST
	JM Eagle	47 3/8	CGA-42JM		ST
48	ADS	53 7/16	CGA-48A	S206-58L	ST
	Hancor	53 11/16	CGA-48H		ST
	Lane	54	CGA-48L		ST
	Baughman	54 3/10	CGA-48B		ST
	N-Flow	54	CGA-48N		ST
	Quality Culvert	54 3/4	CGA-48Q		ST
	JM Eagle	53 13/16	CGA-48JM	S206-58	ST
54	Hancor	60 15/16	CGA-54H	S206-64L S206-66	ST
60	ADS	66 1/4	CGA-60A	S206-70L	ST
	Hancor	67 3/16	CGA-60H	S206-72	ST

WT = Watertight

ST = Soiltight

TRELLEBORG

Trelleborg Pipe Seals Milford, Inc.
P.O. Box 301, 250 Elm Street, Milford, New Hampshire 03055 U.S.A.
Tel: 800-626-2180 603-673-8680 Fax: 603-673-7271 www.trelleborg.com/npc

ConSeal™ Concrete Sealants INC.

CS102

Butyl Rubber Sealant For All Precast Structures; Meets Specs.

APPLICATIONS

For self-sealing joints in: Manholes, Concrete Vaults, Septic Tanks, Concrete Pipe, Box Culverts, Utility Vaults, Burial Vaults, and Vertical Panel Structures.

SEALING PROPERTIES

- Provides permanently flexible watertight joints.
- Low to high temperature workability: 30°F to 120°F (-1°C to 48°C)
- Rugged service temperature: -30°F to +200°F (-34°C to +93°C)
- Excellent chemical and mechanical adhesion to clean, dry surfaces.
- Sealed Joints will not shrink, harden or oxide upon aging.
- No priming normally necessary. When confronted with difficult installation conditions, such as wet concrete or temperatures below 40°F (4°C), priming the concrete will improve the bonding action. Consult Concrete Sealants for the proper primer to meet your application.

HYDROSTATIC STRENGTH

ConSeal CS-102 meets the hydrostatic performance requirement as set forth In ASTM C-990 section 10.1 (Performance requirement: 10psi for 10 minutes in straight alignment – in plant, quality control test for joint materials.)

SPECIFICATIONS

ConSeal CS-102 meets or exceeds the requirements of Federal Specification SS-S-210 (210-A), AASHTO M-198B, and ASTM C-990-91.

P.O. Box 176, New Carlisle OH, 45344 • 937.845.8776 or 800.332.7325
FAX 937-845-3587 • www.conseal.com

ConSeal™ Concrete Sealants INC.

CS102

Butyl Rubber Sealant For All Precast Structures; Meets Specs.

PHYSICAL PROPERTIES

	Spec	Required*	CS 102
Hydrocarbon blend content % by weight	ASTM D4 (mod.)	50% min.	51%
Inert mineral filler % by weight	AASHTO T111	30% min.	35%
Volatile Matter % by weight	ASTM D6	2% max.	1.2
Specific Gravity, 77°F	ASTM D71	1.15-1.50	1.25
Ductility, 77°F	ASTM D113	5.0 min.	10
Penetration, cone 77°F, 150 gm. 5 sec.	ASTM D217	50-100	55-60
Penetration, cone 32°F, 150 gm. 5 sec.	ASTM D217	40 mm	40-65
Flash Point, C.O.C., °F	ASTM D92	350°F min.	450°F
Fire point, C.O.C., °F	ASTM D92	375°F min.	475°F

IMMERSION TESTING

- 30-Day Immersion Testing: No visible deterioration when tested in 5% Caustic Potash, 5% Hydrochloric Acid, 5% Sulfuric Acid, and 5% saturated Hydrogen Sulfide. *

- One Year Immersion Testing: No visible deterioration when tested in 5% Formaldehyde, 5% Formic Acid, 5% Sulfuric Acid, 5% Hydrochloric Acid, 5% Sodium Hydroxide, 5% Hydrogen Sulfide and 5% Potassium Hydroxide.

- Requirements of ASTM C-990 Standard Specification for Joints for Concrete Pipe, Manholes, and Precast Box Sections Using Preformed Flexible Joint Sealants.

LIMITED WARRANTY
This information is presented in good faith, but we cannot anticipate all conditions under which this information and our products, or the products of other manufacturers in combination with our products, may be used. We accept no responsibility for results obtained by the application of this information or the safety and suitability of our products, either alone or in combination with other products. Users are advised to make their own tests to determine the safety and suitability of each such product or product combinations for their own purposes. It is the user's responsibility to satisfy himself as to the suitability and completeness of such information for this own particular use. We sell this product without warranty, and buyers and users assume all responsibility and liability for loss or damage arising from the handling and use of this product, whether used alone or in combination with other products.

P.O. Box 176, New Carlisle OH, 45344 • 937.845.8776 or 800.332.7325
FAX 937-845-3587 • www.conseal.com