S.D. Ireland Companies
Precast Division

193 Industrial Ave. Williston, VT 05495
P.O. Box 2286 South Burlington, VT 05407
p: 802-863-6222 f: 802-860-1528
www.sdireland.com

Attention:	Brian Richardson	Date:	1/12/2015
Company:	C.C.S. Constructors	Job Name:	Stowe BRF 0235(11)
Address:	138 Munson Ave	Job Number:	#15163
City, St, Zip:	Morrisville, VT 05661	Regarding:	Abutment, Wing Wall, and Retaining Wall Submittal #2
Ph: / Fax:	802-888-7701		

WE ARE SENDING:

- [ ] Quote
- [x] Details
- [ ] Other: _____
- [x] Submittals
- [ ] Prints
- [ ] Plans
- [ ] Specifications
- [ ] Copy Of Letter
- [ ] Change Order
- [ ] Samples
- [ ] Revised Submittals

Copies	Date	Pages	Description
1	1/12/2015	1	Transmittal Cover Page
1	1/8/2015	11	S.D.I. Abutment, Wing Wall, and Approach Slab Drawings
1	1/12/2015	5	Dimension Fabricators Reinforcement Drawings
1	4/17/2014	1	State Concrete Mix Design
1	11/21/2014	1	Tensioning Plate Detail
1		2	Grout Splice Sleeve Detail
1	1/8/2015	13	Lifting Analysis Calculations and details

These Are Submitted as Checked Below:

- [ ] For Approval
- [ ] Approved as Submitted
- [x] Resubmit __ Copies for Approval
- [x] For Your Use
- [ ] Approved as Noted
- [ ] Submit__ Copies for Distribution
- [ ] As Requested
- [ ] Returned for Corrections
- [ ] Return __ Corrected Prints
- [ ] For Review and Comment
- [ ] Prints Returned After Loan to Us
- [ ] For Bids Due: _____
- [ ] Other:

Notes/Remarks:

Brian,

Please pass on to the state for approvals.

Let me know if you have any questions.

Thank you.

Eric Barendse x265

Copy To: _____

Signed: Eric Barendse

If enclosures are not as noted, kindly notify us at once.

Precast Bridge Abutments

Stowe BRF 0235(II)

Concrete:

Mix Designation: P50TER

1. Specified Mix Design	5000 PSI
2. Proposed Mix Design	6000 PSI
3. Striping Strength	4250 PSI
4. Handling Strength	4250 PSI ⚠
5. Shipping Strength	5000 PSI
6. Install Strength	5000 PSI
7. Traffic Loading	5000 PSI

Fabrication Tolerances:

1. Width	±1/4"
2. Height	±1/4"
3. Length	±1/2"
4. Rebar Cover	3" Min. (Unless Noted Otherwise)
5. Rebar Spacing	±1"
6. Rebar Clearance	±1/4"
7. Insert Placement	±1/4"

Reinforcing:

General Notes:

1. Reinforcing Steel - ASTM A615, Grade 60, Level II, Dual Coated
2. Materials and Manufacturing shall conform to ASTM C1433
3. Bar tied at every intersection.
4. Grout Sleeves to be epoxy coated.
5. 5' long test bars for each bar size size will be provided along with (3) grout couplers for each size bar. ⚠

Tolerances:

1. Spacing ±1"
2. Clearance ±1/4"
3. Clear Cover 3" U.N.O.

Lap Lengths:

1. Per AASHTO 5.11.2.1.1 & 5.11.5.3.1
   Lap Length for Level II (Dual Coated):
   #4 Bar=17"
   #5 Bar=26"
   #6 Bar=39"
   #7 Bar=53"
   #8 Bar=69"

Note: See pg 6 for typical vertical lap lengths for bars extending into cast in place abutment sections ⚠

General Notes:

1. All precast pieces will be dry fit prior to shipping.
2. All lifting anchor points to be grouted after use.(by site contractor
3. All rebar spacing chairs to be plastic
4. All exposed edges to be chamfered $\frac{3}{4}$" ⚠

Post Tensioning

1. All anchoring assemblies will be galvanized plated.
2. Two tensioning strands per duct.
3. Tension ducts will be 3" SCH 40 PVC conduit.
4. Post tension strands will be .5"Ø, 270 ksi, low relaxation, 7-wire strands.
5. Strands will be tensioned to 32 kips prior to the H-pile sleeves being filled with HPC RS.
6. Tensioning block outs to be filled with grout of vertical overhead repair material after tensioning is complete. ⚠

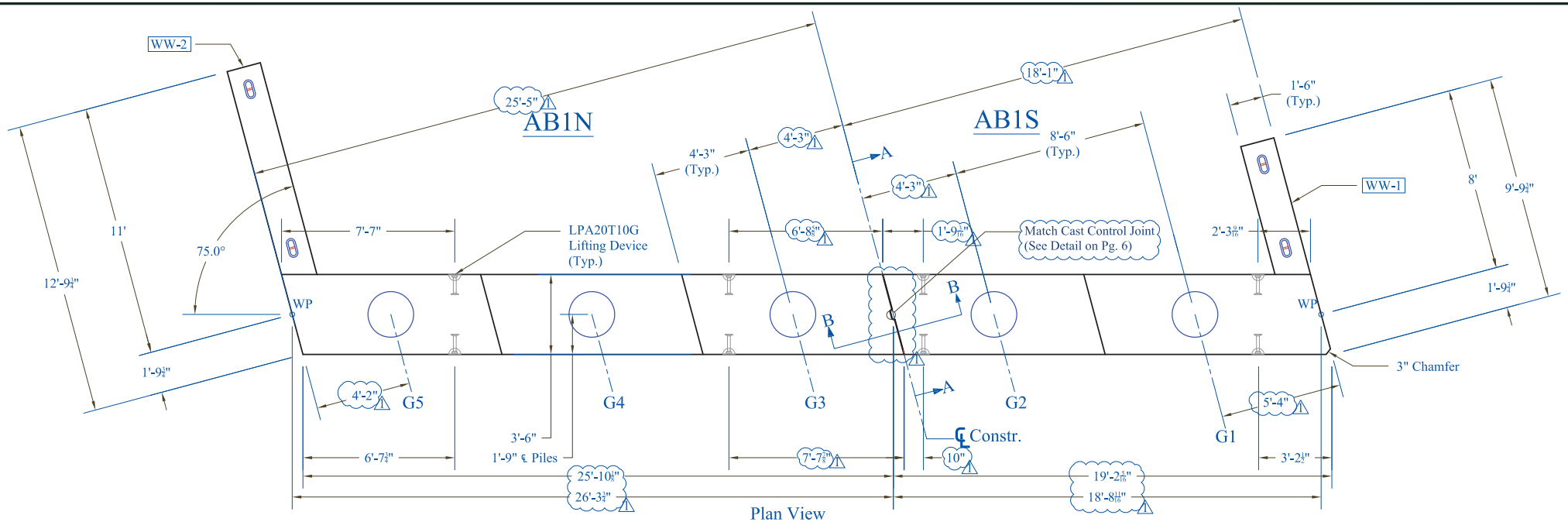

Plan View

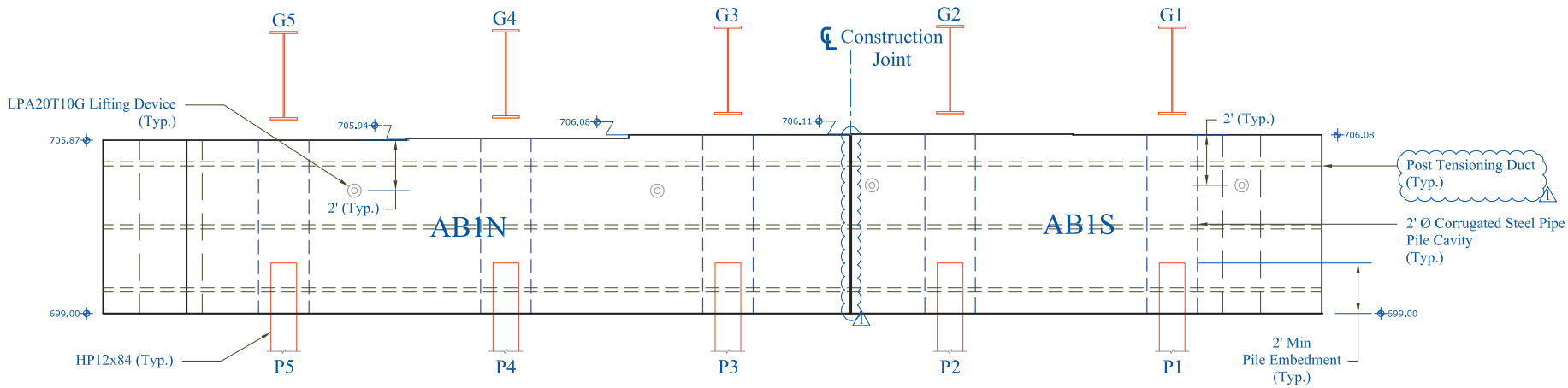

Elevation View

AB1N: 84,926 lbs
AB1S: 62,374 lbs

CONTRACTORS VTSPE:

⚠- Rev. 1 - 01/ 08 /15 - Changes per VTrans Review

PRECAST CONCRETE ABUTMENT SHOP DRAWINGS (SDI JOB #15163)

SUPERVISOR: M. WHEELER
DETAILER: I. ADAMS
CHECKER: E. Barendse
ENGINEER:

PROJECT NAME: Stowe BRF 0235 (II)
PROJECT #: 0235 (II)
LOCATION: Stowe, VT

INSTALLER:
CCS Construction
138 Munson Ave
Morrisville, VT 05661
PH: 802-888-7701

FABRICATOR:
193 INDUSTRIAL AVE.
WILLISTON, VT 05495
Ph: (802) 658-0201

SD Ireland Precast Division

01/08/15

Abutment 1

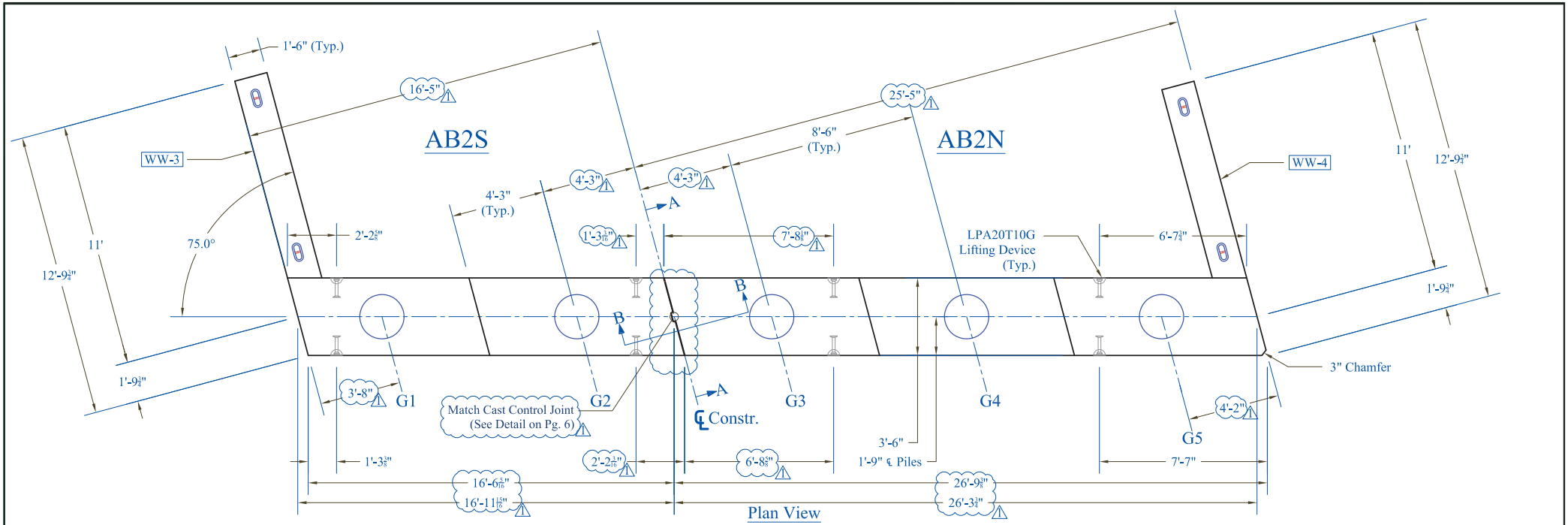

Plan View

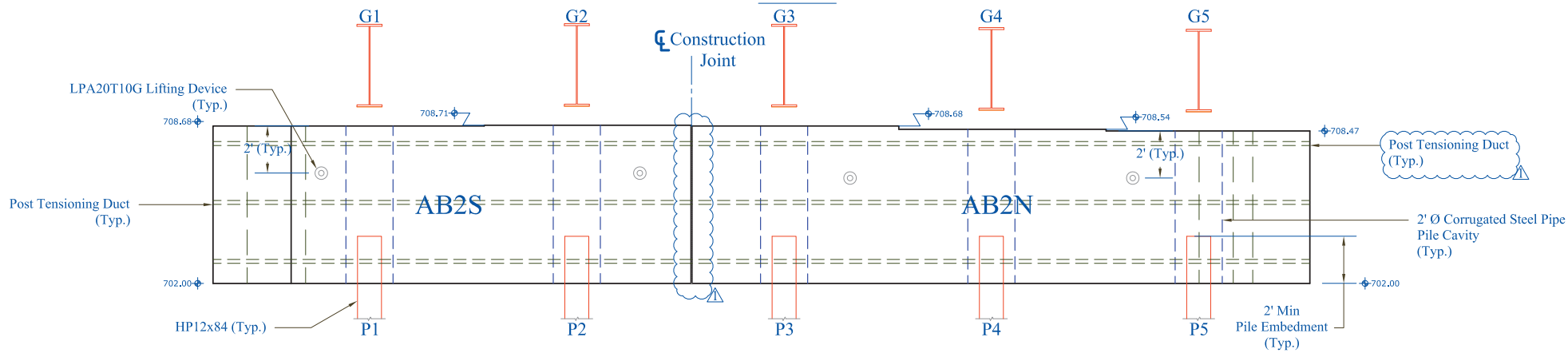

Elevation View

AB2S: 53,774 lbs.
AB2N: 80,126 lbs

CONTRACTORS VTSPE:	⚠- Rev. 1 - 01/ 08 /15 - Changes per VTrans Review	PRECAST CONCRETE ABUTMENT SHOP DRAWINGS (SDI JOB #15163)		INSTALLER: CCS Construction 138 Munson Ave Morrisville, VT 05661 PH: 802-888-7701	FABRICATOR: 193 INDUSTRIAL AVE. WILLISTON, VT 05495 Ph: (802) 658-0201 SD Ireland Precast Division
		SUPERVISOR: M. WHEELER DETAILER: I. ADAMS CHECKER: E. Barendse ENGINEER:	PROJECT NAME: Stowe BRF 0235 (II) PROJECT #: 0235 (II) LOCATION: Stowe, VT	01/08/15	Abutment 2 — 3 of 11

WW2: Plan View

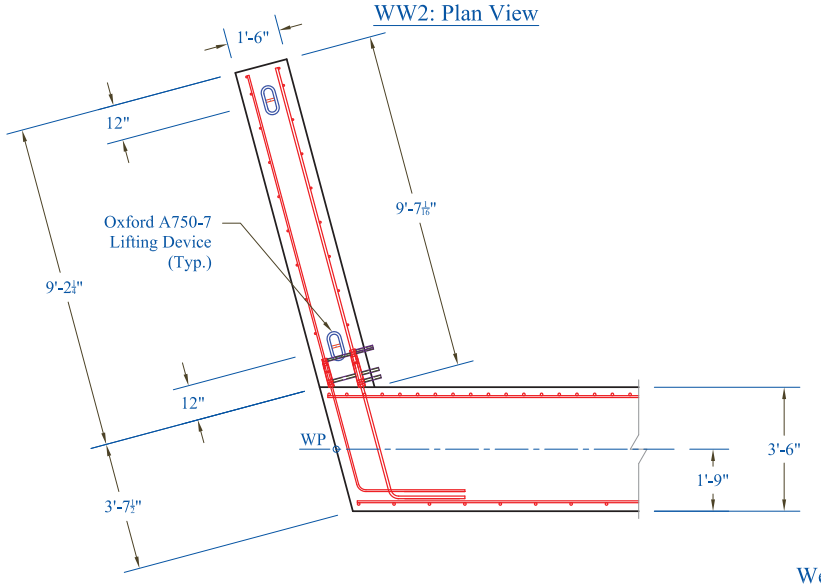

Weight: 9,450 lbs.

WW1: Plan View

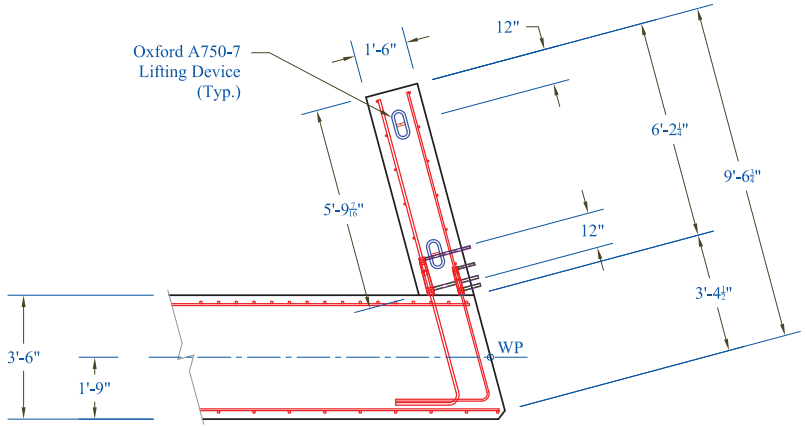

Weight: 9,400 lbs.

WW2: Elevation View

(Reference Dimension Fabricators Sheet F for Bar Size, Type, and Schedule) △1

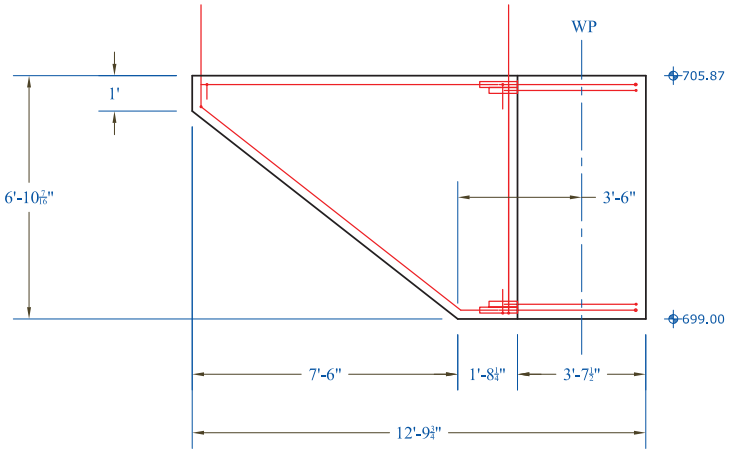

WW1: Elevation View

(Reference Dimension Fabricators Sheet F for Bar Size, Type, and Schedule) △1

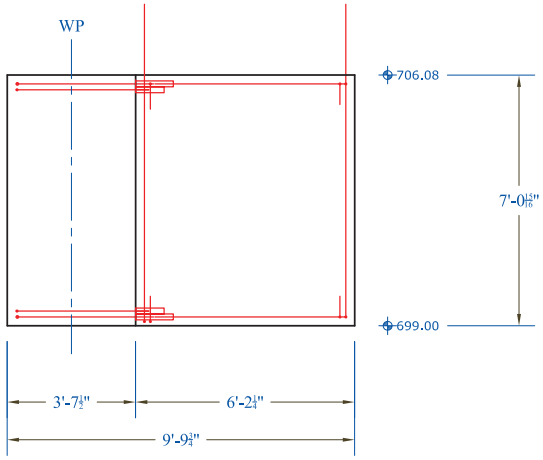

CONTRACTORS VTSPE:

△1 - Rev. 1 - 01/ 08 /15 - Changes per VTrans Review

PRECAST CONCRETE ABUTMENT SHOP DRAWINGS (SDI JOB #15163)

SUPERVISOR: M. WHEELER
DETAILER: I. ADAMS
CHECKER: E. Barendse
ENGINEER:

PROJECT NAME: Stowe BRF 0235 (II)
PROJECT #: 0235 (II)
LOCATION: Stowe, VT

INSTALLER:
CCS Construction
138 Munson Ave
Morrisville, VT 05661
PH: 802-888-7701

FABRICATOR:
193 INDUSTRIAL AVE.
WILLISTON, VT 05495
Ph: (802) 658-0201

SD Ireland Precast Division

01/08/15 | Wingwalls 1 & 2 | 4 of 11

WW3: Plan View

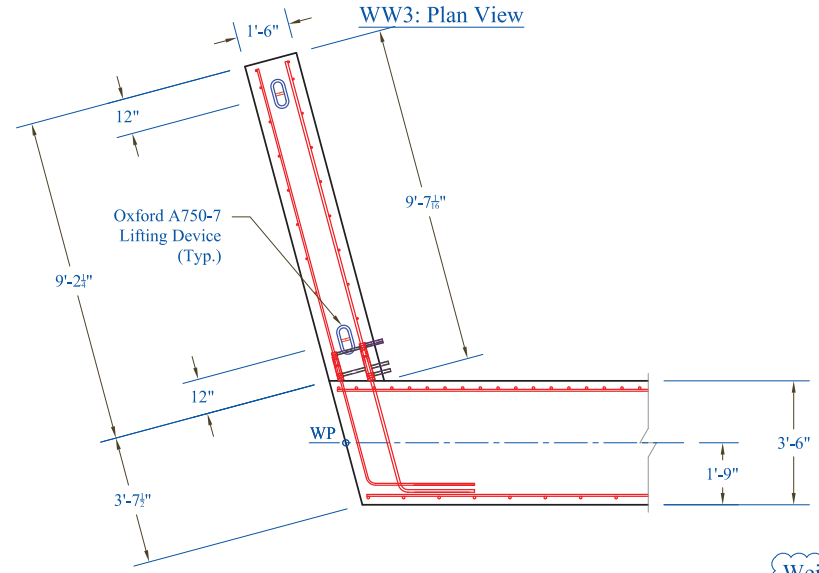

Weight: 9,160 lbs.

WW4: Plan View

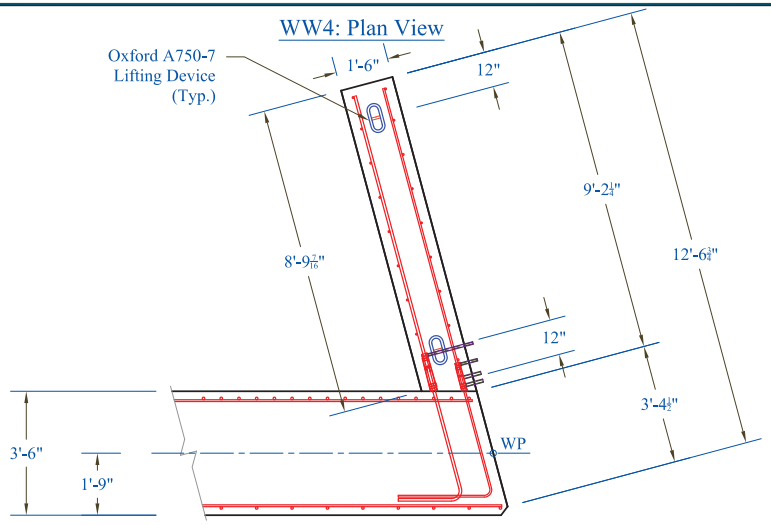

Weight: 8,800 lbs.

WW3: Elevation View

(Reference Dimension Fabricators Sheet J for Bar Size, Type, and Schedule)

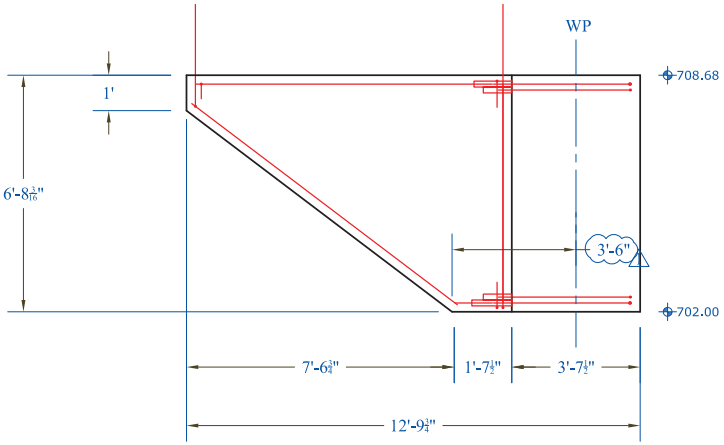

WW4: Elevation View

(Reference Dimension Fabricators Sheet J for Bar Size, Type, and Schedule)

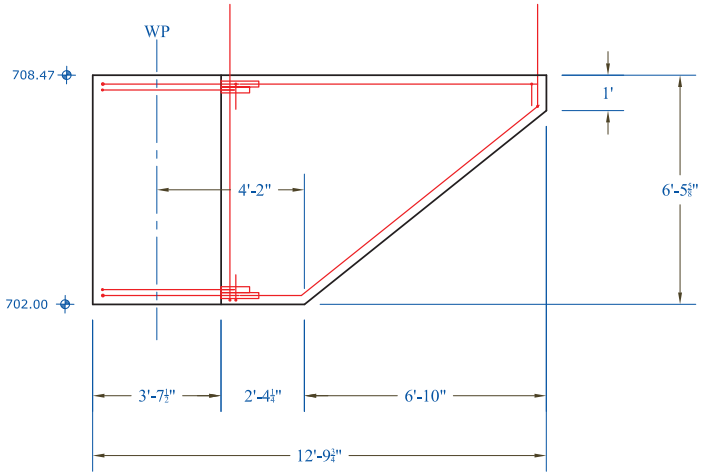

CONTRACTORS VTSPE:

⚠- Rev. 1 - 01/ 08 /15 - Changes per VTrans Review

PRECAST CONCRETE ABUTMENT SHOP DRAWINGS (SDI JOB #15163)

SUPERVISOR: M. WHEELER
DETAILER: I. ADAMS
CHECKER: E. Barendse
ENGINEER:

PROJECT NAME: Stowe BRF 0235 (II)
PROJECT #: 0235 (II)
LOCATION: Stowe, VT

INSTALLER:
CCS Construction
138 Munson Ave
Morrisville, VT 05661
PH: 802-888-7701

FABRICATOR:
193 INDUSTRIAL AVE.
WILLISTON, VT 05495
Ph: (802) 658-0201

SD Ireland Precast Division

01/08/15

Wingwalls 3 & 4

Match Cast Joint Detail

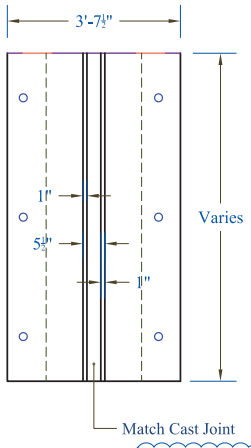

Abutment Face: A-A (Pgs 2 & 3)

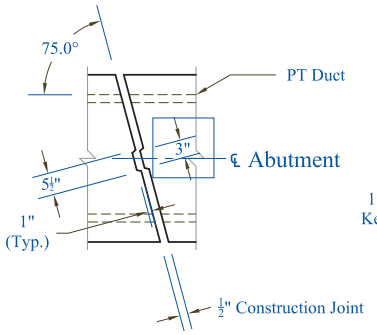

Plan View

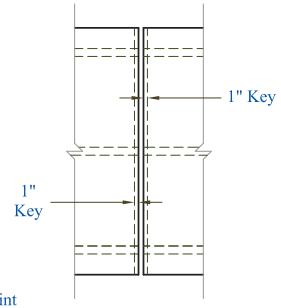

Section View: B-B (Pgs 2 & 3)

Abutment 1 & 2: Typical Section

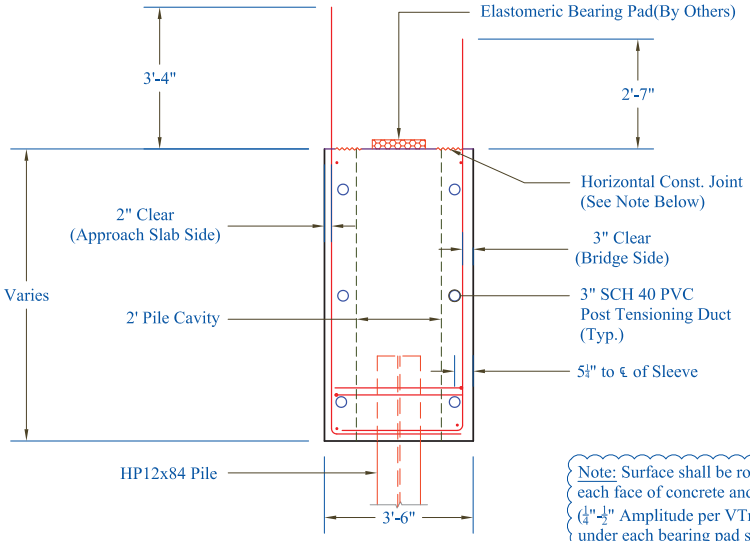

Note: Surface shall be roughened to within 3" of each face of concrete and 3" from H-pile sleeve (¼"-½" Amplitude per VTrans std 501.00). Surface under each bearing pad shall be smooth.

Wingwall Grout Sleeve Detail

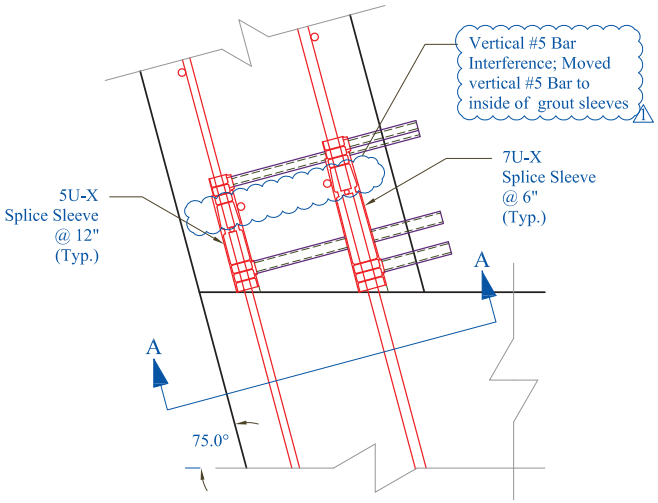

Plan View

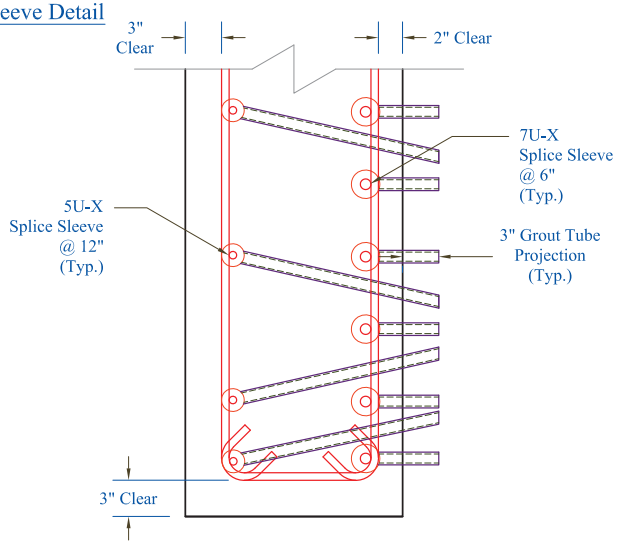

End Section View: A-A

Wingwall 1 - 4: Typical Section

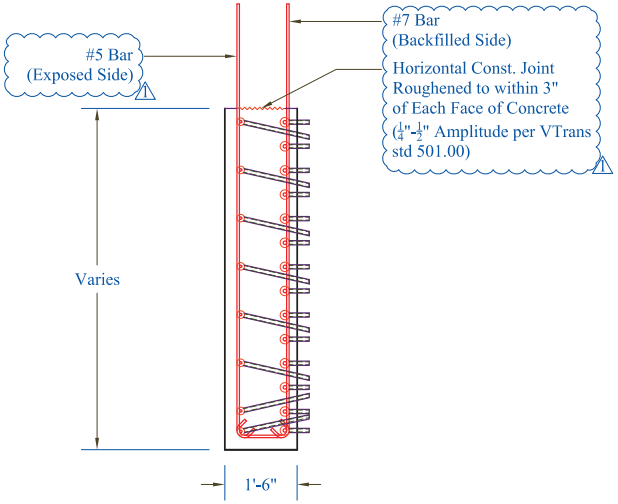

CONTRACTORS VTSPE:

- Rev. 1 - 01/ 08 /15 - Changes per VTrans Review

PRECAST CONCRETE ABUTMENT SHOP DRAWINGS (SDI JOB #15163)

SUPERVISOR: M. WHEELER
DETAILER: I. ADAMS
CHECKER: E. Barendse
ENGINEER:

PROJECT NAME: Stowe BRF 0235 (II)
PROJECT #: 0235 (II)
LOCATION: Stowe, VT

INSTALLER:
CCS Construction
138 Munson Ave
Morrisville, VT 05661
PH: 802-888-7701

FABRICATOR:
193 INDUSTRIAL AVE.
WILLISTON, VT 05495
Ph: (802) 658-0201

SD Ireland Precast Division

01/08/15

Wing Wall & Abutment Details

Retaining Wall Elevation

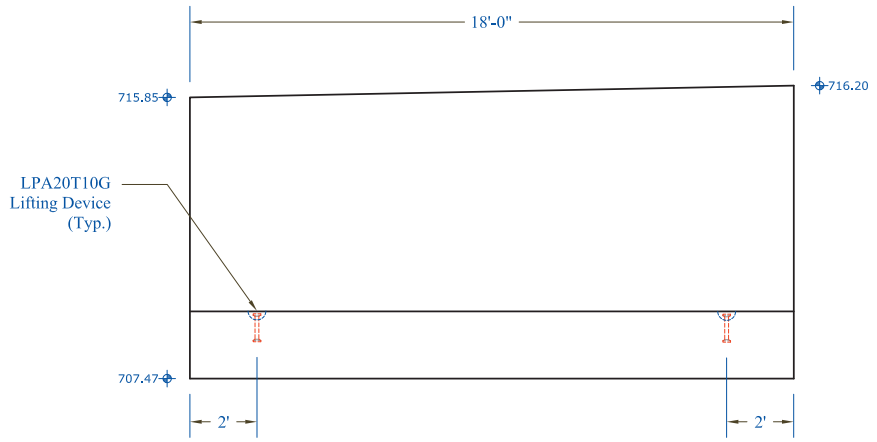

Retaining Wall Typical Section

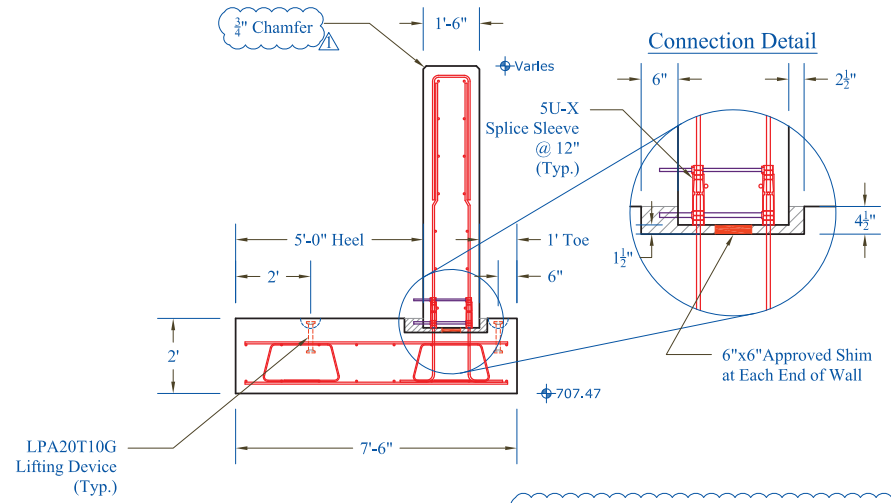

See reinforcing sheet K for bar size/I.D.

Retaining Wall Stem

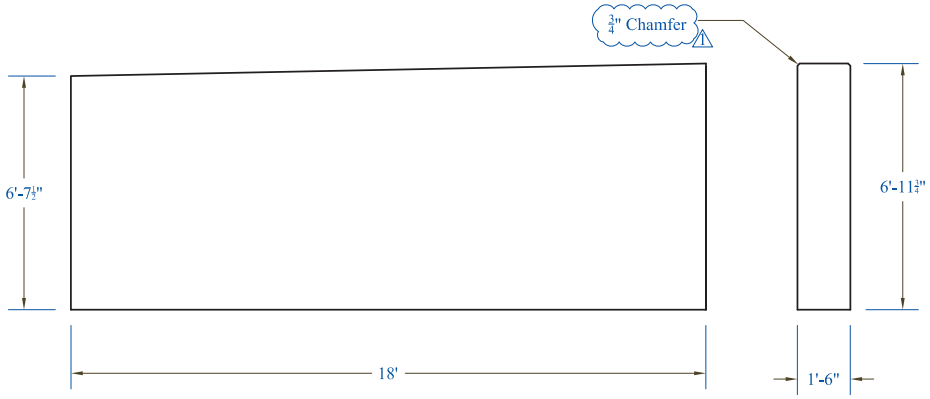

Retaining Wall Footing

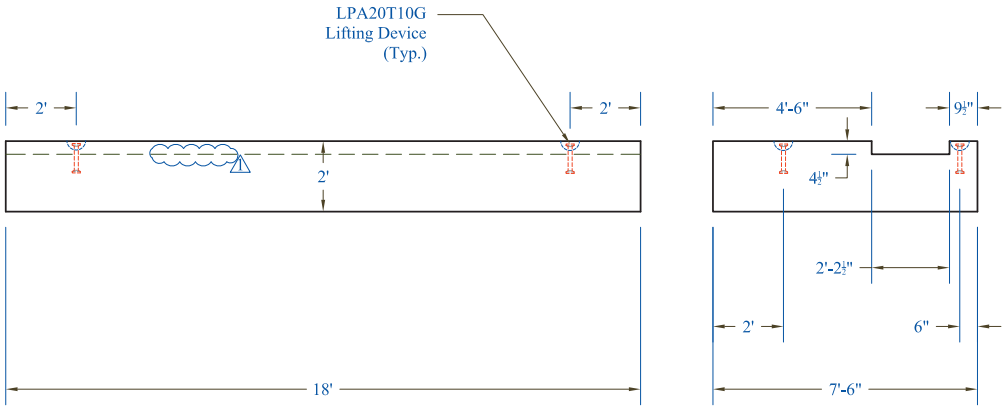

CONTRACTORS VTSPE:	⚠- Rev. 1 - 01/ 08 /15 - Changes per VTrans Review	PRECAST CONCRETE ABUTMENT SHOP DRAWINGS (SDI JOB #15163)	INSTALLER: CCS Construction 138 Munson Ave Morrisville, VT 05661 PH: 802-888-7701	FABRICATOR: 193 INDUSTRIAL AVE. WILLISTON, VT 05495 Ph: (802) 658-0201
		SUPERVISOR: M. WHEELER DETAILER: I. ADAMS CHECKER: E. Barendse ENGINEER:	PROJECT NAME: Stowe BRF 0235 (II) PROJECT #: 0235 (II) LOCATION: Stowe, VT	SD Ireland Precast Division
			01/08/15	Retaining Wall Details

Tension Duct Bearing Plate

* See post tensioning note 1 on pg 1 ⚠

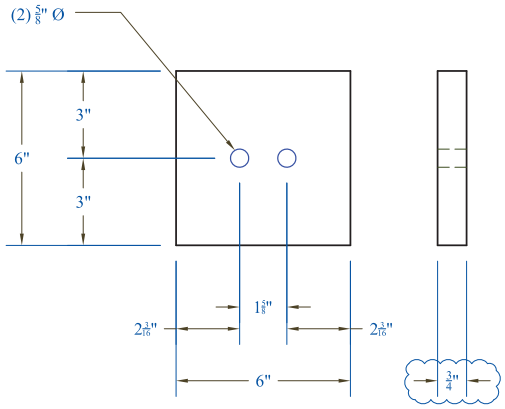

Reinforcement Detail at Tensioning Blockouts

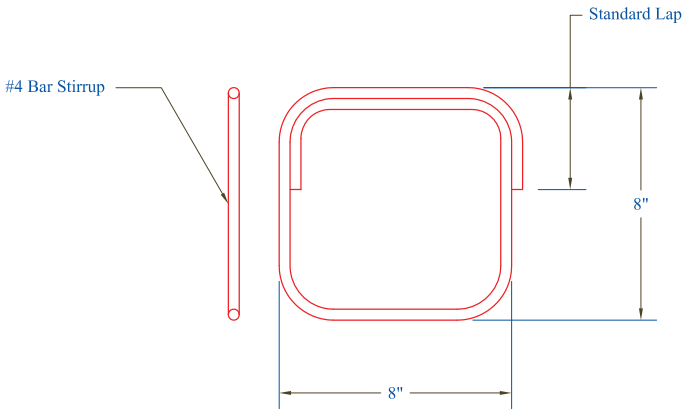

0.5" Barrel Chuck

* See post tensioning note 1 on pg 1 ⚠

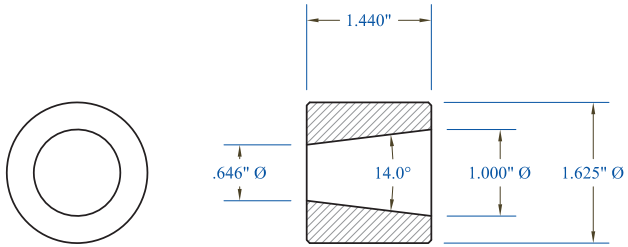

0.5" 2-Part Wedge

* See post tensioning note 1 on pg 1 ⚠

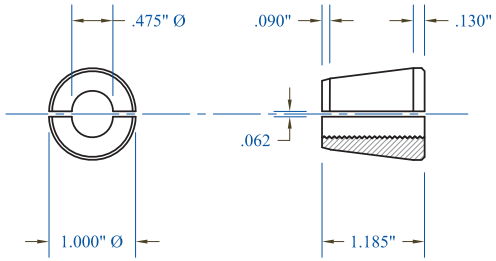

CONTRACTORS VTSPE: ⚠- Rev. 1 - 01/ 08 /15 - Changes per VTrans Review	PRECAST CONCRETE ABUTMENT SHOP DRAWINGS (SDI JOB #15163)	INSTALLER: CCS Construction 138 Munson Ave Morrisville, VT 05661 PH: 802-888-7701	FABRICATOR: 193 INDUSTRIAL AVE. WILLISTON, VT 05495 Ph: (802) 658-0201	SD Ireland Precast Division
	SUPERVISOR: M. WHEELER DETAILER: I. ADAMS CHECKER: E. Barendse ENGINEER:	PROJECT NAME: Stowe BRF 0235 (II) PROJECT #: 0235 (II) LOCATION: Stowe, VT	01/08/15	Post Tensioning	8 of 11

Tensioning Blockout Plan

* See post tensioning notes 1 & 6 on pg 1 ⚠

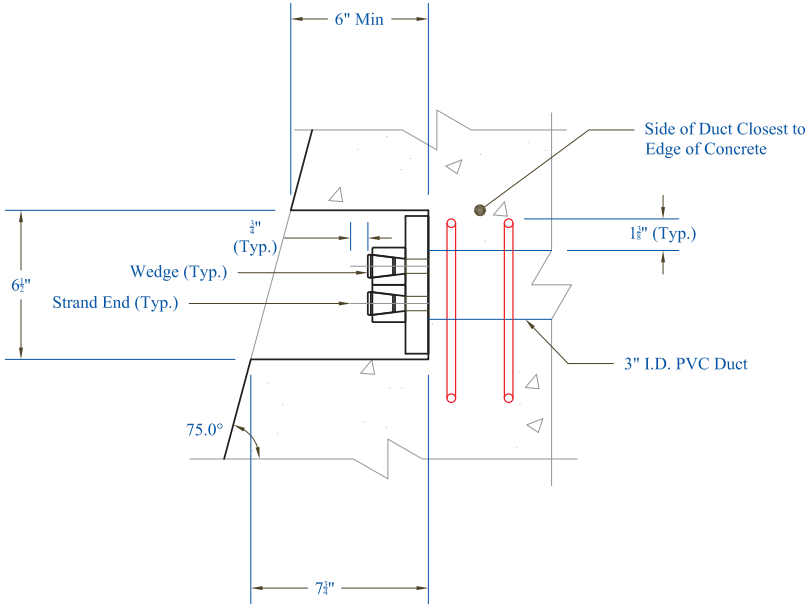

Tensioning Blockout Section

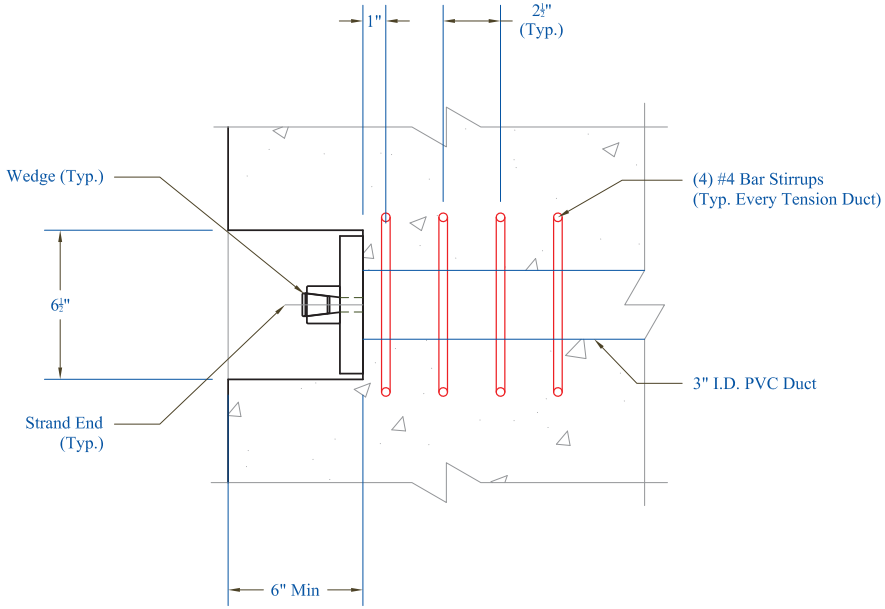

CONTRACTORS VTSPE:

⚠ - Rev. 1 - 01/ 08 /15 - Changes per VTrans Review

PRECAST CONCRETE ABUTMENT SHOP DRAWINGS (SDI JOB #15163)

SUPERVISOR: M. WHEELER
DETAILER: I. ADAMS
CHECKER: E. Barendse
ENGINEER:

PROJECT NAME: Stowe BRF 0235 (II)
PROJECT #: 0235 (II)
LOCATION: Stowe, VT

INSTALLER:
CCS Construction
138 Munson Ave
Morrisville, VT 05661
PH: 802-888-7701

FABRICATOR:
193 INDUSTRIAL AVE.
WILLISTON, VT 05495
Ph: (802) 658-0201

SD Ireland Precast Division

01/08/15

Post Tensioning

End Bar Detail: Abutment 1

(Reference Dimension Fabricators Drawing C
for Bar Size, Type, and Schedule)

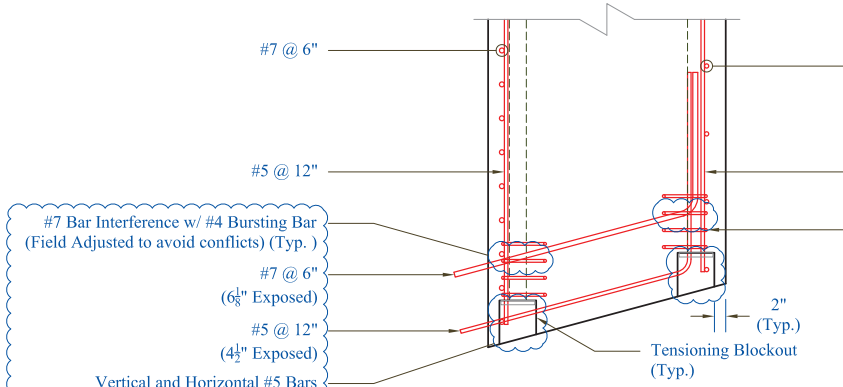

AB1N: End Plan View

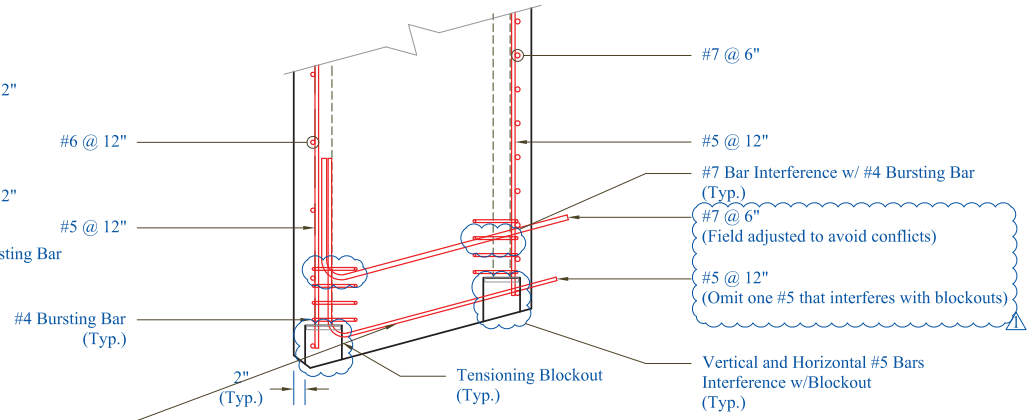

AB1S: End Plan View

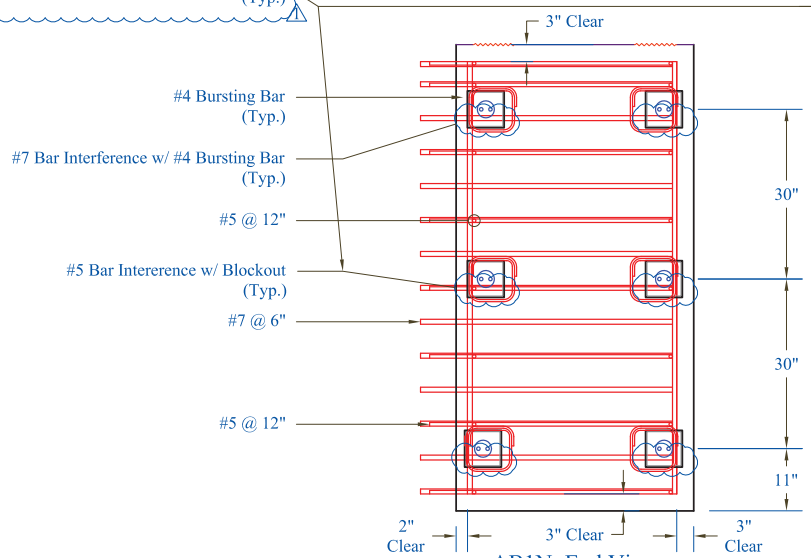

AB1N: End View
(Attaches to WW-2)

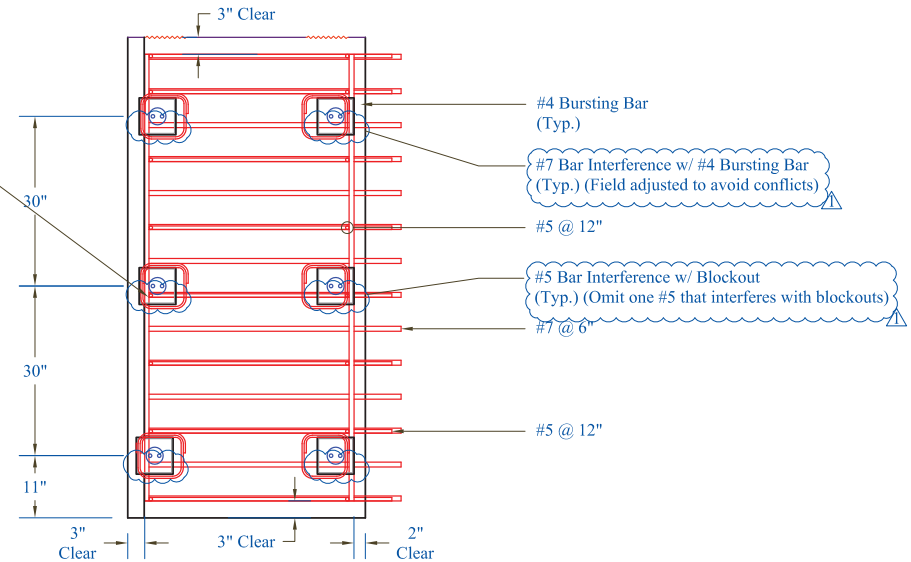

AB1S: End View
(Attaches to WW-1)

CONTRACTORS VTSPE:

⚠- Rev. 1 - 01/ 08 /15 - Changes per VTrans Review

PRECAST CONCRETE ABUTMENT SHOP DRAWINGS (SDI JOB #15163)

SUPERVISOR: M. WHEELER
DETAILER: I. ADAMS
CHECKER: E. Barendse
ENGINEER:

PROJECT NAME: Stowe BRF 0235 (II)
PROJECT #: 0235 (II)
LOCATION: Stowe, VT

INSTALLER:
CCS Construction
138 Munson Ave
Morrisville, VT 05661
PH: 802-888-7701

01/08/15

FABRICATOR:
193 INDUSTRIAL AVE.
WILLISTON, VT 05495
Ph: (802) 658-0201

SD Ireland Precast Division

End Bar Detail Abmt.1

End Bar Detail: Abutment 2

(Reference Dimension Fabricators Drawing D
for Bar Size, Type, and Schedule)

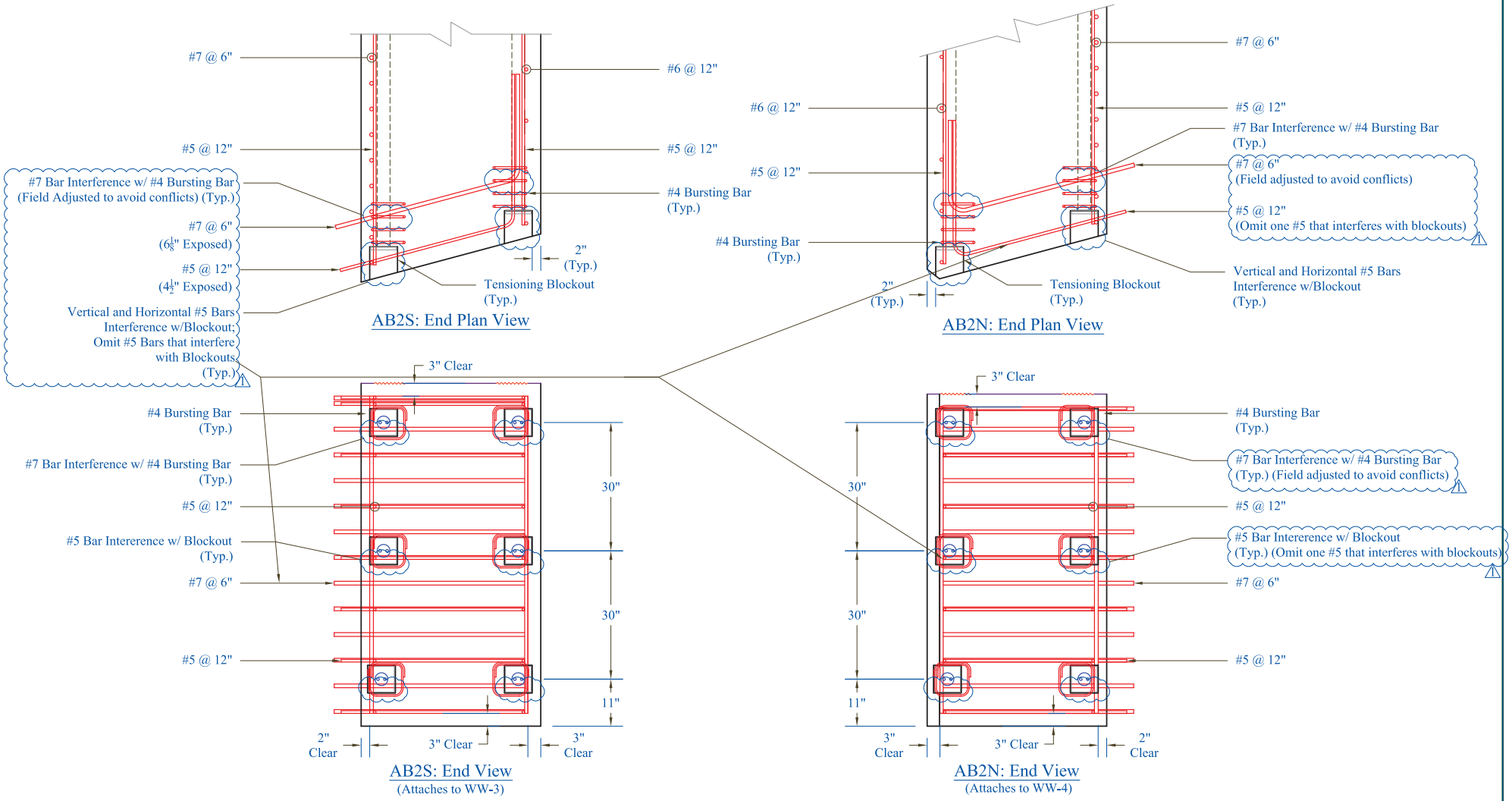

CONTRACTORS VTSPE: ⚠- Rev. 1 - 01/ 08 /15 - Changes per VTrans Review

PRECAST CONCRETE ABUTMENT SHOP DRAWINGS (SDI JOB #15163)

SUPERVISOR: M. WHEELER
DETAILER: I. ADAMS
CHECKER: E. Barendse
ENGINEER:

PROJECT NAME: Stowe BRF 0235 (II)
PROJECT #: 0235 (II)
LOCATION: Stowe, VT

INSTALLER:
CCS Construction
138 Munson Ave
Morrisville, VT 05661
PH: 802-888-7701

FABRICATOR:
193 INDUSTRIAL AVE.
WILLISTON, VT 05495
Ph: (802) 658-0201

SD Ireland Precast Division

01/08/15 | End Bar Detail Abmt.2 | 11 of 11

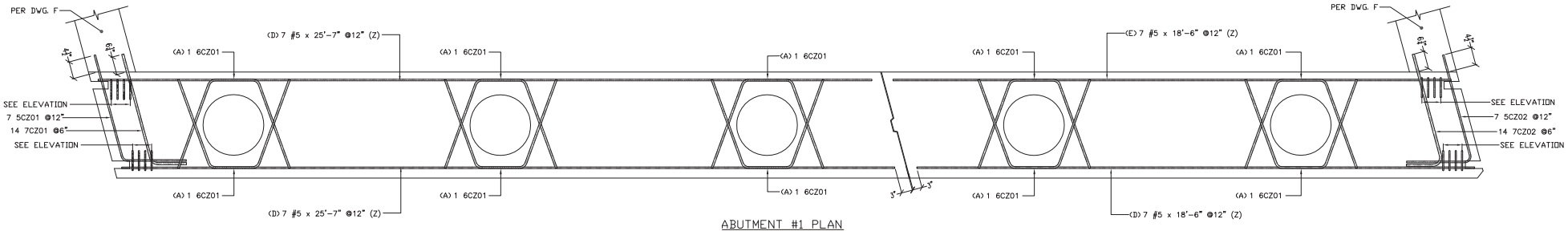

ABUTMENT #1 PLAN
VERTICALS NOT SHOW FOR CLARITY

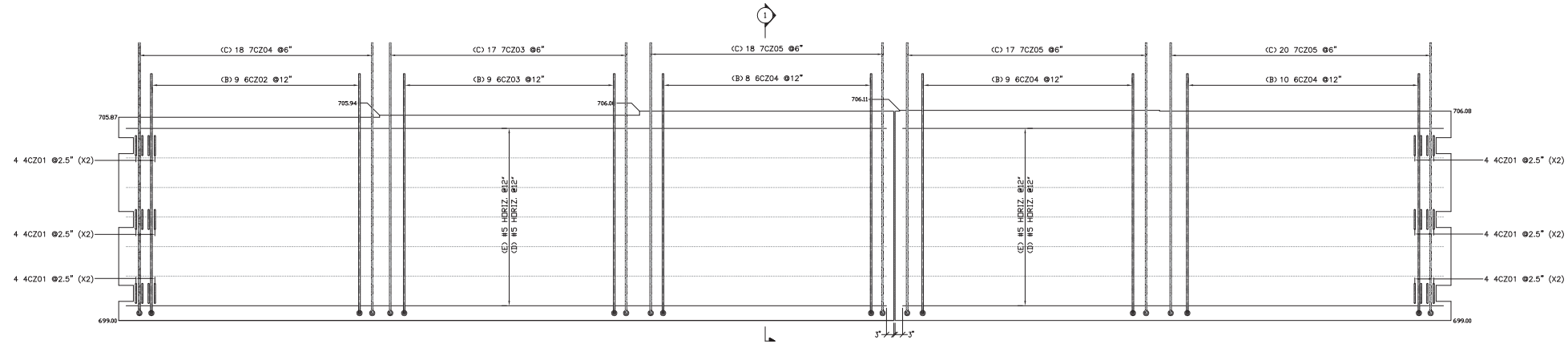

ABUTMENT #1 ELEVATION
PILES, PILE CAVITIES AND POST TENSIONING
DUCKS NOT SHOWN FOR CLARITY

FOR APPROVAL

(2) 5'-0" LONG SAMPLE BARS WILL BE PROVIDED FOR EACH BAR SIZE

ALL DUAL COATED REINF. DENOTED (Z)

ELEVATIONS & DIMENSIONS SHOWN ON THIS DWG. ARE FOR REINF. DETAILING PURPOSES ONLY AND ARE NOT INTENDED FOR CONSTRUCTION.

REINF. BARS ASTM A615 GRADE 60 DUAL COATED

VERIFICATION OF UNCLEAR INFORMATION MAY BE REQUESTED ON THIS DRAWING. SHOULD VERIFICATION BE LEFT UN-ADDRESSED IT WILL REMAIN AS SHOWN AND ASSUME TO BE CORRECT.

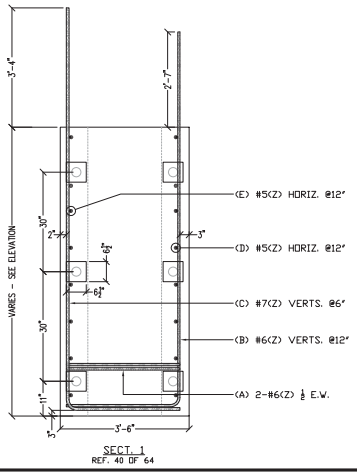

SECT. 1
REF. 40 OF 64

Release Number: 003							BAR LIST									
Bar Mark	Qty	Size	Total Length	Type	'A'	'B'	'C'	'D'	'E'	'F'	'G'	'H'	'J'	'K'	'O'	'R'
	14	#5	25'-7"			25'-7"										
	14	#5	18'-6"			18'-6"										
4CZ01	48	#4	4'-8"	L9	0'-4 ½"	0'-8"	0'-8"	0'-8"	0'-8"	0'-8"	0'-4 ½"					
5CZ01	7	#5	6'-11 ½"	3		3'-7 ½"	3 3'-4"					3'-2 ½"		0'-10 ¼"	4'-5 ¾"	
5CZ02	7	#5	6'-11 ½"	21			3'-7 ½"	3 3'-4"				3'-2 ½"		0'-10 ¼"		
6CZ01	10	#6	7'-9 ½"	3			3'-1 ¼"	1'-7"	3'-1 ¼"			2'-11"		1'-0 ¾"	3'-9 ¾"	
6CZ02	9	#6	12'-3"	17		3'-1"	9'-2"									
6CZ03	9	#6	12'-4"	17		3'-1"	9'-3"									
6CZ04	27	#6	12'-6"	17		3'-1"	9'-5"									
7CZ01	14	#7	4'-11 ¼"	3		3'-9 ¼"	1'-2"					1'-1 ½"		0'-3 ½"	4'-0 ¾"	
7CZ02	14	#7	4'-11 ¼"	21			3'-9"	1'-2 ¾"				1'-2 ½"		0'-2 ¾"		
7CZ03	17	#7	13'-1"	17		3'-1"	10'-0"									
7CZ04	18	#7	12'-11"	17		3'-1"	9'-10"									
7CZ05	55	#7	13'-3"	17		3'-1"	10'-2"									

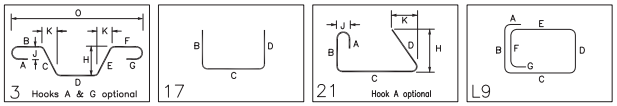

LEGEND:
CONT.-CONTINUOUS
TRANS.-TRANSVERSE
DWLS.-DOWELS
VERTS.-VERTICAL
HORIZ.-HORIZONTAL
T&B -TOP & BOTTOM
I.F.-INNER FACE
O.F.-OUTER FACE
E.E.-EACH END
E.F.-EACH FACE
F.F.-FRONT FACE
R.F.-REAR FACE
E.W.-EACH WAY
O.C.-ON CENTER
L.W.-LONG WAY
S.W.-SHORT WAY

6			
5			
4			
3	01-12-15	3	REVISE/ENG. COM/FOR APPROVAL
2	12-05-14		REVISE/SDI COM/FOR APPROVAL
1	12-03-14		FOR APPROVAL
	DATE	REV.#	SENT FOR

DIMENSION
DIMENSION FABRICATORS INC.
2000 7TH STREET
SOUTH, N.Y. 12302
PH: (518) 374-1938
FAX (518) 374-4630
www.dimensionfabricators.com

STRUCTURE	VTAOT STOWE BRF 0235(11)
LOCATION	WILLINSTON, VT
ARCHITECT	
ENGINEER	
CUSTOMER	SD IRELAND CONCRETE CONST. CORP.
DRAWN BY ED	DATE 12/3/14
DRAWING #	C

DRAWING COVERS
ABUTMENT #1
DUAL COATED REINFORCING

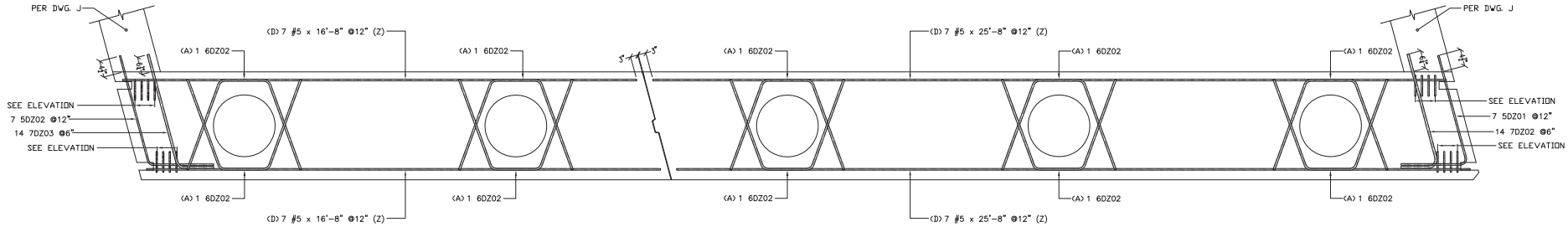

ABUTMENT #2 PLAN
VERTICALS NOT SHOW FOR CLARITY

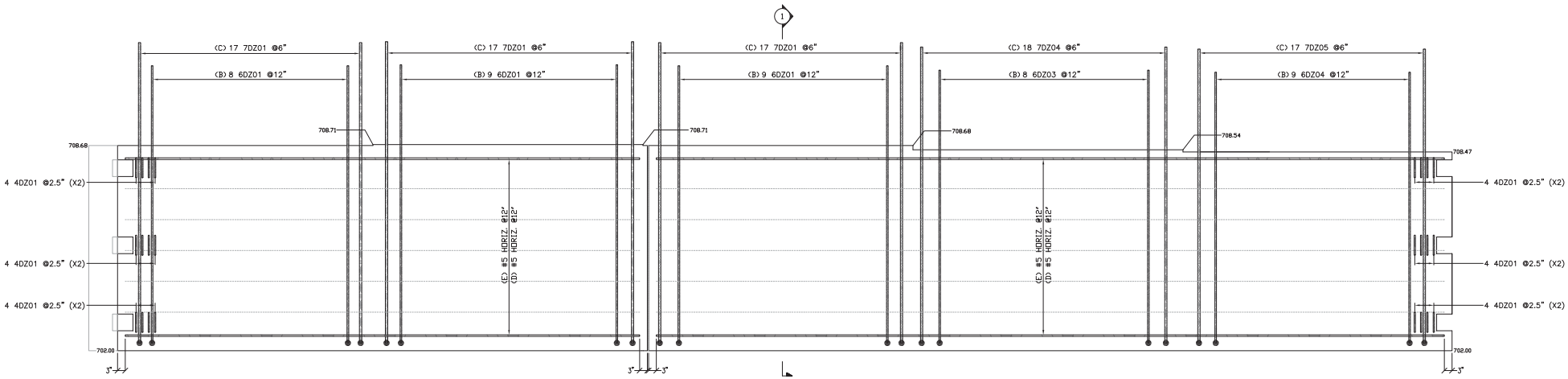

ABUTMENT #2 ELEVATION
PILES, PILE CAVITIES AND POST TENSIONING
DUCKS NOT SHOWN FOR CLARITY

FOR APPROVAL

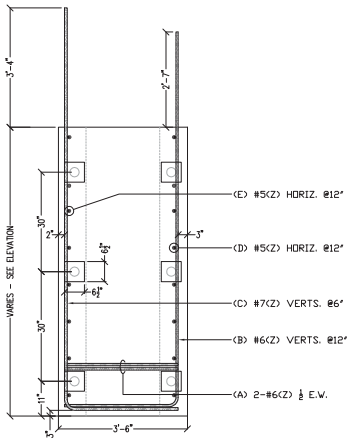

SECT 1
REF. 40 OF 64

⚠ (2) 5'-0" LONG SAMPLE BARS WILL BE PROVIDED FOR EACH BAR SIZE

Release Number: 004

BAR LIST

Bar Mark	Qty	Size	Total Length	Type	'A'	'B'	'C'	'D'	'E'	'F'	'G'	'H'	'J'	'K'	'O'	'R'
	14	#5	16'-8"			16'-8"										
	14	#5	25'-8"			25'-8"										
4DZ01	48	#4	4'-8"	L9	0'-4 ½"	0'-8"	0'-8"	0'-8"	0'-8"	0'-8"	0'-4 ½"					
5DZ01	7	#5	6'-11 ½"	21			3'-7 ½"	⚠ 3'-4"				3'-2 ½"		0'-10 ¼"		
5DZ02	7	#5	6'-11 ½"	3		3'-7 ½"	⚠ 3'-4"					3'-2 ½"		0'-10 ¼"	4'-5 ¾"	
6DZ01	26	#6	12'-1"	17		3'-1"	9'-0"									
6DZ02	10	#6	7'-9 ½"	3			3'-1 ¼"	1'-7"	3'-1 ¼"			2'-11"		1'-0 ¾"	3'-9 ¾"	
6DZ03	8	#6	11'-11"	17		3'-1"	8'-10"									
6DZ04	9	#6	11'-10"	17		3'-1"	8'-9"									
7DZ01	51	#7	12'-10"	17		3'-1"	9'-9"									
7DZ02	14	#7	4'-11 ¾"	21			3'-9"	1'-2 ¾"				1'-2 ½"		0'-2 ¾"		
7DZ03	14	#7	4'-11 ¼"	3		3'-9 ¼"	1'-2"					1'-1 ½"		0'-3 ½"	4'-0 ¾"	
7DZ04	18	#7	12'-8"	17		3'-1"	9'-7"									
7DZ05	17	#7	12'-7"	17		3'-1"	9'-6"									

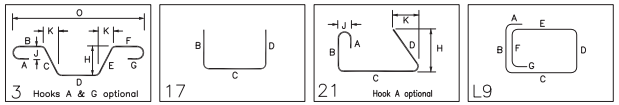

ALL DUAL COATED REINF. DENOTED (Z)

ELEVATIONS & DIMENSIONS SHOWN ON THIS DWG. ARE FOR REINF. DETAILING PURPOSES ONLY AND ARE NOT INTENDED FOR CONSTRUCTION.

REINF. BARS ASTM A615 GRADE 60 DUAL COATED

VERIFICATION OF UNCLEAR INFORMATION MAY BE REQUESTED ON THIS DRAWING. SHOULD VERIFICATION BE LEFT UN-ADDRESSED IT WILL REMAIN AS SHOWN AND ASSUME TO BE CORRECT.

LEGEND:
CONT.-CONTINUOUS
TRANS.-TRANSVERSE
DWLS.-DOWELS
VERTS.-VERTICAL
HORIZ.-HORIZONTAL
T&B -TOP & BOTTOM
I.F.-INNER FACE
O.F.-OUTER FACE
E.E.-EACH END
E.F.-EACH FACE
F.F.-FRONT FACE
R.F.-REAR FACE
E.W.-EACH WAY
O.C.-ON CENTER
L.W.-LONG WAY
S.W.-SHORT WAY

6			
5			
4			
3			
2	01-12-15	⚠	REVISED/ENG COM/FOR APPROVAL
1	12-04-14		FOR APPROVAL
	DATE	REV.#	SENT FOR

DIMENSION
DIMENSION FABRICATORS INC.
2000 7TH STREET
SCOTIA, N.Y. 12302
PH. (518) 374-1938
FAX (518) 375-6630
www.dimensionfabricators.com

STRUCTURE: VTAOT STOWE BRF 0235(11)
LOCATION:
ARCHITECT:
ENGINEER:
CUSTOMER: SD IRELAND CONCRETE CONST. CORP.
DRAWN BY: ED
DATE: 12/4/14
DFI #: 9117
DRAWING COVERS: ABUTMENT #2 DUAL COATED REINFORCING
DRAWING #: D

Release Number:

BAR LIST

Bar Mark	Qty	Size	Total Length	Type	'A'	'B'	'C'	'D'	'E'	'F'	'G'	'H'	'J'	'K'	'O'	'R'
	7	#5	5'-5"			5'-5"										
	1	#5	8'-7"			8'-7"										
5FZ01	34	#5	2'-0"	T11	0'-5 ½"	1'-1"					0'-5 ½"					
5FZ02	12	#5	9'-5 ½"	21			9'-0"	0'-5 ½"				0'-4"		0'-3 ¾"		
5FZ03a	1	#5	2'-8"			2'-8"										
5FZ03b	1	#5	3'-11"			3'-11"										
5FZ03c	1	#5	5'-3"			5'-3"										
5FZ03d	1	#5	6'-6"			6'-6"										
5FZ03e	1	#5	7'-10"			7'-10"										
5FZ04	4	#5	9'-3 ½"	21			8'-10"	0'-5 ½"				0'-4"		0'-3 ¾"		
5FZ05	1	#5	10'-7"	3		9'-2"	1'-5"					0'-10 ½"		1'-1 ¼"	10'-3 ¼"	
5FZ06a	2	#5	3'-9 ½"	21			3'-4"	0'-5 ½"				0'-4"		0'-3 ¾"		
5FZ06b	2	#5	4'-5 ½"	21			4'-0"	0'-5 ½"				0'-4"		0'-3 ¾"		
5FZ06c	2	#5	5'-1 ½"	21			4'-8"	0'-5 ½"				0'-4"		0'-3 ¾"		
5FZ06d	2	#5	5'-9 ½"	21			5'-4"	0'-5 ½"				0'-4"		0'-3 ¾"		
5FZ06e	2	#5	6'-5 ½"	21			6'-0"	0'-5 ½"				0'-4"		0'-3 ¾"		
5FZ06f	2	#5	7'-1 ½"	21			6'-8"	0'-5 ½"				0'-4"		0'-3 ¾"		
5FZ06g	2	#5	7'-9 ½"	21			7'-4"	0'-5 ½"				0'-4"		0'-3 ¾"		
5FZ06h	2	#5	8'-5 ½"	21			8'-0"	0'-5 ½"				0'-4"		0'-3 ¾"		
	14	#7	5'-0"			5'-0"										
	2	#7	8'-8"			8'-8"										
7FZ01a	1	#7	2'-0"			2'-0"										
7FZ01b	1	#7	2'-7"			2'-7"										
7FZ01c	1	#7	3'-3"			3'-3"										
7FZ01d	1	#7	3'-10"			3'-10"										
7FZ01e	1	#7	4'-6"			4'-6"										
7FZ01f	1	#7	5'-2"			5'-2"										
7FZ01g	1	#7	5'-9"			5'-9"										
7FZ01h	1	#7	6'-5"			6'-5"										
7FZ01i	1	#7	7'-0"			7'-0"										
7FZ01j	1	#7	7'-8"			7'-8"										
7FZ01k	1	#7	8'-4"			8'-4"										
7FZ02	1	#7	10'-8"	3		9'-5"	1'-3"					0'-9 ¼"		0'-11 ¾"	10'-4 ¾"	

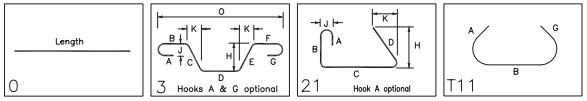

⚠ *BAR MARKS MAY CHANGE DUE TO REVISIONS

⚠ (2) 5'-0" LONG SAMPLE BARS WILL BE PROVIDED FOR EACH BAR SIZE

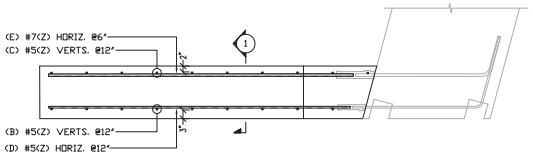

WINGWALL #2 PLAN

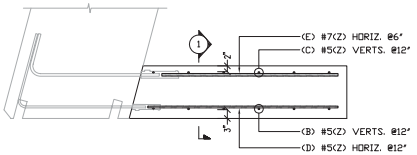

WINGWALL #1 PLAN

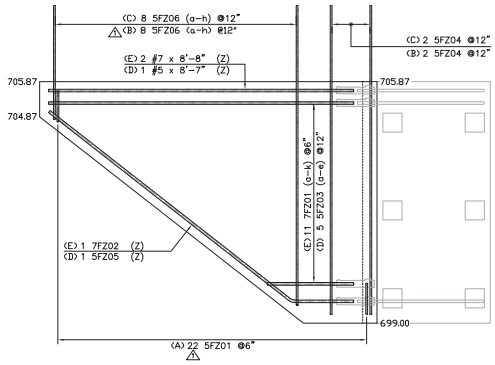

WINGWALL #2 ELEVATION

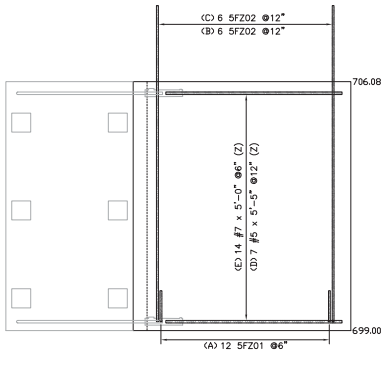

WINGWALL #1 ELEVATION

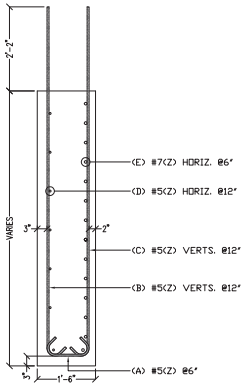

SECT. 1
REF. 42 OF 64

ALL DUAL COATED REINF. DENOTED (Z)

ELEVATIONS & DIMENSIONS SHOWN ON THIS DWG. ARE FOR REINF. DETAILING PURPOSES ONLY AND ARE NOT INTENDED FOR CONSTRUCTION.

REINF. BARS ASTM A615 GRADE 60 DUAL COATED

VERIFICATION OF UNCLEAR INFORMATION MAY BE REQUESTED ON THIS DRAWING. SHOULD VERIFICATION BE LEFT UN-ADDRESSED IT WILL REMAIN AS SHOWN AND ASSUME TO BE CORRECT.

FOR APPROVAL

LEGEND:
CONT.-CONTINUOUS
TRANS.-TRANSVERSE
DWL.S.-DOWELS
VERTS.-VERTICAL
HORIZ.-HORIZONTAL
T&B -TOP & BOTTOM
I.F.-INNER FACE
O.F.-OUTER FACE
E.E.-EACH END
E.F.-EACH FACE
F.F.-FRONT FACE
R.F.-REAR FACE
E.W.-EACH WAY
O.C.-ON CENTER
L.W.-LONG WAY
S.W.-SHORT WAY

DATE	REV.#	SENT FOR
6		
5		
4		
3		
2	01-12-15	⚠ REVISED/SDX COM/FOR APPROVAL
1	12-05-14	FOR APPROVAL

DIMENSION
DIMENSION FABRICATORS INC.
2000 7TH STREET
SCOTIA, N.Y. 12302
PH. (518) 374-1836
FAX (518) 374-1830
www.dimensionfabricators.com

STRUCTURE: VTAOT STOWE BRF 0235(11)
LOCATION:
ARCHITECT:
ENGINEER:
CUSTOMER: SD IRELAND CONCRETE CONST. CORP.
DRAWN BY: ED
DATE: 12/5/14
DFI #: 9117
DRAWING COVERS: WINGWALLS 1 & 2 DUAL COATED REINFORCING
DRAWING #: F

Drawing Sheet : J — ⚠ BAR LIST

Bar Mark	Qty	Size	Total Length	Type	'A'	'B'	'C'	'D'	'E'	'F'	'G'	'H'	'J'	'K'	'O'	'R'
	2	#7	8'-8"			8'-8"										
	2	#7	8'-8"			8'-8"										
	1	#5	8'-7"			8'-7"										
	1	#5	8'-7"			8'-7"										
5JZ01	⚠ 43	#5	2'-0"	T11	0'-5 ½"	1'-1"					0'-5 ½"					
5JZ02	1	#5	10'-5"	3		9'-1"	1'-4"					0'-9 ½"		1'-0 ½"	10'-1 ½"	
5JZ03	4	#5	9'-0 ½"	21			8'-7"	0'-5 ½"				0'-4"		0'-3 ½"		
5JZ04a	1	#5	2'-8"			2'-8"										
5JZ04b	1	#5	4'-0"			4'-0"										
5JZ04c	1	#5	5'-4"			5'-4"										
5JZ04d	1	#5	6'-8"			6'-8"										
5JZ04e	1	#5	8'-0"			8'-0"										
5JZ05a	2	#5	3'-6 ½"	21			3'-1"	0'-5 ½"				0'-4"		0'-3 ½"		
5JZ05b	2	#5	4'-3 ½"	21			3'-10"	0'-5 ½"				0'-4"		0'-3 ½"		
5JZ05c	2	#5	5'-0 ½"	21			4'-7"	0'-5 ½"				0'-4"		0'-3 ½"		
5JZ05d	2	#5	5'-9 ½"	21			5'-4"	0'-5 ½"				0'-4"		0'-3 ½"		
5JZ05e	2	#5	6'-6 ½"	21			6'-1"	0'-5 ½"				0'-4"		0'-3 ½"		
5JZ05f	2	#5	7'-3 ½"	21			6'-10"	0'-5 ½"				0'-4"		0'-3 ½"		
5JZ05g	2	#5	8'-0 ½"	21			7'-7"	0'-5 ½"				0'-4"		0'-3 ½"		
5JZ05h	2	#5	8'-9 ½"	21			8'-4"	0'-5 ½"				0'-4"		0'-3 ½"		
5JZ06a	1	#5	3'-2"			3'-2"										
5JZ06b	1	#5	4'-5"			4'-5"										
5JZ06c	1	#5	5'-8"			5'-8"										
5JZ06d	1	#5	6'-11"			6'-11"										
5JZ06e	1	#5	8'-2"			8'-2"										
5JZ07	1	#5	10'-6"	3		8'-7"	1'-11"					1'-2 ½"		1'-5 ½"	10'-0 ½"	
5JZ08	4	#5	8'-10 ½"	21			8'-5"	0'-5 ½"				0'-4"		0'-3 ½"		
5JZ09a	2	#5	3'-6 ½"	21			3'-1"	0'-5 ½"				0'-4"		0'-3 ½"		
5JZ09b	2	#5	4'-2 ½"	21			3'-9 ½"	0'-5 ½"				0'-4"		0'-3 ½"		
5JZ09c	2	#5	4'-11"	21			4'-5 ½"	0'-5 ½"				0'-4"		0'-3 ½"		
5JZ09d	2	#5	5'-7 ½"	21			5'-1 ½"	0'-5 ½"				0'-4"		0'-3 ½"		
5JZ09e	2	#5	6'-3 ½"	21			5'-10"	0'-5 ½"				0'-4"		0'-3 ½"		
5JZ09f	2	#5	6'-11 ½"	21			6'-6 ½"	0'-5 ½"				0'-4"		0'-3 ½"		
5JZ09g	2	#5	7'-8"	21			7'-2 ½"	0'-5 ½"				0'-4"		0'-3 ½"		
5JZ09h	2	#5	8'-4 ½"	21			7'-11"	0'-5 ½"				0'-4"		0'-3 ½"		
7JZ01	1	#7	10'-6"	3		9'-1"	1'-5"					0'-10 ½"		1'-1 ½"	10'-2 ½"	

Drawing Sheet : J — BAR LIST

Bar Mark	Qty	Size	Total Length	Type	'A'	'B'	'C'	'D'	'E'	'F'	'G'	'H'	'J'	'K'	'O'	'R'
7JZ02a	1	#7	2'-1"			2'-1"										
7JZ02b	1	#7	2'-9"			2'-9"										
7JZ02c	1	#7	3'-5"			3'-5"										
7JZ02d	1	#7	4'-1"			4'-1"										
7JZ02e	1	#7	4'-9"			4'-9"										
7JZ02f	1	#7	5'-5"			5'-5"										
7JZ02g	1	#7	6'-1"			6'-1"										
7JZ02h	1	#7	6'-9"			6'-9"										
7JZ02i	1	#7	7'-5"			7'-5"										
7JZ02j	1	#7	8'-1"			8'-1"										
7JZ03a	1	#7	2'-7"			2'-7"										
7JZ03b	1	#7	3'-2"			3'-2"										
7JZ03c	1	#7	3'-10"			3'-10"										
7JZ03d	1	#7	4'-5"			4'-5"										
7JZ03e	1	#7	5'-1"			5'-1"										
7JZ03f	1	#7	5'-8"			5'-8"										
7JZ03g	1	#7	6'-4"			6'-4"										
7JZ03h	1	#7	6'-11"			6'-11"										
7JZ03i	1	#7	7'-7"			7'-7"										
7JZ03j	1	#7	8'-3"			8'-3"										
7JZ04	1	#7	10'-7"	3		8'-7"	2'-0"					1'-3"		1'-6 ½"	10'-1 ½"	

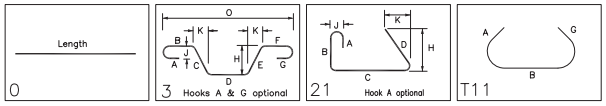

⚠ ※BAR MARKS MAY CHANGE DUE TO REVISIONS

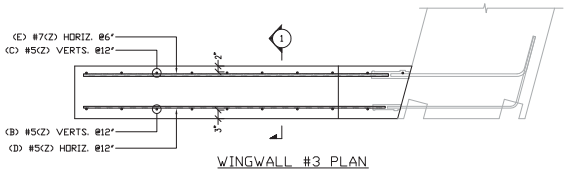

WINGWALL #3 PLAN

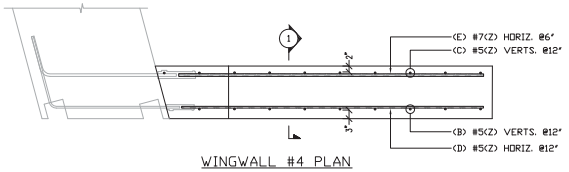

WINGWALL #4 PLAN

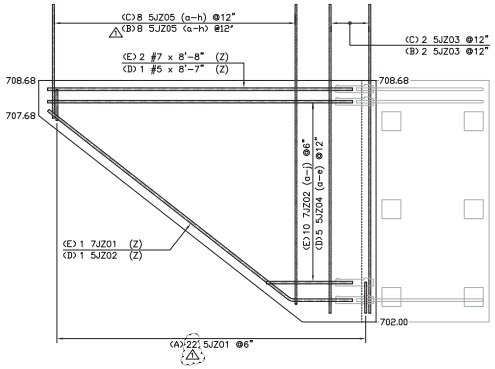

WINGWALL #3 ELEVATION

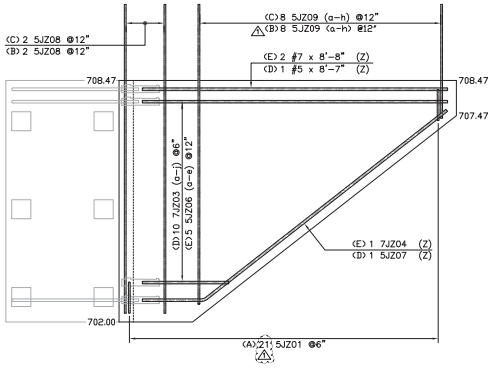

WINGWALL #4 ELEVATION

⚠ (2) 5'-0" LONG SAMPLE BARS WILL BE PROVIDED FOR EACH BAR SIZE

ALL DUAL COATED REINF. DENOTED (Z)

ELEVATIONS & DIMENSIONS SHOWN ON THIS DWG. ARE FOR REINF. DETAILING PURPOSES ONLY AND ARE NOT INTENDED FOR CONSTRUCTION.

REINF. BARS ASTM A615 GRADE 60 DUAL COATED

VERIFICATION OF UNCLEAR INFORMATION MAY BE REQUESTED ON THIS DRAWING. SHOULD VERIFICATION BE LEFT UN-ADDRESSED IT WILL REMAIN AS SHOWN AND ASSUME TO BE CORRECT.

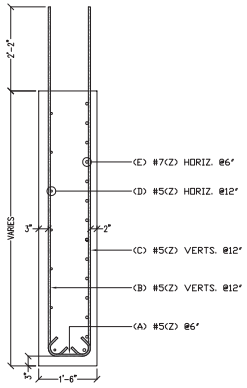

SECT. 1
REF. 42 OF 64

FOR APPROVAL

LEGEND:
CONT.-CONTINUOUS
TRANS.-TRANSVERSE
DWLS.-DOWELS
VERTS.-VERTICAL
HORIZ.-HORIZONTAL
T&B -TOP & BOTTOM
I.F.-INNER FACE
O.F.-OUTER FACE
E.E.-EACH END
E.F.-EACH FACE
F.F.-FRONT FACE
R.F.-REAR FACE
E.W.-EACH WAY
O.C.-ON CENTER
L.W.-LONG WAY
S.W.-SHORT WAY

6			
5			
4			
3			
2	1/12/15	⚠	REVISED/SDX COM/FOR APPROVAL
1	12-05-14		FOR APPROVAL
DATE		REV.#	SENT FOR

DIMENSION
DIMENSION FABRICATORS INC.
2000 7TH STREET
SCOTIA, N.Y. 12302
PH: (518) 374-1836
FAX (518) 374-1830
www.dimensionfabricators.com

STRUCTURE	VTAOT STOWE BRF 0235(11)
LOCATION	
ARCHITECT	
ENGINEER	
CUSTOMER	SD IRELAND CONCRETE CONST. CORP.
DRAWN BY ED	DATE 12/5/14
DFI #	9117
DRAWING COVERS	WINGWALLS 3 & 4 DUAL COATED REINFORCING
DRAWING #	J

Drawing Sheet : K					BAR LIST											
Bar Mark	Qty	Size	Total Length	Type	'A'	'B'	'C'	'D'	'E'	'F'	'G'	'H'	'J'	'K'	'O'	'R'
4KZ01	8	#4	6'-6 ½"	25		1'-6"	1'-0 ¼"	1'-6"	1'-0 ¼"	1'-6"		1'-0"		0'-6"		
	30	#5	17'-6"			17'-6"										
	38	#5	7'-0"			7'-0"										
	38	#5	6'-4"			6'-4"										
5KZ01	38	#5	2'-10"	17		0'-10"	2'-0"									
5KZ02	19	#5	5'-4"	17		2'-2"	1'-0"	2'-2"								

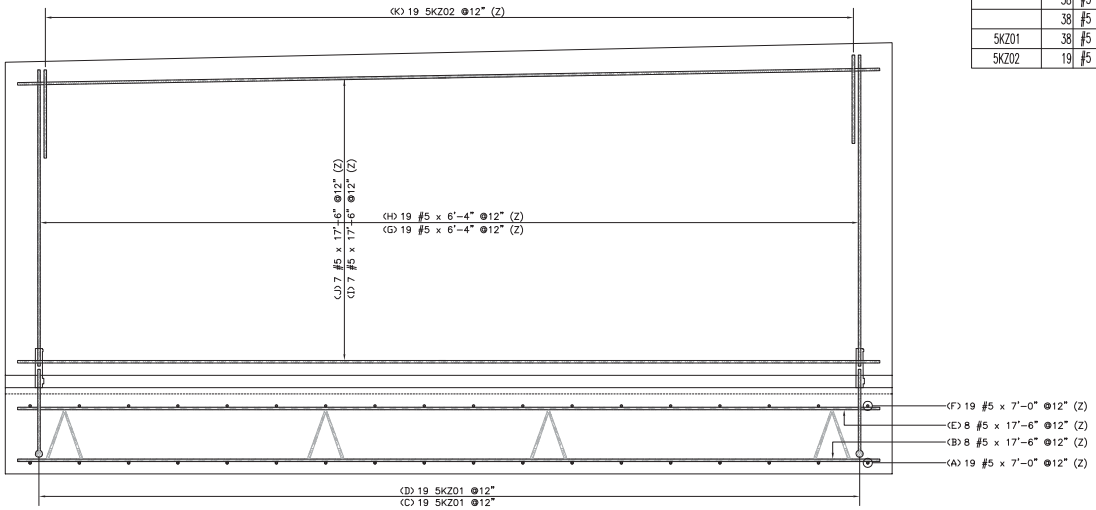

RETAINING WALL ELEVATION

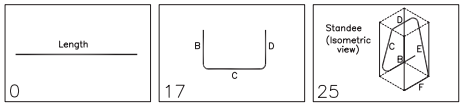

(2) 5'-0" LONG SAMPLE BARS WILL BE PROVIDED FOR EACH BAR SIZE

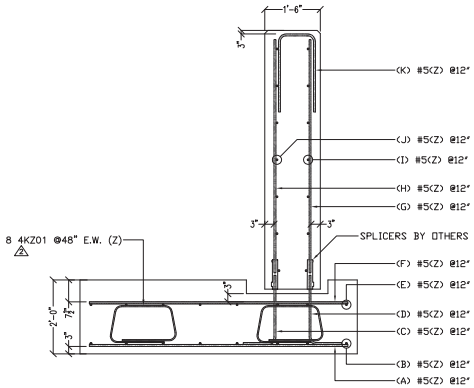

SECT. 1
REF. 0/S-0

ALL DUAL COATED REINF. DENOTED (Z)

ELEVATIONS & DIMENSIONS SHOWN ON THIS DWG. ARE FOR REINF. DETAILING PURPOSES ONLY AND ARE NOT INTENDED FOR CONSTRUCTION.

REINF. BARS ASTM A615 GRADE 60 DUAL COATED

VERIFICATION OF UNCLEAR INFORMATION MAY BE REQUESTED ON THIS DRAWING. SHOULD VERIFICATION BE LEFT UN-ADDRESSED IT WILL REMAIN AS SHOWN AND ASSUME TO BE CORRECT.

FOR FIELD USE

LEGEND:
CONT.-CONTINUOUS
TRANS.-TRANSVERSE
DWLS.-DOWELS
VERTS.-VERTICAL
HORIZ.-HORIZONTAL
T&B -TOP & BOTTOM
I.F.-INNER FACE
O.F.-OUTER FACE
E.E.-EACH END
E.F.-EACH FACE
F.F.-FRONT FACE
R.F.-REAR FACE
E.W.-EACH WAY
O.C.-ON CENTER
L.W.-LONG WAY
S.W.-SHORT WAY

	DATE	REV.#	SENT FOR
6			
5			
4	01-12-15	2	DFI REVIEWED/FOR FIELD USE
3	12-30-14		APPROVED
2	12-8-14		REVISED/SOI COM/FOR APPROVAL
1	12-8-14		FOR APPROVAL

DIMENSION
DIMENSION FABRICATORS INC.
2000 7TH STREET
SCOTIA, N.Y. 12302
PH: (518) 374-1936
FAX (518) 374-4830
www.dimensionfabricators.com

STRUCTURE	VTAOT STOWE BRF 0235(11)
LOCATION	WILLISTON, VT
ARCHITECT	
ENGINEER	
CUSTOMER	SD IRELAND CONCRETE CONST. CORP.
DRAWN BY	ED
DATE	12/8/14
DR #	9117
DRAWING COVERS	RETAINING WALL DUAL COATED REINFORCING
DRAWING #	K

S.D. Ireland
Concrete Construction Corporation
802-863-6222 • Fax: 802-860-1528
www.sdireland.com

CONCRETE MIX DESIGN

6,000 psi mix will be used for higher, early strength

6000 psi

SCC

SDI MIX CODE: P60TER

DATE: March 28, 2014 **PLANT:** Burlington/Williston, VT

PROJECT: **General DOT Precast - 2014**

FINE AGGREGATE:
ASTM C 33

Source:	Hinesburg Sand & Gravel
Specific Gravity:	2.67 (Abs.: 1.3%)
Fineness Modulus:	≥ 2.6

COARSE AGGREGATE:
ASTM C 33

Source:	S.D. Ireland, Brownell Quarry
Specific Gravity:	2.80 (Abs.: 0.30%)
Description	3/4" 100% Crushed Stone (Size #67)

CEMENT: Ternary Blend Cement; Lefarge North America Lakes and Seaway Re St. Constant, Quebec (Sp. Gvty. 3.02)

ADMIXTURES: Water Reducer (HRWR): Glenium 7500; BASF
Air Entraining Agent: Darex II AEA; Grace Concrete Chemicals

CONSTITUENTS (LBS. /YD³)

		Abs.Vol.
Coarse Aggregate (SSD)	1750	10.02
Fine Aggregate (SSD)	1017	6.10
Cement	800	4.25
Water	304.6	4.88
Air Content (Entrained)	6.5%	1.75
Total	3872	27.00ft³

MIX PROPERTIES

Water Cement Ratios: 0.38
Entrained Air Content: 5.0 % – 9.0%
Dry Unit Weight: 144.2 ± pcf
Spread: 20" to 28"
VSI ≤ 1

***ADMIXTURE(S) DOSEAGE (OZ. /YD³)**

Glenium 7500 (HRWR)	56 - 64
Darex II AEA	2.8

Approved by James Wild, VAOT Composite Materials Engineer 7/17/14

*Admixture dosage rates are subject to change.

BREAK HISTORY±

24-HR.	3400 PSI
7-DAYS	6000 PSI
28-DAYS	6700 PSI

STOWE VT

11/21/14
WFD

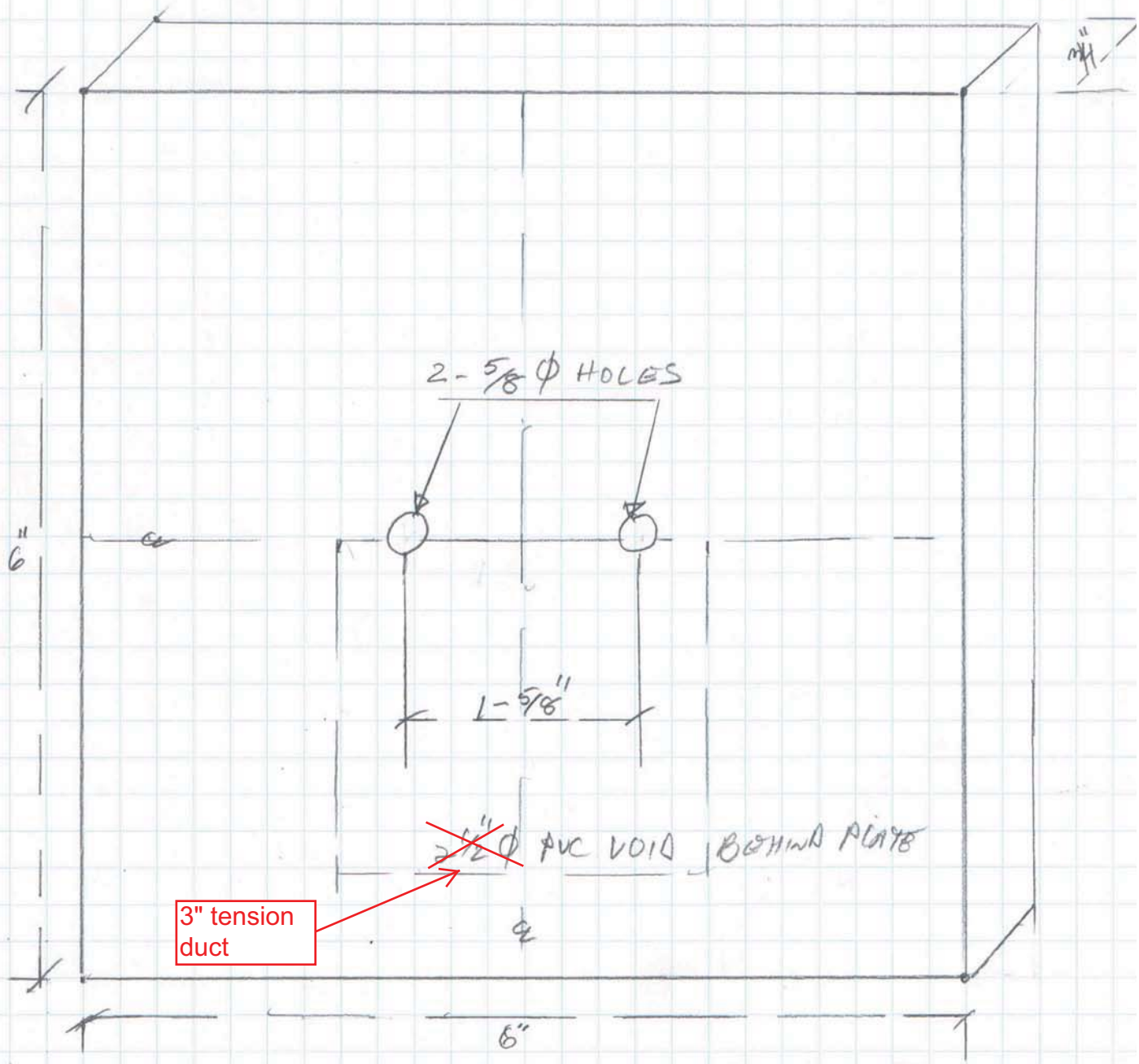

6" x 6" x 3/4" GALVANIZED PLATE @ 2-5/8" ϕ HOLES

INSERTS

NMB SPLICE SLEEVE - U-X SERIES

The NMB SPLICE-SLEEVE is a mechanical coupler for splicing reinforcing bars which uses a cylindrical shaped steel sleeve filled with a Portland cement based non-shrink high early strength grout. Reinforcing bars to be spliced are inserted into the sleeve to meet approximately at the center of the sleeve. The interior of the sleeve is then filled with SS MORTAR grout.

- *System develops the tensile and compressive strengths in excess of the specified minimum for ASTM A615 and A706, Grade 60 bars conforming to the latest ACI 318 Building Code Requirements.*
- *Exceeds requirements of:*
  - Type 1 connection - 125% of grade 60 rebar
  - Type 2 connection - 150% of grade 60 rebar
- *Sleeve iron castings conform to proprietary specification based on ASTM A536-84*
- *SS Mortar meets the requirements for use in the sleeves under ICC-ESR 3433 and is required for use in NMB Splice Sleeve System*
- *Standard finish is plain. Zinc or epoxy coated available.*

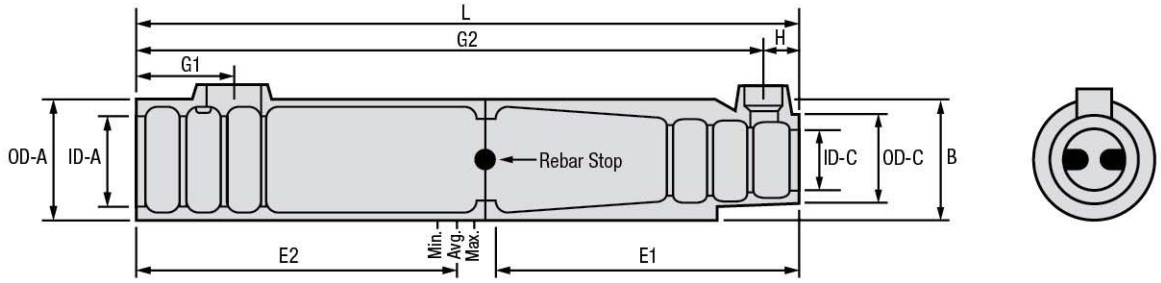

DIMENSIONS			Narrow End Diameter			Wide End Diameter		Grout Port Locations			
ALP Part #	Grade 60 Rebar Size	Sleeve Length L	ID-C	OD-C	Max Diameter B	ID-A	OD-A	G1	G2	H	Weight per sleeve (lbs)
SS 5U-X	#5	9-5/8"	7/8"	1-1/2"	1-7/8"	1-1/4"	1-7/8"	1-7/8"	8-3/4"	7/8"	3.09
SS 6U-X	#6	11-1/4"	1"	1-5/8"	2"	1-3/8"	2"	1-7/8"	10-3/8"	7/8"	3.70
SS 7U-X	#7	12-3/4"	1-1/8"	1-3/4"	2-3/8"	1-3/4"	2-3/8"	1-7/8"	11-7/8"	7/8"	5.10
SS 8U-X	#8	14-5/8"	1-1/4"	1-7/8"	2-1/2"	1-7/8"	2-1/2"	1-7/8"	13-5/8"	7/8"	5.86
SS 9U-X	#9	16-3/8"	1-3/8"	2"	2-5/8"	2"	2-5/8"	1-7/8"	15-1/2"	7/8"	7.21
SS 10U-X	#10	17-7/8"	1-5/8"	2-1/4"	2-7/8"	2-1/8"	2-7/8"	1-7/8"	17"	7/8"	9.47
SS 11U-X	#11	19-1/2"	1-3/4"	2-3/8"	3"	2-3/8"	3"	1-7/8"	18-5/8"	7/8"	10.80
SS 14U-X	#14	24-3/8"	2"	2-3/4"	3-1/2"	2-5/8"	3-1/2"	1-7/8"	23-3/4"	7/8"	19.70
SS 18U	#18	36-1/4"	2-5/8"	3-5/8"	4-1/2"	3-1/4"	4-1/4"	2-5/8"	35-1/2"	5/8"	52.50

Each Splice Sleeve Set includes the following: sleeve, washer (GRW), hole seals (HS) and plug (RP).

SPECIFICATIONS		Recommended Rebar Embedment Length					
ALP Part #	Grade 60 Rebar size	Factory Dowel - E1		Field Dowel - E2			Total Tolerences
		Min.	Max	Min.	Average	Max	
SS 5U-X	#5	4-1/8"	4-3/8"	4-1/8"	4-1/2"	4-7/8"	5/8"
SS 6U-X	#6	4-7/8"	5-1/8"	4-7/8"	5-3/8"	5-3/4"	5/8"
SS 7U-X	#7	5-3/4"	5-7/8"	5-3/4"	6-1/8"	6-1/2"	7/8"
SS 8U-X	#8	6-1/2"	6-3/4"	6-1/2"	7"	7-1/2"	7/8"
SS 9U-X	#9	7-3/8"	7-1/2"	7-3/8"	7-7/8"	8-3/8"	7/8"
SS 10U-X	#10	8-1/4"	8-3/8"	8-1/4"	8-5/8"	9-1/8"	7/8"
SS 11U-X	#9*	9"	9-1/8"	9"	9-1/2"	9-7/8"	1-7/16"*
	#11	9"	9-1/8"	9"	9-1/2"	9-7/8"	7/8"
SS 14U-X	#11*	11-3/8"	11-5/8"	11-3/8"	11-7/8"	12-3/8"	1-7/16"*
	#14	11-3/8"	11-5/8"	11-3/8"	11-7/8"	12-3/8"	7/8"
SS 18U	#18	17"	18-1/8"	17"	17-1/2"	18-1/8"	1"

Each sleeve is included with a washer (GRW), hole seals (HS) and plug (RP).
* Tolerances listed are based upon up-sizing of the sleeve in relation to the rebar to increase the total tolerances.

PATTERSON
Your Single Source Supplier

NMB SPLICE SLEEVE - SNX11 & A11W

ELASTOMER PLUGS

Elastomer Plugs (EP) are designed to prevent the intrusion of concrete into the Splice Sleeve during the casting of the concrete elements.

ALP Part #	Fits ALP Part #	Grade 60 Rebar Size	Material	Color
SS E0911	SS SNX11	#9	Elastomer	Yellow
	SS A11W	#9	Elastomer	Yellow
SS E11	SS SNX11	#11	Elastomer	Black
	SS A11W	#11	Elastomer	Black

* (1) Elastomer Plug included with each Splice Sleeve

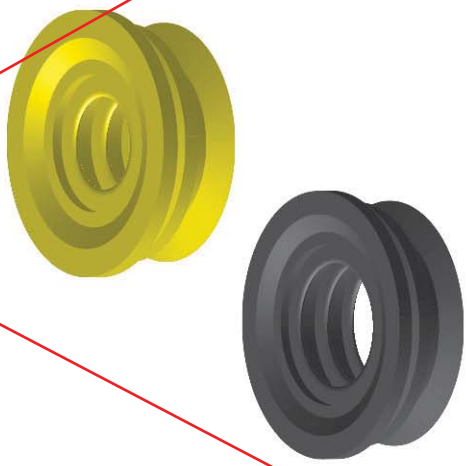

INLET AND OUTLET TUBES

Inlet / Outlet Tubes are designed to attach to the Splice Sleeve to create path for the grout to be pumped from the concrete surface in to the Splice Sleeve. Tubes are installed into the splice sleeve and capped with a hole seal before casting of the concrete panels.

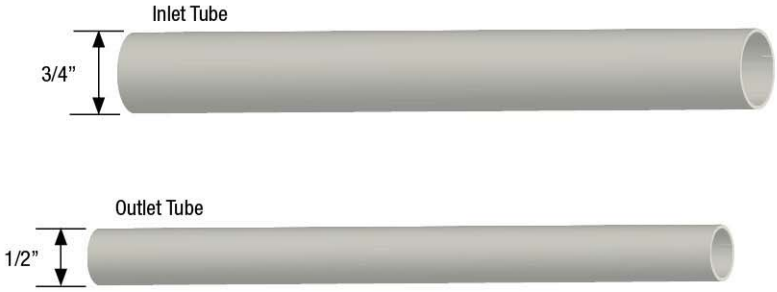

The intent of this cut sheet is to show that regardless of the size of the grout sleeve, all inlet tubes are 3/4" and all outlet tubes are 1/2". All tubes will be capped during production and shipping of precast pieces.

Grade 60 Rebar Size	Fits ALP Part #	Inlet PVC Tube	Outlet PVC Tube
#11	SS SNX11	3/4" Schedule 40 PVC Pipe*	1/2" Schedule 40 PVC Pipe*
	SS A11W		

* Not supplied by Splice Sleeve North America. Can be picked up at a local supplier.

HOLE SEALS

Hole Seals (HS) are plastic plugs designed to temporarily prevent intrusion of the concrete into PVC tube during casting of concrete elements.

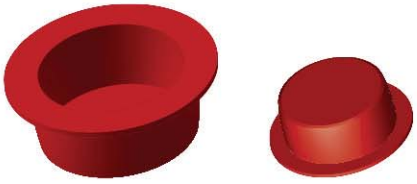

3/4" Inlet

1/2" Outlet

ALP Part #	PVC Pipe	Fits ALP Part #	Grade 60 Rebar Size
SS HSL	3/4"	SS SNX11	#11
		SS A11W	
	1/2"	SS SNX11	#11
		SS A11W	

*(1) Set of Hole Seals included with each Splice Sleeve
* Sold in sets of (1) 1/2" and (1) 3/4" Hole Seal

Telephone 215-855-8713 FAX 215-855-8714

GARY K. MUNKELT & ASSOCIATES

Consulting Engineers
Precast Concrete, Structural, Civil

1180 Welsh Rd. Suite 190 North Wales, PA 19454

PROJECT: **CHECK CAPACITY OF LIFT SYSTEM COMPONENTS TO LIFT PRECAST CONCRETE ABUTMENT, WINGWALL, RETAINING WALL**

CLIENT: **S.D. IRELAND**
WILLISTON, VT

LOCATION: **STOWE BRF 0235**
STOWE, VT

STATE OF VERMONT
GARY K. MUNKELT
NO. 6291
REGISTERED
PROFESSIONAL ENGINEER

1/8/15

TABLE OF CONTENTS

Title	Sheet
Abutment Lifting Detail	2
Wing Wall Lifting Detail	3
Retaining Wall Lifting Detail	4

Appendix A: Cable Components
Appendix B: Insert Components

Job No. 141228

Revised: 1/8/2015
Dated: 12/8/2014

SHEET 2

Abutment Lifting Detail

*AB1N Shown as it is the heaviest one.

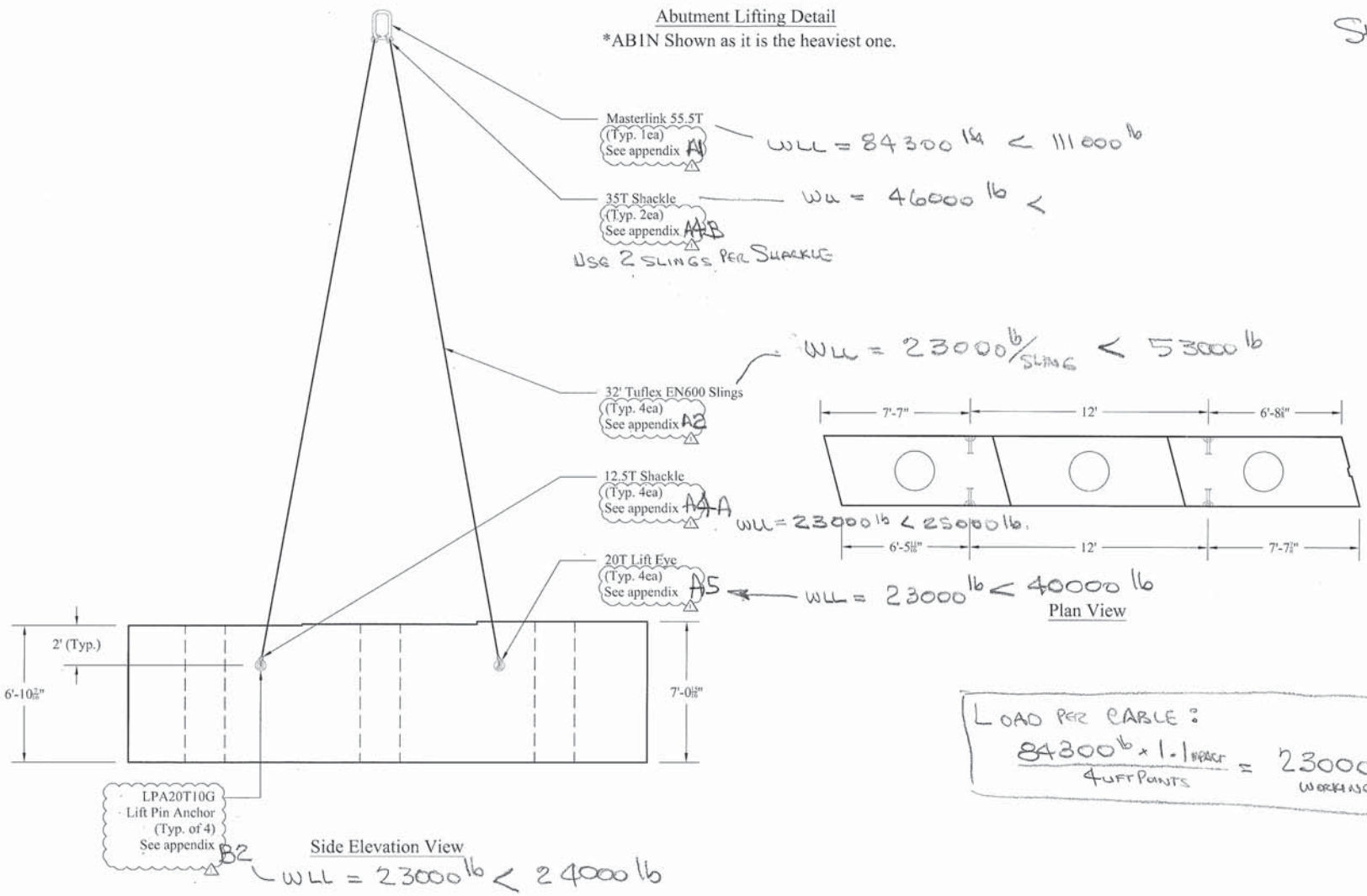

LOAD PER CABLE:

$$\frac{84300\text{ lb} \times 1.1\text{ IMPACT}}{4\text{ LIFT POINTS}} = 23000\text{ lb/LIFT POINT}$$

WORKING LOAD

Weight: 84,300 lbs

CONTRACTORS VTSPE:	Rev.	Date	By	Description
	1	1/7/15	PMT	Changes per review

PRECAST CONCRETE ABUTMENT SHOP DRAWINGS (SDI JOB #15163)

SUPERVISOR: M. WHEELER
DETAILER: I. ADAMS
CHECKER: E. Barendse
ENGINEER:

PROJECT NAME: Stowe BRF 0235 (II)
PROJECT #: 0235 (II)
LOCATION: Stowe, VT

INSTALLER: CCS Construction, 138 Munson Ave, Morrisville, VT 05661, PH: 802-888-7701

FABRICATOR: 193 INDUSTRIAL AVE. WILLISTON, VT 05495, Ph: (802) 658-0201

SD Ireland Precast Division

12/03/14 | Lifting | 1 of 3

Wing Wall Lifting Detail

*WW-2 Shown as this is the heaviest one.

From Appendix A1
WW = 9450 lb < 111000 lb

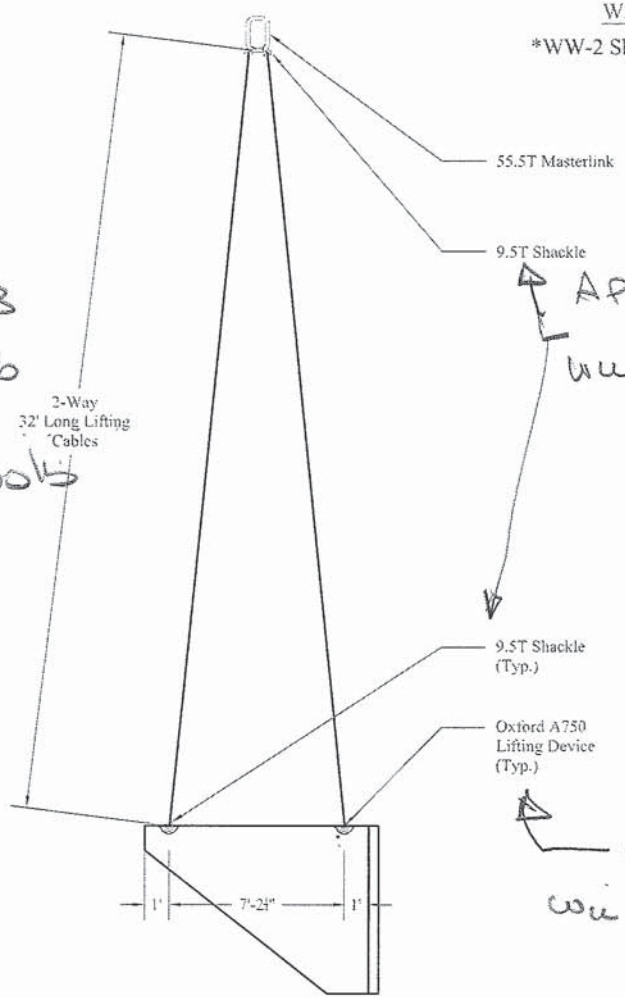

Side Elevation View

Appendix A3
WW = 9450 lb
< 19600 lb

Appendix A4A
WW = 5200 lb < 19000 lb

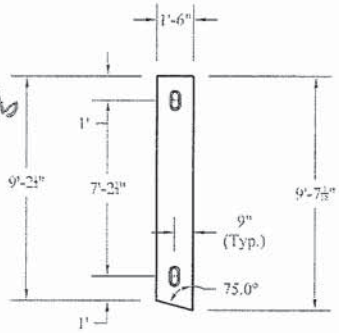

Plan View

Load Per Cable
$\frac{9450 \times 1.1}{2} = 5200$ lb

Appendix B1
WW = 5200 lb < 10000 lb

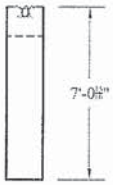

Section View

Sheet 2

Weight: 9.450 lbs

CONTRACTORS VISPE:	PRECAST CONCRETE ABUTMENT SHOP DRAWINGS (SDI JOB #15163)		INSTALLER:	FABRICATOR:	
	SUPERVISOR: M. WHEELER DETAILER: I. ADAMS CHECKER: E. Barendse ENGINEER:	PROJECT NAME: Stowe BRF 0235 (II) PROJECT #: 0235 (II) LOCATION: Stowe, VT	CCS Construction 138 Munson Ave Morrisville, VT 05661 Ph: 802-888-7701	193 INDUSTRIAL AVE. WILLISTON, VT 05495 Ph: (802) 658-0201	SD Ireland Precast Division
			12/03/14	Lifting	2 of 3

Retaining Wall Lifting Detail

LOAD PER CABLE

$$\frac{65700\ lb \times 1.1}{4} = 18100\ lb$$

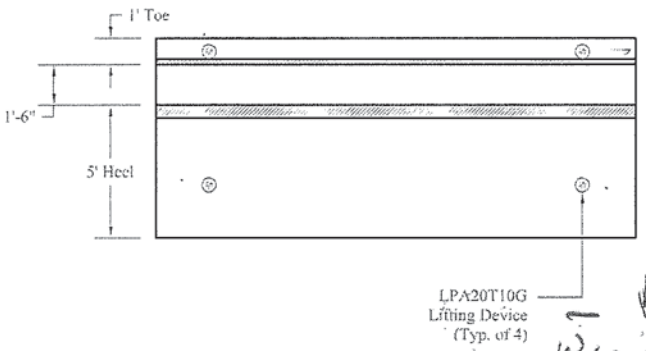

Plan View

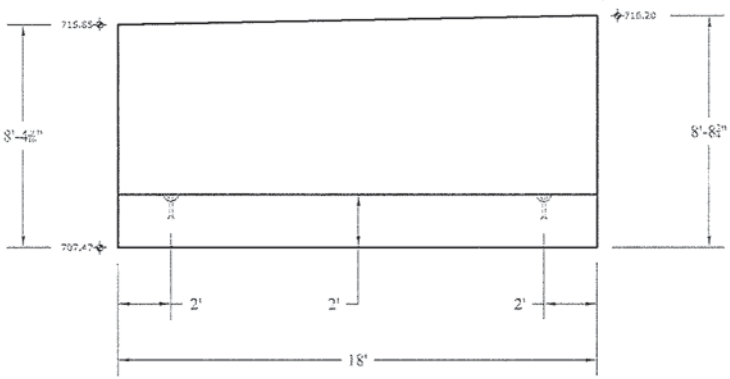

Side Elevation View

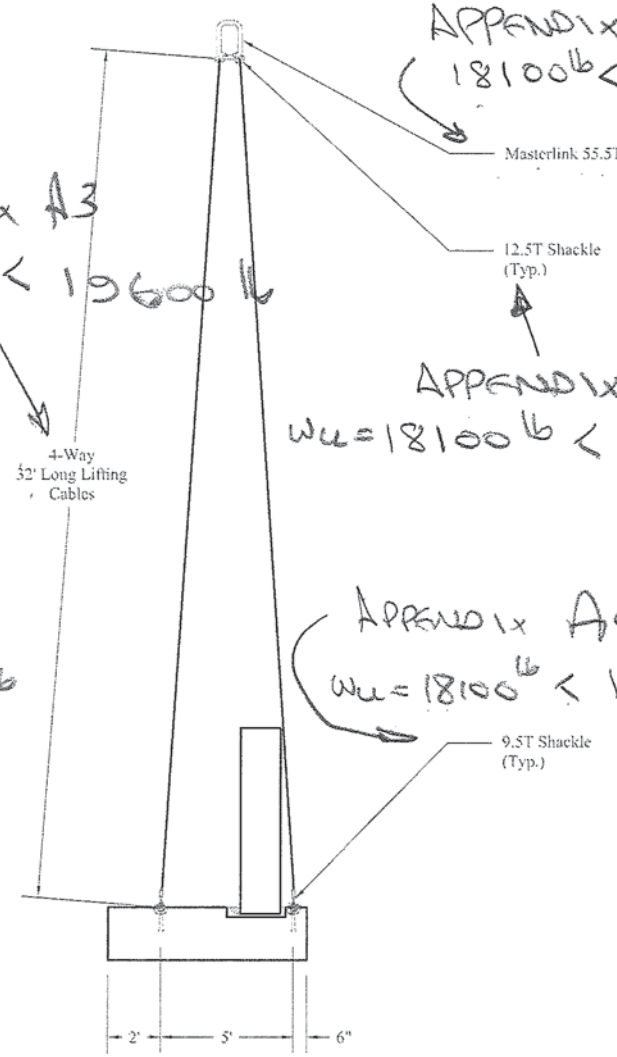

Section View

APPENDIX A1
$18100\ lb < 111000\ lb$

APPENDIX A3
$W_{LL} = 18100 < 19600\ lb$

APPENDIX A4
$W_{LL} = 18100\ lb < 25000\ lb$

APPENDIX B2
$W_{LL} = 18100\ lb \leq 18270\ lb$

APPENDIX A5
$W_{LL} = 18100\ lb < 200000\ lb$

APPENDIX A4A
$W_{LL} = 18100\ lb < 19000\ lb$

SHEET 4

Weight: 65,700 lbs

CONTRACTORS VTSPE:	PRECAST CONCRETE ABUTMENT SHOP DRAWINGS (SDI JOB #15163)		INSTALLER: CCS Construction 138 Munson Ave Morrisville, VT 05661 PH: 802-888-7701	FABRICATOR: 193 INDUSTRIAL AVE. WILLISTON, VT 05495 Ph: (802) 658-0201 SD Ireland Precast Division
	SUPERVISOR: M. WHEELER DETAILER: I. ADAMS CHECKER: E. Barendse ENGINEER:	PROJECT NAME: Stowe BRF 0235 (II) PROJECT #: 0235 (II) LOCATION: Stowe, VT	12/03/14	Lifting 3 of 3

NI | Round Steel Chain

Round steel chains for use in lifting. Maximum working temperature: 400°F. Standard surface: blasted, clear painted.

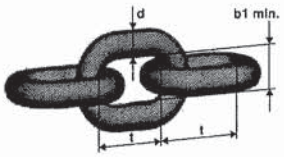

Code	Size	Nominal diameter d	Standard delivery length [feet]	Pitch t	Inside width b1 min.	Outside width b2 max.	WLL [lb]	Breaking force [lb]	Weight [lb/ft]
NI5.50	7/32″	0.217	400	0.67	0.31	0.83	2,700	10,800	0.470
NI70	9/32″	0.276	800	0.83	0.39	0.98	4,300	17,200	0.738
NI80	5/16″	0.315	500	0.94	0.43	1.14	5,700	22,800	0.939
NI100	3/8″	0.394	400	1.18	0.55	1.42	8,800	35,200	1.475
NI130	1/2″	0.512	200	1.54	0.71	1.85	15,000	60,000	2.548
NI160	5/8″	0.630	150	1.89	0.87	2.28	22,600	90,400	3.830
NI200	3/4″	0.787	100	2.44	1.02	2.80	35,300	141,200	5.780
NI220	7/8″	0.866	100	2.60	1.18	3.11	42,700	170,800	7.324
NI260	1″	1.024	100	3.07	1.38	3.70	59,700	238,800	10.214
NI320	1-1/4″	1.260	50	3.78	1.69	4.53	90,400	361,600	15.455

NEW

A | Master Link

Master link for 1 or 2 leg chain sling.

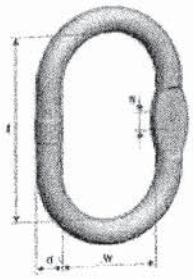

Code	WLL 0-45° [lb]	d [inch]	t [inch]	w [inch]	s [inch]	Weight [lb/pc.]	Master link for chain	
							1-leg	2-leg
A100	3,800	0.39	3.15	1.97	0.39	0.31	7/32″	-
A130	5,800	0.51	4.33	2.36	0.39	0.75	9/32″	7/32″
A160	7,500	0.63	4.33	2.36	0.55	1.17	5/16″	9/32″
A180	10,000	0.75	5.31	2.95	0.55	2.03	3/8″	5/16″
A220	16,700	0.91	6.30	3.54	0.67	3.53	1/2″	3/8″
A260	26,000	1.06	7.09	3.94	0.79	5.42	5/8″	1/2″
A320	39,100	1.30	7.87	4.33	1.02	9.13	3/4″	5/8″
A360	61,100	1.42	10.24	5.51	-	13.72	7/8″	3/4″
A450	83,100	1.77	13.39	7.09	-	28.27	1″	7/8″
A500	111,000	1.97	13.78	7.48	-	36.49	1-1/4″	1″
A560	156,600	2.36	15.75	7.87	-	59.56	-	1-1/4″
A720	234,900	2.76	18.11	9.84	-	99.23	-	-

TUFLEX ENDLESS ROUNDSLINGS

Tuflex Endless (EN)
The Most Versatile *Tuflex* Roundsling

Features, Advantages and Benefits

Maintains all the basic *Tuflex* features plus...

Promotes Safety

- Load stability and balance can be achieved by spreading sling legs.

Saves Money

- Wear points can be shifted to extend sling life
- The most flexible style of sling

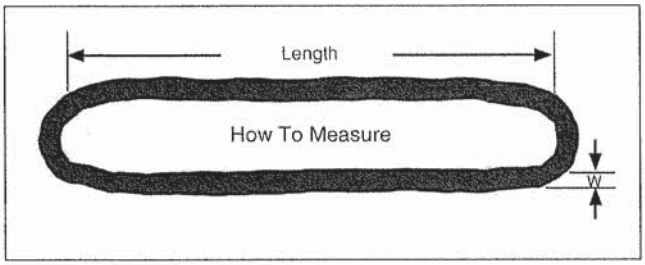

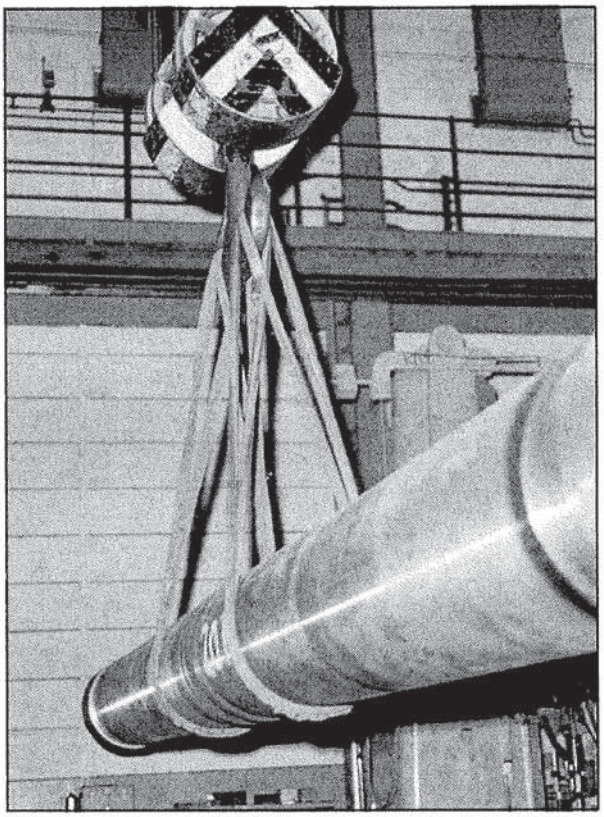

Part No.	Color	Rated Capacity (lbs.)* Vertical	Choker	Basket @ 90°	Basket @ 45°	Minimum Length (ft.)	Approximate Measurements Weight (lbs. / ft.)	Body Dia. Relaxed (in.)	(W) Width at Load (in.)	Minimum Hardware Dia. ** (in.)
EN30	Purple	2,600	2,100	5,200	3,600	1 1/2	.2	5/8	1	7/16
EN60	Green	5,300	4,200	10,600	7,400	1 1/2	.3	7/8	1 3/8	5/8
EN90	Yellow	8,400	6,700	16,800	11,800	3	.5	1 1/8	1 3/4	3/4
EN120	Tan	10,600	8,500	21,200	14,000	3	.6	1 1/8	1 7/8	7/8
EN150	Red	13,200	10,600	26,400	18,000	3	.8	1 3/8	2	1
EN180	White	16,800	13,400	33,600	23,000	3	.9	1 3/8	2 1/8	1 1/8
EN240	Blue	21,200	17,000	42,400	29,000	3	1.3	1 3/4	2 5/8	1 3/16
EN360	Grey	31,000	24,800	62,000	43,000	3	1.7	2 1/4	3 1/4	1 1/2
→ EN600	Brown	53,000	42,400	106,000	74,000	8	2.8	2 3/4	4	2
EN800	Olive	66,000	52,800	132,000	93,000	8	3.4	3 1/8	4 5/8	2 1/8
EN1000	Black	90,000	72,000	180,000	127,000	8	4.3	3 5/8	5 1/4	2 1/2

Used when lifting the abutment pieces.

* **⚠ WARNING** Do not exceed rated capacities. Sling capacity decreases as the angle from horizontal decreases. Slings should not be used at angles of less than 30°. Refer to Effect of Angle chart page 12.

** This is the smallest recommended connection hardware diameter to be used for a vertical hitch.

PERMALOC WIRE ROPE SLINGS

Lift-All Permaloc Slings are made using the flemish splice technique to form the eyes. Unlike the simple return loop method that places 100% of its strength on the swaged sleeve, *Permaloc* slings have reserve strength should the sleeve become damaged in use.

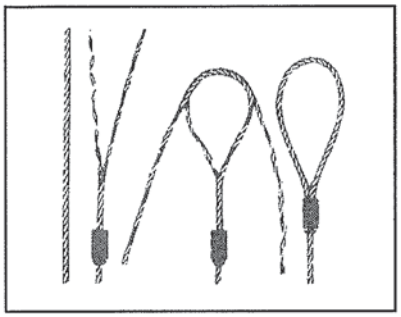

Features, Advantages and Benefits

Maintains all the basic *Lift-All* wire rope sling features plus ...

Promotes Safety

- Reserve strength - integrity of eyes not solely dependent upon steel sleeves
- IWRC resists crushing better than FC ropes

Saves Money

- When specified, thimble eyes protect wire rope from wear for increased life
- Good abrasion resistance for longer life

Permaloc With Single Part Body

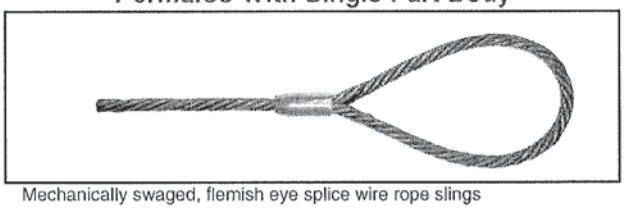

Mechanically swaged, flemish eye splice wire rope slings

IWRC (Independent Wire Rope Core) **Fiber core available at reduced capacities**

Wire Rope Class	Rope Dia. (in.)	EIP, IWRC [1] Rated Capacity (tons)* Vertical	Choker	V. Basket	[2] Min. Sling Length	Standard Eye Size (in.) W x L	Thimbled Eye Size (in.) W x L	Eye Hook Cap. (tons)	Crescent Thimble Eye Size (in.) W x L	Slip Thru Thimble Eye Size (in.) W x L	Sliding Choker Hook (in.)
6 x 19 EIP, IWRC	1/4	.65	.48	1.3	1' 6"	2 x 4	7/8 x 1 5/8	1	2 x 4	2 1/8 x 4 1/8	3/8
	5/16	1.0	.74	2.0	1' 9"	2 1/2 x 5	1 1/16 x 1 7/8	1	2 x 4	2 1/2 x 4 1/8	3/8
	3/8	1.4	1.1	2.9	2' 0"	3 x 6	1 1/8 x 2 1/8	1 1/2	2 x 4	2 1/2 x 4 1/8	3/8
	7/16	1.9	1.4	3.9	2' 3"	3 1/2 x 7	1 1/4 x 2 1/4	2	2 x 5	2 3/8 x 4 3/8	1/2
	1/2	2.5	1.9	5.1	2' 6"	4 x 8	1 1/2 x 2 3/4	3	2 1/4 x 6	2 3/8 x 4 3/8	1/2 **
	9/16	3.2	2.4	6.4	2' 9"	4 1/2 x 9	1 1/2 x 2 3/4	4 1/2	2 1/4 x 7	2 3/8 x 4 3/8	5/8
	5/8	3.9	2.9	7.8	3' 0"	5 x 10	1 3/4 x 3 1/4	4 1/2	2 3/4 x 7	3 3/8 x 6 5/8	5/8 **
	3/4	5.6	4.1	11	3' 6"	6 x 12	2 x 3 3/4	7	3 1/4 x 8 1/2	3 3/8 x 6 5/8	3/4 **
	7/8	7.6	5.6	15	4' 0"	7 x 14	2 1/4 x 4 1/4	11	4 1/2 x 10	3 3/4 x 7 1/8	7/8
	1	9.8	7.2	20	4' 6"	8 x 16	2 1/2 x 4 1/2	11	4 1/2 x 11 1/2	3 3/4 x 7 1/8	1
	1 1/8	12	9.1	24	5' 0"	9 x 18	2 7/8 x 5 1/8	15	4 7/8 x 13	4 3/8 x 8 3/8	1 1/8
							3 1/2 x 6 1/2	15	5 1/2 x 14 1/2	4 3/8 x 8 3/8	1 1/4
6 x 37 EIP, IWRC	1 3/8	18	13	36	6' 0"	11 x 22	3 1/2 x 6 1/4	22	6 x 16	5 x 9 1/2	1 3/8
	1 1/2	21	16	42	7' 0"	12 x 24	3 1/2 x 6 1/4	22	6 x 17 1/2	5 x 9 1/2	1 1/2**
	1 3/4	28	21	57	8' 0"	14 x 28	4 1/2 x 9	30	7 x 20	6 3/4 x 11 3/4	-
	2	37	28	73	9' 0"	16 x 32	6 x 12	37	7 x 23 1/2	8 x 14 1/2	-
	2 1/4	44	35	89	10' 0"	18 x 36	7 x 14	45	8 1/2 x 26	8 x 15 1/2	-
	2 1/2	54	42	109	11' 0"	20 x 40	-	-	8 1/2 x 29 1/2	-	-

(4) 32' long wire rope

Used when lifting the wing walls and the retaining wall.

Note: Larger diameter slings available. Basket ratings are based on a minimum D/d of 25. See page 74.

1. 1 Ton = 2,000 lbs.
2. Minimum sling length when using standard eyes.

Note: **Length Tolerances** - Single Part Wire Rope Slings - Standard length tolerance is plus or minus two rope diameters, or plus or minus 0.5% of the sling length, whichever is greater.

** See page 91 for reduced choker capacity when using these hook sizes.

* **⚠ WARNING** Do not exceed rated capacities. Sling capacity decreases as the angle from horizontal decreases. Slings should not be used at angles of less than 30°. Refer to Effect of Angle chart page 12.

APPENDIX A4A

Crosby® Alloy Screw Pin Shackles

Load Rated®

"QT" QUENCHED & TEMPERED

QUIC-CHECK®

APPLICATION INSTRUCTIONS
SEE PAGE 89 OF THE GENERAL CATALOG

G-209A

G-209A Screw pin anchor shackles meet the performance requirements of Federal Specification RR-C-271F Type IVA, Grade B, Class 2, except for those provisions required of the contractor. For additional information, see page 444.

- Capacities 2 thru 21 metric tons. Meets performance requirements of Grade 8 shackles.
- Forged Alloy Steel – Quenched and Tempered, with alloy pins.
- Working Load Limit permanently shown on every shackle.
- Hot Dip Galvanized.
- Shackles can be furnished proof tested with certificates to designated standards, such as ABS, DNV, Lloyds, or other certification. Charges for proof testing and certification available when requested at the time of order.
- Approved for use at -40 degree C (-40 degree F) to 204 degree C (400 degree F).
- Meets or exceeds all requirements of ASME B30.26 including identification, ductility, design factor, proof load and temperature requirements. Importantly, these shackles meet other critical performance requirements including fatigue life, impact properties and material traceability, not addressed by ASME B30.26.

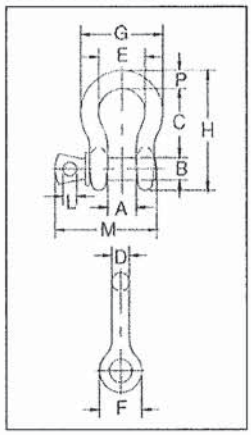

G-209A Crosby® Alloy Screw Pin Shackles

Nominal Size (in.)	Working Load Limit (t)*	G-209A Stock No.	Weight Each (lbs.)	Dimensions (in.) A	B	C	D	E	F	G	H	L	M	P	Tolerance +/- C	A
3/8	2	1017450	.31	.66	.44	1.44	.38	1.03	.91	1.78	2.49	.25	2.03	.38	.13	.06
7/16	2-2/3	1017472	.38	.75	.50	1.69	.44	1.16	1.06	2.03	2.91	.31	2.38	.44	.13	.06
1/2	3-1/3	1017494	.63	.81	.63	1.88	.50	1.31	1.19	2.31	3.28	.38	2.69	.50	.13	.06
5/8	5	1017516	1.38	1.06	.75	2.38	.63	1.69	1.50	2.94	4.19	.44	3.34	.69	.13	.06
3/4	7	1017538	2.35	1.25	.88	2.81	.75	2.00	1.81	3.50	4.97	.50	3.97	.81	.25	.06
7/8	9-1/2	1017560	3.61	1.44	1.00	3.31	.88	2.28	2.09	4.03	5.83	.50	4.50	.97	.25	.06
1	12-1/2	1017582	5.32	1.69	1.13	3.75	1.00	2.69	2.38	4.69	6.56	.56	5.07	1.06	.25	.06
1-1/8	15	1017604	7.25	1.81	1.25	4.25	1.16	2.91	2.69	5.16	7.47	.63	5.59	1.25	.25	.06
1-1/4	18	1017626	9.88	2.03	1.38	4.69	1.29	3.25	3.00	5.75	8.25	.69	6.16	1.38	.25	.06
1-3/8	21	1017648	13.25	2.25	1.50	5.25	1.42	3.63	3.31	6.38	9.16	.75	6.84	1.50	.25	.13

* Maximum Proof Load is 2 times the Working Load Limit (metric tons) and 2.2 times the Working Load Limit (short tons). Minimum Ultimate Strength is 4.5 times the Working Load Limit for metric tonnes, and 5 times the Working Load Limit for short tons. For Working Load Limit reduction due to side loading applications, see page 91.

Load Rated®

"QT" QUENCHED & TEMPERED

APPLICATION INSTRUCTIONS
SEE PAGE 89 OF THE GENERAL CATALOG

G-2169

S-2169

- Capacities of 7, 12.5 and 18 metric tons.
- Quenched and Tempered for maximum strength.
- Forged Alloy Steel.
- Available in galvanized and self colored finished.
- Individually proof tested and magnetic particle inspected. Crosby certification available at time of order.
- Meets or exceeds all requirements of ASME B30.26 including identification, ductility, design factor, proof load and temperature requirements. Importantly, these shackles meet other critical performance requirements including fatigue life, impact properties and material traceability, not addressed by ASME B30.26.
- Look for the Red Pin® . . . the mark of genuine Crosby quality.

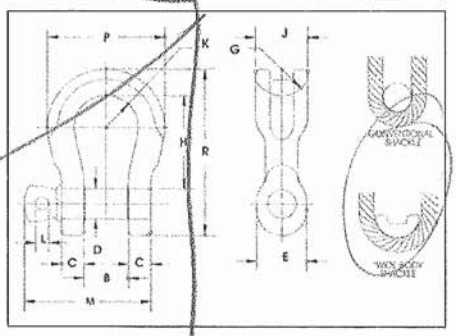

G-2169 / S-2169 Screw Pin "Wide Body" Shackles

Working Load Limit (t)*	G-2169 Stock No.	S-2169 Stock No.	Weight Each (lbs.)	Dimensions (in.) B +/- .25	C	D +/- .02	E	G	H	J	K	L	M	P	R
7	1021655	1021664	3.5	1.25	.69	.88	1.82	1.25	3.56	1.60	1.25	.50	3.97	4.10	5.87
12.5	1021673	1021682	8.8	1.69	.92	1.13	2.38	1.37	4.63	2.13	1.63	.56	5.13	5.51	7.63
18	1021691	1021699	13	2.03	1.16	1.38	2.69	1.50	5.81	2.50	2.00	.69	6.25	6.76	9.38

* Ultimate Load is 5 times the Working Load Limit. Forged Alloy Steel. Proof Load is 2 times the Working Load Limit.

Copyright © 2013 The Crosby Group LLC
All Rights Reserved

APPENDIX A4 B

Crosby® Screw Pin Shackles

Load Rated® Fatigue Rated® QUIC-CHECK® MAXTOUGH®

SCREW PIN ANCHOR SHACKLES

G-209 / S-209

G-209 Screw pin anchor shackles meet the performance requirements of Federal Specification RR-C-271F Type IVA, Grade A, Class 2, except for those provisions required of the contractor. For additional information, see page 444.

- Capacities 1/3 thru 55 metric tons, grade 6.
- Forged - Quenched and Tempered, with alloy pins.
- Working Load Limit and grade "6" permanently shown on every shackle.
- Hot Dip galvanized or Self Colored.
- Fatigue rated.
- Shackles 25t and larger are **RFID EQUIPPED.**
- Shackles can be furnished proof tested with certificates to designated standards, such as ABS, DNV, Lloyds, or other certification. Charges for proof testing and certification available when requested at the time of order.
- Approved for use at -40 degree C (-40 degree F) to 204 degree C (400 degree F).
- 2t through 25t bow and screw pin are Certified to meet charpy impact testing of 42 joules (31 ft-lbs.) min. ave. at -20 degree C (-4 degree F).
- All shackles are Quenched and Tempered and can meet DNV impact requirements of 42 joules (31 ft. lbs.) at -20 degree C (-4 degree F).
- Meets or exceeds all requirements of ASME B30.26.
- Type Approval and certification in accordance with ABS 2006 Steel Vessel Rules 1-1-17.7, and ABS Guide for Certification of Cranes.
- Crosby 2t through 25t G209 anchor shackles are type approved to DNV Certification Notes 2.7-1 -Offshore Containers. These Crosby shackles are statistical proof and impact tested. The tests are conducted by Crosby and 3.1 test certification is available upon request.
- Look for the Red Pin® . . . the mark of genuine Crosby quality.

SCREW PIN CHAIN SHACKLES

G-210 / S-210

G-210 Screw pin chain shackles meet the performance requirements of Federal Specification RR-C-271F, Type IVB, Grade A, Class 2, except for those provisions required of the contractor. For additional information, see page 444.

Shackles

G-209 / S-209 Screw Pin Anchor Shackles

G-209 / S-209

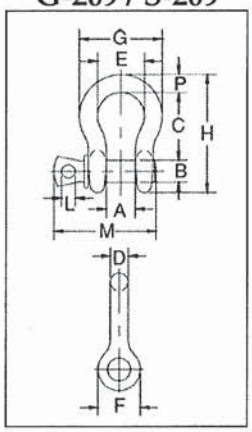

Nominal Size (in.)	Working Load Limit (t)*	Stock No. G-209	Stock No. S-209	Weight Each (lbs.)	Dimensions (in.) A	B	C	D	E	F	G	H	L	M	P	Tolerance +/- C	A
3/16	1/3	1018357	–	.06	.38	.25	.88	.19	.60	.56	.98	1.47	.16	1.14	.19	.06	.06
1/4	1/2	1018375	1018384	.10	.47	.31	1.13	.25	.78	.61	1.28	1.84	.19	1.43	.25	.06	.06
5/16	3/4	1018393	1018400	.18	.53	.38	1.22	.31	.84	.75	1.47	2.09	.22	1.71	.31	.06	.06
3/8	1	1018419	1018428	.31	.66	.44	1.44	.38	1.03	.91	1.78	2.49	.25	2.02	.38	.13	.06
7/16	1-1/2	1018437	1018446	.38	.75	.50	1.69	.44	1.16	1.06	2.03	2.91	.31	2.37	.44	.13	.06
1/2	2	1018455	1018464	.72	.81	.63	1.88	.50	1.31	1.19	2.31	3.28	.38	2.69	.50	.13	.06
5/8	3-1/4	1018473	1018482	1.37	1.06	.75	2.38	.63	1.69	1.50	2.94	4.19	.44	3.34	.69	.13	.06
3/4	4-3/4	1018491	1018507	2.35	1.25	.88	2.81	.75	2.00	1.81	3.50	4.97	.50	3.97	.81	.25	.06
7/8	6-1/2	1018516	1018525	3.62	1.44	1.00	3.31	.88	2.28	2.09	4.03	5.83	.50	4.50	.97	.25	.06
1	8-1/2	1018534	1018543	5.03	1.69	1.13	3.75	1.00	2.69	2.38	4.69	6.56	.56	5.13	1.06	.25	.06
1-1/8	9-1/2	1018552	1018561	7.41	1.81	1.25	4.25	1.16	2.91	2.69	5.16	7.47	.63	5.71	1.25	.25	.06
1-1/4	12	1018570	1018589	9.50	2.03	1.38	4.69	1.29	3.25	3.00	5.75	8.25	.69	6.25	1.38	.25	.06
1-3/8	13-1/2	1018598	1018605	13.53	2.25	1.50	5.25	1.42	3.63	3.31	6.38	9.16	.75	6.83	1.50	.25	.13
1-1/2	17	1018614	1018623	17.20	2.38	1.63	5.75	1.54	3.88	3.63	6.88	10.00	.81	7.33	1.62	.25	.13
1-3/4	25	1018632	1018641	27.78	2.88	2.00	7.00	1.84	5.00	4.19	8.86	12.34	1.00	9.06	2.25	.25	.13
2	35	1018650	1018669	45.00	3.25	2.25	7.75	2.08	5.75	4.81	9.97	13.68	1.22	10.35	2.40	.25	.13
2-1/2	55	1018678	1018687	85.75	4.13	2.75	10.50	2.71	7.25	5.69	12.87	17.84	1.38	13.00	3.13	.25	.25

G-210 / S-210 Screw Pin Chain Shackles

G-210 / S-210

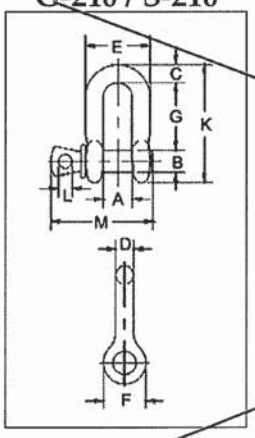

Nominal Size (in.)	Working Load Limit (t)*	Stock No. G-210	Stock No. S-210	Weight Each (lbs.)	Dimensions (in.) A	B	C	D	E	F	G	K	L	M	Tolerance +/- G	A
1/4	1/2	1019150	1019169	.11	.47	.31	.25	.25	.97	.62	.97	1.59	.19	1.43	.06	.06
5/16	3/4	1019178	1019187	.17	.53	.38	.31	.31	1.15	.75	1.07	1.91	.22	1.71	.06	.06
3/8	1	1019196	1019203	.28	.66	.44	.38	.38	1.42	.92	1.28	2.31	.25	2.02	.13	.06
7/16	1-1/2	1019212	1019221	.43	.75	.50	.44	.44	1.63	1.06	1.48	2.67	.31	2.37	.13	.06
1/2	2	1019230	1019249	.59	.81	.63	.50	.50	1.81	1.18	1.66	3.03	.38	2.69	.13	.06
5/8	3-1/4	1019258	1019267	1.25	1.06	.75	.63	.63	2.32	1.50	2.04	3.76	.44	3.34	.13	.06
3/4	4-3/4	1019276	1019285	2.63	1.25	.88	.81	.75	2.75	1.81	2.40	4.53	.50	3.97	.25	.06
7/8	6-1/2	1019294	1019301	3.16	1.44	1.00	.97	.88	3.20	2.10	2.86	5.33	.50	4.50	.25	.06
1	8-1/2	1019310	1019329	4.75	1.69	1.13	1.00	1.00	3.69	2.38	3.24	5.94	.56	5.13	.25	.06
1-1/8	9-1/2	1019338	1019347	6.75	1.81	1.25	1.25	1.13	4.07	2.69	3.61	6.78	.63	5.71	.25	.06
1-1/4	12	1019356	1019365	9.06	2.03	1.38	1.38	1.25	4.53	3.00	3.97	7.50	.69	6.25	.25	.13
1-3/8	13-1/2	1019374	1019383	11.63	2.25	1.50	1.50	1.38	5.01	3.31	4.43	8.28	.75	6.53	.25	.13
1-1/2	17	1019392	1019409	15.95	2.38	1.63	1.62	1.50	5.38	3.62	4.87	9.05	.81	7.33	.25	.13
1-3/4	25	1019418	1019427	26.75	2.88	2.00	2.12	1.75	6.38	4.19	5.78	10.97	1.00	9.06	.25	.13
2	35	1019436	1019445	42.31	3.25	2.25	2.36	2.10	7.25	5.00	6.77	12.74	1.13	10.35	.25	.13
2-1/2	55	1019454	1019463	71.75	4.12	2.75	2.63	2.63	9.38	5.68	8.07	14.85	1.38	13.00	.25	.25

* NOTE: Maximum Proof Load is 2.0 times the Working Load Limit. Minimum Ultimate Strength is 6 times the Working Load Limit. For Working Load Limit reduction due to side loading applications, see page 91.

Copyright © 2013 The Crosby Group LLC
All Rights Reserved

ALP LIFTING EYE - STANDARD

Designed as an attachment link for lifting and transport of precast concrete units in combination with the ALP Lifting Pin Anchor System. The Lifting Eye consists of a round body with a protruding lever arm and a high strength bail. The body has a "T" slot that engages the head of a Lifting Pin Anchor. The rotation capabilities allow the lifting eye to stay oriented in the direction of loading without binding up.

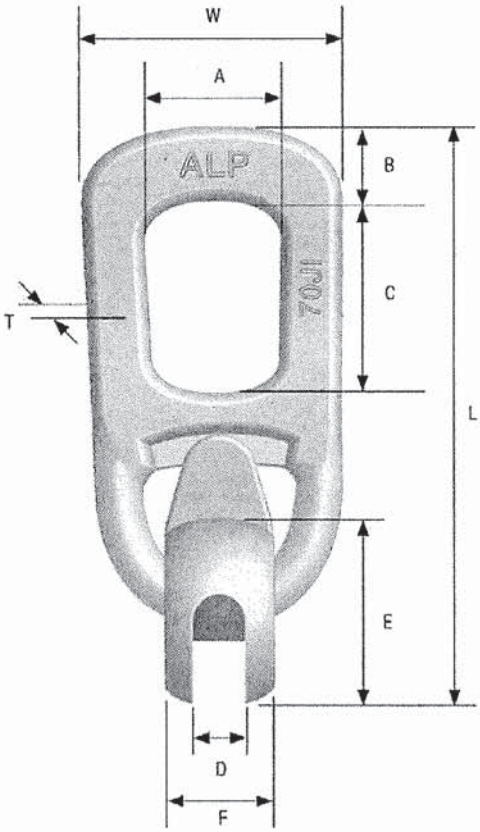

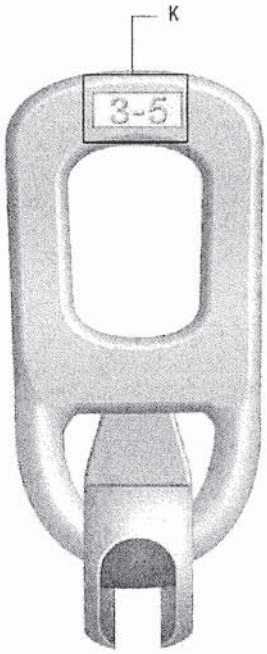

Part Number	Description / Capacity	Weight Each (lbs)	L	W	T	A	B	C	D	E	F	K Load Range (Tons)	Ultimate Capacity in Tension (lbs)
LPLE1T	Lifting Eye for 1T, 1.3T Anchors	2.20	7-11/32"	3"	1/2"	1-3/4"	7/8"	2-3/4"	15/32"	2-1/8"	1-5/16"	1-1.3	13,000
LPLE2T	Lifting Eye for 1.5T, 2T, 2.5T Anchors	3.60	9"	3-1/2"	5/8"	2-1/8"	1"	3-3/8"	11/16"	2-9/16"	1-5/8"	1.5-2.5	25,000
LPLE4T	Lifting Eye for 3T, 4T, 5T Anchors	7.65	11"	4-11/16"	11/16"	2-5/8"	1-15/32"	3-7/16"	29/32"	3-3/8"	2-1/4"	3-5	50,000
LPLE8T	Lifting Eye for 6T, 8T, 10T Anchors	21.70	15-1/2"	6-1/4"	1-1/16"	3-1/8"	2"	4-3/8"	1-1/4"	4-1/2"	2-15/16"	6-10	100,000
LPLE20T	Lifting Eye for 12T, 16T, 20T Anchors	39.00	20"	7-11/16"	1-3/8"	4-3/8"	2-13/16"	5-15/16"	1-11/16"	5-5/8"	4-3/8"	12-20	200,000

Rated load has a 5:1 safety factor.

Used with abutments and retaining wall footing.

APPENDIX B1

OXFORD Industrial Technologies, LLC

PO Box 736 • Stevenson, CT 06491
www.oxfordtechusa.com
Phone: (203) 268-6030
Fax: (203) 445-1240
info@oxfordtechusa.com

Oxford Lift System®

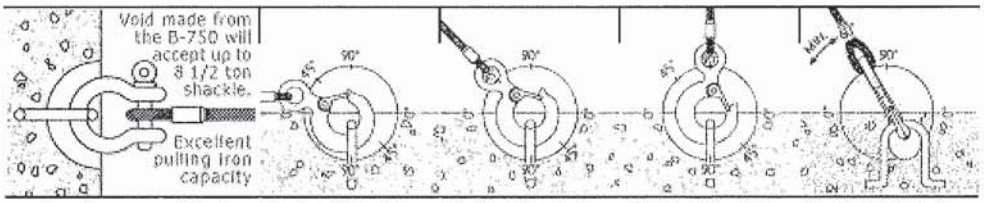

Anchor Product Code	Slab Min. Inches	Safe Working Load @ 90 degree Shear-0 degree Pull	Safe Working Load @ 90 degree Shear-45 degree Pull	Safe Working Load @ 90 degree Tension-90 degree Pull	Safe Working Load @ 90 degree Shear-60 degree Pull
A 500-3	4.00"	4,500	4,000	3,500	4,000
A 500-4	5.00"	8,000	5,500	4,000	5,000
A 500-5	6.00"	10,500	6,500	5,000	5,500
A 750-5	6.00"	12,500	8,000	7,000	7,000
A 750-7	8.00"	15,000	12,500	10,000	10,000

Note: Safe Working Load provides a factor of safety of approximately 4:1
Test Results are based on a minimum concrete compressive strength of 4,000 psi.

Used for the wing walls.

<back next>

Home | B-500 & B-750 | S-150 | S-300 | Lift Anchor & Order Form | Concrete Products
Pull Iron Capacity | Anchors & Accessories | Toggle-Lok | Insert/Lift Anchor | Grid-Lok/ Rebar Chair | Helpful Calculations COMING SOON!

ALP LIFTING PIN ANCHORS

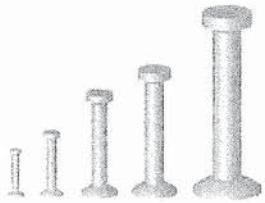

All ALP Lifting Pins are manufactured using high strength steel with hot forged ends. The head design provides uniform engagement with the Lifting Eye, and the large forged anchor "foot" is embedded in the concrete to create the lifting capacity. Safe Working Loads (SWL) displayed in the below chart apply to loading in any direction. These Lifting Pin Anchors are designed to meet the OSHA requirements of a 4 to 1 Safety Factor.

Standard Finish is Hot-Dipped Galvanized

				In Concrete Capacities 4:1 SWL									
Part Number	Ton	Length (in.)	Weight Per Piece (lbs)	Min. Slab Thickness (in.)	1500 PSI (lbs)	2000 PSI (lbs)	2500 PSI (lbs)	3000 PSI (lbs)	3500 PSI (lbs)	4000 PSI (lbs)	4500 PSI (lbs)	5000 PSI (lbs)	Min. Edge Distances (in.)
LPA1T258G	1T	2-5/8"	0.14	3-1/2"	1,415	1,630	1,825	2,000	2,000	2,000	2,000	2,000	6"
LPA1T338G	1T	3-3/8"	0.16	5"	1,820	2,000	2,000	2,000	2,000	2,000	2,000	2,000	7"
LPA1T434G	1T	4-3/4"	0.21	6"	2,000	2,000	2,000	2,000	2,000	2,000	2,000	2,000	8"
LPA2T234G	2T	2-3/4"	0.32	4"	1,375	1,585	1,775	1,940	2,100	2,245	2,380	2,510	6"
LPA2T338G	2T	3-3/8"	0.35	5"	2,710	3,130	3,500	3,830	4,000	4,000	4,000	4,000	7"
LPA2T434G	2T	4-3/4"	0.45	6"	3,500	4,000	4,000	4,000	4,000	4,000	4,000	4,000	10"
LPA2T512G	2T	5-1/2"	0.48	7"	4,000	4,000	4,000	4,000	4,000	4,000	4,000	4,000	12"
LPA2T634G	2T	6-3/4"	0.58	8"	4,000	4,000	4,000	4,000	4,000	4,000	4,000	4,000	12"
LPA2T11G	2T	11"	0.85	12-1/2"	4,000	4,000	4,000	4,000	4,000	4,000	4,000	4,000	18"
LPA4T3G	4T	3"	0.73	4"	1,950	2,250	2,515	2,755	2,975	3,180	3,375	3,555	6"
LPA4T312G	4T	3 1/2"	0.82	5"	2,815	3,255	3,640	3,985	4,305	4,600	4,880	5,145	10"
LPA4T334G	4T	3-3/4"	0.85	5"	3,250	3,755	4,200	4,600	4,965	5,310	5,635	5,940	10"
				8"	4,225	4,880	5,460	5,980	6,460	6,905	7,325	7,720	12"*
LPA4T414G	4T	4-1/4"	0.91	6"	3,845	4,445	4,965	5,440	5,880	6,285	6,665	7,025	10"
LPA4T434G	4T	4-3/4"	0.98	6"	4,445	5,130	5,740	6,285	6,790	7,260	7,700	8,000	10"
				10"	5,420	6,260	7,000	7,665	8,000	8,000	8,000	8,000	14"*
LPA4T512G	4T	5-1/2"	1.08	7"	4,840	5,590	6,250	6,850	7,400	7,910	8,000	8,000	12"
LPA4T718G	4T	7-1/8"	1.32	9"	6,710	8,000	8,000	8,000	8,000	8,000	8,000	8,000	13"
LPA4T912G	4T	9-1/2"	1.60	11"	8,000	8,000	8,000	8,000	8,000	8,000	8,000	8,000	16"
LPA8T434G	8T	4-3/4"	2.15	6-1/2"	4,185	4,835	5,405	5,925	6,400	6,840	7,255	7,645	10"
LPA8T634G	8T	6-3/4"	2.50	8"	7,025	8,110	9,070	9,935	10,730	11,475	12,170	12,825	14"
				14"	9,715	11,215	12,540	13,740	14,840	15,865	16,000	16,000	21"*
LPA8T									16,000	16,000	16,000	16,000	18"
LPA8T338G	8T	13-3/8	4.25	15	16,000	16,000	16,000	16,000	16,000	16,000	16,000	16,000	22"
LPA8T2634G	8T	26-3/4"	7.90	29"	16,000	16,000	16,000	16,000	16,000	16,000	16,000	16,000	36"
LPA20T10G	20T	10"	8.25	11-1/2"	11,960	13,810	15,440	16,915	18,270	19,530	20,715	21,835	20"
				20"	16,970	19,595	21,910	24,000	25,920	27,710	29,295	30,985	24"*
LPA20T1934G	20T	19-3/4"	13.50	22"	28,000	32,328	36,145	39,595	40,000	40,000	40,000	40,000	36"

Used for the abutments and the retaining wall footing.

- Shaded area indicates the capacity in concrete is limited by the mechanical capacity of the anchor

- The Safety Factor for the listed loads is approximately 4 to 1 in normal weight concrete (145-150PCF)
- Loads are based on normal anchor recess dimensions: 1T: 5/16"; 2T: 7/16"; 8T, 10T, 16T and 20T: 9/16"
- Loads are listed at varying concrete strengths (PSI) to accommodate varying conditions at time of loading
- *Concrete thickness exceeding the listed minimums may increase the listed capacity. Example: the 20Tx10" has two capacities listed, one for the 11-1/2" minimum slab and one for the 20" normal slab. These capacity gains are only obtained with the 4T x 3-3/4", 4T x 4-3/4", 8/10T x 6-3/4" and the 20Tx10" anchors. Contact ALP customer service for further assistance.
- Proper rigging and all lifting angle load magnifications are to be used to determine actual applied loads
- Minimal reinforcement required to achieve above load values

APPENDIX B3

Eric Barendse

From: Skip Francies <SkipFrancies@alpatterson.com>
Sent: Monday, December 01, 2014 3:09 PM
To: Eric Barendse
Cc: John Ems
Subject: Go!

I have established the minimum capacity with the anchor 6" in and 24" from the end.
The capacity is 17,300# verse your 16,750# at 4500psi. You have 5000psi.
Be sure the anchors are placed inside of the perimeter reinforcement.

Yes, we have nmb Splice Sleeves.
Best Regards,

Skip Francies, FPCI
A.L. Patterson Inc.
President Precast Supply Division
T: 215-310-2128
C: 813-230-8266
F: 215-310-2129
E: skipf@alpatterson.com

Verification that the 20T lift can be placed at 6" from the toe edge of the retaining wall.

Your Single Source Supplier!