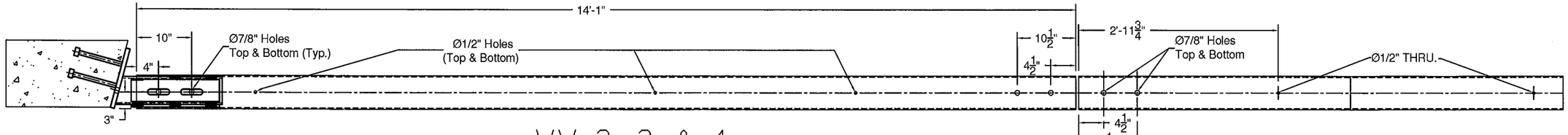

WW 2, 3, & 4

PAINTED BROWN
ASTM 708.03

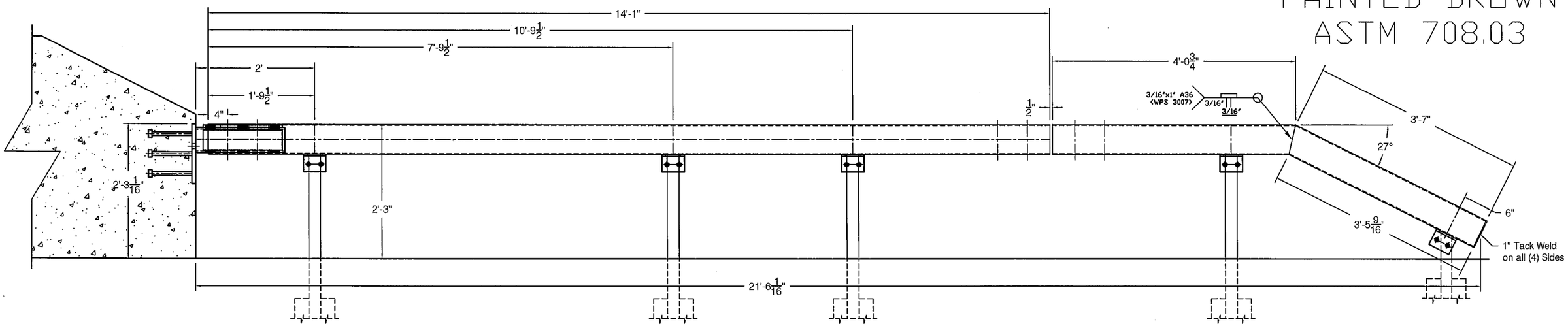

PLAN VIEW

PART IS SYMETRICAL

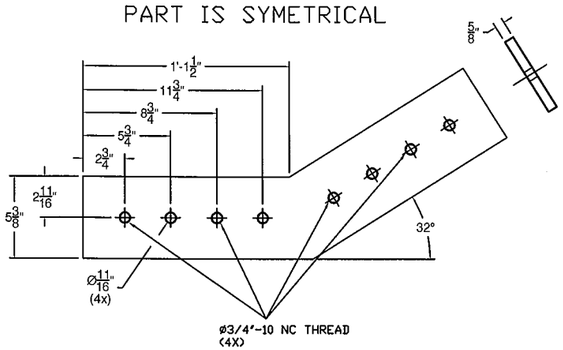

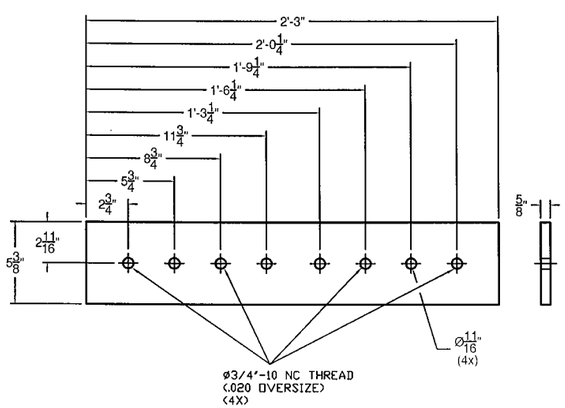

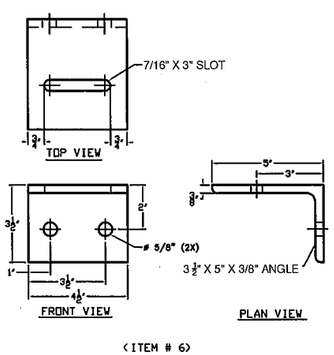

(ITEM # 6)

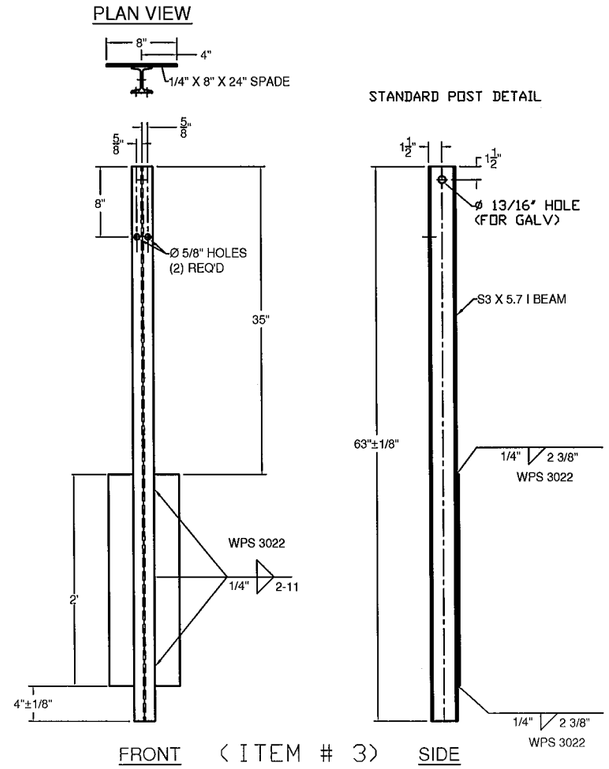

FRONT (ITEM # 3) SIDE

BILL OF MATERIAL

ITEM #	QTY	PART #	DESCRIPTION	ASTM DESIGNATION
1	3	0033.91356	6' X 6' X 3/16' BOX BEAM @ 14'-1' W/ END MITER	A500 Gr. B
1A	1	0033.91357	6' X 6' X 3/16' BOX BEAM @ 14'-1' W/ 6' PARTIAL RADIUS & END MITER	A500 Gr. B
2	2	0054.01001	6' X 6' X 3/16' END SECTION	A500 Gr. B
2A	2	0054.01001T	6' X 6' X 3/16' END SECTION W/ END MITER	A500 Gr. B
3	16	0013.57021	S3 X 5.7 POST, PUNCH 8' W/SPD @ 63' LG	A572 Gr. 50
4	4	0013.57060	S3 X 5.7 END POST, W/SPD @ 3'-8' LG	A572 Gr. 50
5	3 PR.	0054.00100	5/8' X 5 3/8' INTERNAL SPLICE PLATE @ 2'-3'	A709
5A	1 PR.	0054.00132	5/8' X 5 3/8' INTERNAL SPLICE PLATE W/ 32° ANGLE	A709
6	20	0054.00050	L5' X 3 1/2' X 3/8' RAILING ANGLE	A36
7	8	0080.06340	ø 3/4' X 7-1/2' HEX BOLT, NUT, & (2) F.W.	A325, A563 DH, & F436
8	20	0080.06140	ø 3/4' X 2-3/4'' HEX BOLT, NUT, (2) F.W., & L.W.	A325, A563 DH, F436, & ASME B18.21.1
9	20	0080.03355	ø 3/8' X 7 1/2' BOLT, NUT, & 2 FW	A307
10	32	0080.06005	ø 3/4' X 1 1/2' BOLT, & FW	A325

ITEM 1, 2, & 5 - WW 2, 3, & 4
ITEM 1A, 2A & 5A - WW 1

NOTES:

1. ALL WORK AND MATERIALS SHALL CONFORM TO SECTION 525.
2. PRIOR TO GALVANIZING THE ASSEMBLED POST, GRIND ALL EDGES TO A MINIMUM RADIUS OF 1/16'.
3. ALL POSTS SHALL BE SET NORMAL TO GRADE.
4. BOLTS SHALL BE TORQUED SNUG TIGHT (APPROXIMATELY 100 FT-LB).
5. BRIDGE RAILING SHALL HAVE A RUBBED FINISH IN ACCORDANCE WITH SECTION 501.
6. HOLES FOR MOUNTING DELINEATORS TO BE FIELD DRILLED. HOLES SHALL BE COATED WITH AN APPROVED ZINC-RICH PAINT PRIOR TO INSTALLATION.
7. ALL STEEL COMPONENTS OF BRIDGE RAILING AND BOX BEAM GUARDRAIL, INCLUDING THE RAIL CONNECTION TO THE BRIDGE RAIL SHALL BE GALVANIZED IN ACCORDANCE WITH THE STANDARD SPECIFICATIONS AND SURFACE PREPARED FOR PAINTING IN ACCORDANCE WITH ASTM D 6386. COMPONENTS SHALL BE PAINTED BROWN IN ACCORDANCE WITH SUBSECTION 708.03.

ITEM #: 621.30

SHEET 1 OF 2

STRUCTURAL STEEL TO COMPLY W/ ASTM A6

TOLERANCE UNLESS OTHERWISE NOTED:
FRACTIONS = ± 1/16"
ANGLES = ± 1/2°
DIAMETERS = ± 1/32"

BOX BEAM GUIDE RAIL

PROJECT: STOWE BRF 0235 (11), VT. RT. 108, MAJOR COLLECTOR, BRIDGE #2
TOWN OF STOWE, LAMOILLE COUNTY

R E V	NO.	DATE	DESCRIPTION	BY	R E V	NO.	DATE	DESCRIPTION	BY

ELDERLEE, INC.
OAKS CORNERS, NEW YORK 14518
E-Mail: dlong@elderlee.com / epeek@elderlee.com
Tel: 315-789-6670 Fax: 315-789-6615

AISC CERTIFIED FABRICATOR

DRAWN	E.P.	1/13/15
CHECKED	D.L.	1/15/15
APPROVED	.	.
SCALE	SCHEMATIC	
DRAWING NO.	FR L - STOWE-BB	

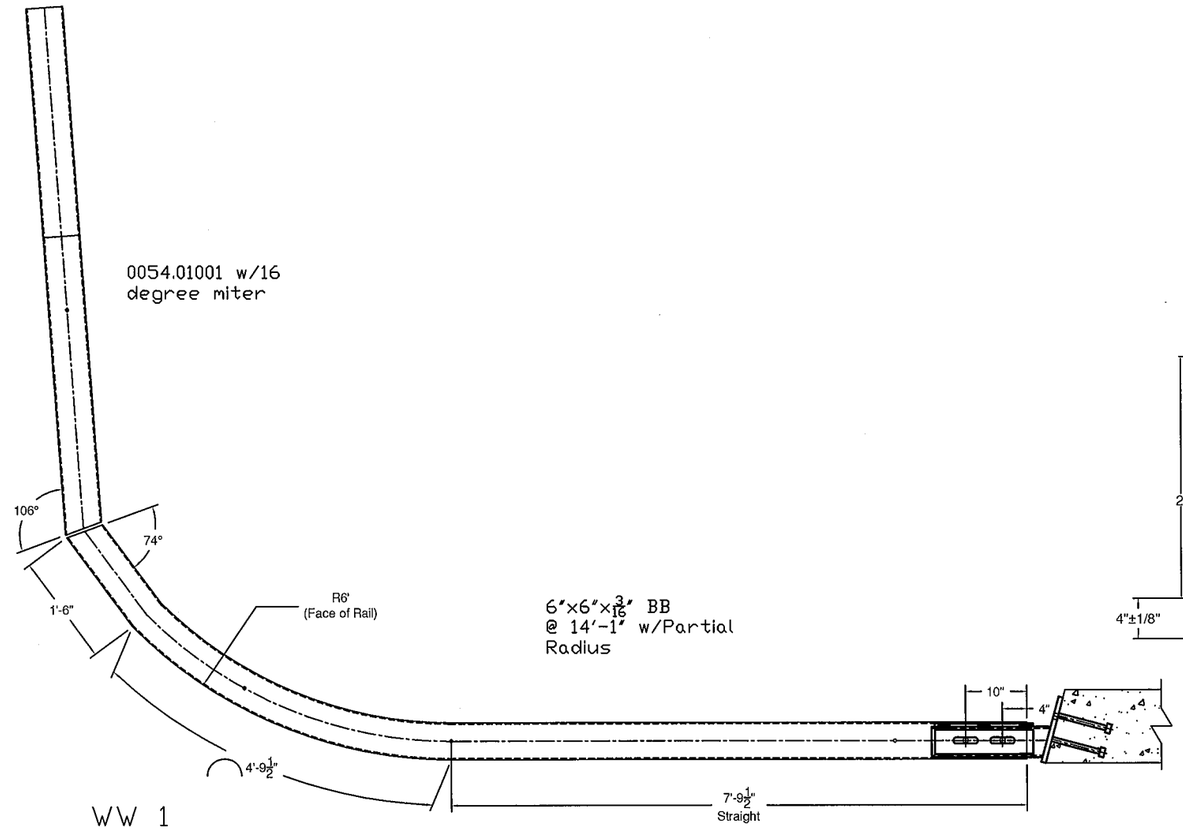

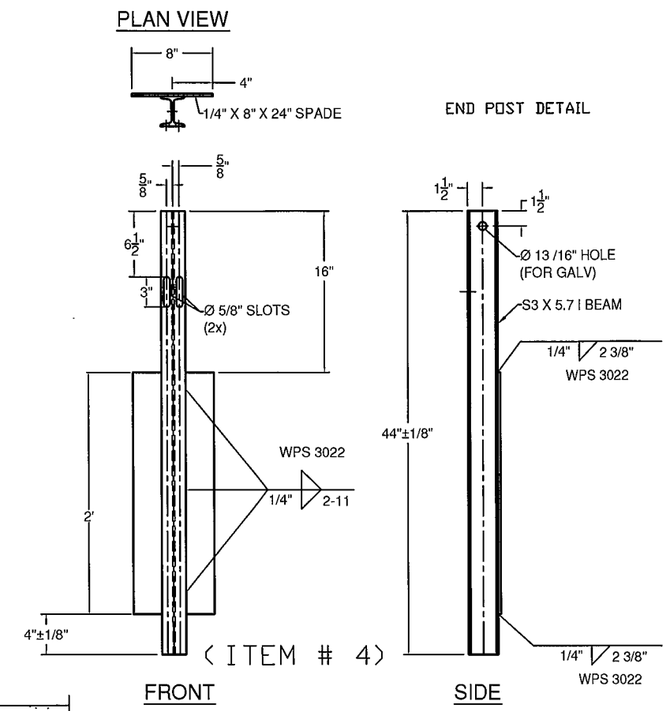

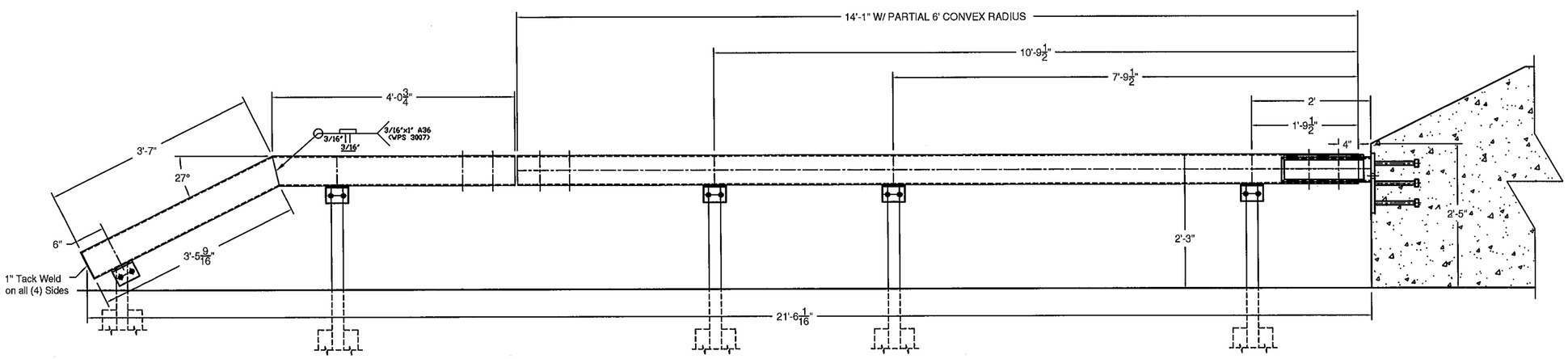

ITEM #: 621.30

SHEET 2 OF 2

STRUCTURAL STEEL TO COMPLY W/ ASTM A6

TOLERANCE UNLESS OTHERWISE NOTED:
FRACTIONS = ± 1/16"
ANGLES = ± 1/2°
DIAMETERS = ± 1/32"

BOX BEAM GUIDE RAIL

PROJECT: STOWE BRF 0235 (11), VT. RT. 108, MAJOR COLLECTOR, BRIDGE #2
TOWN OF STOWE, LAMOILLE COUNTY

REV	NO.	DATE	DESCRIPTION	BY	REV	NO.	DATE	DESCRIPTION	BY

ELDERLEE, INC.
OAKS CORNERS, NEW YORK 14518
E-Mail: dlong@elderlee.com / epeek@elderlee.com
Tel: 315-789-6670 Fax: 315-789-6615

AISC CERTIFIED FABRICATOR

DRAWN	E.P.	1/13/15
CHECKED	D.L.	1/15/15
APPROVED	.	.
SCALE	SCHEMATIC	
DRAWING NO.	FR L - STOWE-BB	

WELDING PROCEDURE SPECIFICATION

PQR ELDERLEE#3

Material Specification	A500 GR B to A572 GR 50
Welding Process	FCAW-G
Manual or Machine	SEMAUTOMATIC
Position of Welding	FLAT/HORIZONTAL
Filler Metal Specification	A5.29
Filler Metal Classification	E81T1-Ni1C-JH4
Flux	N/A
Shielding Gas	CO 2 Dew Point -40DEG F Flow Rate 50CFH
Single or Multiple Pass	SINGLE
Single or Multiple Arc	SINGLE
Welding Current	DC
Polarity	REVERSE ELECTRODE POSITIVE
Welding Progression	STRINGER
Root Treatment	PER D1.5
Preheat and Interpass Temperature	PER D1.5
Postheat Temperature	NONE
Heat Input	Min Max

WELDING PROCEDURE

Pass no.	Electrode size	Welding Current Amperes	Welding Current Volts	Travel speed	Joint detail
1	1/16	310	25	11	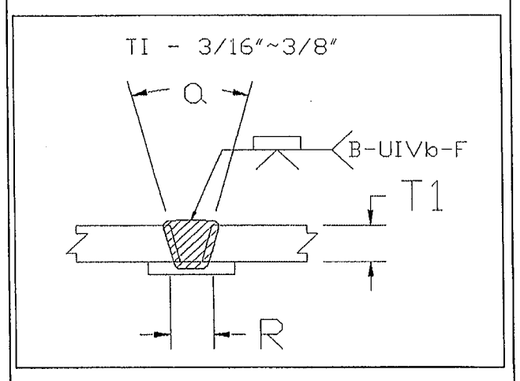
Variable	LIMITS	341 TO 269	27 TO 23	12 TO 10	

This procedure may vary due to fabrication sequence, fit-up, pass size, etc., within the limitation of variables given in Section 5.

Procedure No.	3007	Contractor	Elderlee, Inc.
Revision No.		Authorized By	RANDY SCOTT
		Date	7/28/2014

WELDING PROCEDURE SPECIFICATION

Material Specification	A572 GR 50
Welding Process	GMAW
Manual or Machine	SEMIAUTOMATIC/ROBOTIC
Position of Welding	FLAT/HORIZONTAL
Filler Metal Specification	A5.18
Filler Metal Classification	L-56 LINCOLN
Flux	N/A
Shielding Gas	90% ARGON /10% CO2 Dew Point -40DEG F Flow Rate 45CFH
Single or Multiple Pass	SINGLE
Single or Multiple Arc	SINGLE
Welding Current	DC
Polarity	REVERSE
Welding Progression	STRINGER
Root Treatment	PER D1.5
Preheat and Interpass Temperature	PER D1.5
Postheat Temperature	NONE
Heat Input	Min _____ Max _____

WELDING PROCEDURE

Pass no.	Electrode size	Welding Current Amperes	Welding Current Volts	Travel speed	Joint detail
	.045	190	22	19	
Variable	LIMITS	171 TO 209	20 TO 24	17 TO 21	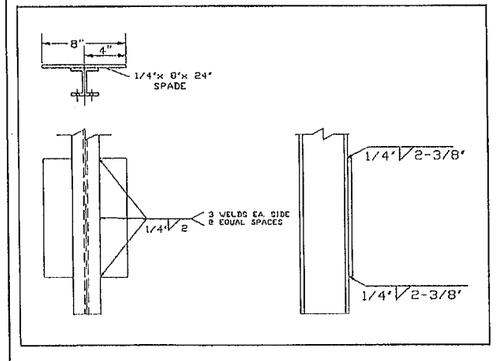

This procedure may vary due to fabrication sequence, fit-up, pass size, etc., within the limitation of variables given in Section 5.

Procedure No. 3022

Revision No. _____

Contractor Elderlee, Inc.

Authorized By RANDY SCOTT

Date 3/20/2014