VERMONT

State of Vermont
PDD/Structures Design Section
National Life Building – Drawer 33
Montpelier, VT 05633-5001
www.aot.state.vt.us

[phone] 802-828-01611
[fax] 802-828-3566
[ttd] 800-253-0191

Agency of Transportation

January 15, 2016

CCS Constructors, Inc.
138 Munson Avenue
Morrisville, VT 05661

Project Name: New Haven BRF 0183(1)

Structure Identification: TH 2, Bridge 10

The structural steel fabrication drawings associated with Items 506.56 Structural Steel, Curve Plate Girder, Item 900.645 Special Provision (Precast Concrete/Steel Composite Pier Cap), and Item 900.670 Special Provision (Metalizing of Structural Steel), has been reviewed and is being returned herewith.

Please incorporate all review comments and resubmit.

Sincerely,

Todd A. Sumner P.E.
Project Manager

VTrans Working to Get You There
Vermont Agency of Transportation

Casco Bay Steel Structures, Inc.
One Wallace Avenue
South Portland, Maine 04106
Phone: 207.780.6722 Fax: 207.780.6726

For review comments of the metalizing procedure please see supplemental attachment. These comments are provided by Daryl Sargent of Parsons Brinckerhoff.

Project: River Road, Bridge # 10, New Haven, VT
Project No. BRF 0183 (1)
CBSS Job: 645
Subject: Structural Steel Metalizing Procedure

Scope

This procedure is to be used to metalize by use of Thermal Sprayed Coatings (TSC) and seal coat the structural steel on this project in accordance with Item 900.645, "Special Provision (Metalizing of Structural Steel)".

Industry Specifications

1. Joint Standard NACE No. 12 / AWS C2.23 / SSPC-CS 23.00
2. AWS C2.25; Specifications for Solid and Composite Wires for TSC
3. ASTM D3951; Shipping and Storage of Metalizing Wire
4. SSPC PA 2; Measurement of Dry Coating Thickness with Magnetic Gages
5. SSPC SP 5 / NACE No.1; White Metal Blast Cleaning
6. ASTM D4541; Standard Test Method for Pull-Off Strength of Coatings

Material

1. TSC shall be Plattzinc Alloy 302, 99.99% Pure Zinc Wire (Attached).
2. Seal Coat shall be Carboline Carbothane 130 Clear Coat or Sherwin-Williams ArmorSeal Rexthane I MCU. Data Sheets and MSDS to be provided for the selected product.
3. Blast Media shall be 100% steel grit. Type and Brand TBD.

Equipment

1. Equipment includes, but not limited to:
    a. XMT 450 Bridgemaster TMS Unit
    b. 16' x 16' x 120' containment system
    c. (2) 10,000 cfm dust collection systems with self-cleaning filters
    d. Custom pallet system for quick and easy wire change out
    e. 200hp electric compressor
    f. 2,000 gallon air storage tank
    g. Air dryer
    h. Oil trap system
    i. 3 outlet constant flow Schmidt blast pot
    j. 4' root vacuum grit handling and air wash cleaning unit
    k. 16' x 25' x 50' blast room with expandable wall
    l. 20 barrel grit hopper
    m. Hand-held bristle blaster
    n. Multiple 30:1 + spray pumps
    o. Thinner recycling system

Vermont Agency of Transportation
RECEIVED
ON: December 18, 2015
and Checked for
CONFORMANCE
BY: Todd Sumner DATE: 01/15/2016

Casco Bay Steel Structures, Inc.
One Wallace Avenue
South Portland, Maine 04106
Phone: 207.780.6722 Fax: 207.780.6726

Qualifications

1. TSC operations shall be overseen and monitored by Thomas Payeur (NACE Certified Coating Inspector Level 3, Cert No: 3723) of New England Inspection, Inc. Additional third party QC coverage will be brought in as needed.
2. All equipment and operators shall be tested prior to the start of production

Job Reference Standard (JRS)

1. JRS and test samples shall be prepared to qualify TSC operators prior to beginning the project and shall include:
    a. Test Plates:
        i. Shall be 3/8" x 12" x 12" with the same grade of steel as the bridge steel
        ii. Blast profile shall be 3.5-6 mils minimum, using same method and technique as the bridge steel
        iii. Record environmental conditions.
        iv. DFT shall be 8.0 – 12.0 mils
        v. Adhesion shall be measured and recorded at five randomly selected locations per ASTM D4541. Glue shall be Loctite Super Glue Ultragel or similar. The adhesion shall be 500 minimum psi (per Table 3: Minimum Tensile Bond Requirements, ASTM D 4541).
    b. JRS samples
        i. Shall be 3/8" x 24" x 24" with the same grade of steel as the bridge steel
        ii. JRS shall be in conformance with the test plates and shall include the following areas for inspection:
            1. No blast area
            2. Blast profile only area
            3. Blast profile and metalizing area
            4. Blast profile, metalizing and seal coat area
        iii. The JRS shall be used for the visual inspection standards for the project

Steel Surface Requirements

1. Steel shall be blast cleaned to white metal grade per SSPC-SP5 and confirmed by SSPC VIS 1.
2. All flame cut edges shall be ground with a disk wheel or similar to remove the hardened flame cut edge. Corners shall be rounded to a 1/8" radius or beveled edge
3. Blast profile shall be 3.5-6 mils minimum in accordance with ASTM D4417, Method B & C.

Vermont Agency of Transportation
RECEIVED
ON: December 18, 2015
and Checked for
CONFORMANCE
BY: Todd Sumner DATE: 01/15/2016

Casco Bay Steel Structures, Inc.
One Wallace Avenue
South Portland, Maine 04106
Phone: 207.780.6722 Fax: 207.780.6726

TSC Application Methods

1. TSC equipment shall be set up per the manufacturer's instructions and in accordance with the JRS samples.
2. Prior to the start of production every day, five test panels shall be prepared and bent around a cylindrical mandrel to examine the coating for cracking. No seal coat is required for these test panels.
    a. Test panels shall be 2" x 8" x .050"
    b. Test panels shall be bent 180 degrees around a 1/2" diameter mandrel using pneumatic or mechanical methods
    c. Test panels shall be examined visually without magnification
    d. No cracking of TSC is permitted. Acceptance is if there is only minor cracking that cannot be lifted from the steel with a knife blade.
    e. If test panels fail, corrective action shall be taken and repeated until five test panel acceptable results are achieved.
3. Steel surface temperature shall be at least 5 degrees above the dew point of the air temperature and a minimum of 40 degrees.
4. Metalizing shall be applied within 6 hours of the completion of blasting operations. In the event this time is exceeded, the uncoated material shall be brush blasted as needed to re-achieve SSPC-SP5.
5. TSC shall be applied in multiple crossing passes as practical with an average of 2-4 mils per pass approximately 6"-10" away from the steel substrate with an overlap a minimum of 40% on each spray pass to ensure uniform coverage. Manual spraying in a block pattern 2-3 feet square. Thickness shall be built up in multiple layers. Fewer than 2 spray coats overlapping at right angles will not be accepted.
6. DFT shall be 8.0 – 12.0 mils.
    a. For faying areas, the mils shall be 3-4 mils, not exceed 5 mils to meet slip co efficient and creep resistance requirements
    b. If the DFT is too low, additional TSC shall be applied
    c. If the DFT is above 150% more than specified, this area shall be documented by QC and provided to the contractor.
7. TSC inspection shall be performed by QC and QA in accordance with SSPC-PA 2. A minimum of 5 randomly spaced spot measurements per 100 square feet shall be checked.
8. For every 500 square feet of production piece, a "companion" piece shall be blast cleaned and TSC. These "companion" pieces shall be used to test the adhesion of the TSC and shall be in accordance with the JRS. The adhesion tests shall be performed without the seal coat applied. In the event of the "companion" piece fails adhesion, the TSC on the associated production piece shall be tested. If tests on the structure fail, completely remove the failed metalizing and re-metalize.

Vermont Agency of Transportation
RECEIVED
ON: December 18, 2015
and Checked for
CONFORMANCE
BY: Todd Sumner DATE: 01/15/2016

Inaccessible and Concrete Areas

1. Inaccessible areas that cannot be metalized, such as edges behind stiffener copes, shall be prime painted with Carboline 859 or similar organic primer, 3-5 mils DFT.

Seal Coat Application

1. Seal coat shall be applied per the coating manufacturer's recommendations.

Casco Bay Steel Structures, Inc.
One Wallace Avenue
South Portland, Maine 04106
Phone: 207.780.6722 Fax: 207.780.6726

2. Seal coat shall be applied within 8 hours of completion of metallizing.
3. Seal coat DFT shall be achieved in 2 step process. The first step is to apply a "mist coat" that is thinned to the maximum allowable thinning rate per the manufacturer's recommendations. After 20 minutes, a second full coat to be applied at the manufacturer's recommendations. Readings will not be taken on the finished product as no additional build-up is measureable using SSPC-PA 2. The application of the seal coat will be less than the surface roughness of the TSC and difficult to measure.

Inspection Hold Points

1. All work shall be inspected by QC and QA for conformance to project specifications.
2. Minimum production hold points shall be as follows:
    a. JRS sample creation
    b. Immediately following blast cleaning operations
    c. Immediately prior to TSC application
    d. Immediately following TSC application
    e. "Companion" pieces creation
    f. Prior to the application of the seal coat
    g. After completion of all coating applications (Final Inspection)

Handling and Field Touch-up

1. All steel shall be handled with care as to not damage the coating, whether in the shop, shipping or field erection.
2. Coated steel shall be protected with the use of lifting softeners, padded slings or similar.
3. The General Contractor is responsible for field touch-ups using the same level of quality in the field as in the shop coating process.

All blast cleaning and coating operations shall be performed in accordance with this procedure

Vermont Agency of Transportation
RECEIVED
ON: December 18, 2015
and Checked for
CONFORMANCE
BY: Todd Sumner DATE: 01/15/2016

ZINC METALIZING WIRE DATA SHEET

ALLOY # 302

NOMINAL CHEMICAL COMPOSITION

ELEMENT	ALLOY
Fe	.0015%
Cd	.0015%
Pb	.003% MAX
Cu	.004% MAX
Zn	BALANCE

AS MANUFACTURED BY THE PLATT BROS. & CO., WATERBURY, CT USA, PRODUCED TO ASTM B833 (LATEST REV) USING ONLY SPECIAL HIGH GRADE ZINC SLAB MELTED, ROLLED AND DRAWN INTO ZINC WIRE, TO ORDER, COMPLETELY IN THE UNITED STATES BY THE PLATT BROS. & CO., WATERBURY, CT

The Platt Bros. & Co., P.O. Box 1030, Waterbury, CT 06721
Tel: 203 753-4194 Fax: 203 753-9709
www.plattbros.com

Vermont Agency of Transportation
RECEIVED
ON: December 18, 2015
and Checked for
CONFORMANCE
BY: Todd Sumner DATE: 01/15/2016

GENERAL NOTES

CONSTRUCTION SPECIFICATIONS

1. ALL MATERIAL AND CONSTRUCTION TO BE IN ACCORDANCE WITH THE 2011 STATE OF VERMONT AGENCY OF TRANSPORTATION STANDARD SPECIFICATIONS FOR CONSTRUCTION WITH ITS LATEST REVISIONS, AND THE 2012 AASHTO LRFD BRIDGE DESIGN SPECIFICATIONS WITH 2013 REVISIONS.

MATERIAL SPECIFICATIONS

1. ALL STRUCTURAL STEEL TO BE AASHTO M270 (ASTM A709) GRADE 50, UNLESS NOTED.

2. MATERIAL NOTED "T2" ON DETAIL DRAWINGS SHALL BE CHARPY V-NOTCH TESTED IN ACCORDANCE WITH THE REQUIREMENTS OF VERMONT STANDARD SPECIFICATIONS SECTION 714.01.

3. HIGH STRENGTH BOLTS SHALL BE 7/8" DIAMETER, ASTM A325 (TYPE 1) MECHANICALLY GALVANIZED, IN 15/16" DIAMETER HOLES. NUTS SHALL BE A563 (TYPE 1) GRADE C3 MECHANICALLY GALVANIZED, AND WASHERS SHALL BE F436 (TYPE 1) MECHANICALLY GALVANIZED.

   BOLTS, NUTS & WASHERS SHALL BE ROTATIONAL CAPACITY TESTED. DO NOT MIX BOLTS & NUTS FROM DIFFERENT CONTAINERS UNLESS ALL BOLTS & NUTS HAVE THE SAME LOT NUMBER.

FABRICATION

1. ALL HOLES SHALL BE DRILLED FULL SIZE, UNLESS NOTED.

WELDING

1. THE CONFIGURATION OF THE WELD JOINTS AND ALL WELDING PROCEDURES SHALL BE IN ACCORDANCE WITH AASHTO/AWS D1.5-10 BRIDGE WELDING CODE; IN ADDITION TO THE PROVISIONS OF VERMONT STANDARD SPECIFICATIONS SECTION 506.10. ALL WELDING WILL BE DETAILED TO PRE-QUALIFIED JOINTS, UNLESS PROHIBITED BY THE DESIGNER.

2. WELDING OF MAIN LOAD CARRYING MEMBERS AND ATTACHMENTS SHALL BE PERFORMED USING THE AUTOMATIC SUBMERGED ARC & SHIELDED METAL ARC PROCESSES. SUBMERGED ARC WELDS, WHERE USED, ARE SUBJECT TO TESTING REQUIREMENTS OF AWS D1.5, SECTION 5. ALL WELDS ARE CONTINUOUS, UNLESS NOTED.

3. NON-DESTRUCTIVE TESTING OF WELDS SHALL BE IN ACCORDANCE WITH THE REFERENCED SPECIFICATION.

4. SEE DETAIL "WS1" FOR THE WELD TERMINATION DETAIL.

FIELD CONNECTIONS

1. ALL FIELD CONNECTIONS SHALL BE MADE WITH 7/8" DIAMETER HIGH STRENGTH A325 BOLTS, INSTALLED PER SECTION 506.19(b). BOLTED CONNECTIONS SHALL BE INSTALLED USING THE TURN OF NUT METHOD. REFER TO SECTION 506.19 OF THE 2011 GENERAL SPECIAL PROVISIONS.

2. BOLTS SHALL HAVE A HEAVY HEX HEAD, HEAVY HEX NUT, AND AT LEAST ONE HARD FLAT WASHER EACH. WASHER TO BE PLACED UNDER THE TURNED ELEMENT.

3. PIECE MARKS WILL BE LOCATED AS SHOWN ON SHEET E1.

CLEANING

1. ALL STEEL SHALL BE BLAST CLEANED IN ACCORDANCE WITH SSPC=VIS 1 (SSPC-SP5)..

METALLIZING:

CLEANING STRUCTURAL STEEL PRIOR TO METALLIZING:

1) ALL CORNERS EXPOSED IN THE ASSEMBLED PRODUCT SHALL BE ROUNDED TO APPROXIMATELY A 3/32 INCH RADIUS PRIOR TO ABRASIVE BLAST CLEANING. A SERIES OF TANGENTS THAT APPROXIMATE A RADIUS MAY BE CONSIDERED AS A ROUNDED EDGE IF THERE ARE NO SHARP BREAKS.

2) SURFACE PREPARATION PRIOR TO METALLIZING SHALL BE ACCOMPLISHED IN ACCORDANCE WITH THE REQUIREMENTS OF SSPC-SP5 "WHITE METAL BLAST CLEANING".

3) THE BLAST OPERATION SHALL RESULT IN AN ANCHOR PROFILE OF 3.5-4.5 MILS.

4) SILICA SAND OR STEEL SHOT AND OTHER ABRASIVES PRODUCING ROUNDED SURFACE PROFILES SHALL NOT BE USED TO PRODUCE THE ANCHOR PROFILE.

5) THE AVERAGE SURFACE PROFILE WILL BE DETERMINED AT THE BEGINNING OF THE WORK AS REQUIRED BY THE ENGINEER OR ENGINEER'S REPRESENTATIVE, USING PROFILE DEPTH TAPE AND A MICROMETER. SINGLE MEASUREMENTS LESS THAN 3.5 MILS OR GREATER THAN SPECIFIED MAXIMUM FOR THE METALLIZING SYSTEM USED WILL BE CONSIDERED UNACCEPTABLE.

6) PROFILE TAPE AND MEASUREMENTS SHALL BE SUBMITTED TO THE ENGINEER FOR RECORD.

7) ALL METALLIZING SHALL OCCUR WITHIN 6 HOURS OF COMPLETION OF BLAST CLEANING.

APPLICATION AND MATERIALS:

1) ALL STRUCTURAL STEEL, EXCEPT AS NOTED SHALL BE METALIZED AND SEAL COATED PER SECTION NUMBERS 94-106 OF THE SPECIAL PROVISION "METALLIZING OF STRUCTURAL STEEL" AND THE FABRICATOR APPROVED METALLIZING PROCEDURE. △1

SUBMITTAL REVIEW

Review is only for general conformity to the contract drawings and specifications and shall not relieve the contractor of his entire responsibility under the contract, including among other things, dimensions to be confirmed and correlated at the job site, and information that pertains to the fabrication processes or to techniques of construction.

- ☐ NO EXCEPTIONS TAKEN
- ☐ MAKE CORRECTIONS NOTED
  RESUBMITTAL NOT REQUIRED
- ☑ AMEND AND RESUBMIT
- ☐ REJECTED - SEE REMARKS

PB AMERICAS, INC.
BY: Robert Gaber
DATE: 1/11/16

Vermont Agency of Transportation
RECEIVED
ON: December 18, 2015
and Checked for
CONFORMANCE
BY: Todd Sumner DATE: 01/15/2016

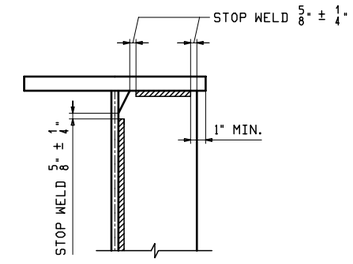

DETAIL "WS1"
STIFF. WELD TERMINATION

WELD PROCEDURE

THE FOLLOWING CASCO WELDING PROCEDURES SHALL BE USED:

WELD DESCRIPTION	MAT'L GRADE	WP	CASCO WELD PROC.
GIRDER FLANGE TO WEB FILLET WELDING	M270 GR50	WP1	201
GIRDER STIFFENER TO WEB FILLET WELDING	M270 GR50	WP2	250
GIRDER STIFFENER TO FLANGE FILLET WELDING	M270 GR50	WP3	470 or 480
ALL OTHER FILLET WELDS	M270 GR50	WP4	470 or 610

DTI'S are required

Why are these options? perhaps this should be WPS 470 for both of these without the other options

NOTE TO ENGINEER:
THESE NOTES ARE NOT INTENDED TO BE ALL INCLUSIVE AND COMPLIANCE WITH RELEVANT SPECIFICATIONS REMAIN UNCHANGED.

REV.	DATE	REMARKS	DWN	CHK	APVL	SHOP
△1	12/9	APPROVAL COMMENTS	LWD	WJL		
0						

MATERIAL: | SURFACE PREP. & PAINT: | HOLES: | SHOP BOLTS:

DESCRIPTION: GENERAL NOTES

CASCO BAY STEEL STRUCTURES, INC.
1 WALLACE AVE. SOUTH PORTLAND, ME 04106
PHONE (207) 780-6722 FAX. (207) 780-6726
TENSOR 3354

STRUCTURE: TH-2 (RIVER ROAD) BRIDGE #10 COUNTY OF ADDISON

DRAWN: LWD	DATE: 10/20		
CHKD: WJL	DATE: 10/27		
LOCATION: TOWN OF NEW HAVEN, VT	JOB NO.	DWG NO.	
PROJ NO. BRF 0183 (1)	645	GN1	
CUSTOMER: CCS CONSTRUCTORS, INC.		REV. △1	

WJL Mon, Dec 14, 2015 10:20:09 AM /users/pbw/3354(GN1 Rev)

Wrong direction?

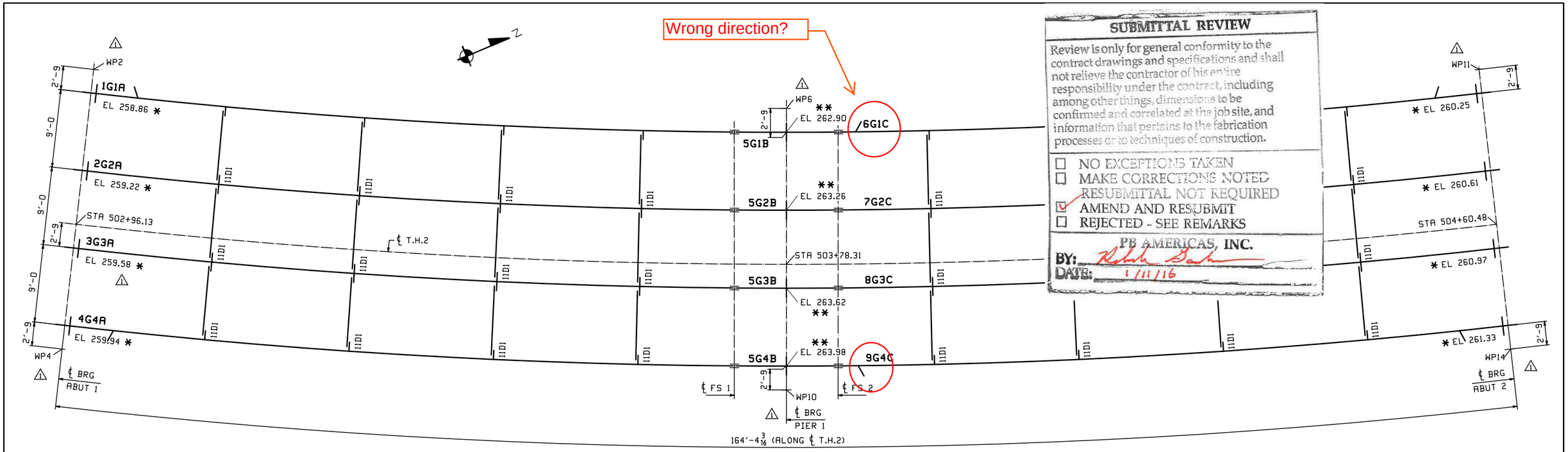

SUBMITTAL REVIEW

Review is only for general conformity to the contract drawings and specifications and shall not relieve the contractor of his entire responsibility under the contract, including among other things, dimensions to be confirmed and correlated at the job site, and information that pertains to the fabrication processes or to techniques of construction.

- ☐ NO EXCEPTIONS TAKEN
- ☐ MAKE CORRECTIONS NOTED
- RESUBMITTAL NOT REQUIRED
- ☑ AMEND AND RESUBMIT
- ☐ REJECTED - SEE REMARKS

PB AMERICAS, INC.

BY: Robert Gaber

DATE: 1/11/16

FRAMING PLAN

FIELD BOLT LIST							A325 Type 1 (MECH GALV) BOLTS							
LINE	NO REQ'D.	BOLT DIAM.	BOLT LEN.	BOLTS /CONN.	# OF CONN.	GRIP	THICKNESS OF PCS. CONNECTED						WASH CODE	PIECES CONNECTED AND REMARKS
1														FIELD SPLICE 1 & 2:
2	384	7/8	5	48	8	3 5/8	7/8	1 3/4	1				1	Top Flg Splice
3	448	7/8	3 1/4	56	8	1 7/8	5/8	5/8	5/8				1	Web Splice
4	448	7/8	5 3/4	56	8	4 1/4	1	2	1 1/4				1	Btm Flg Splice
5														
6														INT. DIAPHRAGMS (11D1):
7	576	7/8	2 1/2	12	48	1	1/2	1/2					1	DIAPH. ~ CONN. PL
8														

WASHER CODES

1: 1 Hard Flat Washer

FIELD BOLT SUMMARY			2% + 2 ADDED, MIN. 6 EXTRA			
LINE	NO. OF BOLTS	BOLT DIAM.	TYPE	BOLT LEN	ACTUAL COUNT	REMARKS
1	590	7/8	A325 Type 1	2 1/2	576	(MECH GALV) RCT
2	459	7/8	↑	3 1/4	448	(MECH GALV) RCT
3	394	7/8	↓	5	384	(MECH GALV) RCT
4	459	7/8	A325 Type 1	5 3/4	448	(MECH GALV) RCT
5						
6	1902	Hard Flat Washers for 7/8 ø BOLT				(ACTUAL 1856) (MECH GALV) RCT
7						
8						
9						

Note to purchaser: At least 2 full sets of bolts will be required for the multiple setups.

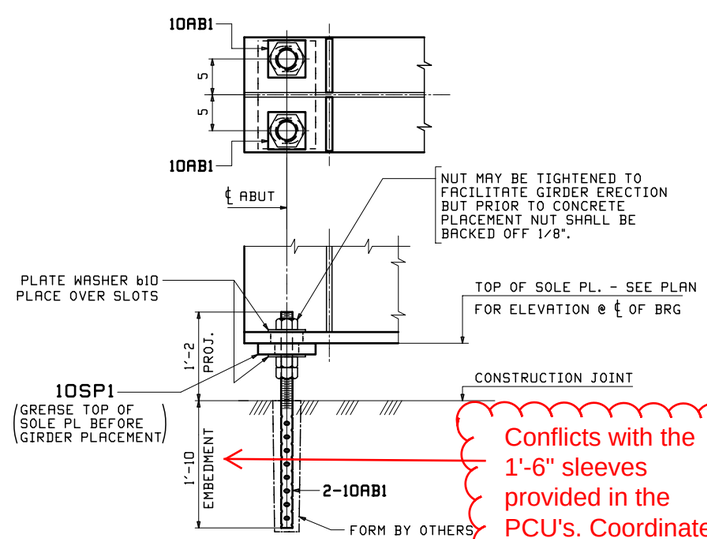

ELEV @ ABUT 1 (SHOWN)
ELEV @ ABUT 2 (SIMILAR)

Conflicts with the 1'-6" sleeves provided in the PCU's. Coordinate with precaster.

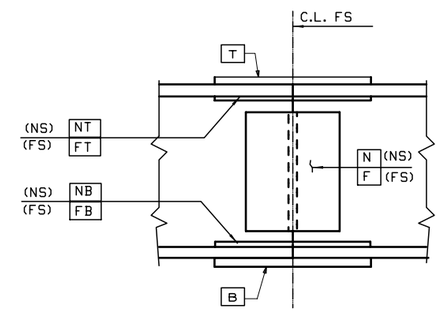

SHOP MATCH MARKING SCHEME

SHOP TO PREFIX MATCH-MARKS WITH LINE MARK AND SPLICE

EXAMPLE 1 A B

LINE — FIELD SPLICE — PART IDEN.

NOTE *
ELEVATIONS ARE TAKEN AT TOP OF SOLE PLATE @ ℄ OF ABUT

NOTE **
ELEVATIONS ARE TAKEN AT TOP OF TOP FLANGE @ ℄ OF PIER

NOTE:
SEE DESIGN SHEET 27 OF 67 FOR COORDINATES OF WP2, WP4, WP6, WP10, WP11, AND WP14.

Vermont Agency of Transportation

RECEIVED

ON: December 18, 2015

and Checked for

CONFORMANCE

BY: Todd Sumner DATE: 01/15/2016

REV.	DATE	REMARKS	DWN	CHK	APVL	SHOP
1	12/1	APPROVAL COMMENTS CORRECT BOLT LENGTH	LWD	WJL		
0						

MATERIAL: | SURFACE PREP. & PAINT: | HOLES: | SHOP BOLTS:

DESCRIPTION: FRAMING & ANCHOR BOLT PLAN AND FIELD BOLTS

CASCO BAY STEEL STRUCTURES, INC.
1 WALLACE AVE. SOUTH PORTLAND, ME 04106
PHONE (207) 780-6722 FAX. (207) 780-6726
TENSOR 3354

STRUCTURE: TH-2 (RIVER ROAD) BRIDGE #10 COUNTY OF ADDISON

DRAWN: LWD DATE: 10/19
CHKD: WJL DATE: 10/27

LOCATION: TOWN OF NEW HAVEN, VT
PROJ NO. BRF 0183 (1)
CUSTOMER: CCS CONSTRUCTORS, INC.

JOB NO. 645
DWG NO. E1
REV. 1

WJL Mon, Dec 14, 2015 10:51:57 AM /users/jobs/3354/E1 - Revi

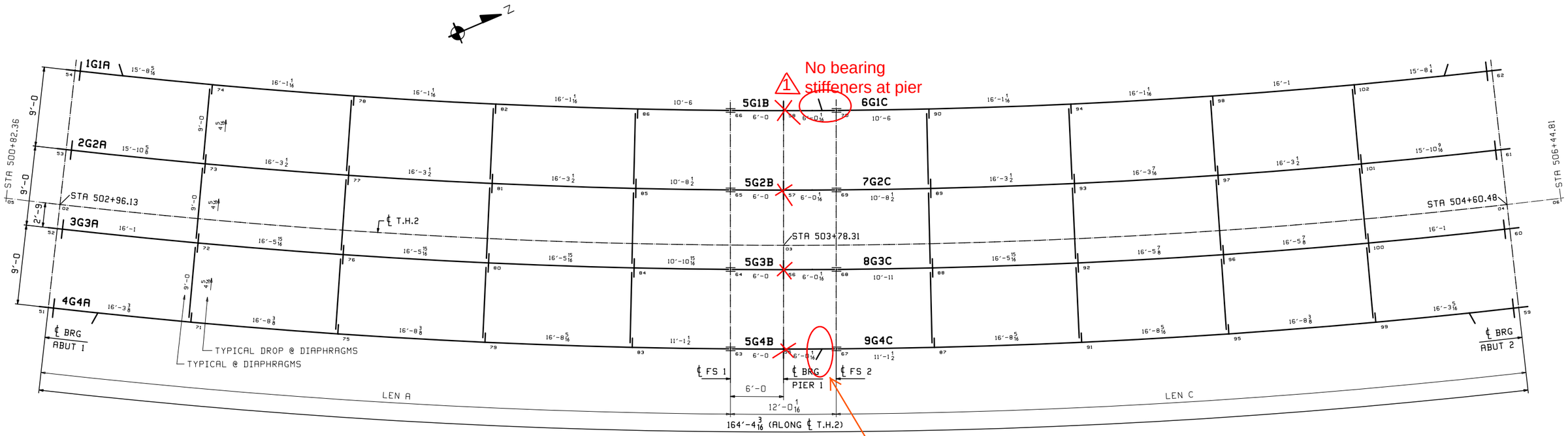

CALCULATION PLAN

Drip bars on the wrong side of the connection??

Vermont Agency of Transportation

RECEIVED

ON: December 18, 2015

and Checked for

CONFORMANCE

BY: Todd Sumner DATE: 01/15/2016

1 1/11 Engineers Review RJG

Line	LEN A	LEN C	ABUT 1	PIER 1	ABUT 2
1	74'-5 1/2	74'-5 3/8	0.0217	0.0086	-.0044
2	75'-5 5/8	75'-5 1/2	0.0215	0.0085	-.0044
3	76'-5 3/4	76'-5 11/16	0.0212	0.0084	-.0043
4	77'-5 15/16	77'-5 13/16	0.0209	0.0083	-.0043

SUBMITTAL REVIEW

Review is only for general conformity to the contract drawings and specifications and shall not relieve the contractor of his entire responsibility under the contract, including among other things, dimensions to be confirmed and correlated at the job site, and information that pertains to the fabrication processes or to techniques of construction.

- ☐ NO EXCEPTIONS TAKEN
- ☐ MAKE CORRECTIONS NOTED
- RESUBMITTAL NOT REQUIRED
- ☑ AMEND AND RESUBMIT
- ☐ REJECTED - SEE REMARKS

PB AMERICAS, INC.

BY: Rebecca Barber

DATE: 1/11/16

** NOTE **
THE PURPOSE OF THIS DRAWING IS TO COORDINATE GEOMETRIC CONTROL INFORMATION. THIS DWG IS SUBMITTED FOR INFORMATION ONLY AND IS NOT INTENDED FOR SHOP FABRICATION.

CALCULATION PLAN NOTES:
1. LONGITUDINAL DIMENSIONS ARE SLOPING ALONG BTM OF WEB WITH CORRECTIONS MADE FOR DL CAMBER, V.C. & GRADE (UN).
2. TRANSVERSE DIMENSIONS ARE IN A HORIZONTAL PLANE (UN).
3. ARROW POINTS TOWARD LOW END OF MEMBER.
4. ENDS OF GIRDERS AND BRG. STIFF'S ARE VERTICAL AFTER DL ROTATION.
5. INT. DIAPHRAGMS AND FIELD SPLICES ARE NORMAL TO GRADE.
6. BOTTOM POINT NUMBERS = TOP POINT NUMBERS + 200
7. FOR LAYOUTS SEE "TD" DRAWING.

REV.	DATE	REMARKS	DWN	CHK	APVL	SHOP
0						

MATERIAL: | SURFACE PREP. & PAINT: | HOLES: AS NOTED | SHOP BOLTS: NONE

DESCRIPTION: CALCULATION PLAN

CASCO BAY STEEL STRUCTURES, INC.
1 WALLACE AVE.
SOUTH PORTLAND, ME 04106
PHONE (207) 780-6722
FAX. (207) 780-6726
TENSOR 3354

STRUCTURE: TH-2 (RIVER ROAD) BRIDGE #10 COUNTY OF ADDISON

DRAWN: LWD DATE: 10/19
CHKD: WJL DATE: 10/27

LOCATION: TOWN OF NEW HAVEN, VT
PROJ NO. BRF 0183 (1)
CUSTOMER: CCS CONSTRUCTORS, INC.

JOB NO. 645
DWG NO. WS1
REV. △

WJL Thu, Oct 29, 2015 02:54:59 PM /users/jobs/3354/WS1 | Rev0

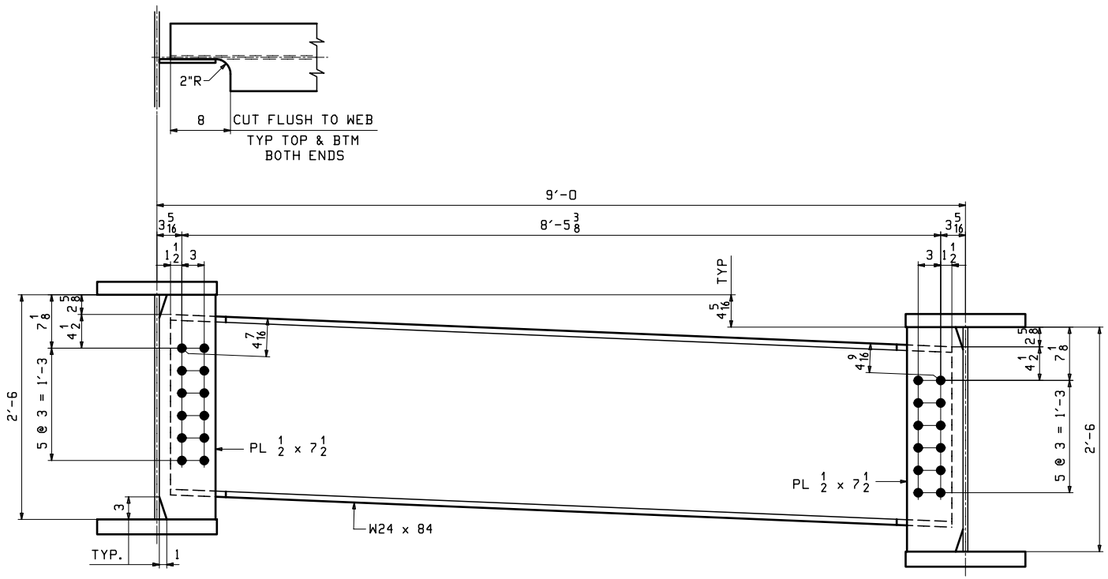

TYPICAL DIAPHRAGM

LOOKING BACKSTATION TYPICAL

Vermont Agency of Transportation

RECEIVED

ON: December 18, 2015

and Checked for

CONFORMANCE

BY: Todd Sumner DATE: 01/15/2016

SUBMITTAL REVIEW

Review is only for general conformity to the contract drawings and specifications and shall not relieve the contractor of his entire responsibility under the contract, including among other things, dimensions to be confirmed and correlated at the job site, and information that pertains to the fabrication processes or to techniques of construction.

- ☐ NO EXCEPTIONS TAKEN
- ☐ MAKE CORRECTIONS NOTED
- RESUBMITTAL NOT REQUIRED
- ☑ AMEND AND RESUBMIT
- ☐ REJECTED - SEE REMARKS

PB AMERICAS, INC.

BY: Robert Barber

DATE: 1/11/16

NOTES:

1. ALL MATERIAL SHALL BE M270-50T2.
2. ALL HOLES SHALL BE 15/16 Ø.
3. ALL BOLTS SHALL BE 7/8 Ø A325-1. (GALV.)

**** NOTE ****
THE PURPOSE OF THIS DRAWING IS TO COORDINATE GEOMETRIC CONTROL INFORMATION AND CONNECTION SPACING. THIS DWG IS SUBMITTED FOR INFORMATION ONLY & IS NOT INTENDED FOR SHOP FABRICATION. DETAIL DWGS WILL SHOW ALL WELDING AND DIMENSIONS REQ'D FOR FABRICATION.

REV.	DATE	REMARKS	DWN	CHK	APVL	SHOP
0						

MATERIAL:	SURFACE PREP. & PAINT:	HOLES:	SHOP BOLTS:
AS NOTED	SEE GN1	AS NOTED	NONE

DESCRIPTION: TYPICAL LAYOUTS

CASCO BAY STEEL STRUCTURES, INC.
1 WALLACE AVE. PHONE (207) 780-6722
SOUTH PORTLAND, ME 04106 FAX. (207) 780-6726
TENSOR 3354

STRUCTURE: TH-2 (RIVER ROAD)
BRIDGE #10
COUNTY OF ADDISON

DRAWN: LWD	DATE: 10/19
CHKD: WJL	DATE: 10/27

LOCATION:	TOWN OF NEW HAVEN, VT	JOB NO.	DWG NO.
PROJ NO.	BRF 0183 (1)	645	TD1
CUSTOMER:	CCS CONSTRUCTORS, INC.		REV. △

WJL Thu, Oct 29, 2015 01:35:57 PM /users/jobs/3354/TD1.Rev0

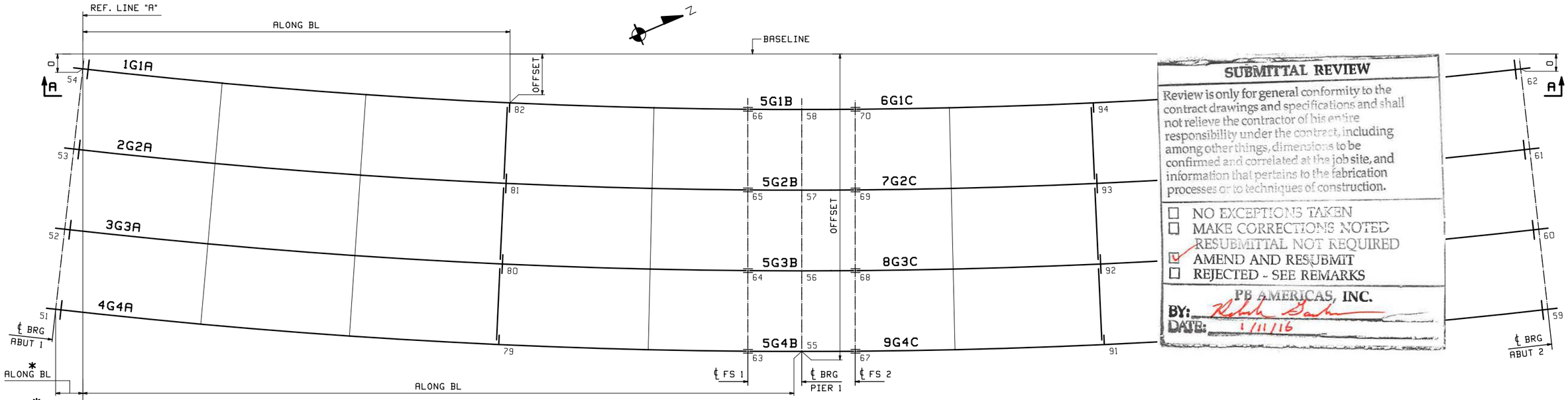

ASSEMBLY PLAN

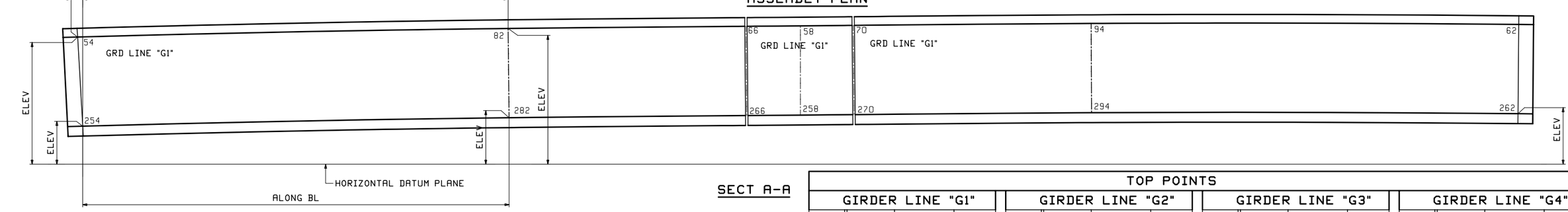

SECT A-A

BOTTOM POINTS

GIRDER LINE "G1"				GIRDER LINE "G2"				GIRDER LINE "G3"				GIRDER LINE "G4"			
POINT	OFFSET	ALONG BL	ELEV	POINT	OFFSET	ALONG BL	ELEV	POINT	OFFSET	ALONG BL	ELEV	POINT	OFFSET	ALONG BL	ELEV
254	0	0	1'-0	253	8'-11 5/16	* -1'-0 1/8	1'-4 5/16	252	17'-10 5/8	* -2'-0 1/4	1'-8 5/8	251	26'-9 15/16	* -3'-0 3/8	2'-0 15/16
282	3'-9 3/8	47'-8 7/16	1'-11 5/16	281	12'-9 1/4	47'-3 1/2	2'-3 3/4	280	21'-9 1/8	46'-10 9/16	2'-8 3/16	279	30'-9	46'-5 5/8	3'-0 1/2
266	4'-6	74'-3 3/8	2'-2 1/4	265	13'-6	74'-3 3/8	2'-6 9/16	264	22'-6	74'-3 3/8	2'-10 15/16	263	31'-6	74'-3 3/8	3'-3 1/4
258	4'-6 1/4	80'-3 3/8	2'-2 13/16	257	13'-6 1/4	80'-3 3/8	2'-7 1/8	256	22'-6 1/4	80'-3 3/8	2'-11 7/16	255	31'-6 1/4	80'-3 3/8	3'-3 13/16
270	4'-6	86'-3 3/8	2'-3 1/2	269	13'-6	86'-3 3/8	2'-7 13/16	268	22'-6	86'-3 3/8	3'-0 1/8	267	31'-6	86'-3 7/16	3'-4 7/16
294	3'-9 3/8	112'-10 5/16	2'-6	293	12'-9 1/4	113'-3 1/4	2'-10 1/2	292	21'-9 1/8	113'-8 3/16	3'-2 7/8	291	30'-9	114'-1 1/8	3'-7 3/16
262	0	160'-6 3/4	2'-4 11/16	261	8'-11 5/16	161'-6 7/8	2'-9	260	17'-10 5/8	162'-7	3'-1 5/16	259	26'-9 15/16	163'-7 1/8	3'-5 11/16

TOP POINTS

GIRDER LINE "G1"				GIRDER LINE "G2"				GIRDER LINE "G3"				GIRDER LINE "G4"			
POINT	OFFSET	ALONG BL	ELEV	POINT	OFFSET	ALONG BL	ELEV	POINT	OFFSET	ALONG BL	ELEV	POINT	OFFSET	ALONG BL	ELEV
54	0	* -1/8	3'-6	53	8'-11 5/16	* -1'-0 1/4	3'-10 5/16	52	17'-10 5/8	* -2'-0 7/16	4'-2 5/8	51	26'-9 15/16	* -3'-0 9/16	4'-6 15/16
82	3'-9 3/8	47'-8 1/16	4'-5 5/16	81	12'-9 1/4	47'-3 1/8	4'-9 3/4	80	21'-9 1/8	46'-10 1/4	5'-2 3/16	79	30'-9	46'-5 5/16	5'-6 1/2
66	4'-6	74'-3 1/8	4'-8 1/4	65	13'-6	74'-3 1/8	5'-0 9/16	64	22'-6	74'-3 1/8	5'-4 15/16	63	31'-6	74'-3 1/8	5'-9 1/4
58	4'-6 1/4	80'-3 3/8	4'-8 13/16	57	13'-6 1/4	80'-3 3/8	5'-1 1/8	56	22'-6 1/4	80'-3 3/8	5'-5 7/16	55	31'-6 1/4	80'-3 3/8	5'-9 13/16
70	4'-6	86'-3 1/8	4'-9 1/2	69	13'-6	86'-3 1/8	5'-1 13/16	68	22'-6	86'-3 1/8	5'-6 1/8	67	31'-6	86'-3 1/8	5'-10 7/16
94	3'-9 3/8	112'-10 3/16	5'-0	93	12'-9 1/4	113'-3 1/16	5'-4 1/2	92	21'-9 1/8	113'-8	5'-8 7/8	91	30'-9 1/16	114'-0 15/16	6'-1 3/16
62	0	160'-6 7/8	4'-10 11/16	61	8'-11 5/16	161'-7	5'-3	60	17'-10 5/8	162'-7 3/16	5'-7 5/16	59	26'-9 15/16	163'-7 5/16	5'-11 11/16

Vermont Agency of Transportation
RECEIVED
ON: December 18, 2015
and Checked for
CONFORMANCE
BY: Todd Sumner DATE: 01/15/2016

SUBMITTAL REVIEW
Review is only for general conformity to the contract drawings and specifications and shall not relieve the contractor of his entire responsibility under the contract, including among other things, dimensions to be confirmed and correlated at the job site, and information that pertains to the fabrication processes or to techniques of construction.
☐ NO EXCEPTIONS TAKEN
☐ MAKE CORRECTIONS NOTED
RESUBMITTAL NOT REQUIRED
☑ AMEND AND RESUBMIT
☐ REJECTED - SEE REMARKS
PB AMERICAS, INC.
BY: Rebecca Baker
DATE: 1/11/16

REV.	DATE	REMARKS	DWN	CHK	APVL	SHOP
0						

MATERIAL: | SURFACE PREP. & PAINT: | HOLES: | SHOP BOLTS:

DESCRIPTION: SHOP ASSEMBLY

CASCO BAY STEEL STRUCTURES, INC.
1 WALLACE AVE.
SOUTH PORTLAND, ME 04106
PHONE (207) 780-6722
FAX. (207) 780-6726
TENSOR 3354

STRUCTURE: TH-2 (RIVER ROAD) BRIDGE #10 COUNTY OF ADDISON
DRAWN: LWD DATE: 10/23
CHKD: WJL DATE: 10/27
LOCATION: TOWN OF NEW HAVEN, VT
JOB NO. 645
DWG NO. SA1
PROJ NO. BRF 0183 (1)
CUSTOMER: CCS CONSTRUCTORS, INC.
REV. △

WJL Thu, Oct 29, 2015 01:47:26 PM /users/jobs/3354/SA1 | Rev0

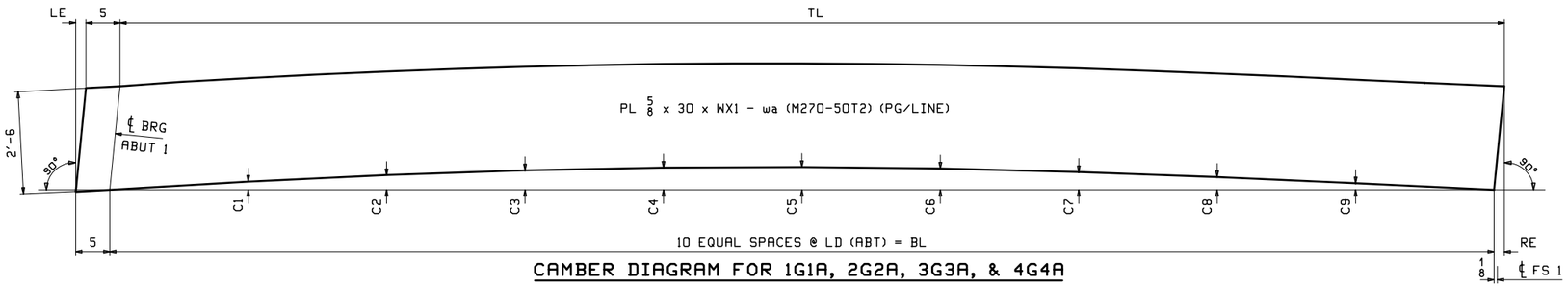

CAMBER DIAGRAM FOR 1G1A, 2G2A, 3G3A, & 4G4A

MARK	TL	BL	LE	RE	WX1	LD	C1	C2	C3	C4	C5	C6	C7	C8	C9	PG/LINE
1G1A	74'-5 1/4	74'-5 3/8	5/16	3/16	74'-10 9/16	7'-5 5/16	7/8	1 9/16	2 1/16	2 3/8	2 7/16	2 1/4	1 15/16	1 3/8	11/16	2/C
2G2A	75'-5 7/16	75'-5 1/2	5/16	1/4	75'-10 3/4	7'-6 9/16	15/16	1 11/16	2 1/4	2 9/16	2 5/8	2 7/16	2 1/16	1 7/16	3/4	2/A
3G3A	76'-5 5/8	76'-5 5/8	5/16	5/16	76'-10 15/16	7'-7 3/4	1	1 3/4	2 5/16	2 5/8	2 11/16	2 1/2	2 1/8	1 1/2	3/4	1/Y
4G4A	77'-5 3/4	77'-5 13/16	5/16	1/4	77'-11 1/16	7'-9	15/16	1 11/16	2 1/4	2 5/8	2 11/16	2 1/2	2 1/8	1 1/2	3/4	1/W

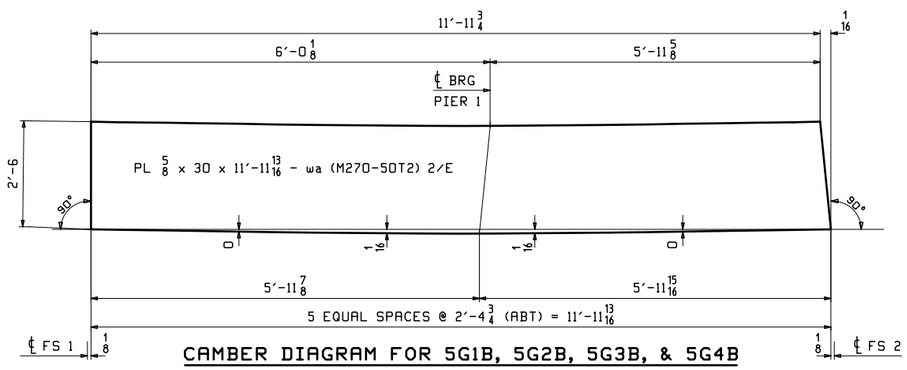

CAMBER DIAGRAM FOR 5G1B, 5G2B, 5G3B, & 5G4B

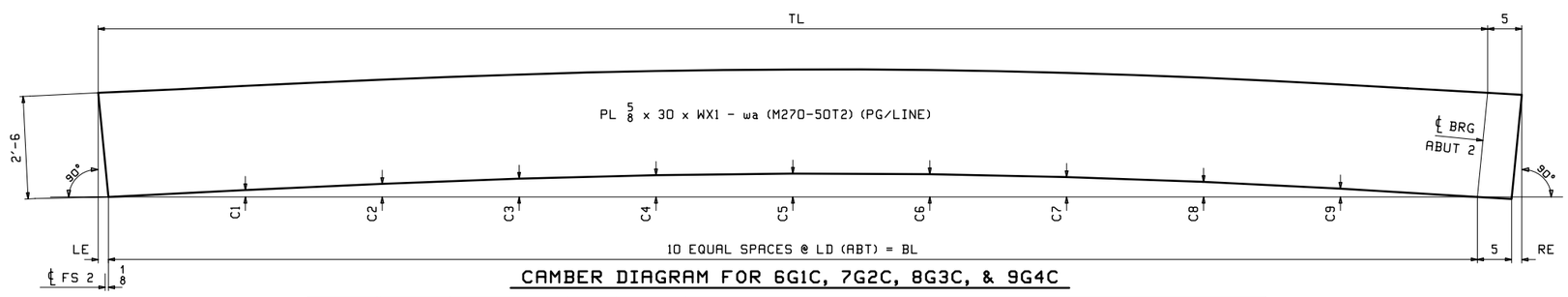

CAMBER DIAGRAM FOR 6G1C, 7G2C, 8G3C, & 9G4C

MARK	TL	BL	LE	RE	WX1	LD	C1	C2	C3	C4	C5	C6	C7	C8	C9	PG/LINE
6G1C	74'-5 11/16	74'-5 1/4	1/4	3/16	74'-10 11/16	7'-5 5/16	11/16	1 3/8	1 7/8	2 1/4	2 3/8	2 5/16	2 1/16	1 9/16	7/8	2/C
7G2C	75'-5 13/16	75'-5 3/8	1/4	3/16	75'-10 13/16	7'-6 9/16	3/4	1 7/16	2	2 3/8	2 9/16	2 1/2	2 3/16	1 11/16	15/16	2/A
8G3C	76'-6	76'-5 9/16	1/4	3/16	76'-11	7'-7 3/4	3/4	1 7/16	2 1/16	2 1/2	2 11/16	2 5/8	2 5/16	1 3/4	15/16	1/Y
9G4C	77'-6 1/8	77'-5 11/16	1/4	3/16	77'-11 1/8	7'-9	3/4	1 1/2	2 1/16	2 1/2	2 5/8	2 9/16	2 1/4	1 11/16	15/16	1/W

SUBMITTAL REVIEW

Review is only for general conformity to the contract drawings and specifications and shall not relieve the contractor of his entire responsibility under the contract, including among other things, dimensions to be confirmed and correlated at the job site, and information that pertains to the fabrication processes or to techniques of construction.

- ☐ NO EXCEPTIONS TAKEN
- ☐ MAKE CORRECTIONS NOTED RESUBMITTAL NOT REQUIRED
- ☑ AMEND AND RESUBMIT
- ☐ REJECTED - SEE REMARKS

PB AMERICAS, INC.
BY: [signature]
DATE: 1/11/16

NOTES:

FOR GENERAL NOTES SEE DRAWING GN1.
T2 - DENOTES MATERIAL SUBJECT TO CHARPY V-NOTCH TEST FOR ZONE 2.

Vermont Agency of Transportation
RECEIVED
ON: December 18, 2015
and Checked for
CONFORMANCE
BY: Todd Sumner DATE: 01/15/2016

REV.	DATE	REMARKS	DWN	CHK	APVL	SHOP
0						

MATERIAL:	SURFACE PREP. & PAINT:	HOLES:	SHOP BOLTS:
M270-50 T2	SEE GN1	NONE	NONE

DESCRIPTION: CAMBER DIAGRAM

CASCO BAY STEEL STRUCTURES, INC.
1 WALLACE AVE. SOUTH PORTLAND, ME 04106
PHONE (207) 780-6722 FAX. (207) 780-6726
TENSOR 3354

STRUCTURE: TH-2 (RIVER ROAD) BRIDGE #10 COUNTY OF ADDISON

DRAWN: LWD	DATE: 10/20		
CHKD: WJL	DATE: 10/27		
LOCATION: TOWN OF NEW HAVEN, VT	JOB NO.	DWG NO.	
PROJ NO. BRF 0183 (1)	645	C1	
CUSTOMER: CCS CONSTRUCTORS, INC.		REV. △	

WJL Thu, Oct 29, 2015 01:51:10 PM /users/jobs/3354/C1 - Rev0

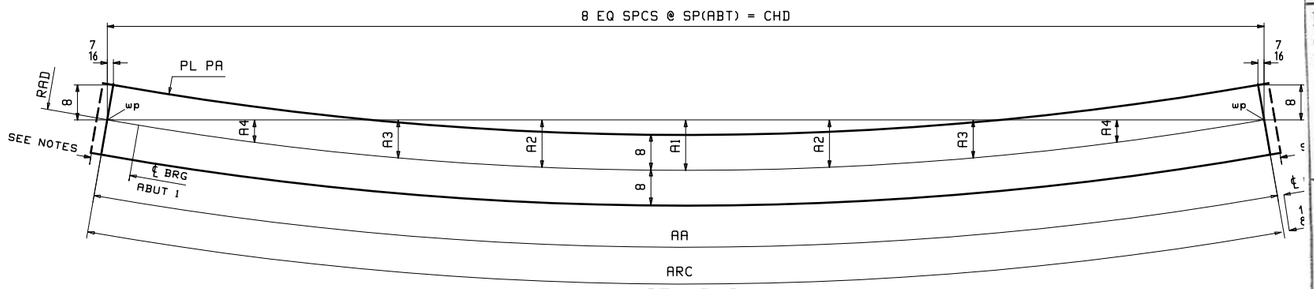

VIEW A-A @ TOP FLG

SECTION B-B @ BTM FLG

LOCATION	RAD	ARC	CHD	AA	A1	A2	A3	A4	SP	PL PA (M270-50T2)
1G1A TOP FLG	714.75	74′-10 1/4	74′-9 7/8	74′-10 1/4	11 3/4	11	8 13/16	5 1/8	9′-4 1/4	PL 1 3/4 x 16-ta (1/S)
1G1A BTM FLG	714.75	74′-10 3/8	74′-9 15/16	74′-10 3/8	11 3/4	11	8 13/16	5 1/8	9′-4 1/4	PL 2 x 16-ba (1/G)
2G2A TOP FLG	723.75	75′-10 7/16	75′-10	75′-10 7/16	11 15/16	11 3/16	8 15/16	5 3/16	9′-5 3/4	PL 1 3/4 x 16-ta (1/Q)
2G2A BTM FLG	723.75	75′-10 1/2	75′-10 1/16	75′-10 1/2	11 15/16	11 3/16	8 15/16	5 3/16	9′-5 3/4	PL 2 x 16-ba (1/E)
3G3A TOP FLG	732.75	76′-10 5/8	76′-10 3/16	76′-10 5/8	1′-0 1/8	11 5/16	9 1/16	5 5/16	9′-7 1/4	PL 1 3/4 x 16-ta (1/N)
3G3A BTM FLG	732.75	76′-10 5/8	76′-10 1/4	76′-10 5/8	1′-0 1/8	11 5/16	9 1/16	5 5/16	9′-7 1/4	PL 2 x 16-ba (1/C)
4G4A TOP FLG	741.75	77′-10 3/4	77′-10 5/16	77′-10 3/4	1′-0 1/4	11 1/2	9 3/16	5 3/8	9′-8 13/16	PL 1 3/4 x 16-ta (1/L)
4G4A BTM FLG	741.75	77′-10 13/16	77′-10 3/8	77′-10 13/16	1′-0 1/4	11 1/2	9 3/16	5 3/8	9′-8 13/16	PL 2 x 16-ba (1/A)

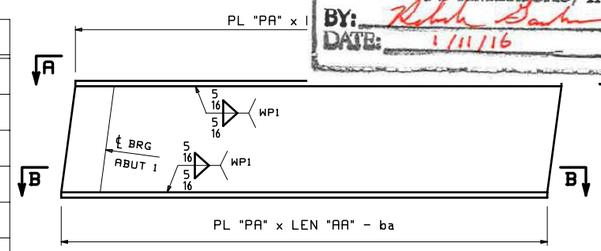

FLANGE DIAGRAM FOR 1G1A, 2G2A, 3G3A & 4G4A

SUBMITTAL REVIEW

Review is only for general conformity to the contract drawings and specifications and shall not relieve the contractor of his entire responsibility under the contract, including among other things, dimensions to be confirmed and correlated at the job site, and information that pertains to the fabrication processes or to techniques of construction.

- ☐ NO EXCEPTIONS TAKEN
- ☐ MAKE CORRECTIONS NOTED
- RESUBMITTAL NOT REQUIRED
- ☑ AMEND AND RESUBMIT
- ☐ REJECTED - SEE REMARKS

PB AMERICAS, INC.

BY: Rebecca Barber

DATE: 1/11/16

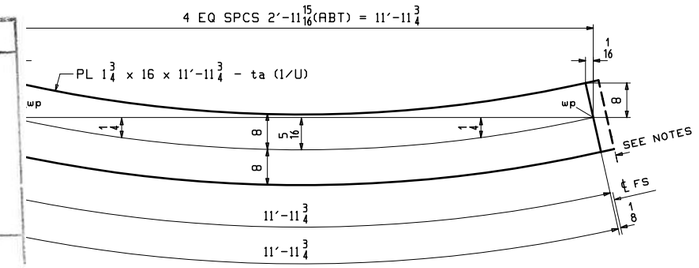

VIEW C-C

LOCATION	RAD
5G1B TOP FLG	714.75
5G2B TOP FLG	723.75
5G3B TOP FLG	732.75
5G4B TOP FLG	741.75

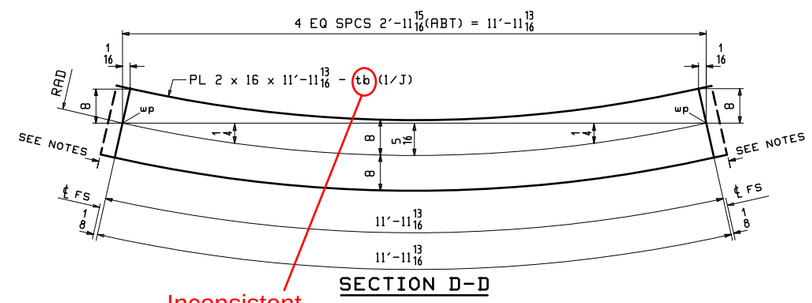

SECTION D-D

Inconsistent Mark

LOCATION	RAD
5G1B BTM FLG	714.75
5G2B BTM FLG	723.75
5G3B BTM FLG	732.75
5G4B BTM FLG	741.75

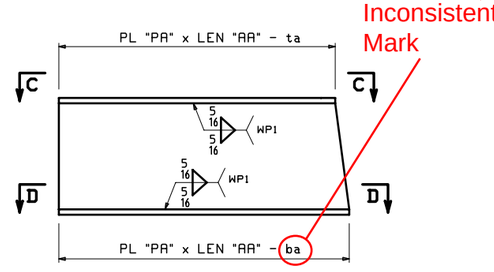

FLANGE DIAGRAM FOR 5G1B, 5G2B, 5G3B & 5G4B

NOTES:

FOR GENERAL NOTES SEE DRAWING GN1.
T2 - DENOTES MATERIAL SUBJECT TO CHARPY V-NOTCH TEST AT H FREQUENCY FOR ZONE 2.
TRIM FLG's AFTER WELDING

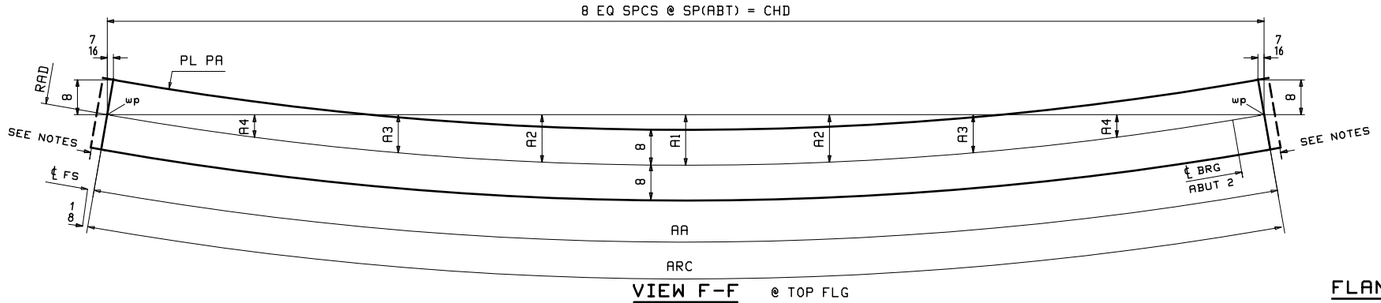

VIEW F-F @ TOP FLG

SECTION G-G @ BTM FLG

LOCATION	RAD	ARC	CHD	AA	A1	A2	A3	A4	SP	PL PA (M270-50T2)
6G1C TOP FLG	714.75	74′-10 11/16	74′-10 1/4	74′-10 11/16	11 3/4	11 1/16	8 13/16	5 1/8	9′-4 1/4	PL 1 3/4 x 16-ta (1/S)
6G1C BTM FLG	714.75	74′-10 1/4	74′-9 13/16	74′-10 1/4	11 3/4	11	8 13/16	5 1/8	9′-4 1/4	PL 2 x 16-ba (1/G)
7G2C TOP FLG	723.75	75′-10 13/16	75′-10 7/16	75′-10 13/16	11 15/16	11 3/16	8 15/16	5 1/4	9′-5 13/16	PL 1 3/4 x 16-ta (1/Q)
7G2C BTM FLG	723.75	75′-10 3/8	75′-10	75′-10 3/8	11 15/16	11 3/16	8 15/16	5 1/4	9′-5 3/4	PL 2 x 16-ba (1/E)
8G3C TOP FLG	732.75	76′-11	76′-10 9/16	76′-11	1′-0 1/8	11 3/8	9 1/16	5 5/16	9′-7 5/16	PL 1 3/4 x 16-ta (1/N)
8G3C BTM FLG	732.75	76′-10 9/16	76′-10 1/8	76′-10 9/16	1′-0 1/8	11 5/16	9 1/16	5 5/16	9′-7 1/4	PL 2 x 16-ba (1/C)
9G4C TOP FLG	741.75	77′-11 1/8	77′-10 11/16	77′-11 1/8	1′-0 1/4	11 1/2	9 3/16	5 3/8	9′-8 13/16	PL 1 3/4 x 16-ta (1/L)
9G4C BTM FLG	741.75	77′-10 11/16	77′-10 1/4	77′-10 11/16	1′-0 1/4	11 1/2	9 3/16	5 3/8	9′-8 13/16	PL 2 x 16-ba (1/A)

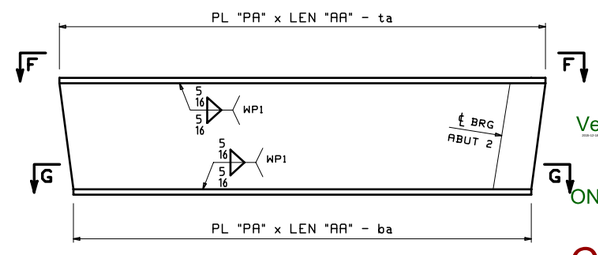

FLANGE DIAGRAM FOR 6G1C, 7G2C, 8G3C & 9G4C

Vermont Agency of Transportation

RECEIVED

ON: December 18, 2015

and Checked for

CONFORMANCE

BY: Todd Sumner DATE: 01/15/2016

REV.	DATE	REMARKS	DWN	CHK	APVL	SHOP
0						

MATERIAL:	SURFACE PREP. & PAINT:	HOLES:	SHOP BOLTS:
M270-50 T2	SEE GN1	NONE	NONE

DESCRIPTION: FLANGE DIAGRAM

CASCO BAY STEEL STRUCTURES, INC.
1 WALLACE AVE. SOUTH PORTLAND, ME 04106
PHONE (207) 780-6722 FAX. (207) 780-6726
TENSOR 3354

STRUCTURE: TH-2 (RIVER ROAD) BRIDGE #10 COUNTY OF ADDISON

DRAWN: LWD DATE: 10/20

CHKD: WJL DATE: 10/27

LOCATION: TOWN OF NEW HAVEN, VT JOB NO. 645 DWG NO. F1

PROJ NO. BRF 0183 (1)

CUSTOMER: CCS CONSTRUCTORS, INC. REV. △

WJL Thu, Oct 29, 2015 03:28:33 PM /users/pbw/3354-f1.rev0

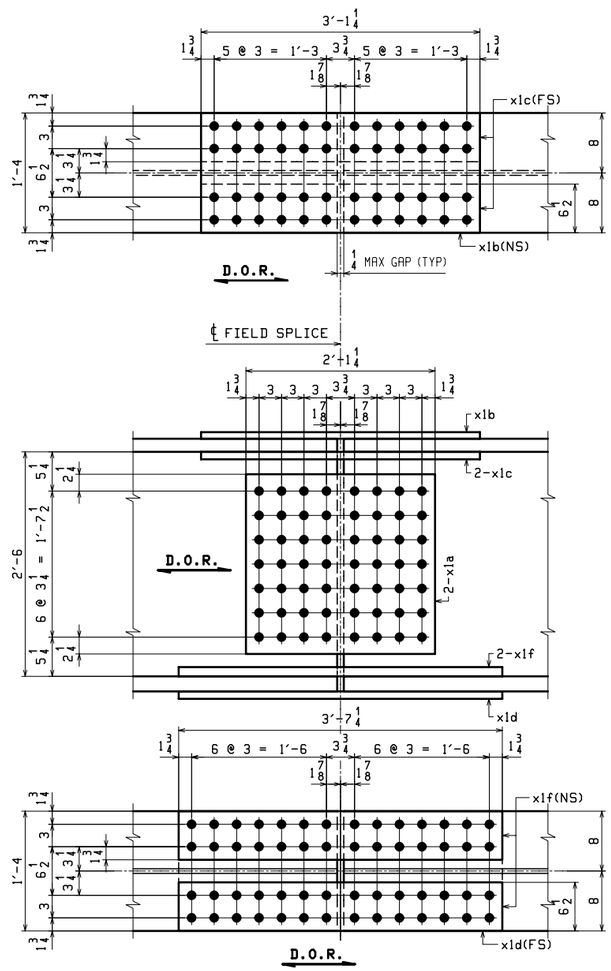

8 ~ FIELD SPLICE DETAIL ~ X1M1

(FS1 & FS2 - GIRDERS 1 THROUGH 4)

ABM INFO		SHIP	BILL OF MATERIAL					JOB NO. 645	DRAWING NO. X1	REV.
PAGE	LINE	MARK	QTY	MARK	MATERIAL	LENGTH FT	LENGTH INCHES	REMARKS	WT	PROCUREMENT NOTES
		X1M1	8		FIELD SPLICE DETAIL				896	
3	C		16	x1a	PL 5/8x24	2	1 1/4	Web Spl M270-50T2	107	
3	D		8	x1b	PL 7/8x16	3	1 1/4	Top Spl M270-50T2	148	
3	E		16	x1c	PL 1x6 1/2	3	1 1/4	Top In M270-50T2	69	
3	F		8	x1d	PL 1x16	3	7 1/4	Bot Spl M270-50T2	196	
3	G		16	x1f	PL 1 1/4x6 1/2	3	7 1/4	Bot In M270-50T2	100	

Vermont Agency of Transportation

RECEIVED

ON: December 18, 2015

and Checked for

CONFORMANCE

BY: Todd Sumner DATE: 01/15/2016

NOTES:

1. FOR GENERAL NOTES SEE DRAWING GN1.
2. HOLES IN SPLICE PLATES ARE PRE-DRILLED. ENDS OF GIRDERS ARE DRILLED FROM SOLID USING SPLICE PLATES AS A TEMPLATE.
3. D.O.R. DENOTES DIRECTION OF MILL ROLLING.
4. T2 - DENOTES CHARPY V-NOTCH TESTING REQUIRED.
5. HOLES ARE 15/16 ø FOR 7/8 ø H.S.B.

SUBMITTAL REVIEW

Review is only for general conformity to the contract drawings and specifications and shall not relieve the contractor of his entire responsibility under the contract, including among other things, dimensions to be confirmed and correlated at the job site, and information that pertains to the fabrication processes or to techniques of construction.

- ☐ NO EXCEPTIONS TAKEN
- ☐ MAKE CORRECTIONS NOTED RESUBMITTAL NOT REQUIRED
- ☑ AMEND AND RESUBMIT
- ☐ REJECTED - SEE REMARKS

PB AMERICAS, INC.

BY: Rebecca Bach

DATE: 1/11/16

REV.	DATE	REMARKS	DWN	CHK	APVL	SHOP
0						

MATERIAL:	SURFACE PREP. & PAINT:	HOLES:	SHOP BOLTS:
M270-50 T2	SEE GN1	AS NOTED	NONE

DESCRIPTION: GIRDER STANDARD DETAILS

CASCO BAY STEEL STRUCTURES, INC.
1 WALLACE AVE. SOUTH PORTLAND, ME 04106
PHONE (207) 780-6722 FAX. (207) 780-6726
TENSOR 3354

STRUCTURE: TH-2 (RIVER ROAD) BRIDGE #10 COUNTY OF ADDISON

DRAWN:	DATE:
LWD	10/21
CHKD:	DATE:
WJL	10/27

LOCATION:	TOWN OF NEW HAVEN, VT	JOB NO.	DWG NO.
PROJ NO.	BRF 0183 (1)	645	X1
CUSTOMER:	CCS CONSTRUCTORS, INC.		REV.

WJL Thu, Oct 29, 2015 03:28:50 PM /users/jobs/2354/X1;Rev0

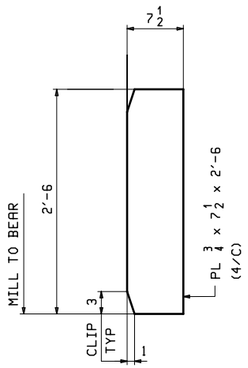

16 - BRG STIFFENERS ~ x2a

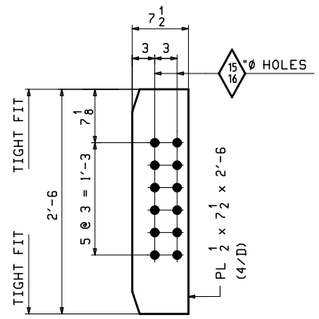

48 - CONN STIFFENERS ~ x2b

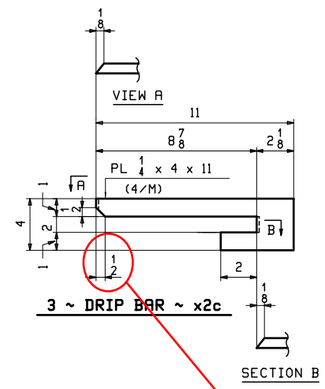

3 ~ DRIP BAR ~ x2c

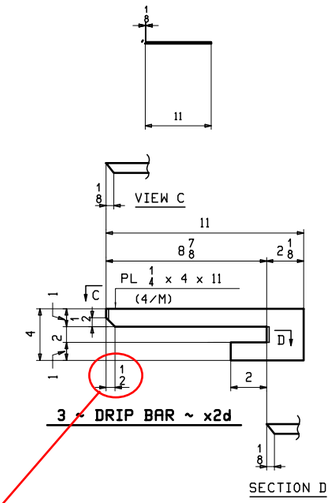

3 ~ DRIP BAR ~ x2d

Note that flange to web weld leg size is 5/16". If anticipating tight fit, adjust size shown here.

Vermont Agency of Transportation

RECEIVED

ON: December 18, 2015

and Checked for

CONFORMANCE

BY: Todd Sumner DATE: 01/15/2016

SUBMITTAL REVIEW

Review is only for general conformity to the contract drawings and specifications and shall not relieve the contractor of his entire responsibility under the contract, including among other things, dimensions to be confirmed and correlated at the job site, and information that pertains to the fabrication processes or to techniques of construction.

- ☐ NO EXCEPTIONS TAKEN
- ☐ MAKE CORRECTIONS NOTED
- RESUBMITTAL NOT REQUIRED
- ☑ AMEND AND RESUBMIT
- ☐ REJECTED - SEE REMARKS

PB AMERICAS, INC.

BY: Robert Gaskin

DATE: 1/11/16

NOTES:

1. FOR GENERAL NOTES SEE DRAWING GN1.
2. "T2" DENOTES MATERIAL SUBJECT TO CHARPY V-NOTCH TESTING.

REV.	DATE	REMARKS	DWN	CHK	APVL	SHOP
0						

MATERIAL:	SURFACE PREP. & PAINT:	HOLES:	SHOP BOLTS:
M270-50T2 UN	SEE GN1	AS NOTED	NONE

DESCRIPTION: GIRDER STANDARD DETAILS

CASCO BAY STEEL STRUCTURES, INC.
1 WALLACE AVE. SOUTH PORTLAND, ME 04106
PHONE (207) 780-6722 FAX. (207) 780-6726
TENSOR 3354

STRUCTURE: TH-2 (RIVER ROAD) BRIDGE #10 COUNTY OF ADDISON

DRAWN: LWD	DATE: 10/21		
CHKD: WJL	DATE: 10/27		
LOCATION: TOWN OF NEW HAVEN, VT	JOB NO.	DWG NO.	
PROJ NO. BRF 0183 (1)	645	X2	
CUSTOMER: CCS CONSTRUCTORS, INC.		REV. △	

WJL Thu Oct 29, 2015 03:00:00 PM /users/jobs/3354/02.dwg

ABM INFO		SHIP	BILL OF MATERIAL					JOB NO. 645	DRAWING NO. 1	REV. 1
PAGE	LINE	MARK	QTY	MARK	MATERIAL	LENGTH FT	LENGTH INCHES	REMARKS	WT	PROCUREMENT NOTES
		1G1A	1		GIRDER			METALIZED	20618	
2	C		1	wa	PL $\frac{5}{8}$x30	74	$10\frac{9}{16}$	M270-50T2	4778	
1	S		1	ta	PL $1\frac{1}{2}$x16	74	$10\frac{1}{4}$	M270-50T2	7132	
1	G		1	ba	PL 2x16	74	$10\frac{3}{8}$	M270-50T2	8152	
4	C		2	x2a	PL $\frac{3}{4}$x$7\frac{1}{2}$	2	6	MIE M270-50T2	48	
4	D		4	x2b	PL $\frac{1}{2}$x$7\frac{1}{2}$	2	6	M270-50T2	32	
4	M		1	x2c	PL $\frac{1}{4}$x4	0	11	DRIP BAR A709-50	3	
5	D		250		STUD $\frac{7}{8}$ ø	0	7	STUDS A108	1	

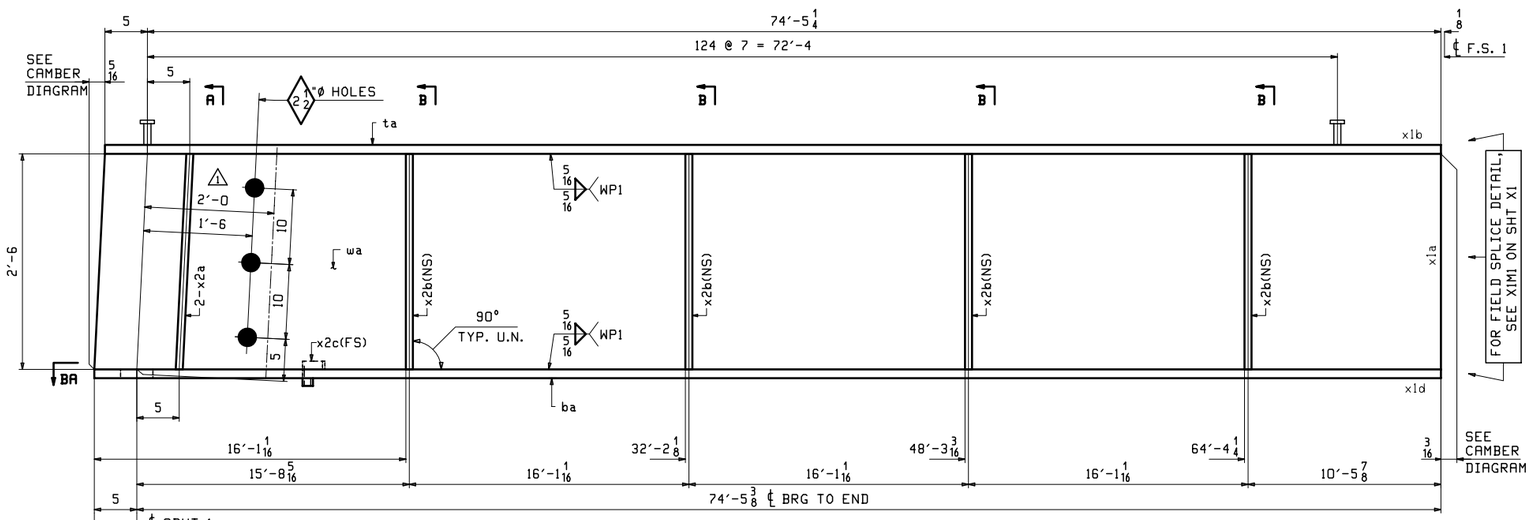

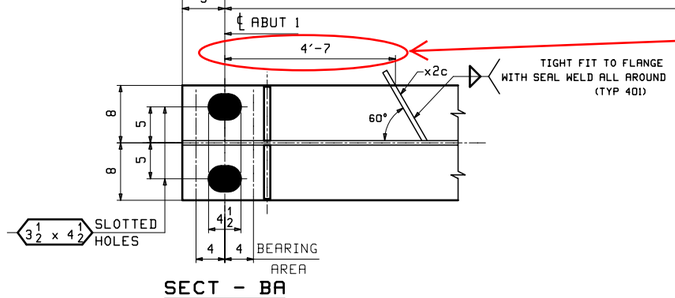

SECT - BA

Leaves 2'-7" from face of abutment.
VTrans standard is 3' from face.

ONE ~ GIRDER ~ 1G1A (DEV.)

NOTES:
1. FOR GENERAL NOTES SEE SHEET GN1.
2. FOR FIELD SPLICE DETAILS SEE SHEET X1.
3. FOR STANDARD DETAILS SEE SHEET X2.
4. FOR CAMBER DIAGRAM SEE SHEET C1.
5. FOR FLANGE DIAGRAM SEE SHEET F1.
6. T2 - DENOTES MATERIAL SUBJECT TO CHARPY V-NOTCH TESTING.

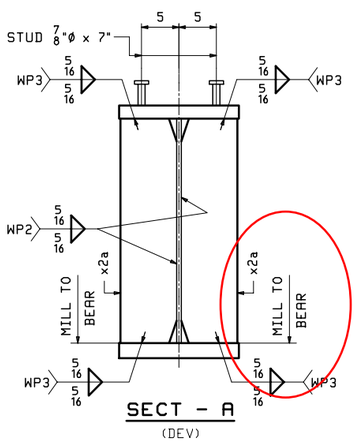

SECT - A
(DEV)

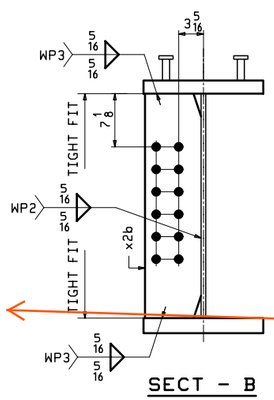

SECT - B

How are the shear studs to be attached?? Perhaps we need a note to say they will be welded with an automatically timed stud gun? or if they are welded with SMAW, they should be detailed to have a fillet weld all the way around the stud. (TYPICAL)

Per definitions in 506 of the VTrans spec book for bearing stiffeners, is this really intended to be a "mill to bear" fit or is "grind to bear" more appropriate?? (TYPICAL)

SUBMITTAL REVIEW

Review is only for general conformity to the contract drawings and specifications and shall not relieve the contractor of his entire responsibility under the contract, including among other things, dimensions to be confirmed and correlated at the job site, and information that pertains to the fabrication processes or to techniques of construction.

- ☐ NO EXCEPTIONS TAKEN
- ☐ MAKE CORRECTIONS NOTED
- RESUBMITTAL NOT REQUIRED
- ☑ AMEND AND RESUBMIT
- ☐ REJECTED - SEE REMARKS

PB AMERICAS, INC.
BY: Robert Barker
DATE: 1/11/16

Vermont Agency of Transportation
RECEIVED
ON: December 18, 2015
and Checked for
CONFORMANCE
BY: Todd Sumner DATE: 01/15/2016

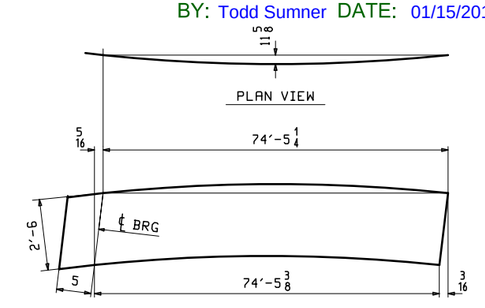

DEV. ORIENTATION DIAGRAM

REV.	DATE	REMARKS	DWN	CHK	APVL	SHOP
1	12/9	APPROVAL COMMENTS	LWD	WJL		
0						

MATERIAL: M270-50T2 UN. | SURFACE PREP. & PAINT: SEE GN1 | HOLES: $\frac{15}{16}$"ø UN. | SHOP BOLTS: NONE

DESCRIPTION: GIRDER - 1G1A

CASCO BAY STEEL STRUCTURES
CASCO BAY STEEL STRUCTURES, INC.
1 WALLACE AVE. SOUTH PORTLAND, ME 04106
PHONE (207) 780-6722 FAX. (207) 780-6726
TENSOR 3354

STRUCTURE: TH-2 (RIVER ROAD) BRIDGE #10 COUNTY OF ADDISON

DRAWN: LWD	DATE: 10/22	
CHKD: WJL	DATE: 10/27	
LOCATION: TOWN OF NEW HAVEN, VT	JOB NO. 645	DWG NO. 1
PROJ NO. BRF 0183 (1)		
CUSTOMER: CCS CONSTRUCTORS, INC.		REV. 1

ABM INFO		SHIP	BILL OF MATERIAL					JOB NO.	DRAWING NO.	REV.
								645	2	1
PAGE	LINE	MARK	QTY	MARK	MATERIAL	LENGTH FT	LENGTH INCHES	REMARKS	WT	PROCUREMENT NOTES
		2G2A	1		GIRDER			METALIZED	21020	
2	A		1	wa	PL $\frac{5}{8}$x30	75	$10\frac{3}{4}$	M270-50T2	4842	
1	Q		1	ta	PL $1\frac{3}{4}$x16	75	$10\frac{7}{16}$	M270-50T2	7229	
1	E		1	ba	PL 2x16	75	$10\frac{1}{2}$	M270-50T2	8262	
4	C		2	x2a	PL $\frac{3}{4}$x$7\frac{1}{2}$	2	6	MIE M270-50T2	48	
4	D		8	x2b	PL $\frac{1}{2}$x$7\frac{1}{2}$	2	6	M270-50T2	32	
5	D		254		STUD $\frac{7}{8}$ ø	0	7	STUDS A108	1	

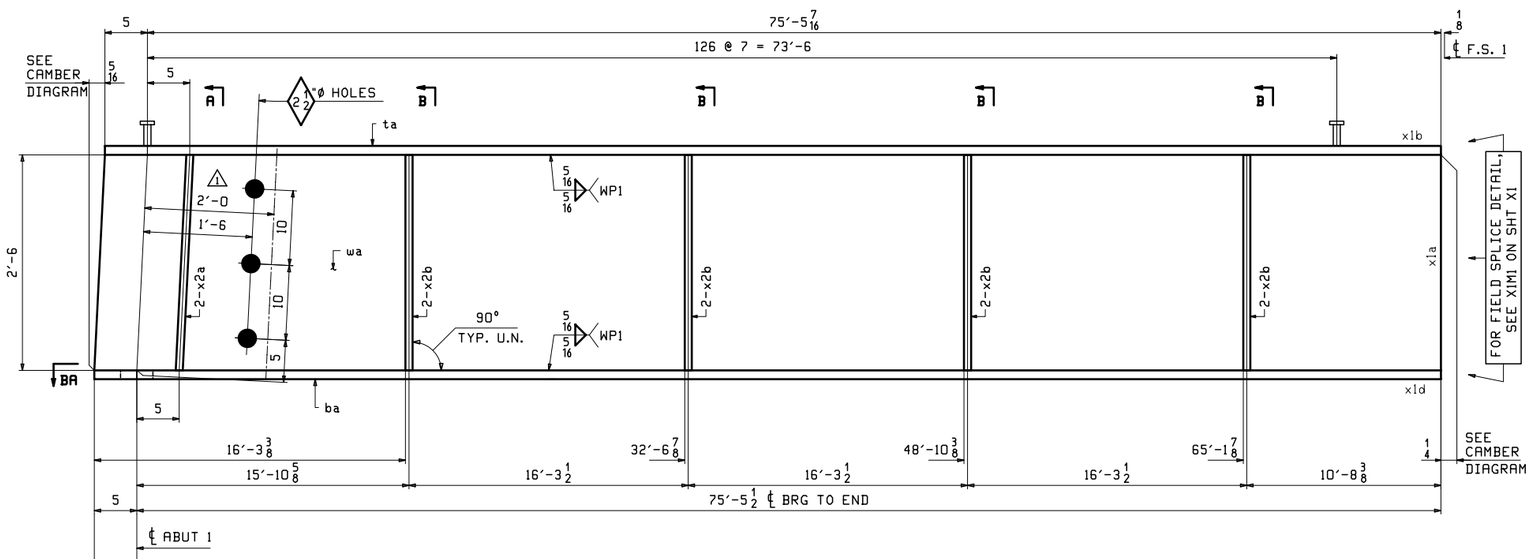

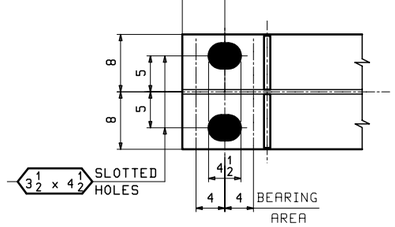

SECT - BA

ONE ~ GIRDER ~ 2G2A(DEV.)

NOTES:
1. FOR GENERAL NOTES SEE SHEET GN1.
2. FOR FIELD SPLICE DETAILS SEE SHEET X1.
3. FOR STANDARD DETAILS SEE SHEET X2.
4. FOR CAMBER DIAGRAM SEE SHEET C1.
5. FOR FLANGE DIAGRAM SEE SHEET F1.
6. T2 - DENOTES MATERIAL SUBJECT TO CHARPY V-NOTCH TESTING.

Vermont Agency of Transportation
RECEIVED
ON: December 18, 2015
and Checked for
CONFORMANCE
BY: Todd Sumner DATE: 01/15/2016

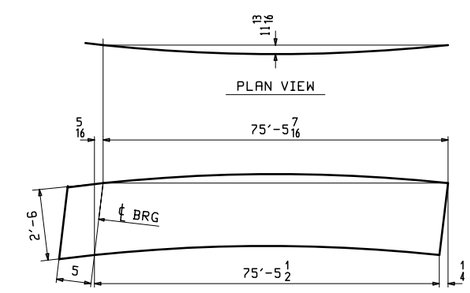

DEV. ORIENTATION DIAGRAM

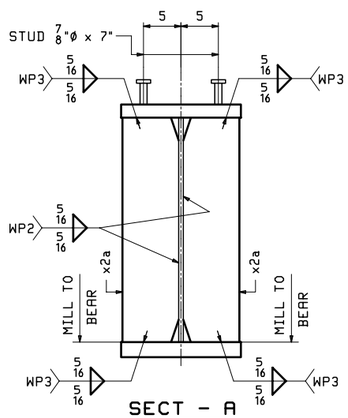

SECT - A
(DEV)

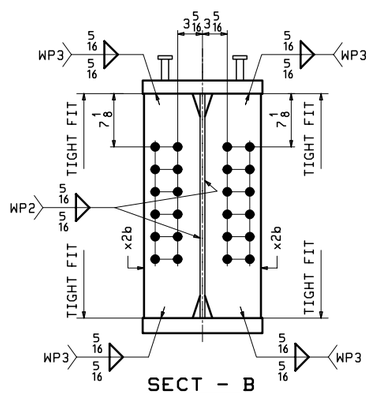

SECT - B

SUBMITTAL REVIEW

Review is only for general conformity to the contract drawings and specifications and shall not relieve the contractor of his entire responsibility under the contract, including among other things, dimensions to be confirmed and correlated at the job site, and information that pertains to the fabrication processes or to techniques of construction.

- ☐ NO EXCEPTIONS TAKEN
- ☐ MAKE CORRECTIONS NOTED
- RESUBMITTAL NOT REQUIRED
- ☑ AMEND AND RESUBMIT
- ☐ REJECTED - SEE REMARKS

PB AMERICAS, INC.
BY: [signature]
DATE: 1/11/16

REV.	DATE	REMARKS	DWN	CHK	APVL	SHOP
1	12/9	APPROVAL COMMENTS	LWD	WJL		
0						

MATERIAL:	SURFACE PREP. & PAINT:	HOLES:	SHOP BOLTS:
M270-50T2 UN.	SEE GN1	$\frac{15}{16}$"ø UN.	NONE

DESCRIPTION: GIRDER - 2G2A

CASCO BAY STEEL STRUCTURES, INC.
1 WALLACE AVE. SOUTH PORTLAND, ME 04106
PHONE (207) 780-6722 FAX. (207) 780-6726
TENSOR 3354

STRUCTURE:	DRAWN:	DATE:
TH-2 (RIVER ROAD) BRIDGE #10 COUNTY OF ADDISON	LWD	10/21
	CHKD: WJL	DATE: 10/27
LOCATION: TOWN OF NEW HAVEN, VT	JOB NO.	DWG NO.
PROJ NO. BRF 0183 (1)	645	2
CUSTOMER: CCS CONSTRUCTORS, INC.		REV. 1

ABM INFO		SHIP	BILL OF MATERIAL					JOB NO.	DRAWING NO.	REV.
								645	3	1
PAGE	LINE	MARK	QTY	MARK	MATERIAL	LENGTH FT	LENGTH INCHES	REMARKS	WT	PROCUREMENT NOTES
		3G3A	1		GIRDER			METALIZED	21297	
1	Y		1	wa	PL $\frac{5}{8}$x30	76	$10\frac{15}{16}$	M270-50T2	4907	
1	N		1	ta	PL $1\frac{1}{2}$x16	76	$10\frac{5}{8}$	M270-50T2	7325	
1	C		1	ba	PL 2x16	76	$10\frac{5}{8}$	M270-50T2	8372	
4	C		2	x2a	PL $\frac{3}{4}$x$7\frac{1}{2}$	2	6	MIE M270-50T2	48	
4	D		8	x2b	PL $\frac{1}{2}$x$7\frac{1}{2}$	2	6	M270-50T2	32	
5	D		258		STUD $\frac{7}{8}$ ø	0	7	STUDS A108	1	

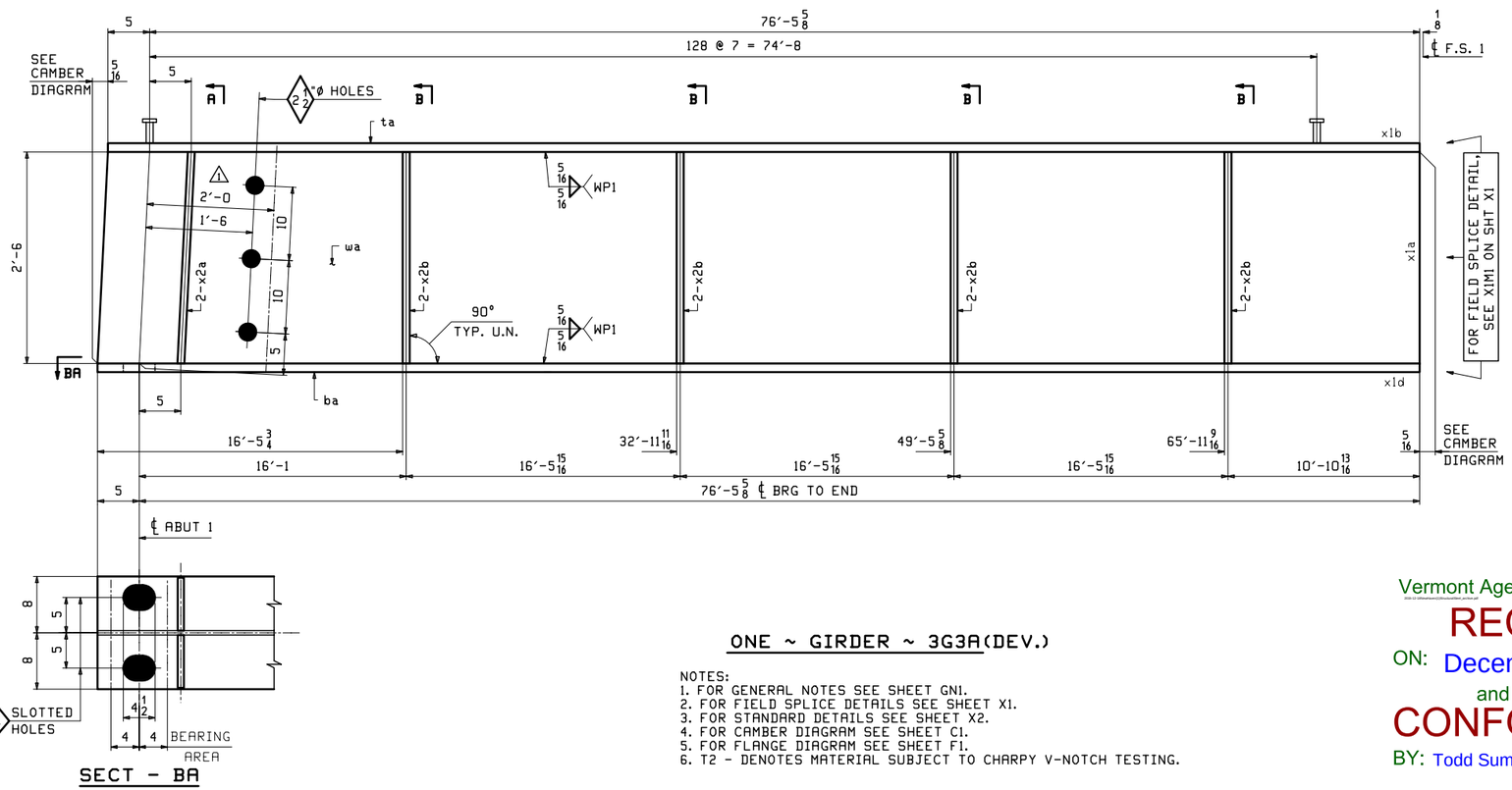

SECT - BA

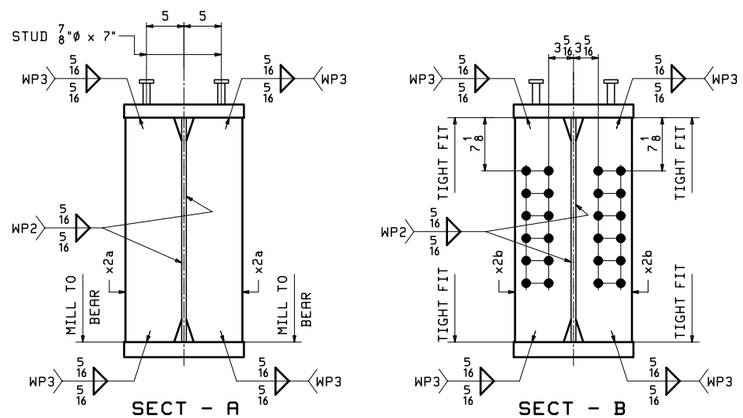

SECT - A (DEV)

SECT - B

ONE ~ GIRDER ~ 3G3A(DEV.)

NOTES:
1. FOR GENERAL NOTES SEE SHEET GN1.
2. FOR FIELD SPLICE DETAILS SEE SHEET X1.
3. FOR STANDARD DETAILS SEE SHEET X2.
4. FOR CAMBER DIAGRAM SEE SHEET C1.
5. FOR FLANGE DIAGRAM SEE SHEET F1.
6. T2 - DENOTES MATERIAL SUBJECT TO CHARPY V-NOTCH TESTING.

Vermont Agency of Transportation
RECEIVED
ON: December 18, 2015
and Checked for
CONFORMANCE
BY: Todd Sumner DATE: 01/15/2016

SUBMITTAL REVIEW

Review is only for general conformity to the contract drawings and specifications and shall not relieve the contractor of his entire responsibility under the contract, including among other things, dimensions to be confirmed and correlated at the job site, and information that pertains to the fabrication processes or to techniques of construction.

- ☐ NO EXCEPTIONS TAKEN
- ☐ MAKE CORRECTIONS NOTED
- RESUBMITTAL NOT REQUIRED
- ☑ AMEND AND RESUBMIT
- ☐ REJECTED - SEE REMARKS

PB AMERICAS, INC.
BY: Robert Bach
DATE: 1/11/16

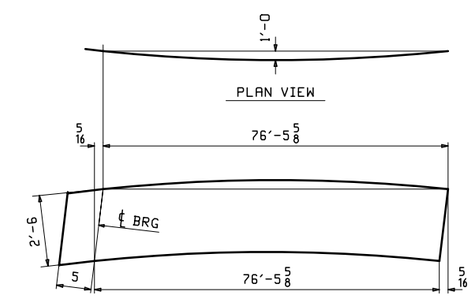

DEV. ORIENTATION DIAGRAM

REV.	DATE	REMARKS	DWN	CHK	APVL	SHOP
1	12/9	APPROVAL COMMENTS	LWD	WJL		
0						

MATERIAL:	SURFACE PREP. & PAINT:	HOLES:	SHOP BOLTS:
M270-50T2 UN.	SEE GN1	$\frac{15}{16}$"ø UN.	NONE

DESCRIPTION: GIRDER - 3G3A

CASCO BAY STEEL STRUCTURES, INC.
1 WALLACE AVE. SOUTH PORTLAND, ME 04106
PHONE (207) 780-6722 FAX. (207) 780-6726
TENSOR 3354

STRUCTURE:	DRAWN:	DATE:
TH-2 (RIVER ROAD) BRIDGE #10 COUNTY OF ADDISON	LWD	10/21
	CHKD: WJL	DATE: 10/27
LOCATION: TOWN OF NEW HAVEN, VT	JOB NO.	DWG NO.
PROJ NO. BRF 0183 (1)	645	3
CUSTOMER: CCS CONSTRUCTORS, INC.		REV. 1

WJL Mon, Dec 14, 2015 10:06:23 AM /users/jobs/3354/3.r.Rev1

ABM INFO PAGE	LINE	SHIP MARK	QTY	MARK	MATERIAL	LENGTH FT	LENGTH INCHES	REMARKS	WT	PROCUREMENT NOTES
		4G4A	1		GIRDER			METALIZED	21449	
1	W		1	wa	PL $\frac{5}{8}$x30	77	$11\frac{1}{16}$	M270-50T2	4972	
1	L		1	ta	PL $1\frac{1}{2}$x16	77	$10\frac{3}{4}$	M270-50T2	7422	
1	A		1	ba	PL 2x16	77	$10\frac{13}{16}$	M270-50T2	8483	
4	C		2	x2a	PL $\frac{3}{4}$x$7\frac{1}{2}$	2	6	MIE M270-50T2	48	
4	D		4	x2b	PL $\frac{1}{2}$x$7\frac{1}{2}$	2	6	M270-50T2	32	
4	M		1	x2d	PL $\frac{1}{4}$x4	0	11	DRIP BAR A709-50	3	
5	D		262		STUD $\frac{7}{8}$ ø	0	7	STUDS A108	1	

JOB NO. 645 — DRAWING NO. 4 — REV. 1

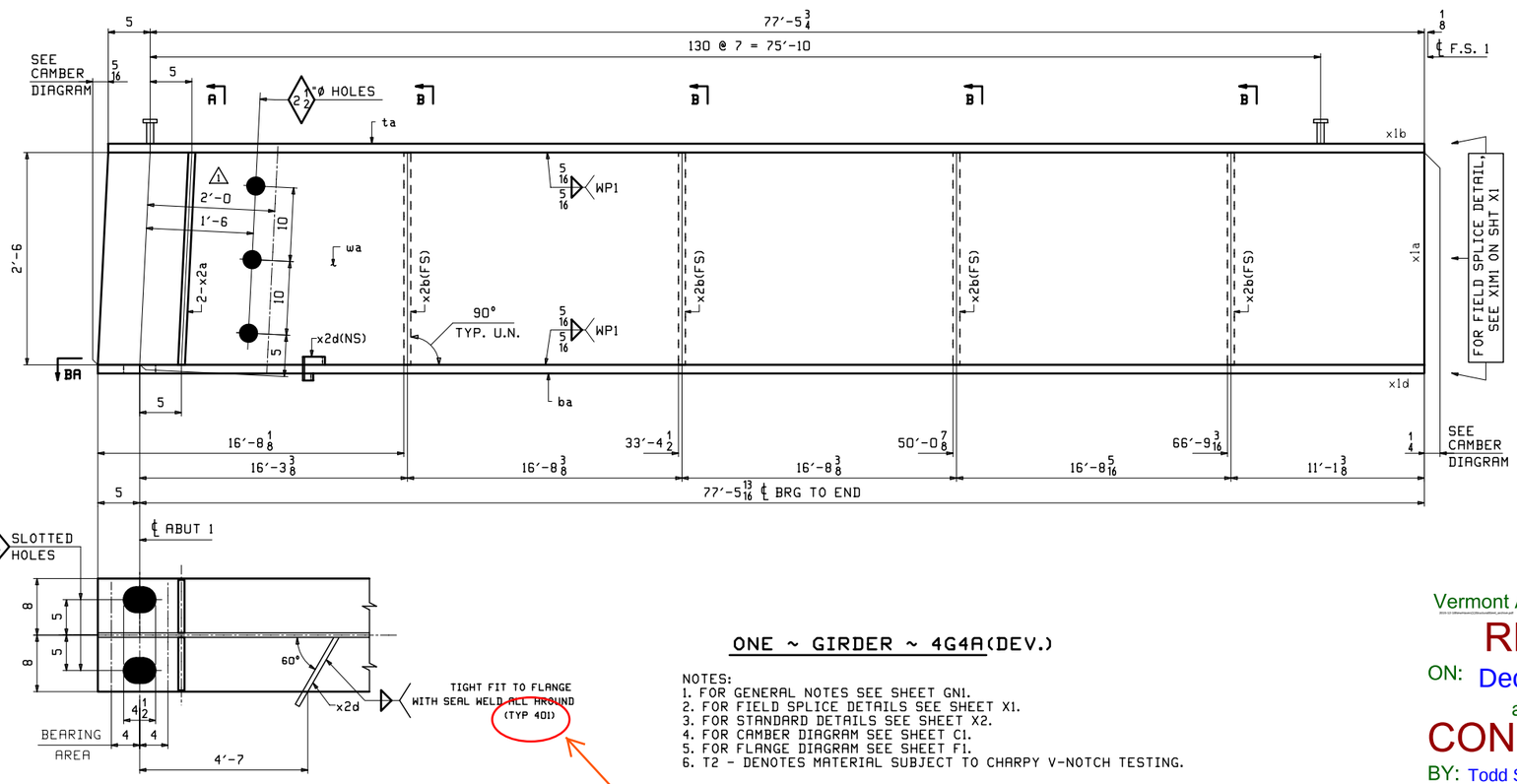

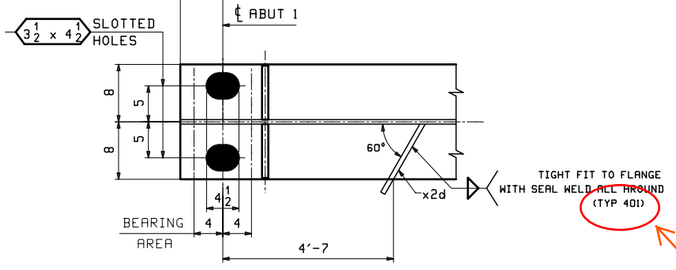

SECT - BA

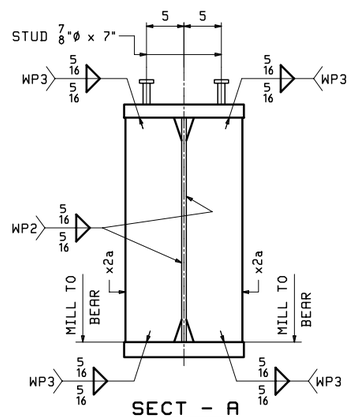

SECT - A
(DEV)

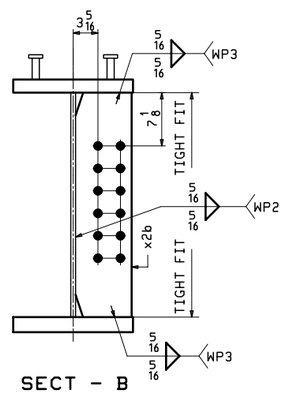

SECT - B

ONE ~ GIRDER ~ 4G4A(DEV.)

NOTES:
1. FOR GENERAL NOTES SEE SHEET GN1.
2. FOR FIELD SPLICE DETAILS SEE SHEET X1.
3. FOR STANDARD DETAILS SEE SHEET X2.
4. FOR CAMBER DIAGRAM SEE SHEET C1.
5. FOR FLANGE DIAGRAM SEE SHEET F1.
6. T2 - DENOTES MATERIAL SUBJECT TO CHARPY V-NOTCH TESTING.

NO WPS 401 included. (TYPICAL)

Vermont Agency of Transportation
RECEIVED
ON: December 18, 2015
and Checked for
CONFORMANCE
BY: Todd Sumner DATE: 01/15/2016

SUBMITTAL REVIEW
Review is only for general conformity to the contract drawings and specifications and shall not relieve the contractor of his entire responsibility under the contract, including among other things, dimensions to be confirmed and correlated at the job site, and information that pertains to the fabrication processes or to techniques of construction.
☐ NO EXCEPTIONS TAKEN
☐ MAKE CORRECTIONS NOTED
RESUBMITTAL NOT REQUIRED
☑ AMEND AND RESUBMIT
☐ REJECTED - SEE REMARKS
PB AMERICAS, INC.
BY: Robert Barb
DATE: 1/11/16

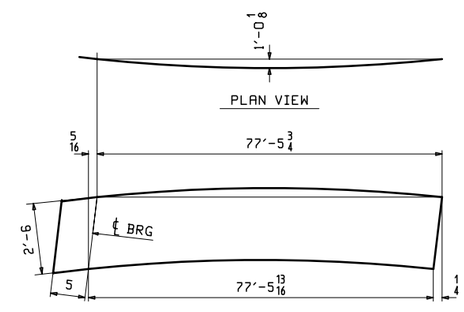

DEV. ORIENTATION DIAGRAM

REV.	DATE	REMARKS	DWN	CHK	APVL	SHOP
1	12/9	APPROVAL COMMENTS	LWD	WJL		
0						

MATERIAL: M270-50T2 UN. — SURFACE PREP. & PAINT: SEE GN1 — HOLES: $\frac{15}{16}$"ø UN. — SHOP BOLTS: NONE

DESCRIPTION: GIRDER - 4G4A

CASCO BAY STEEL STRUCTURES, INC.
1 WALLACE AVE. SOUTH PORTLAND, ME 04106
PHONE (207) 780-6722 FAX. (207) 780-6726
TENSOR 3354

STRUCTURE: TH-2 (RIVER ROAD) BRIDGE #10 COUNTY OF ADDISON

DRAWN: LWD — DATE: 10/21
CHKD: WJL — DATE: 10/27

LOCATION: TOWN OF NEW HAVEN, VT — JOB NO. 645 — DWG NO. 4
PROJ NO. BRF 0183 (1) — REV. 1
CUSTOMER: CCS CONSTRUCTORS, INC.

WJL Mon, Dec 14, 2015 10:57:40 AM /users/jake/3354-4.dwg

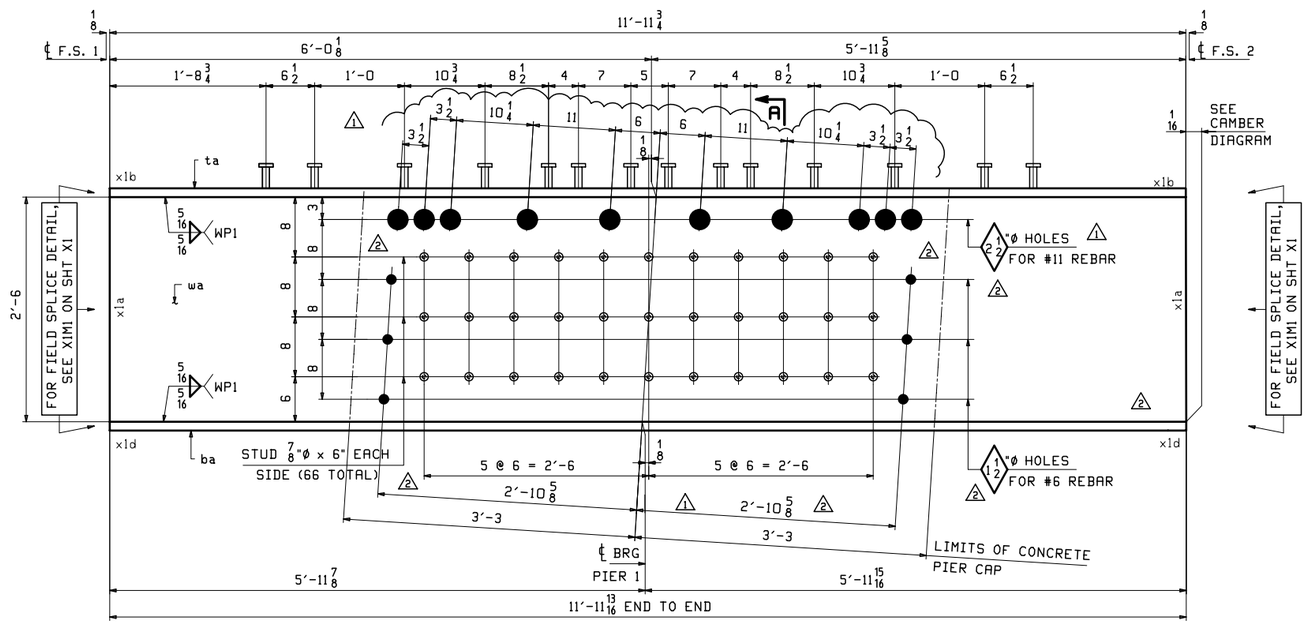

ONE ~ GIRDER ~ 5G1B
ONE ~ GIRDER ~ 5G2B
ONE ~ GIRDER ~ 5G3B
ONE ~ GIRDER ~ 5G4B
ALIKE EXCEPT AS NOTED

NOTES:
1. FOR GENERAL NOTES SEE SHEET GN1.
2. FOR FIELD SPLICE DETAILS SEE SHEET X1.
3. FOR STANDARD DETAILS SEE SHEET X2.
4. FOR CAMBER DIAGRAM SEE SHEET C1.
5. FOR FLANGE DIAGRAM SEE SHEET F1.
6. T2 - DENOTES MATERIAL SUBJECT TO CHARPY V-NOTCH TESTING.

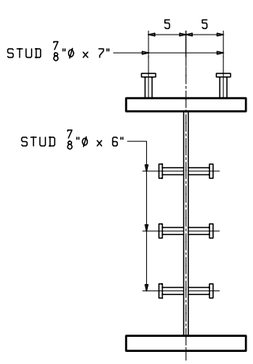

SECT - A

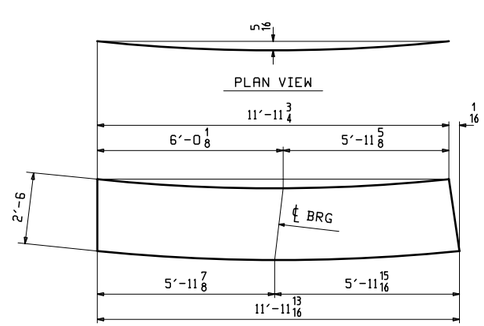

DEV. ORIENTATION DIAGRAM

ABM INFO PAGE	ABM INFO LINE	SHIP MARK	QTY	MARK	MATERIAL	LENGTH FT	LENGTH INCHES	REMARKS	WT	PROCUREMENT NOTES
		5G1B	1		GIRDER			METALIZED	3324	
2	E		1	wa	PL 5/8x30	11	11 13/16	M270-50T2	765	
1	U		1	ta	PL 1 3/4x16	11	11 3/4	M270-50T2	1141	
1	J		1	ba	PL 2x16	11	11 13/16	M270-50T2	1305	
5	C		66		STUD 7/8 ø	0	6	STUDS A108	1	
5	D		28		STUD 7/8 ø	0	7	STUDS A108	1	
		5G2B	1		GIRDER			METALIZED	3324	
2	E		1	wa	PL 5/8x30	11	11 13/16	M270-50T2	765	
1	U		1	ta	PL 1 3/4x16	11	11 3/4	M270-50T2	1141	
1	J		1	ba	PL 2x16	11	11 13/16	M270-50T2	1305	
5	C		66		STUD 7/8 ø	0	6	STUDS A108	1	
5	D		28		STUD 7/8 ø	0	7	STUDS A108	1	
		5G3B	1		GIRDER			METALIZED	3324	
2	E		1	wa	PL 5/8x30	11	11 13/16	M270-50T2	765	
1	U		1	ta	PL 1 3/4x16	11	11 3/4	M270-50T2	1141	
1	J		1	ba	PL 2x16	11	11 13/16	M270-50T2	1305	
5	C		66		STUD 7/8 ø	0	6	STUDS A108	1	
5	D		28		STUD 7/8 ø	0	7	STUDS A108	1	
		5G4B	1		GIRDER			METALIZED	3324	
2	E		1	wa	PL 5/8x30	11	11 13/16	M270-50T2	765	
1	U		1	ta	PL 1 3/4x16	11	11 3/4	M270-50T2	1141	
1	J		1	ba	PL 2x16	11	11 13/16	M270-50T2	1305	
5	C		66		STUD 7/8 ø	0	6	STUDS A108	1	
5	D		28		STUD 7/8 ø	0	7	STUDS A108	1	

BILL OF MATERIAL — JOB NO. 645 — DRAWING NO. 5 — REV. 2

Vermont Agency of Transportation
RECEIVED
ON: December 18, 2015
and Checked for
CONFORMANCE
BY: Todd Sumner DATE: 01/15/2016

SUBMITTAL REVIEW
Review is only for general conformity to the contract drawings and specifications and shall not relieve the contractor of his entire responsibility under the contract, including among other things, dimensions to be confirmed and correlated at the job site, and information that pertains to the fabrication processes or to techniques of construction.
- [ ] NO EXCEPTIONS TAKEN
- [ ] MAKE CORRECTIONS NOTED RESUBMITTAL NOT REQUIRED
- [x] AMEND AND RESUBMIT
- [ ] REJECTED - SEE REMARKS

PB AMERICAS, INC.
BY: Rebecca Bahn
DATE: 1/11/16

REV.	DATE	REMARKS	DWN	CHK	APVL	SHOP
2	12/9	APPROVAL COMMENTS	LWD	WJL		
1	11/16 2015	RELOCATE REBAR HOLES IN WEB PER RFI-002 DATED 10-26/15 / FIX MAT'L GRADE IN BILL	LWD	WJL		
0						

MATERIAL:	SURFACE PREP. & PAINT:	HOLES:	SHOP BOLTS:
M270-50T2 UN.	SEE GN1	AS NOTED	NONE

DESCRIPTION: GIRDER - 5G1B

CASCO BAY STEEL STRUCTURES
CASCO BAY STEEL STRUCTURES, INC.
1 WALLACE AVE. SOUTH PORTLAND, ME 04106
PHONE (207) 780-6722 FAX. (207) 780-6726
TENSOR 3354

STRUCTURE: TH-2 (RIVER ROAD) BRIDGE #10 COUNTY OF ADDISON
DRAWN: LWD DATE: 10/21
CHKD: WJL DATE: 10/27
LOCATION: TOWN OF NEW HAVEN, VT
JOB NO. 645
DWG NO. 5
PROJ NO. BRF 0183 (1)
CUSTOMER: CCS CONSTRUCTORS, INC.
REV. 2

LWD Tue, Dec 15, 2015 09:07:12 AM c:\users\jobs\23545-5 - Rev2

ABM INFO PAGE	ABM INFO LINE	SHIP MARK	QTY	MARK	MATERIAL	LENGTH FT	LENGTH INCHES	REMARKS	WT	PROCUREMENT NOTES
		6G1C	1		GIRDER			METALIZED	20624	
2	C		1	wa	PL $\frac{5}{8}$x30	74	$10\frac{11}{16}$	M270-50T2	4778	
1	S		1	ta	PL $1\frac{3}{4}$x16	74	$10\frac{11}{16}$	M270-50T2	7135	
1	G		1	ba	PL 2x16	74	$10\frac{1}{4}$	M270-50T2	8151	
4	C		2	x2a	PL $\frac{3}{4}$x$7\frac{1}{2}$	2	6	MIE M270-50T2	48	
4	D		4	x2b	PL $\frac{1}{2}$x$7\frac{1}{2}$	2	6	M270-50T2	32	
4	M		1	x2c	PL $\frac{1}{4}$x4	0	11	DRIP BAR	3	
4	M		1	x2d	PL $\frac{1}{4}$x4	0	11	DRIP BAR	3	
5	D		250		STUD $\frac{7}{8}$ ø	0	7	STUDS A108	1	

BILL OF MATERIAL — JOB NO. 645 — DRAWING NO. 6 — REV.

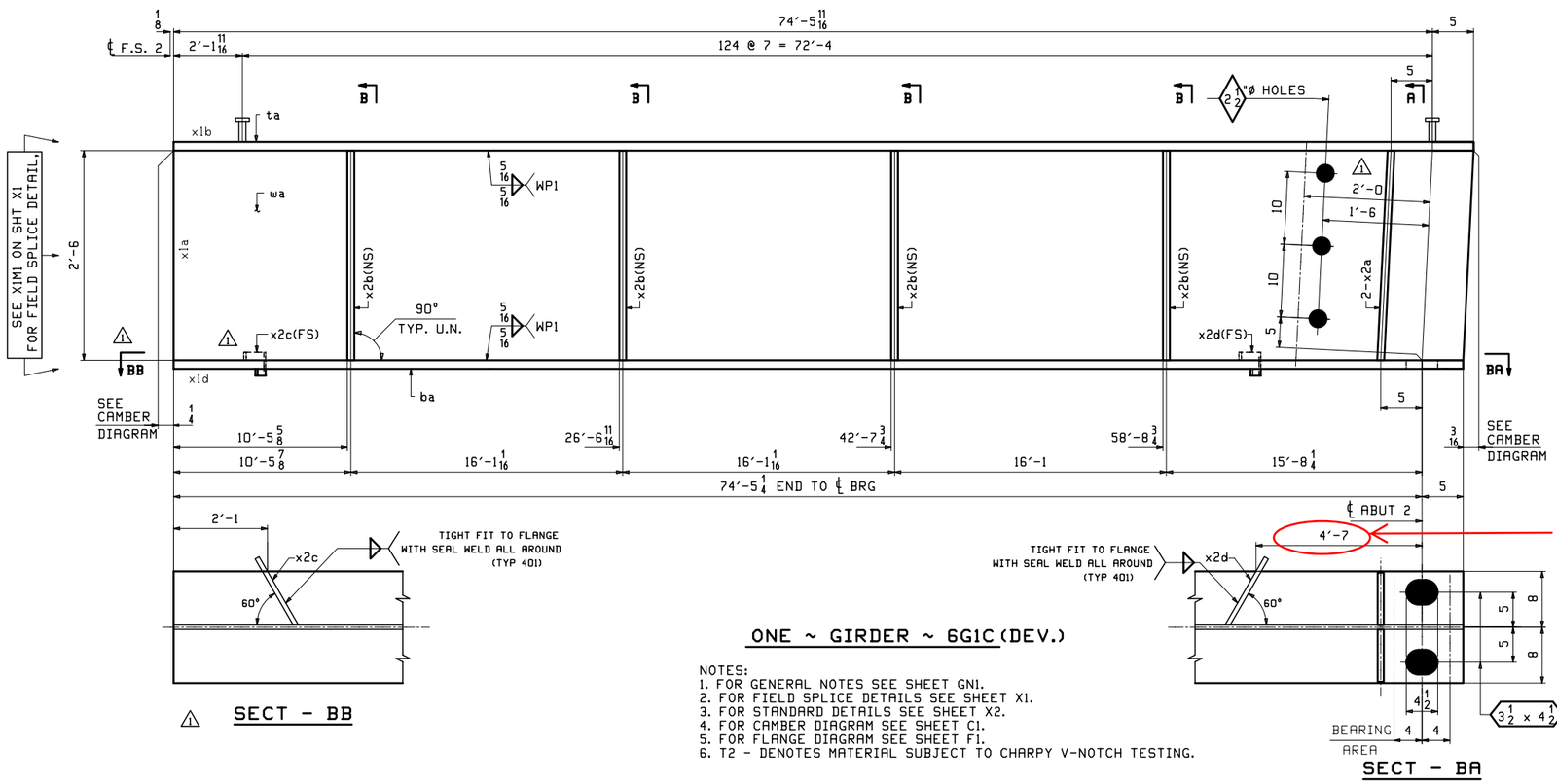

Leaves 2'-7" from face of abutment. VTrans standard is 3' from face.

SECT - BB

SECT - BA

ONE ~ GIRDER ~ 6G1C (DEV.)

NOTES:
1. FOR GENERAL NOTES SEE SHEET GN1.
2. FOR FIELD SPLICE DETAILS SEE SHEET X1.
3. FOR STANDARD DETAILS SEE SHEET X2.
4. FOR CAMBER DIAGRAM SEE SHEET C1.
5. FOR FLANGE DIAGRAM SEE SHEET F1.
6. T2 - DENOTES MATERIAL SUBJECT TO CHARPY V-NOTCH TESTING.

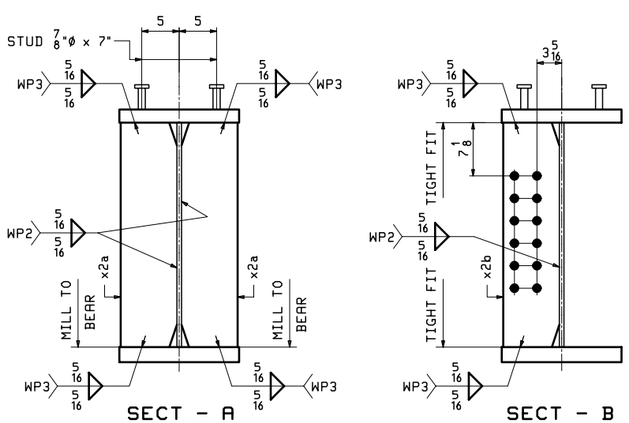

SECT - A (DEV)

SECT - B

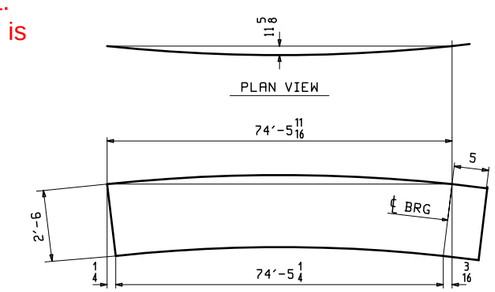

DEV. ORIENTATION DIAGRAM

SUBMITTAL REVIEW

Review is only for general conformity to the contract drawings and specifications and shall not relieve the contractor of his entire responsibility under the contract, including among other things, dimensions to be confirmed and correlated at the job site, and information that pertains to the fabrication processes or to techniques of construction.

- ☐ NO EXCEPTIONS TAKEN
- ☐ MAKE CORRECTIONS NOTED
- RESUBMITTAL NOT REQUIRED
- ☑ AMEND AND RESUBMIT
- ☐ REJECTED - SEE REMARKS

PB AMERICAS, INC.
BY: Robert Baker
DATE: 1/11/16

Vermont Agency of Transportation
RECEIVED
ON: December 18, 2015
and Checked for
CONFORMANCE
BY: Todd Sumner DATE: 01/15/2016

REV.	DATE	REMARKS	DWN	CHK	APVL	SHOP
1	12/9	APPROVAL COMMENTS	LWD	WJL		
0						

MATERIAL: M270-50T2 UN. | SURFACE PREP. & PAINT: SEE GN1 | HOLES: 15/16"ø UN. | SHOP BOLTS: NONE

DESCRIPTION: GIRDER - 6G1C

CASCO BAY STEEL STRUCTURES — CASCO BAY STEEL STRUCTURES, INC. 1 WALLACE AVE. SOUTH PORTLAND, ME 04106 PHONE (207) 780-6722 FAX. (207) 780-6726 TENSOR 3354

STRUCTURE: TH-2 (RIVER ROAD) BRIDGE #10 COUNTY OF ADDISON

DRAWN: LWD DATE: 10/23
CHKD: WJL DATE: 10/27

LOCATION: TOWN OF NEW HAVEN, VT
PROJ NO. BRF 0183 (1)
CUSTOMER: CCS CONSTRUCTORS, INC.

JOB NO. 645 | DWG NO. 6 | REV. 1

Mon, Dec 14, 2015 11:02:26 AM /users/jobs/3354/6.dwg

ABM INFO		SHIP	BILL OF MATERIAL					JOB NO.	DRAWING NO.	REV.
								645	7	1
PAGE	LINE	MARK	QTY	MARK	MATERIAL	LENGTH FT	LENGTH INCHES	REMARKS	WT	PROCUREMENT NOTES
		7G2C	1		GIRDER			METALIZED	21022	
2	A		1	wa	PL $\frac{5}{8}$x30	75	$10\frac{13}{16}$	M270-50T2	4843	
1	Q		1	ta	PL $1\frac{1}{2}$x16	75	$10\frac{13}{16}$	M270-50T2	7232	
1	E		1	ba	PL 2x16	75	$10\frac{3}{8}$	M270-50T2	8261	
4	C		2	x2a	PL $\frac{3}{4}$x$7\frac{1}{2}$	2	6	MIE M270-50T2	48	
4	D		8	x2b	PL $\frac{1}{2}$x$7\frac{1}{2}$	2	6	M270-50T2	32	
5	D		254		STUD $\frac{7}{8}$ø	0	7	STUDS A108	1	

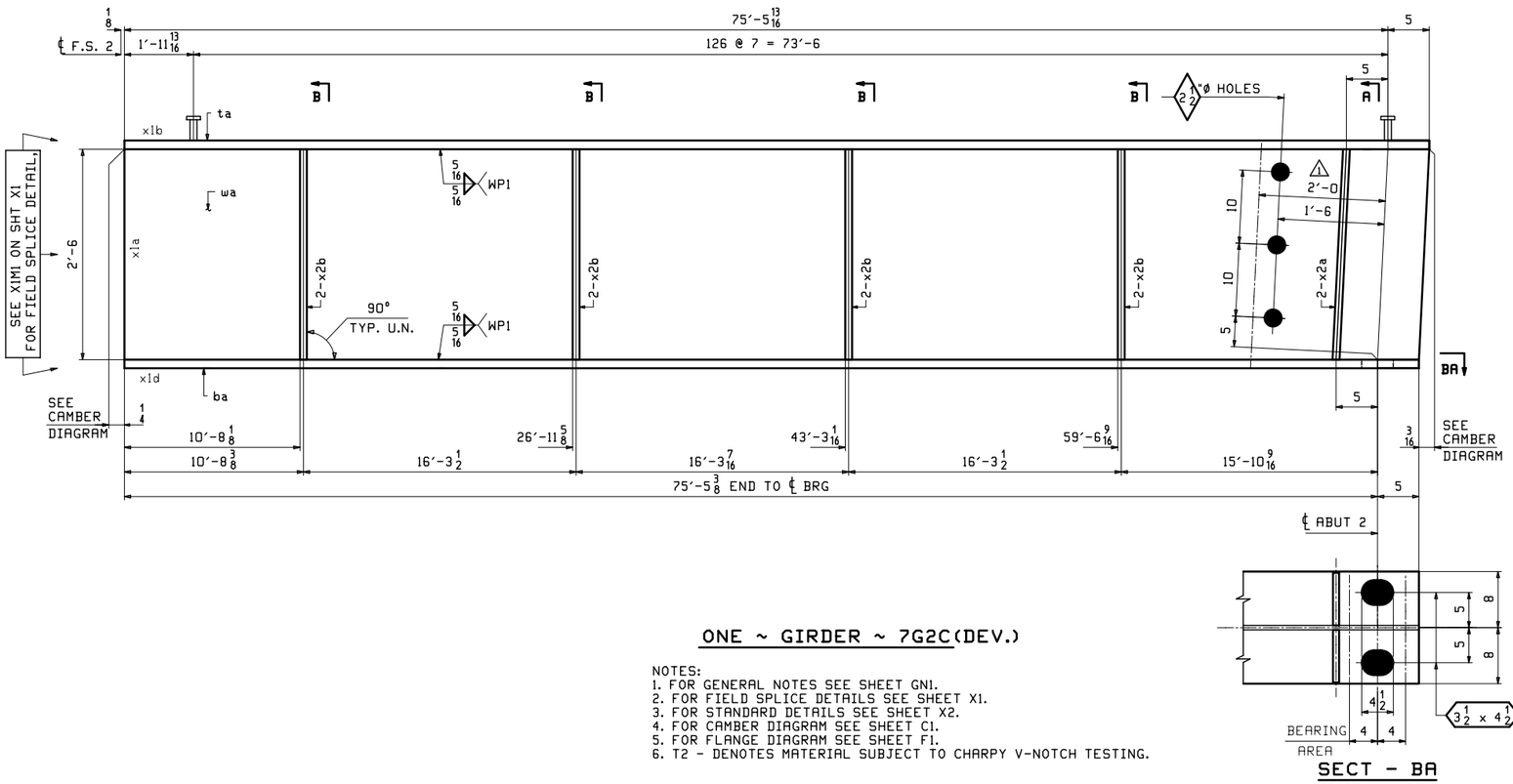

ONE ~ GIRDER ~ 7G2C(DEV.)

NOTES:
1. FOR GENERAL NOTES SEE SHEET GN1.
2. FOR FIELD SPLICE DETAILS SEE SHEET X1.
3. FOR STANDARD DETAILS SEE SHEET X2.
4. FOR CAMBER DIAGRAM SEE SHEET C1.
5. FOR FLANGE DIAGRAM SEE SHEET F1.
6. T2 - DENOTES MATERIAL SUBJECT TO CHARPY V-NOTCH TESTING.

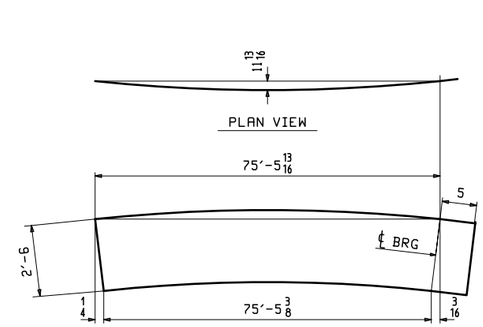

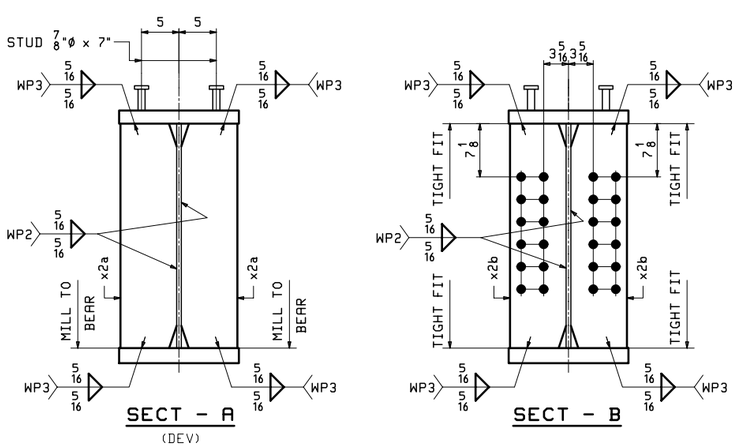

Vermont Agency of Transportation
RECEIVED
ON: December 18, 2015
and Checked for
CONFORMANCE
BY: Todd Sumner DATE: 01/15/2016

SUBMITTAL REVIEW

Review is only for general conformity to the contract drawings and specifications and shall not relieve the contractor of his entire responsibility under the contract, including among other things, dimensions to be confirmed and correlated at the job site, and information that pertains to the fabrication processes or to techniques of construction.

- ☐ NO EXCEPTIONS TAKEN
- ☐ MAKE CORRECTIONS NOTED
- RESUBMITTAL NOT REQUIRED
- ☑ AMEND AND RESUBMIT
- ☐ REJECTED - SEE REMARKS

PB AMERICAS, INC.
BY: Rich Bah
DATE: 1/11/16

REV.	DATE	REMARKS	DWN	CHK	APVL	SHOP
1	12/9	APPROVAL COMMENTS	LWD	WJL		
0						

MATERIAL:	SURFACE PREP. & PAINT:	HOLES:	SHOP BOLTS:
M270-50T2 UN.	SEE GN1	$\frac{15}{16}$"ø UN.	NONE

DESCRIPTION: GIRDER - 7G2C

CASCO BAY STEEL STRUCTURES, INC.
1 WALLACE AVE. SOUTH PORTLAND, ME 04106
PHONE (207) 780-6722 FAX. (207) 780-6726
TENSOR 3354

STRUCTURE:	DRAWN:	DATE:
TH-2 (RIVER ROAD) BRIDGE #10 COUNTY OF ADDISON	LWD	10/23
	CHKD: WJL	DATE: 10/27
LOCATION: TOWN OF NEW HAVEN, VT	JOB NO.	DWG NO.
PROJ NO. BRF 0183 (1)	645	7
CUSTOMER: CCS CONSTRUCTORS, INC.		REV. 1

ABM INFO		SHIP	BILL OF MATERIAL					JOB NO.	DRAWING NO.	REV.
								645	8	1
PAGE	LINE	MARK	QTY	MARK	MATERIAL	LENGTH FT	LENGTH INCHES	REMARKS	WT	PROCUREMENT NOTES
		8G3C	1		GIRDER			METALIZED	21299	
1	Y		1	wa	PL $\frac{5}{8}$x30	76	11	M270-50T2	4907	
1	N		1	ta	PL $1\frac{1}{2}$x16	76	11	M270-50T2	7328	
1	C		1	ba	PL 2x16	76	$10\frac{9}{16}$	M270-50T2	8371	
4	C		2	x2a	PL $\frac{3}{4}$x$7\frac{1}{2}$	2	6	MIE M270-50T2	48	
4	D		8	x2b	PL $\frac{1}{2}$x$7\frac{1}{2}$	2	6	M270-50T2	32	
5	D		258		STUD $\frac{7}{8}$ø	0	7	STUDS A108	1	

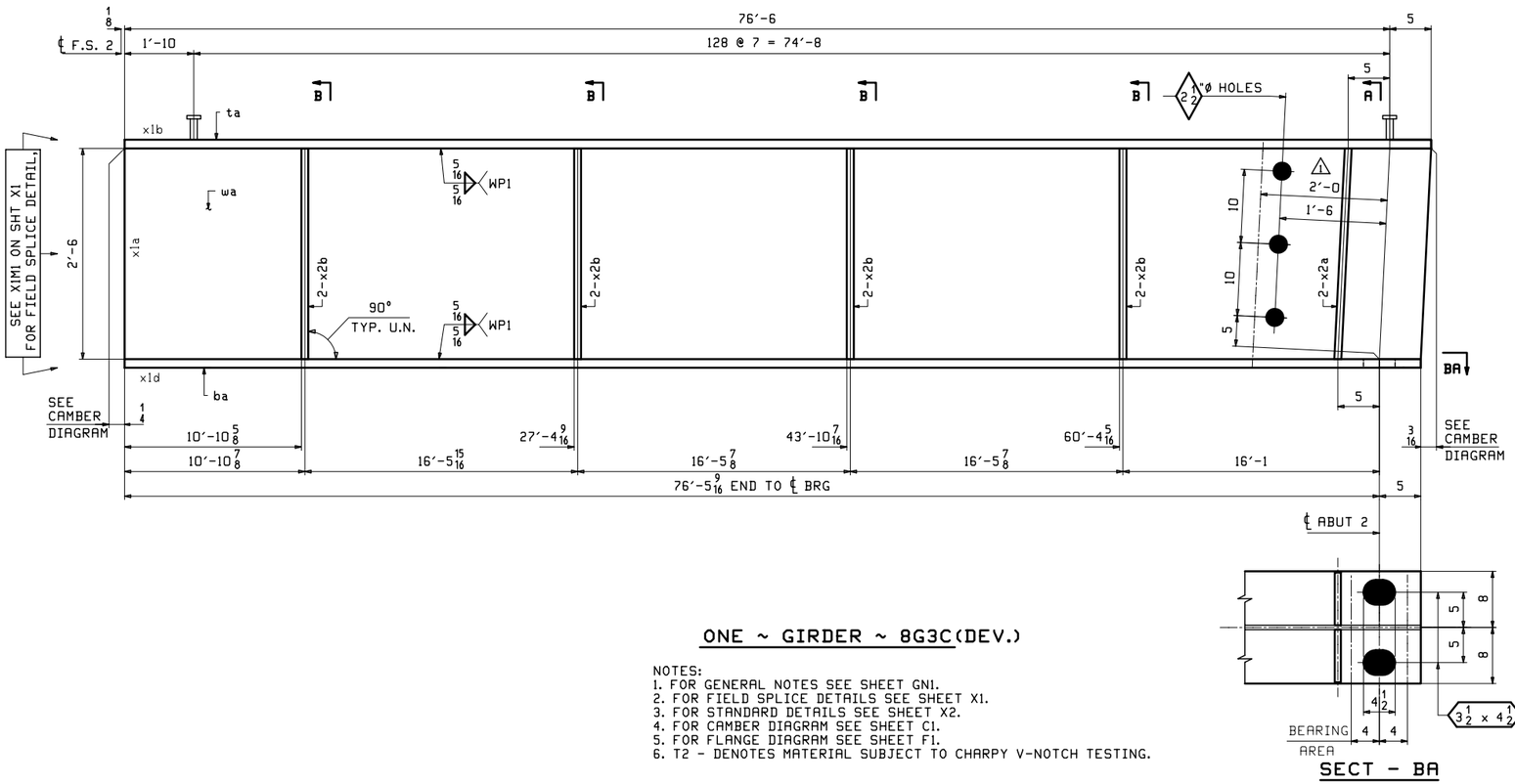

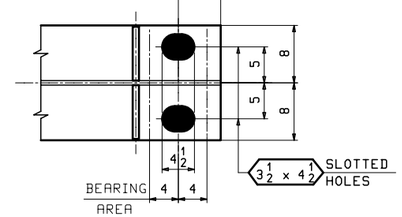

SECT - BA

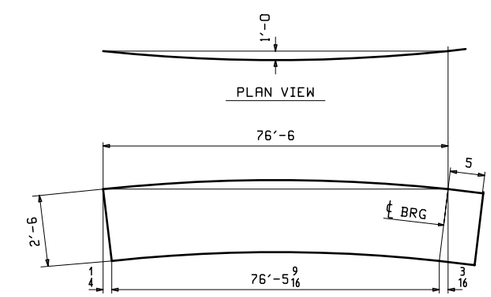

DEV. ORIENTATION DIAGRAM

ONE ~ GIRDER ~ 8G3C(DEV.)

NOTES:
1. FOR GENERAL NOTES SEE SHEET GN1.
2. FOR FIELD SPLICE DETAILS SEE SHEET X1.
3. FOR STANDARD DETAILS SEE SHEET X2.
4. FOR CAMBER DIAGRAM SEE SHEET C1.
5. FOR FLANGE DIAGRAM SEE SHEET F1.
6. T2 - DENOTES MATERIAL SUBJECT TO CHARPY V-NOTCH TESTING.

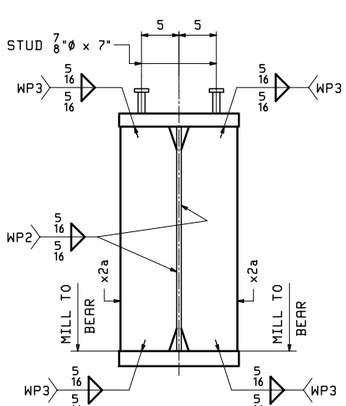

SECT - A
(DEV)

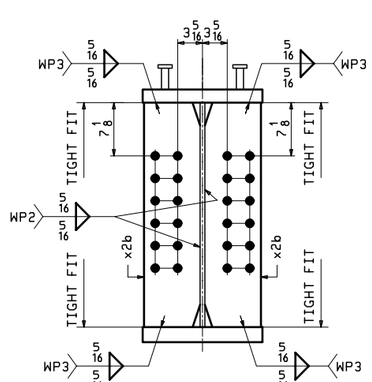

SECT - B

REV.	DATE	REMARKS	DWN	CHK	APVL	SHOP
1	12/9	APPROVAL COMMENTS	LWD	WJL		
0						

MATERIAL:	SURFACE PREP. & PAINT:	HOLES:	SHOP BOLTS:
M270-50T2 UN.	SEE GN1	$\frac{15}{16}$"ø UN.	NONE

DESCRIPTION: GIRDER - 8G3C

CASCO BAY STEEL STRUCTURES
CASCO BAY STEEL STRUCTURES, INC.
1 WALLACE AVE. SOUTH PORTLAND, ME 04106
PHONE (207) 780-6722 FAX. (207) 780-6726
TENSOR 3354

STRUCTURE:	DRAWN:	DATE:
TH-2 (RIVER ROAD) BRIDGE #10 COUNTY OF ADDISON	LWD	10/23
	CHKD: WJL	DATE: 10/27
LOCATION: TOWN OF NEW HAVEN, VT	JOB NO.	DWG NO.
PROJ NO. BRF 0183 (1)	645	8
CUSTOMER: CCS CONSTRUCTORS, INC.		REV. 1

SUBMITTAL REVIEW

Review is only for general conformity to the contract drawings and specifications and shall not relieve the contractor of his entire responsibility under the contract, including among other things, dimensions to be confirmed and correlated at the job site, and information that pertains to the fabrication processes or to techniques of construction.

- ☐ NO EXCEPTIONS TAKEN
- ☐ MAKE CORRECTIONS NOTED RESUBMITTAL NOT REQUIRED
- ☑ AMEND AND RESUBMIT
- ☐ REJECTED - SEE REMARKS

PB AMERICAS, INC.
BY: Robert Bach
DATE: 1/11/16

Vermont Agency of Transportation
RECEIVED
ON: December 18, 2015
and Checked for
CONFORMANCE
BY: Todd Sumner DATE: 01/15/2016

ABM INFO PAGE	LINE	SHIP MARK	QTY	MARK	MATERIAL	LENGTH FT	LENGTH INCHES	REMARKS	WT	PROCUREMENT NOTES
		9G4C	1		GIRDER			METALIZED	21454	
1	W		1	wa	PL $\frac{5}{8}$x30	77	$11\frac{1}{8}$	M270-50T2	4972	
1	L		1	ta	PL $1\frac{1}{2}$x16	77	$11\frac{1}{8}$	M270-50T2	7425	
1	A		1	ba	PL 2x16	77	$10\frac{11}{16}$	M270-50T2	8481	
4	C		2	x2a	PL $\frac{3}{4}$x$7\frac{1}{2}$	2	6	MIE M270-50T2	48	
4	D		4	x2b	PL $\frac{1}{2}$x$7\frac{1}{2}$	2	6	M270-50T2	32	
4	M		1	x2c	PL $\frac{1}{4}$x4	0	11	DRIP BAR	3	
4	M		1	x2d	PL $\frac{1}{4}$x4	0	11	DRIP BAR	3	
5	D		262		STUD $\frac{7}{8}$ø	0	7	STUDS A108	1	

JOB NO. 645 | DRAWING NO. 9 | REV. 1

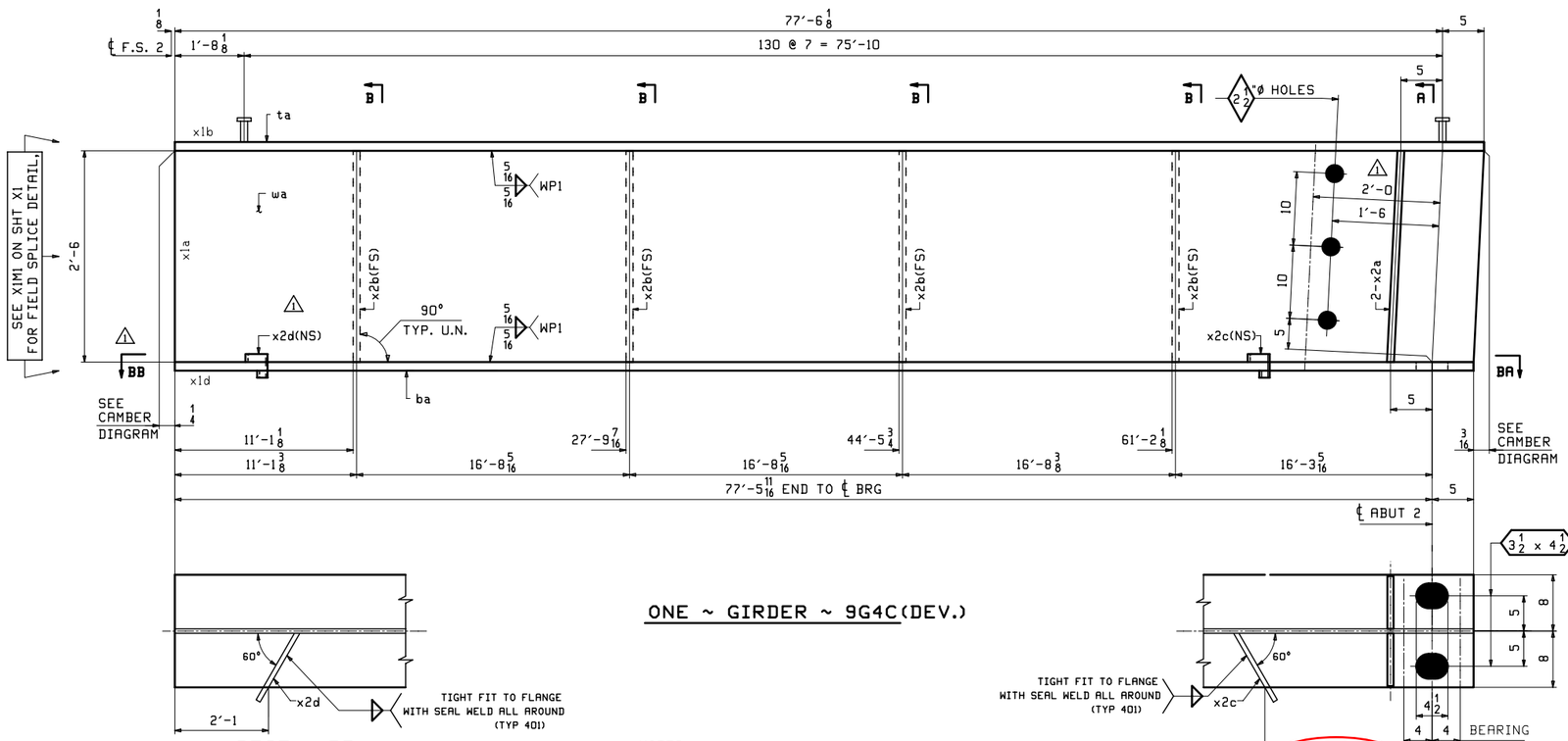

ONE ~ GIRDER ~ 9G4C(DEV.)

SECT - BB

NOTES:
1. FOR GENERAL NOTES SEE SHEET GN1.
2. FOR FIELD SPLICE DETAILS SEE SHEET X1.
3. FOR STANDARD DETAILS SEE SHEET X2.
4. FOR CAMBER DIAGRAM SEE SHEET C1.
5. FOR FLANGE DIAGRAM SEE SHEET F1.
6. T2 - DENOTES MATERIAL SUBJECT TO CHARPY V-NOTCH TESTING.

Leaves 2'-7" from face of abutment. VTrans standard is 3' from face.

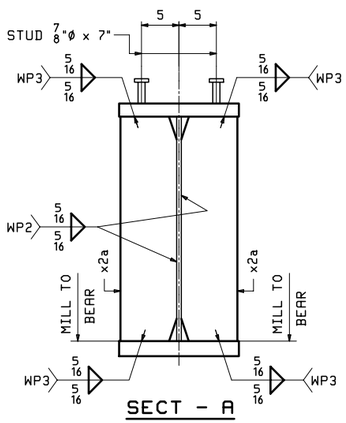

SECT - A
(DEV)

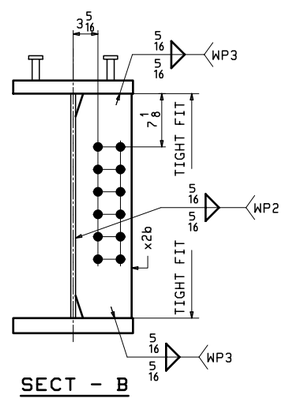

SECT - B

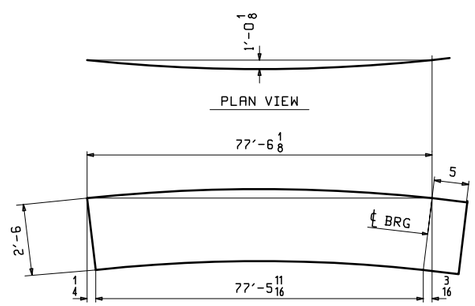

DEV. ORIENTATION DIAGRAM

SUBMITTAL REVIEW

Review is only for general conformity to the contract drawings and specifications and shall not relieve the contractor of his entire responsibility under the contract, including among other things, dimensions to be confirmed and correlated at the job site, and information that pertains to the fabrication processes or to techniques of construction.

- ☐ NO EXCEPTIONS TAKEN
- ☐ MAKE CORRECTIONS NOTED
- RESUBMITTAL NOT REQUIRED
- ☑ AMEND AND RESUBMIT
- ☐ REJECTED - SEE REMARKS

PB AMERICAS, INC.
BY: Robert Barber
DATE: 1/11/16

Vermont Agency of Transportation
RECEIVED
ON: December 18, 2015
and Checked for
CONFORMANCE
BY: Todd Sumner DATE: 01/15/2016

REV.	DATE	REMARKS	DWN	CHK	APVL	SHOP
1	12/9	APPROVAL COMMENTS	LWD	WJL		
0						

MATERIAL: M270-50T2 UN. | SURFACE PREP. & PAINT: SEE GN1 | HOLES: 15/16"ø UN. | SHOP BOLTS: NONE

DESCRIPTION: GIRDER - 9G4C

CASCO BAY STEEL STRUCTURES, INC.
1 WALLACE AVE. SOUTH PORTLAND, ME 04106
PHONE (207) 780-6722 FAX. (207) 780-6726
TENSOR 3354

STRUCTURE: TH-2 (RIVER ROAD) BRIDGE #10 COUNTY OF ADDISON

DRAWN: LWD DATE: 10/23
CHKD: WJL DATE: 10/27

LOCATION: TOWN OF NEW HAVEN, VT | JOB NO. 645 | DWG NO. 9
PROJ NO. BRF 0183 (1) | REV. 1
CUSTOMER: CCS CONSTRUCTORS, INC.

WJL Mon, Dec 14, 2015 11:05:51 AM /users/jobs/3354/9 - Revi

ABM INFO		SHIP	BILL OF MATERIAL					JOB NO. 645	DRAWING NO. 10	REV.
PAGE	LINE	MARK	QTY	MARK	MATERIAL	LENGTH FT	LENGTH INCHES	REMARKS	WT	PROCUREMENT NOTES
		10AB1	17		SWEDGE ANCHOR ROD				42	
5	J		17	a10	$1\frac{1}{2}$ ϕ ROD	3	0	TYPE-1 (SWEDGED - 20" THRD) A449	18	
5	H		34	b10	PL $\frac{1}{2}$×5	0	5	PLATE WASHER M270-36	4	
5	K		51		$2\frac{1}{2}$ ϕ HHN			M291 (DH)	6	
		10SP1	8		SOLE PLATES				51	
5	G		8		PL $1\frac{1}{2}$×8	1	3	SOLE PLATE M270-36	51	

1 2 1/2"

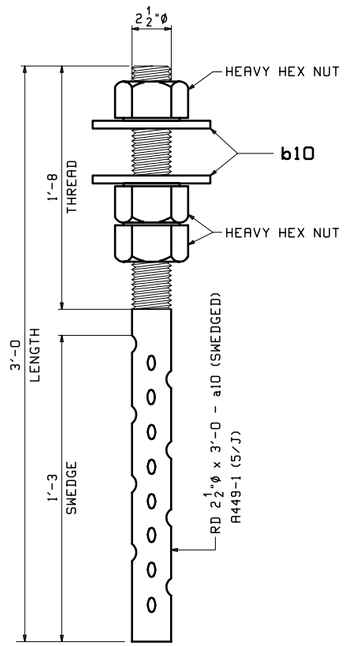

17 ~ SWEDGE ANCHOR ROD ~ 10AB1

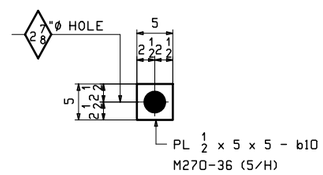

34 - PLATE WASHERS ~ b10

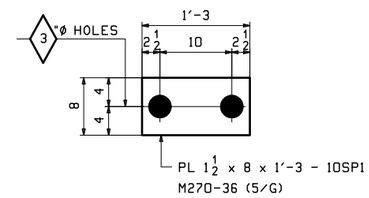

8 - SOLE PLATES ~ 10SP1

Vermont Agency of Transportation
RECEIVED
ON: December 18, 2015
and Checked for
CONFORMANCE
BY: Todd Sumner DATE: 01/15/2016

SUBMITTAL REVIEW

Review is only for general conformity to the contract drawings and specifications and shall not relieve the contractor of his entire responsibility under the contract, including among other things, dimensions to be confirmed and correlated at the job site, and information that pertains to the fabrication processes or to techniques of construction.

- ☐ NO EXCEPTIONS TAKEN
- ☐ MAKE CORRECTIONS NOTED
- RESUBMITTAL NOT REQUIRED
- ☑ AMEND AND RESUBMIT
- ☐ REJECTED - SEE REMARKS

PB AMERICAS, INC.
BY: Robert Gahn
DATE: 1/11/16

NOTES:
1. FOR GENERAL NOTES SEE DRAWING GN1.
2. "T2" DENOTES MATERIAL SUBJECT TO CHARPY V-NOTCH TESTING.

1 1/11 Engineers Review RJG

REV.	DATE	REMARKS	DWN	CHK	APVL	SHOP
0						

MATERIAL:	SURFACE PREP. & PAINT:	HOLES:	SHOP BOLTS:
AS NOTED	SEE GN1	AS NOTED	NONE

DESCRIPTION: ANCHOR BOLTS & SOLE PLATES

CASCO BAY STEEL STRUCTURES, INC.
1 WALLACE AVE.
SOUTH PORTLAND, ME 04106
PHONE (207) 780-6722
FAX. (207) 780-6726
TENSOR 3354

STRUCTURE:
TH-2 (RIVER ROAD)
BRIDGE #10
COUNTY OF ADDISON

DRAWN: LWD	DATE: 10/23		
CHKD: WJL	DATE: 10/27		
LOCATION: TOWN OF NEW HAVEN, VT		JOB NO.	DWG NO.
PROJ NO. BRF 0183 (1)		645	10
CUSTOMER: CCS CONSTRUCTORS, INC.			REV. △

WJL Thu, Oct 29, 2015 02:52:24 PM /users/jobs/3354/10.dwg

ABM INFO		SHIP	BILL OF MATERIAL					JOB NO.	DRAWING NO.	REV.
								645	11	
PAGE	LINE	MARK	QTY	MARK	MATERIAL	LENGTH FT	LENGTH INCHES	REMARKS	WT	PROCUREMENT NOTES
		11D1	24		INT. DIAPHRAGMS			METALIZED	738	
4	G		24	a11	WT 24x84	8	$9\frac{7}{16}$	M270-50T2	738	

1 W24x84

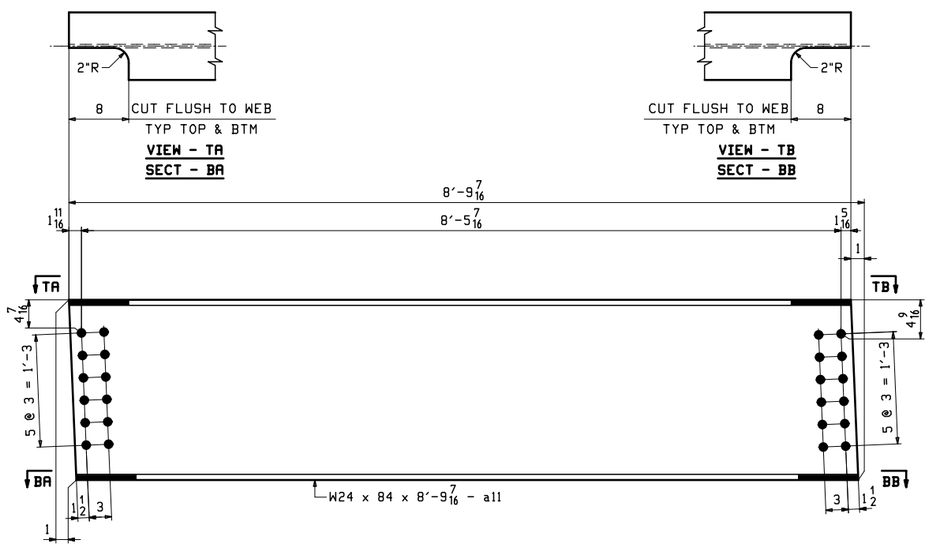

24 ~ INTERMEDIATE DIAPHRAGMS ~ 11D1

Vermont Agency of Transportation
RECEIVED
ON: December 18, 2015
and Checked for
CONFORMANCE
BY: Todd Sumner DATE: 01/15/2016

SUBMITTAL REVIEW

Review is only for general conformity to the contract drawings and specifications and shall not relieve the contractor of his entire responsibility under the contract, including among other things, dimensions to be confirmed and correlated at the job site, and information that pertains to the fabrication processes or to techniques of construction.

- ☐ NO EXCEPTIONS TAKEN
- ☐ MAKE CORRECTIONS NOTED RESUBMITTAL NOT REQUIRED
- ☑ AMEND AND RESUBMIT
- ☐ REJECTED - SEE REMARKS

PB AMERICAS, INC.
BY: [signature]
DATE: 1/11/16

NOTES:
1. FOR GENERAL NOTES SEE DRAWING GN1.
2. "T2" DENOTES MATERIAL SUBJECT TO CHARPY V-NOTCH TESTING.

1 1/11 Engineers Review RJG

REV.	DATE	REMARKS	DWN	CHK	APVL	SHOP
0						

MATERIAL:	SURFACE PREP. & PAINT:	HOLES:	SHOP BOLTS:
M270-50T2 UN.	SEE GN1	$\frac{15}{16}$"Ø UN.	NONE

DESCRIPTION: INT DIAPHRAGMS

CASCO BAY STEEL STRUCTURES, INC.
1 WALLACE AVE. SOUTH PORTLAND, ME 04106
PHONE (207) 780-6722 FAX. (207) 780-6726
TENSOR 3354

STRUCTURE:	DRAWN:	DATE:
TH-2 (RIVER ROAD) BRIDGE #10 COUNTY OF ADDISON	LWD	10/23
	CHKD: WJL	DATE: 10/27
LOCATION: TOWN OF NEW HAVEN, VT	JOB NO.	DWG NO.
PROJ NO. BRF 0183 (1)	645	11
CUSTOMER: CCS CONSTRUCTORS, INC.		REV. △