RIVER ROAD BRIDGE No. 10
NEW HAVEN, VT

STATE OF VERMONT
ERNEST J. BROD
No. 7814
PROFESSIONAL ENGINEER

LIFT DESIGN CALCULATIONS

(SUPPLEMENT # 1)

ISSUE:

APPROACH SLAB: THIS SUPPLEMENT IS ISSUED IN RESPONSE TO MARKUP ON JPC DRAWINGS 'AS1' & 'AS2' REGARDING MINIMUM. EDGE DISTANCE.

JPC RESPONSE:

THE MINIMUM EDGE DISTANCE OF 21" IS APPLICABLE WHEN 8 TON x 6¾" S.L. ANCHORS ARE USED IN SHEAR. IN THIS APPLICATION THE LIFTERS ARE PRINCIPALLY IN TENSION AND THE MIN. EDGE DISTANCE IS APPROX = $7\frac{5}{16}" + \frac{2\frac{5}{8}"}{2} = 8\frac{5}{8}"$, SAY 10". SEE ATTACHED CALCULATION, PRODUCT LITERATURE, P. 26 FOR LIFT ANCHOR DIM. & INSTALLATION DIM. SHEAR CONE IS SIM. TO HEADED STUD, SEE FIG. 6.5.3 OF PCI DESIGN HANDBOOK ATTACHED.

LIFTING LOOP/LIFTING INSERT DESIGN CALCULATIONS
(SUPPLEMENT #1)

RESPONSE TO EDGE DISTANCE QUESTION:

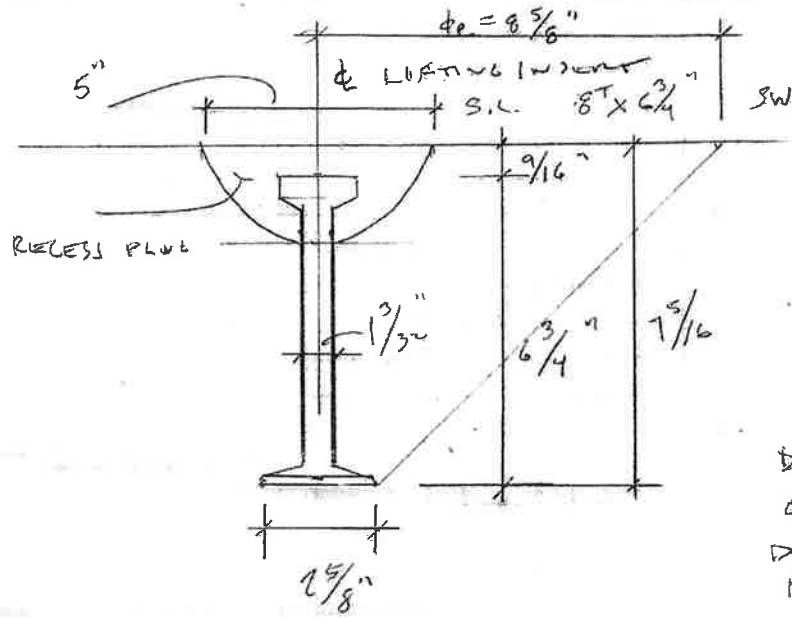

SWL (4:1 S.F.) 11200 LB IN 3500 PSI CONCRETE

DIM. VALUES OBTAINED FOR DAYTON SUPERIOR PRODUCT LITERATURE

CHECK APPROX MIN EDGE DISTANCE OF ~10" FOR TENSION LOAD APPLICATION

$d_e = 7\frac{5}{16}'' + \frac{1}{2} \times 2\frac{5}{8}'' = 8\frac{5}{8}''$, ROUNDED UP TO 10".

TO ACCOUNT FOR EFFECT OF RECESS PLUG (BY ENGINEERING JUDGEMENT)

ALSO CHECK SWL (CONCRETE) OF INSERT

$$\phi P_{c1} = 10.7\, l_e\,(l_e + d_h)\sqrt{f'_c}$$

EQ 6.5.3 OF 5TH EDITION PCI DESIGN HANDBOOK

$$= 10.7 \times 7\tfrac{5}{16}\left(7\tfrac{5}{16} + 2\tfrac{5}{8}\right)\sqrt{3500}$$

$$= 46000 \text{ LB}$$

FOR S.F = 4:1

$$SWL = 46000/4 = 11500 \text{ LB} \sim 11200 \text{ LB PUBLISHED VALUE, O.K.}$$

TOPS

ability of headed stud design. The design methods used here should be considered an interim step toward a final headed stud design procedure. It is recommended that this procedure be limited to headed studs with an embedment not greater than 8 in.

An important factor in the performance of headed studs when controlled by concrete capacity is the confinement of the failure area with reinforcement. In shear, design capacity is increased with such reinforcement. In tension, ductility can be provided. It is recommended that reinforcement be placed to cross failure planes around headed stud anchorages.

Welded headed studs are designed to resist direct tension, shear or a combination of the two. The design equations given below are applicable to studs which are welded to steel plates or other structural members, and embedded in unconfined concrete.

Where feasible, headed stud connections should be designed and detailed such that the connection failure is precipitated by failure (typically defined as yielding) of the stud material rather than failure of the surrounding concrete. The in-place strength should be taken as the smaller of the values based on concrete and steel.

6.5.2.1 Tension

The design tensile strength governed by concrete failure is [9]:

$$\phi P_c = \phi A_o(2.8\lambda\sqrt{f'_c}) \qquad \text{(Eq. 6.5.2)}$$

where:

ϕ = 0.85

A_o = area of the assumed failure surface which, for a single stud not located near a free edge, is taken to be that of a 45° truncated cone as shown in Figure 6.5.3.

Figure 6.5.3 Shear cone development for welded headed studs

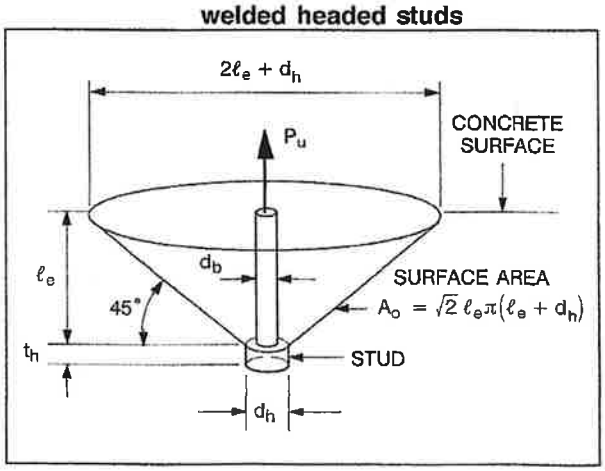

Using the 45° cone area and ϕ = 0.85, Eq. 6.5.2 may be written as:

$$\phi P_c = 10.7\ell_e(\ell_e + d_h)\lambda\sqrt{f'_c} \qquad \text{(Eq. 6.5.3)}$$

Note: The stud length is often used in place of the actual embedment length, ℓ_e, which is equal to the stud length minus the thickness of the head. This simplification is generally acceptable except in short studs. In short studs (length ≤ 4 in.), the use of actual embedment length is recommended. It should also be noted that short stud capacities are also sensitive to fabrication tolerances. Thus, use of a larger overall factor of safety may be appropriate for short studs. See Sect. 6.3.

For a stud located closer to a free edge than the embedment length, ℓ_e, the design tensile strength given by Eq. 6.5.3, should be reduced by multiplying it by C_{es}:

$$C_{es} = \frac{d_e}{\ell_e} \leq 1.0 \qquad \text{(Eq. 6.5.4)}$$

where d_e is the distance measured from the stud axis to the free edge. If a stud is located in the corner of a concrete member, Eq. 6.5.4 should be applied twice, once for each edge distance. Figure 6.15.6 lists values based on Eqs. 6.5.3 and 6.5.4.

For a group of studs, the concrete failure surface may be along a truncated pyramid rather than separate shear cones, as shown in Figure 6.5.4.

For this case, the design tensile strength is:

$$\phi P_c = \phi\lambda\left(\frac{2}{3}\right)\sqrt{f'_c}\,(2.8A_{slope} + 4A_{flat}) \qquad \text{(Eq. 6.5.5)}$$

where:

A_{slope} = sum of the areas of the sloping sides

A_{flat} = area of the flat bottom of the truncated pyramid

Figure 6.5.4 Truncated pyramid failure

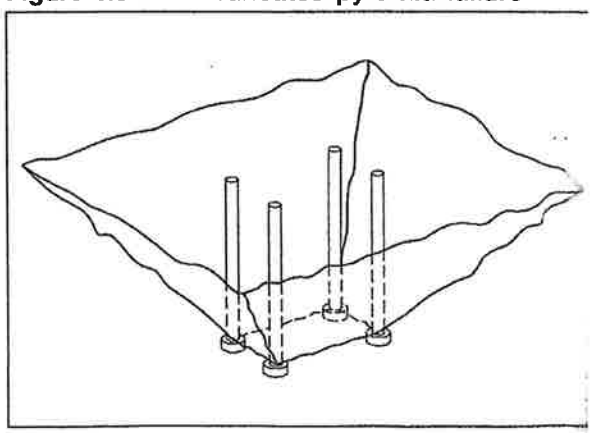

P52 Swift Lift® Anchor

The P52 Swift Lift Anchor is hot forged from carbon steel. The formed head provides spherical seating that the Lifting Eye engages, while a disc-shaped foot is embedded in the concrete.

Due to its being a forged part, the Swift Lift Anchor does not depend on welds or thread engagement to develop its safe working load. Forging provides maximum safety with its advantageous material structure. This allows the anchor to easily meet the OSHA requirement of a 4 to 1 factor of safety.

In addition to the carbon steel anchors, Type 304 or 316 Stainless Steel Swift Lift Anchors are available on special order. Use stainless steel anchors when maximum protection against corrosion is required.

For safety, refer to the P52 Swift Lift Anchor Selection Chart to determine the actual safe working load of an individual anchor. The MAXIMUM safe working load is clearly visible on the head of the anchor for easy recognition of the appropriate hardware and accessories for-use with each Swift Lift Anchor.

Caution: The Swift Lift Anchor is designed to be used with Dayton Superior components. Failure to use this combination may result in concrete spalling or premature failure.

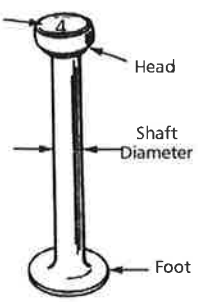

To Order:

Specify: (1) quantity, (2) name, (3) system size, (4) length

Example:

200, P52 Swift Lift Anchors, 4 ton, 9-1/2" long

P52 Swift Lift Anchor and Recess Plug Dimensions

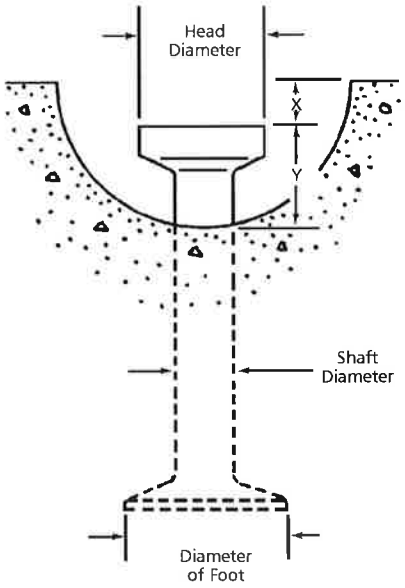

P52 Swift Lift Anchor

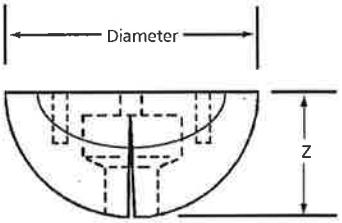

Swift Lift Round Recess Plug

Swift Lift Round Recess Plug Dimensions		
Swift Lift Anchor	Diameter of Recess Plug	Dimension Z
1	2-7/16"	1-3/16"
2	3-5/16"	1-7/16"
4	4"	1-13/16"
8	5"	2-5/16"
20 Tons	6-3/8"	3-1/8"

Note: The diameter of the narrow recess plug is the same as the diameter of the round recess plug.

P52 Swift Lift Anchor Dimensions					
Swift Lift Anchor	Dimension X	Dimension Y	Shaft Diameter	Foot Diameter	Head Diameter
1	5/16"	7/8"	3/8"	1"	11/16"
2	7/16"	1-1/16"	9/16"	1-3/8"	1-1/32"
4	9/16"	1-5/16"	3/4"	1-7/8"	1-11/32"
8	9/16"	1-5/8"	1-3/32"	2-5/8"	1-7/8"
20 Tons	9/16"	2-5/8"	1-1/2"	3-3/4"	2-3/4"

P52 Swift Lift® Anchor Tensile and Shear Capacity

When anchors are used in the face of thin concrete elements

The following table lists the P52 Swift Lift Anchors that are currently manufactured. Other sizes and lengths are available on special order. However, the sizes and lengths of anchors shown will handle the majority of flat precast concrete elements.

When the P52 Swift Lift Anchor is properly embedded in normal weight concrete, the tabulated working loads are applicable for any direction of load. This applies even if the direction of load is parallel to the axis of the anchor, perpendicular to it or at any other angle.

Minimum distance between anchors is twice the minimum edge distance.

It is critical to remember that in order to obtain the safe working loads listed in the table below, the normal weight concrete must have obtained the minimum concrete strength shown, prior to initial load application.

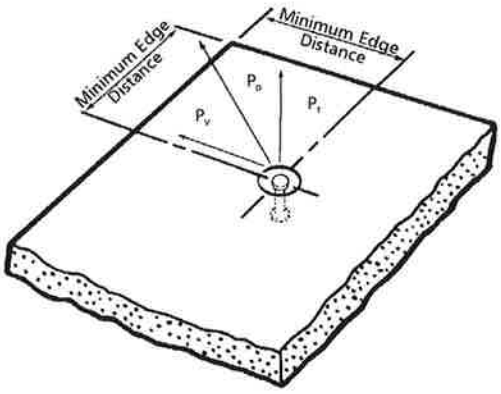

Swift Lift Anchor Ton x Length	Safe Working Load	Minimum Concrete Strength	Minimum Edge Distance
1 ton x 2-5/8"	1,700 lbs.	3,500 psi	8"
1 ton x 3-3/8"	2,000 lbs.	2,200 psi	10"
1 ton x 4-3/4"	2,000 lbs.	1,600 psi	10"
1 ton x 8"	2,000 lbs.	1,600 psi	10"
1 ton x 9-1/2"	2,000 lbs.	1,600 psi	10"
2 ton x 2-3/4"	2,100 lbs.	3,500 psi	8"
2 ton x 3-3/8"	2,900 lbs.	3,500 psi	10"
2 ton x 4-3/4"	4,000 lbs.	3,500 psi	10"
2 ton x 5-1/2"	4,000 lbs.	1,600 psi	13"
2 ton x 6"	4,000 lbs.	1,600 psi	13"
2 ton x 6-3/4"	4,000 lbs.	1,600 psi	13"
2 ton x 11"	4,000 lbs.	1,600 psi	14"
4 ton x 3-3/4"	4,000 lbs.	3,500 psi	12"
4 ton x 4-1/4"	4,900 lbs.	3,500 psi	13"
4 ton x 4-3/4"	5,800 lbs.	3,500 psi	14"
4 ton x 5-1/2"	7,400 lbs.	3,500 psi	17"
4 ton x 5-3/4"	7,900 lbs.	3,500 psi	17"
4 ton x 7-1/8"	8,000 lbs.	1,800 psi	20"
4 ton x 9-1/2"	8,000 lbs.	1,600 psi	17"
4 ton x 14"	8,000 lbs.	1,600 psi	18"
4 ton x 19"	8,000 lbs.	1,600 psi	20"
8 ton x 4-3/4"	6,400 lbs.	3,500 psi	16"
8 ton x 5-1/4"	6,850 lbs.	3,500 psi	16"
8 ton x 6-3/4"	11,200 lbs.	3,500 psi	21"
8 ton x 10"	16,000 lbs.	3,500 psi	19"
8 ton x 13-3/8"	16,000 lbs.	1,600 psi	23"
8 ton x 26-3/4"	16,000 lbs.	1,600 psi	27"
20 ton x 10"	25,000 lbs.	3,500 psi	24"
20 ton x 19-3/4"	40,000 lbs.	3,500 psi	31"

Safe Working Loads provide a factor of safety of approximately 4 to1 in normal weight concrete. Safe Working Load is based on anchor setback from face of concrete "X" dimension, as shown on page 26.