TH4 CREEK RD. BRIDGE 4 over WHITNEY BK.

CRAFTSBURY, VT

LIFT LOOP / LIFT INSERT DESIGN CALCULATIONS

ABUTMENTS

$f'_{ci} = 3500$ PSI $f'_c = 5000$ PSI

PIECE WEIGHTS

CR-AB1 98,100 # CR-AB2 109,000 #

FOR CR-AB1: CALCULATE MAX TENSION LOAD / LIFT POINT:

REFERENCE ATTACHED SKETCH & ABUTMENT CG CALCULATION:

LIFT LOOPS SHALL BE INSTALLED SUCH THAT LIFTING LOAD AT (A) IS EQUAL TO LIFTING LOAD AT (B): LOAD (A) = LOAD (B) = $\frac{98,100}{2} = 49.1$ K

- LOAD (A) SHALL ENGAGE (2) SETS OF LIFT LOOPS AT (1) & (2). LOCATION OF (1) & (2) IS EQUALLY SPACED ABOUT (A), THEREFORE

$R_1 = R_2 = 49.1/2 = 24.5$ K

- LOAD (B) SHALL ENGAGE (2) SETS OF LIFT LOOPS AT (3) & (4)

$R_3 = \frac{5'\text{-}7\,\frac{7}{8}''}{9'\text{-}8\,\frac{3}{4}}(49.1) = 28.5$ K

$R_4 = 49.1 - R_3 = 20.6$ K

FOR CR-AB2, CALCULATE MAX TENSION LOAD / LIFT POINT.

REFERENCE ATTACHED SKETCH & ABUTMENT CG. CALCULATION.

LIFT LOOPS / INSERT SHALL BE INSTALLED SUCH THAT LOAD AT Ⓒ IS APPROXIMATELY EQUAL TO 25-TON AND LOAD AT Ⓓ IS APPROXIMATELY EQUAL TO 30-TON.

$$R_c = \frac{(6'6''+4'5\tfrac{1}{2}'')}{23'-11''}\,109^K = 49.9^K$$

$$R_D = 109^K - R_c = 59.1^K$$

LOAD Ⓒ SHALL ENGAGE (2) SETS OF LIFT LOOPS AT ⑤ & ⑥ AS SHOWN ON SKETCH

$$R_5 = \frac{4'-5\tfrac{1}{2}''}{8'-1\tfrac{7}{8}''}R_c = 27.3^K \qquad R_6 = R_c - 27.3^K = 22.6^K$$

LOAD Ⓓ SHALL ENGAGE (1) SET OF LIFT LOOPS AT ⑦ & (1) LIFT ANCHOR AT ⑧

$$R_7 = R_8 = R_D/2 = 59.1/2 = 29.6^K$$

IN REVIEW, FOR ABUTMENTS 1 & 2;

① MAX LOAD ON (1) LIFT LOOP = 29.6K "LOAD D" AT "LOCATION 7"
LIFT LOOP HANDLED WITH 60° SLING ANGLE
DESIGN LOAD / LIFT LOOP = 29.6/0.866 = 34.2K

② MAX LOAD ON (1) LIFT ANCHOR = 29.6K "LOAD D" AT "LOCATION 8"
LIFT ANCHOR HANDLED WITH 56.5° SLING ANGLE
DESIGN LOAD / LIFT ANCHOR = 29.6/SIN 56.5° = 35.5K

① 0.600"ϕ STRAND LIFT LOOP DESIGN

* FROM PCI LITERATURE, TABLE 5.2.3:

USE (4) 0.600"ϕ 270 KSI STRAND LIFT LOOPS.

MIN. EMBEDMENT 4'-2"

INTERPOLATE FROM TABLE BETWEEN 45° & 90° LIFT ANGLE FOR STRAND LOOPS & APPLY 1.1 FACTOR FOR 0.600"ϕ STRAND LOOPS:

$$SWL(4:1\ S.F.) = \frac{(41+29)}{2} \times 1.1 = 38.5^K > 34.2^K \quad \underline{O.K.} \checkmark$$

* ALSO CHECK USING PCI FIGURE 6.15.7A, CASE 6, ATTACHED:

$$\phi P_c = \phi 2.67 \lambda f'^{0.5}_{ci} (x_1)(y_1)$$

$$= 0.85(2.67)(1.0)(3500)^{0.5}(36")(66")/1000$$

$$= 319^K$$

FOR S.F. 4:1: $SWL = 319^K/4 = 79.8^K \gg 34.2^K$ O.K. ✓

② LIFT ANCHOR DESIGN:

USE (1) 20 TON SWIFT LIFT ANCHOR × 19¾" LONG IN T/CREEKWALL. W/ (4) ½"ϕ STRANDS LOOPED TIGHT AROUND FOOT OF ANCHOR WITH 9'-9" EMBEDMENT.

$SWL(4:1\ S.F.) = 40^K > 35.5^K$ O.K.

SEE ATTACHED PRODUCT LITERATURE

DUE TO EDGE DISTANCE LIMITATIONS,

CHECK USING PCI FIG. 6.15.7A, CASE 3, ATTACHED.

$$\phi P_c = \phi 2.67 \lambda f'^{0.5}_{ci} (x_1)(y_1 + 2l_e)$$

$$= (0.85)(2.67)(1.0)(3500)^{0.5}(36")(0 + 2 \times 19\tfrac{3}{4}")/1000$$

$$= 190.9^K$$

FOR S.F. = 4:1

SWL = 190.9/4 = 47.7 K > 35.5 K O.K. ✓

ALSO USE (4) 1/2" ϕ STRANDS LOOPED TIGHTLY AROUND FOOT OF SL 20T x 19 3/4", MIN EMBED 9'-9:

FROM PCI TABLE 5.2.3, ATTACHED,

SWL(4:1 S.F.) = 41 K > 35.5 K O.K. ✓

(EDGE DISTANCE CONSIDERATION OK. BY PREVIOUS CHECK ABOVE)

▶ CHECK HANDLING STRESSES IN ABUTMENTS

* CR-AB1: $l_{ABUT} = 39'-3"$ $W_T = 98{,}100\#$ $w = \frac{98.1}{39'3"} = 2.50$ KLF

MAX. STRESS BETWEEN LIFT LOOP AT ② & ③, $l = 15'-0"$

$M = wl^2/8 = 2.5\text{ KLF}\frac{(15'-0")^2}{8} \times 1.3 = 91.4$ K-FT

$S = bh^2/6 = (36-24)(54)^2/6 = 5{,}832\text{ in}^3$

$f = \frac{M}{S} = \frac{(91.4\text{ KFT})(12)(1000)}{5832}$ 188 psi < 296 psi O.K.

$f'_r = 5\sqrt{f'_{ci}} = 5\sqrt{3500} = 296$ psi

* CR-AB2 $l_{ABUT} = 38'-7"$ $W_T = 109{,}000\#$ $w = \frac{109.}{38'-7"} = 2.83$ KLF

MAX STRESS BETWEEN LIFT LOOP AT ⑥ & ⑦, $l = 15'-0"$

$M = wl^2/8 = 2.83\text{ KLF}(15'-0")^2/8 \times 1.3 = 103$ K-FT

$S = bh^2/6 = (36-24)(64.25)^2/6 = 8{,}256\text{ in}^3$

$f = M/S = \frac{(103)(12)(1000)}{8{,}256} = 150$ psi < 296 psi O.K. ✓

TH4 Bridge 4 over Whitney Brook, Craftsbury, VT
Abutment Handling

J. P. Carrara & Sons, Inc.
Project 23478-015
Rev. 1

CR-AB1

W_T = 98,100 LBS.

INSTALL (4) 0.600"ϕ 270 KSI STRAND LIFT LOOPS AT EACH OF (4) LIFT LOCATIONS
EMBED / PROJECT AS SHOWN. RIGGING LENGTHS AS SHOWN.

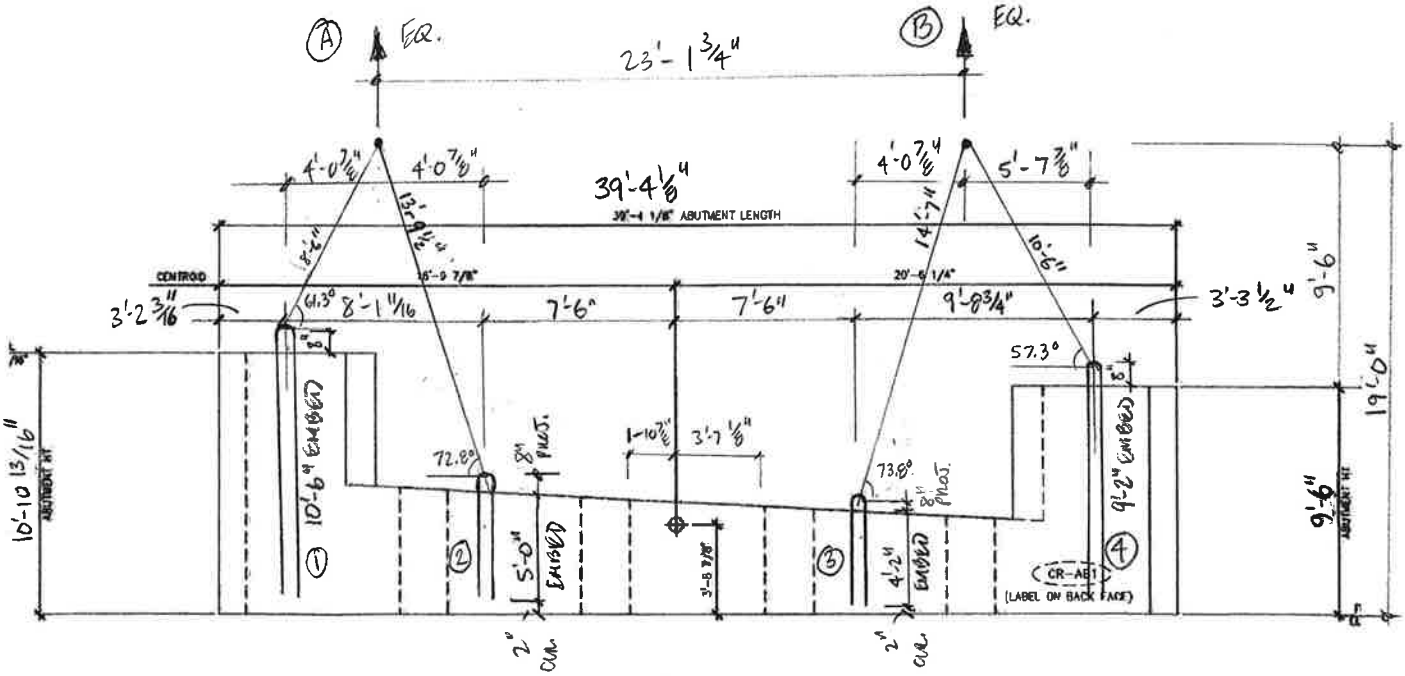

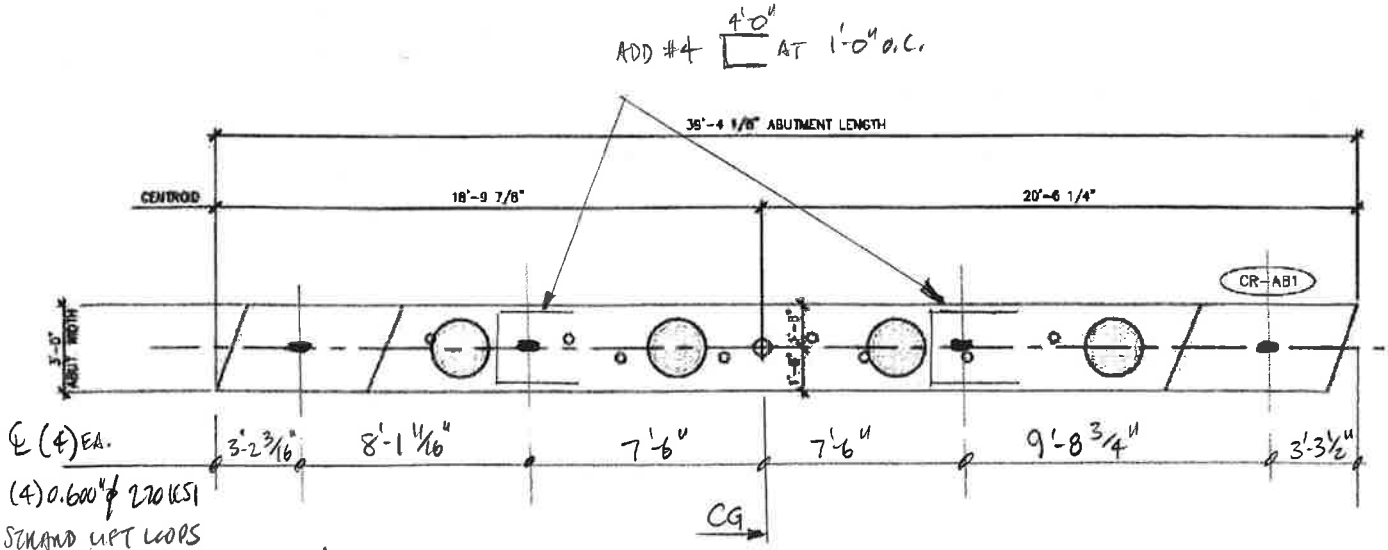

NOT TO SCALE

TH4 Bridge 4 over Whitney Brook, Craftsbury, VT
Abutment Handling

J. P. Carrara & Sons, Inc.
Project 23478-015
Rev. 1

CR-AB2

W_t = 109,900 LBS.

INSTALL (4) 0.600"ϕ 270 KSI STRAND LIFT LOOPS AT EACH OF (3) LOCATIONS & INSTALL (1) 20 TON x 19¾" S.L. ANCHOR WITH (4) ½"ϕ 270 KSI STRANDS LOOPED TIGHTLY AROUND FOOT: EMBEDMENT & PROJECTIONS AS SHOWN. RIGGING LENGTHS AS SHOWN.

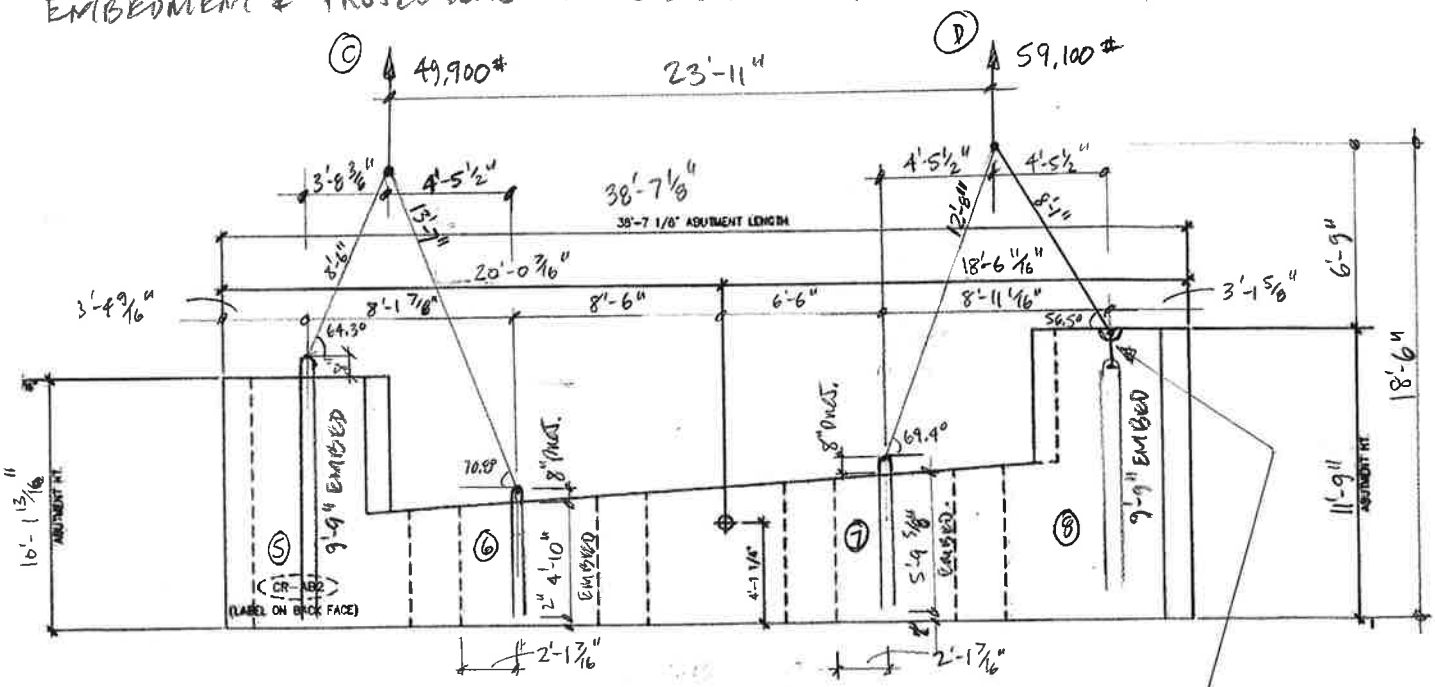

LOCATION OF (1) 20T x 19¾ S.L. ANCHOR W/ (4) ½"ϕ STRAND LOOPS PLACED TIGHTLY AROUND FOOT & EMBEDDED 9'-9"

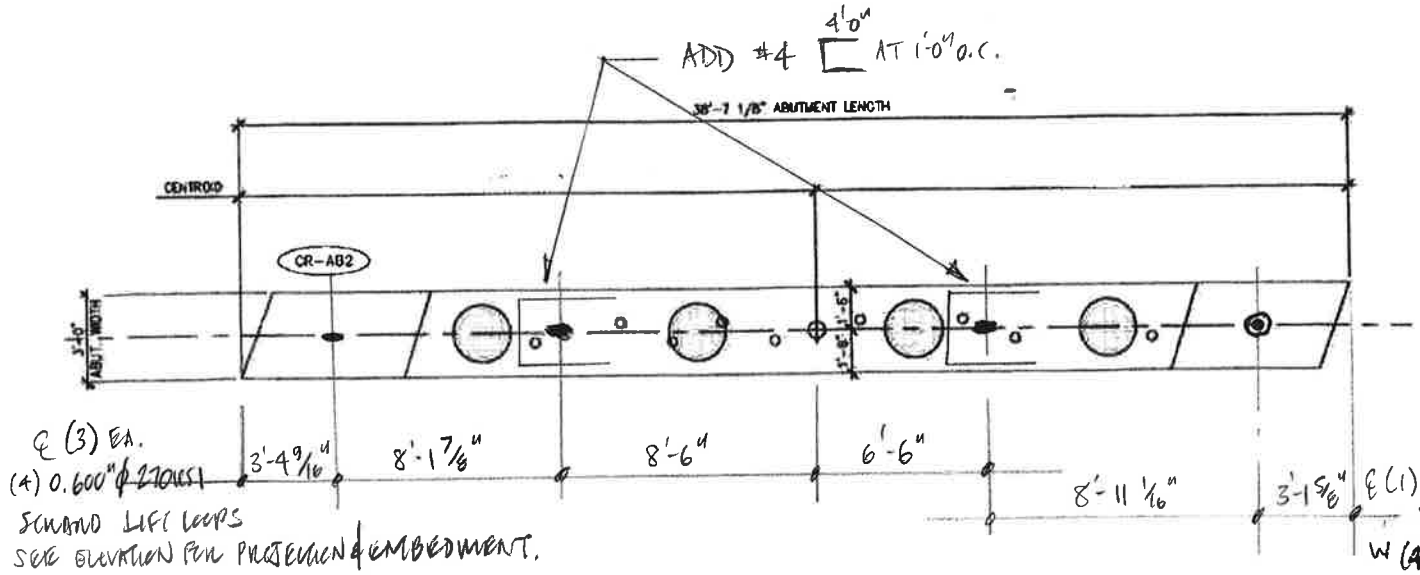

NOT-TO-SCALE.

TH4 (Creek Rd) Bridge 4 over Whitney Brook
Craftsbury, VT Bridge

J. P. Carrara & Sons, Inc.
Project 23478-015
2/16/16 Rev 0

Precast Abutment CG Calculation

Craftsbury Abut 1: CR-AB1 l= 39'-4 1/8"

Area	size x in	y in	thick in		x-bar in	y-bar in	Volume ft^3		x-bar*V	y-bar*V
1	77.125	130.8125	36	rect	38.5625	65.40625	210.18571		8105.286	13747.46
2	79.875	114	36	rect	432.1875	57	189.70313		81987.32	10813.08
3	315.125	47.375	36	rect	234.6875	23.6875	311.02181		72992.93	7367.329
4	315.125	17.125	36	tri	182.1667	53.08333	56.213704	tri	10240.26	2984.011
5	13.125	130.8125	-36	tri	4.375	65.40625	-17.884521	tri	-78.2448	-1169.76
6	14.75	65.9375	-36	tri	72.20833	97.84375	-10.131022	tri	-731.544	-991.257
7				tri		0	0	tri	0	0
8	13.125	114	-36	tri	467.75	57	-15.585938	tri	-7290.32	-888.398
9	15	67.03125	-36	tri	397.25	80.48438	-10.473633	tri	-4160.65	-842.964
10				cyl		0	0	cyl	0	0
11	12	63.8125	-1	cyl	101	31.90625	-16.706073	cyl	-1687.31	-533.028
12	12	58.9375	-1	cyl	191	29.46875	-15.429801	cyl	-2947.09	-454.697
13	12	54.0625	-1	cyl	281	27.03125	-14.153529	cyl	-3977.14	-382.588
14	12	49.1875	-1	cyl	371	24.59375	-12.877257	cyl	-4777.46	-316.7
									147676	29332.49
							653.88257	ft^3		
									225.8449 in.	44.85895 in.
							98,082	lbs.	x-bar	y-bar
							49.04	T	18.82041 ft.	3.738246 ft.
									18' 9-7/8"	3' 8-7/8"

Craftsbury Abut 2: CR-AB2 l= 38'-7 1/8"

Area	size x in	y in	thick in		x-bar in	y-bar in	Volume ft^3		x-bar*V	y-bar*V
1	80.25	121.8125	36	rect	40.125	60.90625	203.65527		8171.668	12403.88
2	74.375	141	36	rect	425.9375	70.5	218.47656		93057.36	15402.6
3	308.5	56.3125	36	rect	234.5	28.15625	361.92513		84871.44	10190.45
4	308.5	19.875	36	tri	285.9167	62.9375	63.869141	tri	18261.25	4019.764
5	13.125	121.8125	-36	tri	4.375	60.90625	-16.654053	tri	-72.8615	-1014.34
6	11.5	65.875	-36	tri	76.41667	88.875	-7.891276	tri	-603.025	-701.337
7				tri		0	0	tri	0	0
8	13.125	141	-36	tri	458.75	70.5	-19.277344	tri	-8843.48	-1359.05
9	11.375	64.4375	-36	tri	392.5417	108.7813	-7.6351725	tri	-2997.12	-830.564
10				cyl		0	0	cyl	0	0
11	12	58.4375	-1	cyl	101	29.21875	-15.298902	cyl	-1545.19	-447.015
12	12	64.25	-1	cyl	191	32.125	-16.820611	cyl	-3212.74	-540.362
13	12	70	-1	cyl	281	35	-18.325957	cyl	-5149.59	-641.409
14	12	75.25	-1	cyl	371	37.625	-19.700404	cyl	-7308.85	-741.228
									174628.9	35741.39
							726.32239	ft^3		
									240.4289 in.	49.20872 in.
							108,948	lbs.	x-bar	y-bar
							54.47	T	20.03574 ft.	4.100726 ft.
									20' 7/16"	4' 1-3/16"

Fig. 5.2.10 Arrangement for equalizing lifting loads

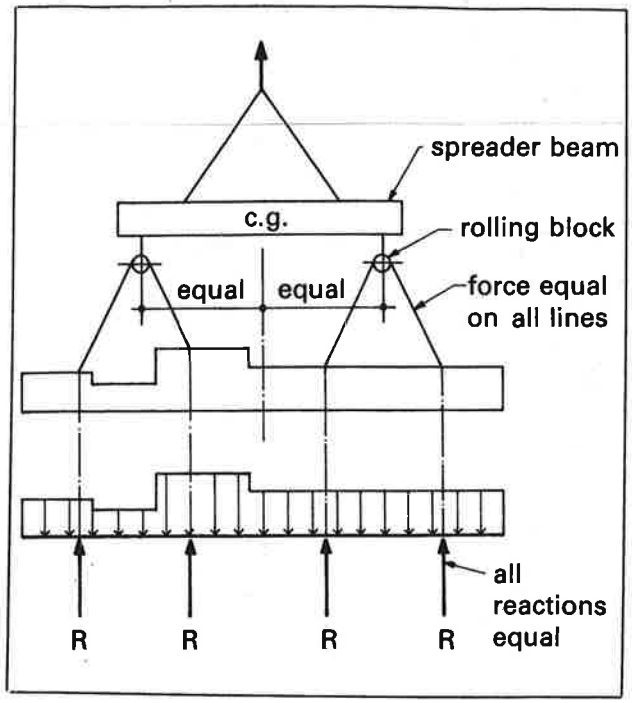

lines equal. The member can then be analyzed as a beam with varying load supported by equal reactions.

The force in inclined lift lines can be determined from Fig. 5.2.7.

5.2.8 Handling devices

The most common lifting devices are prestressing strand or cable loops projecting from the concrete, threaded inserts, or special proprietary devices.

Since lifting devices are subject to dynamic loads, ductility of the material is part of the design requirement. Deformed reinforcing bars should not be used since the deformations result in stress concentrations from the shackle pin. Also, reinforcing bars are often hard-grade or re-rolled rail steel with little ductility and low impact strength at cold temperatures. Smooth bars of a known steel grade may be used if adequate embedment or mechanical anchorage is provided. The diameter must be such that localized failure will not occur by bearing on the shackle pin.

Prestressing strand is often used for lifting loops. The variables involved make it almost impossible to calculate a capacity which can be used for all situations. Generally, producers will establish standard criteria for use in handling the standard products manufactured by that plant. Table 5.2.3 is an example which has been used successfully.

Reduced capacities for shorter embedment lengths may be suitable. In shallow products, providing a 90° bend can reduce the required embedment length significantly. Lightly rusted strand has better bond than bright strand.

The diameter of the bend of the loop should be at least 4 in. For smaller diameters, the loop capacities in Table 5.2.3 should be reduced to:

1 in. dia. — 70 %
2 in. dia. — 85 %
3 in. dia. — 90 %

The angle of incline of lifting has little effect on the strand lifting loop capacity if the angle from the horizontal is more than about 20°. Typical handling methods are usually such that this angle is no less than 60°.

Table 5.2.3 Capacity of ½ in. diameter, 270 ksi strands used as lifting loops

Lifting angle		Embedment length (in.)	Single loop (kips)	Double loop (kips)	Triple loop (kips)
45 degrees	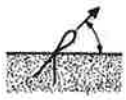	16	5	8.5	11.5
		22	8	13	17.5
		28	10	18	23
		34	11	23	29
Vertical	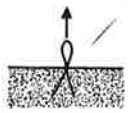	16	7.5	12.5	16.5
		22	11.5	19	24.5
		28	15.5	25.5	33
		34	16	32.5	41

1. These values are limited by slippage rather than strand strength, with a factor of safety of 4. For other strand diameters, multiply table values by 0.75 for ⅜ in. diameter, 0.85 for 7/16 in. diameter, and 1.1 for 0.6 in. diameter.
2. Minimum f'_c = 3000 psi.
3. Multiple strand loops must be fabricated to ensure equal force on each strand.

Figure 6.15.7A (continued) Design tensile strength for $h \geq h_{min}$, ϕP_{c1}—Case 6

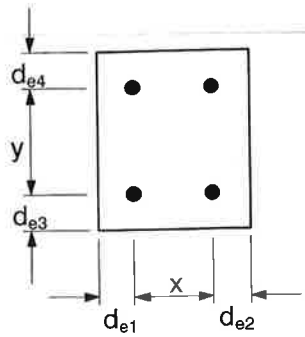

x and y are the overall dimensions (width and length) of the stud group.

Case 6: Free edges on four adjacent sides

$\phi P_{c1} = \phi 2.67 \lambda \sqrt{f'_c}\,(x_1)(y_1)$

$\phi = 0.85$

where: x_1 and y_1 are the dimensions of the flat bottom of the part of the truncated pyramid.

For Case 6: $x_1 = x + d_{e1} + d_{e2}$ $\quad y_1 = y + d_{e3} + d_{e4}$

Note: Table values are based on $\lambda = 1.0$ and $f'_c = 5000$ psi;

for different material properties, multiply table values by $\lambda\sqrt{f'_c/5000}$

ℓ_e in.	y_1, in. \ x_1, in.	Design tensile strength, ϕP_{c1} (kips)														
		2	4	6	8	10	12	14	16	18	20	22	24	26	28	30
3	0	0	0	0	0	0	0	0	0	0	0	0	0	0	0	0
	2	1	1	2	3	3	4	5	5	6	7	7	8	9	9	9
	4	1	3	4	5	7	8	9	10	11	13	14	15	17	18	19
	6	2	4	6	8	9	11	13	15	17	19	21	23	25	27	29
	8	3	5	8	10	13	15	18	21	23	25	29	31	33	36	39
	10	3	7	9	13	16	19	23	25	29	32	35	39	42	45	48
	12	4	8	11	15	19	23	27	31	35	39	42	46	50	54	58
	14	5	9	13	18	23	27	31	36	41	45	49	54	59	63	67
	16	5	10	15	21	25	31	36	41	46	51	35	61	67	72	77
4	0	0	0	0	0	0	0	0	0	0	0	0	0	0	0	0
	2	1	1	2	3	3	4	5	5	6	7	7	8	9	9	9
	4	1	3	4	5	7	8	9	10	11	13	14	15	17	18	19
	6	2	4	6	8	9	11	13	15	17	19	21	23	25	27	29
	8	3	5	8	10	13	15	18	21	23	25	28	31	33	36	39
	10	3	7	9	13	16	19	23	25	29	32	35	39	42	45	48
	12	4	8	11	15	19	23	27	31	35	39	42	46	50	54	58
	14	5	9	13	18	23	27	31	36	41	45	49	54	59	63	67
	16	5	10	15	21	25	31	36	41	46	51	57	61	67	72	77
6	0	0	0	0	0	0	0	0	0	0	0	0	0	0	0	0
	2	1	1	2	3	3	4	5	5	6	7	7	8	9	9	9
	4	1	3	4	5	7	8	9	10	11	13	14	15	17	18	19
	6	2	4	6	8	9	11	13	15	17	19	21	23	25	27	29
	8	3	5	8	10	13	15	18	21	23	25	28	31	33	36	39
	10	3	7	9	13	16	19	23	25	29	32	35	39	42	45	48
	12	4	8	11	15	19	23	27	31	35	39	42	46	50	54	58
	14	5	9	13	18	23	27	31	36	41	45	49	54	59	63	67
	16	5	10	15	21	25	31	36	41	46	51	57	61	67	72	77
8	0	0	0	0	0	0	0	0	0	0	0	0	0	0	0	0
	2	1	1	2	3	3	4	5	5	6	7	7	8	9	9	9
	4	1	3	4	5	7	8	9	10	11	13	14	15	17	18	19
	6	2	4	6	8	9	11	13	15	17	19	21	23	25	27	29
	8	3	5	8	10	13	15	18	21	23	25	28	31	33	36	39
	10	3	7	9	13	16	19	23	25	29	32	35	39	42	45	48
	12	4	8	11	15	19	23	27	31	35	39	42	46	50	54	58
	14	5	9	13	18	23	27	31	36	41	45	49	54	59	63	67
	16	5	10	15	21	25	31	36	41	46	51	57	61	67	72	77

P52 Swift Lift® Anchor Tensile and Shear Capacity

When anchors are used in the face of thin concrete elements

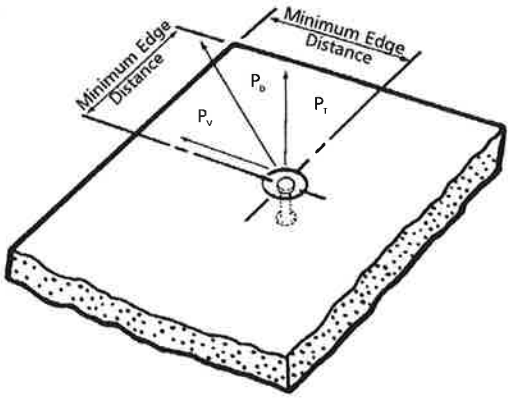

The following table lists the P52 Swift Lift Anchors that are currently manufactured. Other sizes and lengths are available on special order. However, the sizes and lengths of anchors shown will handle the majority of flat precast concrete elements.

When the P52 Swift Lift Anchor is properly embedded in normal weight concrete, the tabulated working loads are applicable for any direction of load. This applies even if the direction of load is parallel to the axis of the anchor, perpendicular to it or at any other angle.

Minimum distance between anchors is twice the minimum edge distance.

It is critical to remember that in order to obtain the safe working loads listed in the table below, the normal weight concrete must have obtained the minimum concrete strength shown, prior to initial load application.

Swift Lift Anchor Ton x Length	Safe Working Load	Minimum Concrete Strength	Minimum Edge Distance
1 ton x 2-5/8"	1,700 lbs.	3,500 psi	8"
1 ton x 3-3/8"	2,000 lbs.	2,200 psi	10"
1 ton x 4-3/4"	2,000 lbs.	1,600 psi	10"
1 ton x 8"	2,000 lbs.	1,600 psi	10"
1 ton x 9-1/2"	2,000 lbs.	1,600 psi	10"
2 ton x 2-3/4"	2,100 lbs.	3,500 psi	8"
2 ton x 3-3/8"	2,900 lbs.	3,500 psi	10"
2 ton x 4-3/4"	4,000 lbs.	3,500 psi	10"
2 ton x 5-1/2"	4,000 lbs.	1,600 psi	13"
2 ton x 6"	4,000 lbs.	1,600 psi	13"
2 ton x 6-3/4"	4,000 lbs.	1,600 psi	13"
2 ton x 11"	4,000 lbs.	1,600 psi	14"
4 ton x 3-3/4"	4,000 lbs.	3,500 psi	12"
4 ton x 4-1/4"	4,900 lbs.	3,500 psi	13"
4 ton x 4-3/4"	5,800 lbs.	3,500 psi	14"
4 ton x 5-1/2"	7,400 lbs.	3,500 psi	17"
4 ton x 5-3/4"	7,900 lbs.	3,500 psi	17"
4 ton x 7-1/8"	8,000 lbs.	1,800 psi	20"
4 ton x 9-1/2"	8,000 lbs.	1,600 psi	17"
4 ton x 14"	8,000 lbs.	1,600 psi	18"
4 ton x 19"	8,000 lbs.	1,600 psi	20"
8 ton x 4-3/4"	6,400 lbs.	3,500 psi	16"
8 ton x 5-1/4"	6,850 lbs.	3,500 psi	16"
8 ton x 6-3/4"	11,200 lbs.	3,500 psi	21"
8 ton x 10"	16,000 lbs.	3,500 psi	19"
8 ton x 13-3/8"	16,000 lbs.	1,600 psi	23"
8 ton x 26-3/4"	16,000 lbs.	1,600 psi	27"
20 ton x 10"	25,000 lbs.	3,500 psi	24"
20 ton x 19-3/4"	40,000 lbs.	3,500 psi	31"

Safe Working Loads provide a factor of safety of approximately 4 to1 in normal weight concrete. Safe Working Load is based on anchor setback from face of concrete "X" dimension, as shown on page 26.

Figure 6.15.7A (continued) Design tensile strength for $h \geq h_{min}$, ϕP_{c1}—Case 3

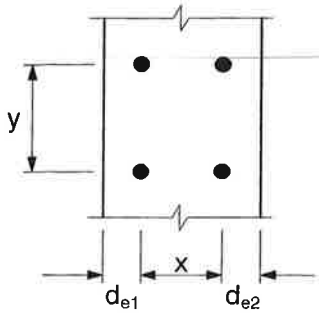

x and y are the overall dimensions (width and length) of the stud group.

Case 3: Free edges on two opposite sides

$$\phi P_{c1} = \phi 2.67 \lambda \sqrt{f'_c}\,(x_1)(y_1 + 2\ell_e)$$

$$\phi = 0.85$$

where: x_1 and y_1 are the dimensions of the flat bottom of the part of the truncated pyramid.

For Case 3: $x_1 = x + d_{e1} + d_{e2}$ $\quad y_1 = y$

Note: Table values are based on $\lambda = 1.0$ and $f'_c = 5000$ psi; for different material properties, multiply table values by $\lambda\sqrt{f'_c/5000}$

ℓ_e in.	y_1, in. \ x_1, in.	Design tensile strength, ϕP_{c1} (kips)														
		2	4	6	8	10	12	14	16	18	20	22	24	26	28	30
3	0	2	4	6	8	9	11	13	15	17	19	21	23	25	27	29
	2	3	5	8	10	13	15	18	21	23	25	28	31	33	36	39
	4	3	7	9	13	16	19	23	25	29	32	35	39	42	45	48
	6	4	8	11	15	19	23	27	31	35	39	42	46	50	54	58
	8	5	9	13	18	23	27	31	36	41	45	49	54	59	63	67
	10	5	10	15	21	25	31	36	41	46	51	57	61	67	72	77
	12	6	11	17	23	29	35	41	46	52	58	63	69	75	81	87
	14	7	13	19	25	32	39	45	51	58	64	71	77	83	90	96
	16	7	14	21	28	35	42	49	57	63	71	77	85	92	99	106
4	0	3	5	8	10	13	15	18	21	23	25	28	31	33	36	39
	2	3	7	9	13	16	19	23	25	29	32	35	39	42	45	48
	4	4	8	11	15	19	23	27	31	35	39	42	46	50	54	58
	6	5	9	13	18	23	27	31	36	41	45	49	54	59	63	67
	8	5	10	15	21	25	31	36	41	46	51	57	61	67	72	77
	10	6	11	17	23	29	35	41	46	52	58	63	69	75	81	87
	12	7	13	19	25	32	39	45	51	58	64	71	77	83	90	96
	14	7	14	21	28	35	42	49	57	63	71	77	85	92	99	106
	16	8	15	23	31	39	46	54	61	69	77	85	92	100	108	115
6	0	4	8	11	15	19	23	27	31	35	39	42	46	50	54	58
	2	5	9	13	18	23	27	31	36	41	45	49	54	59	63	67
	4	5	10	15	21	25	31	36	41	46	51	57	61	67	72	77
	6	6	11	17	23	29	35	41	46	52	58	63	69	75	81	87
	8	7	13	19	25	32	39	45	51	58	64	71	77	83	90	96
	10	7	14	21	28	35	42	49	57	63	71	77	85	92	99	106
	12	8	15	23	31	39	46	54	61	69	77	85	92	100	108	115
	14	9	17	25	33	42	50	59	67	75	83	92	100	109	117	125
	16	9	18	27	36	45	54	63	72	81	90	99	108	117	125	135
8	0	5	10	15	21	25	31	36	41	46	51	57	61	67	72	77
	2	6	11	17	23	29	35	41	46	52	58	63	69	75	81	87
	4	7	13	19	25	32	39	45	51	58	64	71	77	83	90	96
	6	7	14	21	28	35	42	49	57	63	71	77	85	92	99	106
	8	8	15	23	31	39	46	54	61	69	77	85	92	100	108	115
	10	9	17	25	33	42	50	59	67	75	83	92	100	109	117	125
	12	9	18	27	36	45	54	63	72	81	90	99	108	117	125	135
	14	9	19	29	39	48	58	67	77	87	96	106	115	125	135	144
	16	10	21	31	41	51	61	72	82	92	103	113	123	133	143	154

WING WALLS

$f'_{ci} = 3500$ $f'_c = 5000$ THICKNESS = 18"

WEIGHTS: $W_{Tunit1} = 18^k$ $W_{Tunit2} = 19.5^k$ $W_{Tunit3} = 18.8^k$ $W_{Tunit4} = 18.5^k$

✓ CONTROLS

STRIPPING / SHIPPING - PANEL IS FLAT

USE (4) LIFTERS IN FACE OF PANEL LOCATED SYMMETRICALLY ABOUT CG OF PANEL, APPROXIMATELY AT 1/5 POINTS, EA. WAY

TENSION LOAD / LIFT POINT = $19.5^k/4 = 4.9^k$

FROM ATTACHED PRECAST MANUAL, DAYTON PAGE 26":

USE (4) 4-TON x 7 1/8" SWIFT LIFT ANCHORS, SWL (4'1 S.F.) = $8^k > 4.9^k$ OK ✓

ERECTION - ROLL PANEL ABOUT BOTTOM EDGE USING (2) LIFTONS @ TOP EDGE

MAKE APPROXIMATE CHECK FOR CRACKING OF PANEL DURING PANEL ROTATION; USE TALLEST WING WALL x 12'-5" HEIGHT MAX.

$W = 150 \times 1.5 = 225$ PLF (18" THICK)

$M = wl^2/8 = (1.3)(225\text{ PLF})(12.42')^2/8 = 5{,}640$ LB-FT/FT (USE 1.3 FACTOR FOR ROTATION)

$S = bh^2/6 = (12)(18)^2/6 = 648 \text{ in}^3$

$f = \frac{M}{S} = \frac{(5{,}640) \times 12}{648} = 104 \text{ psi} < 5\sqrt{f'_{ci}} = 5\sqrt{3500} = 296 \text{ psi}$ OK ✓

PANELS CAN BE ROLLED UP WITH NO CRACKING

SHEAR LOAD, V, @ TOP INSERT. $= 19.5/(2)(2) = 4.9K$

FROM ATTACHED PRODUCT INFORMATION, DAYTON, PAGE 28

USE 8 TON x 13 3/8" SWIFT LIFT ANCHORS, SWL (4:1 S.F.) = 6.7K

IN 9" THICK CONCRETE PANEL & $f'_c = 4500$ PSI

∴ BY INSPECTION FOR 18" THICK PANEL & $f'_c = 5000$ PSI

SWL (4:1 S.F.) > 4.9K APPLIED SHEAR LOAD, O.K. ✓

USE #5 TIGHT TO SL NECESS

EVALUATE TOP INSERTS IN TENSION WHEN PANEL IS HANGING FROM (2) ANCHORS AT TOP EDGE:

TENSION LOAD, $T = 19.5K/2 = 9.8K$

FROM ATTACHED PRODUCT INFORMATION, DAYTON PAGE 28,

USE (2) 8 TON x 13 3/8" SWIFT LIFT ANCHORS

MECHANICAL SWL (4:1 S.F.) IN TENSION = 16K, O.K. ✓

ALSO EVALUATE TENSILE STRENGTH IN CONCRETE USING PCI FIG 6.15.7A, CASE 3, ATTACHED:

$\phi P_c = 0.85(2.67)\sqrt{5000}\,(18)(0+2\times13\tfrac{3}{8})/1000$

$= 77.3K$

FOR S.F. 4:1: SWL $= 77.3/4 = 19.3K > 9.8K$ O.K. ✓

BUT NOT GREATER THAN 16K, THE MECHANICAL SWL OF THE ANCHOR.

TOPS

P59 Swift Lift® Shear Bar
P59 Swift Lift® Smooth Wire Shear Bar

Dayton Superior Swift Lift Shear Bars (P59) are utilized when edge lifting precast elements. The shear bar is secured tightly to the recess plug and at the time of lift helps to transfer the shear load deeper into the concrete. The P59 Smooth Wire Shear Bar is designed to snap into the built-in clips on the P54 recess plug. The standard shear bar is fabricated from rebar and must be securely wired tightly to the Swift Lift recess plugs.

P59 Swift Lift Shear Bar
1-Ton and 8-Ton

To Order:
Specify: (1) quantity, (2) name, (3) system size.

Example:
200, P59 Swift Lift Shear Bars, 4-Ton.

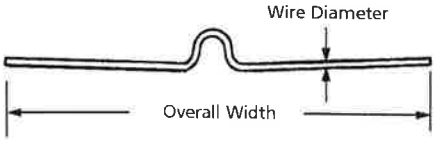

P59 Swift Lift Smooth Wire Shear Bar
2-Ton and 4-Ton

Anchor Safe Working Load (tons)	Shear Bar Type	Overall Width	Minimum Anchor Length	Wall Thickness	Minimum Corner Distance	Safe Working Load
1	Rebar	19"	4-3/4"	5"	15"	1,750 lbs.
1	Rebar	19"	4-3/4"	5-1/2"	16"	2,000 lbs.
1	Rebar	19"	4-3/4"	6"	17"	2,000 lbs.
2	Wire	24"	6-3/4"	5"	15"	1,750 lbs.
2	Wire	24"	6-3/4"	5-1/2"	16"	2,200 lbs.
2	Wire	24"	6-3/4"	6"	17"	2,600 lbs.
2	Wire	24"	6-3/4"	7"	19"	2,700 lbs.
2	Wire	24"	6-3/4"	8"	21"	2,800 lbs.
4	Wire	30"	9-1/2"	5-1/2"	16"	2,100 lbs.
4	Wire	30"	9-1/2"	6"	17"	2,200 lbs.
4	Wire	30"	9-1/2"	7"	19"	2,600 lbs.
4	Wire	30"	9-1/2"	8"	21"	2,800 lbs.
8	Rebar	34"	13-3/8"	8"	19"	5,600 lbs.
8	Rebar	34"	13-3/8"	9"	21"	6,700 lbs.

Safe Working Load provides a factor of safety of approximately 4 to 1 in 4,500 psi normal weight concrete.