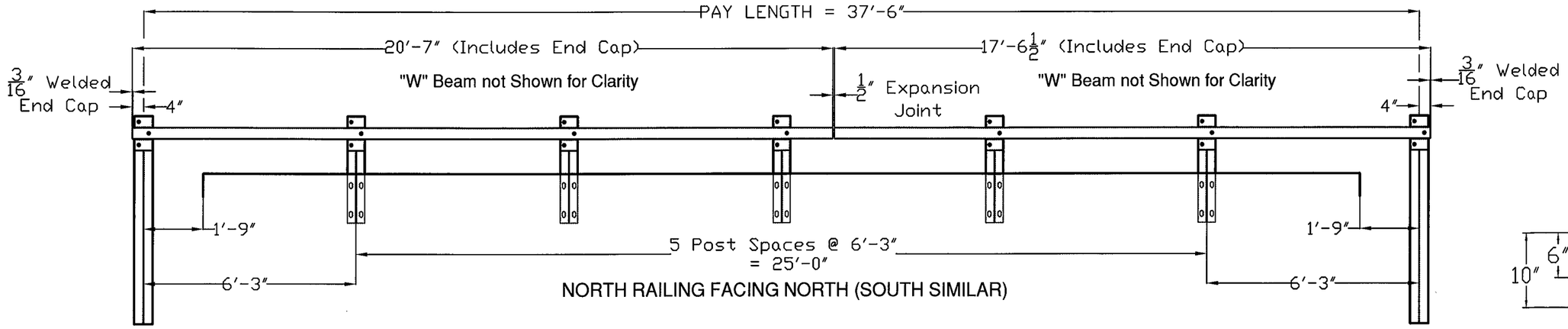

NORTH RAILING FACING NORTH (SOUTH SIMILAR)

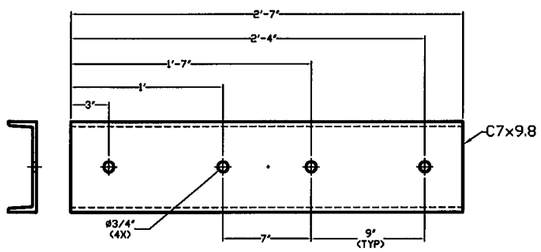

DETAIL PRIOR TO WELDING NUTS

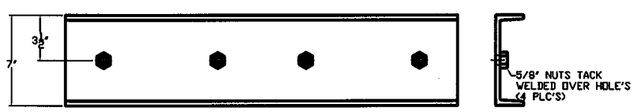

DETAIL 9

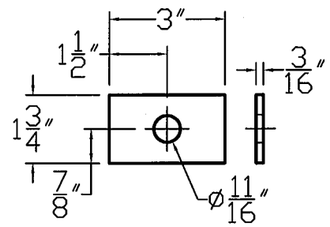

SPECIAL WASHER DETAIL

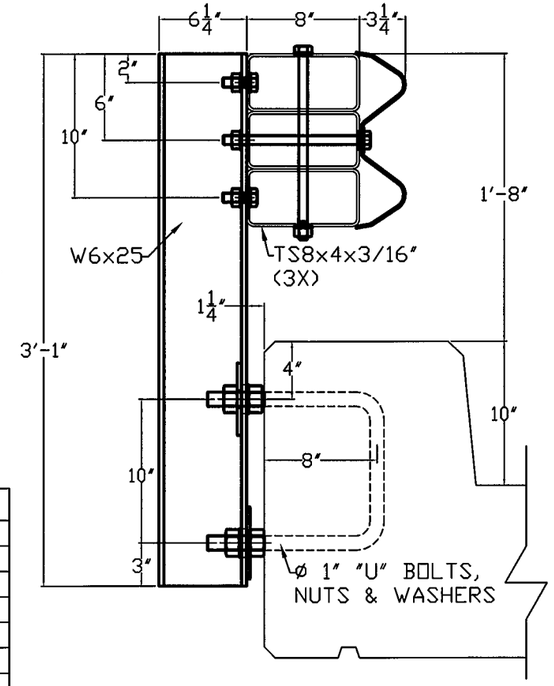

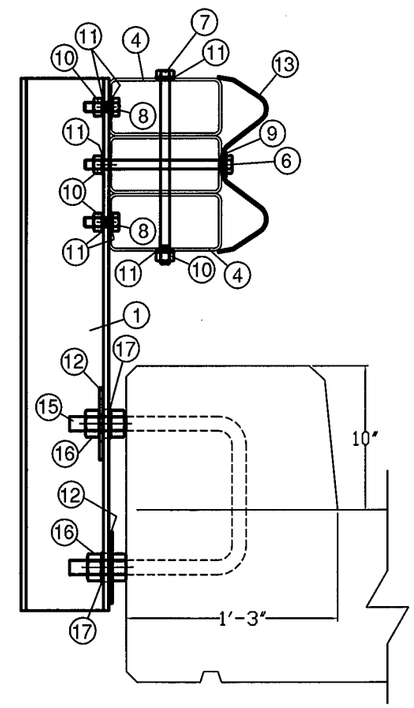

TYP. CONNECTION FOR RAILING TO POST
CURB & RAIL SECTION

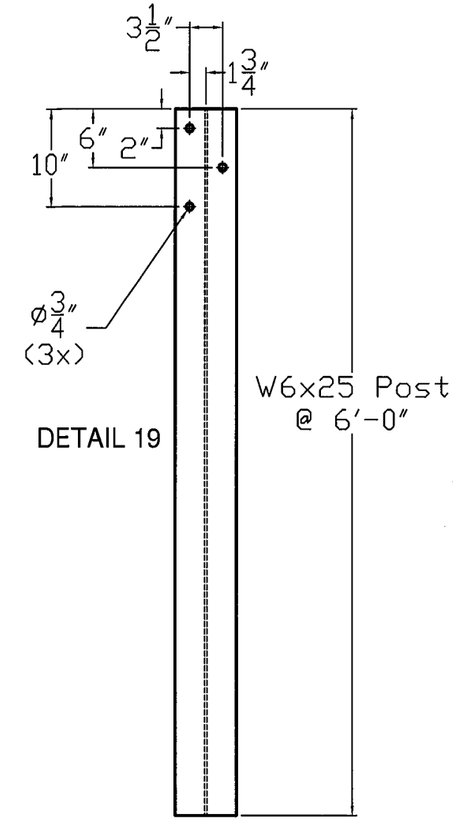

DETAIL 19

DETAIL 12

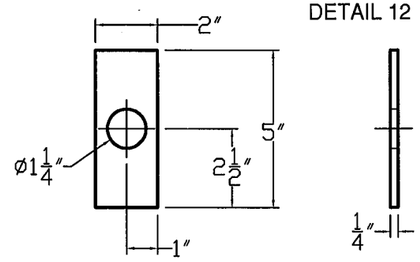

PLATE WASHER DETAIL

BILL OF MATERIALS

DET. #	QTY	DESCRIPTION	MATERIAL
1	10	W6x25 FASCIA MOUNTED POST @ 3' 1"	ASTM A572 Gr. 50
2	2	TS8x4x3/16" TUBING @ 20'-7" w/Cap	ASTM A500 Gr. B
3	2	TS8x4x3/16" TUBING @ 17'6-1/2" w/Cap	ASTM A500 Gr. B
4	20	TS8x4x3/16" TUBING @ 6"	ASTM A500 Gr. B
5	2	C7x9.8 CHANNEL @ 2' 7" (SPLICE)	ASTM A572 Gr. 50
6	14	5/8"x10" HEX BOLT	ASTM A325
7	14	5/8"x13" HEX BOLT	ASTM A325
8	36	5/8"x1-3/4" HEX BOLT	ASTM A325
9	14	3/16"x1-3/4"x3" SPECIAL WASHER	ASTM A572 Gr. 50
10	64	5/8" HEX NUT	ASTM A563
11	92	5/8" FLAT WASHER	ASTM A436
12	40	1/4"x2"x5" PLATE WASHER	ASTM A572 Gr. 50
13	6	10 GAUGE "W" BEAM @ 12' 6"	AASHTO M180-Cl B, TYPE II
14	64	5/8"x1-1/4" SPLICE ROUND HEAD BOLT	ASTM A307
14a	64	5/8" RECESSED NUT for PANEL SPLICE	ASTM A307
15	20	"U" ANCHOR BOLTS	ASTM A449
16	80	1" HEX NUT	ASTM A563
17	80	1" FLAT WASHER	ASTM F436
18	4	DELINEATOR	ALUMINUM

ITEM #: 900.640

CONTRACTOR: F R LaFayette - 27795

SHEET 1 OF 2

APPROVED BY:

Special Provision Fascia Mounted Steel Bridge Rail
Town of Woodstock County of Windsor Bridge No. 13

R	NO.	DATE	DESCRIPTION	BY	R	NO.	DATE	DESCRIPTION	BY
E	1	5/28/13	Added 4ea. W6x25 Post @ 6'-0", one for Each Corner	D.L.	E				
V	2	7/3/13	Implemented Revisions per J.S. on June 23, 2013	D.L.	V				

ELDERLEE, INC.
OAKS CORNERS, NEW YORK 14518
E-Mail: dlong@elderlee.com
Tel: 315-789-6670 Fax: 315-789-6615

ACTIVE MEMBER

DRAWN	D.L.	5/20/13
CHECKED	E.P.	5/20/13
APPROVED		
SCALE	SCHEMATIC	
DRAWING NO.	F R LAFAYETTE EM13-064R	

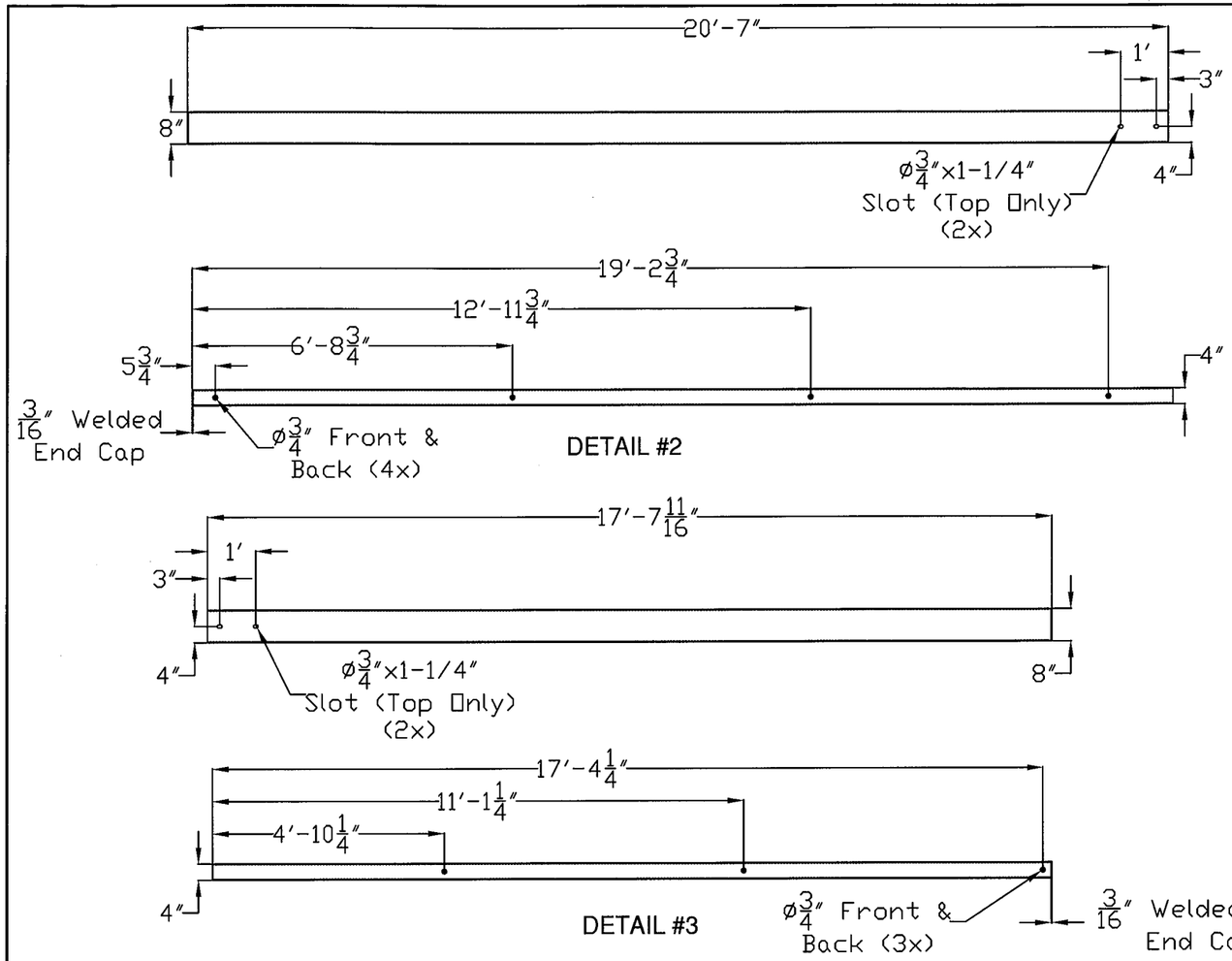

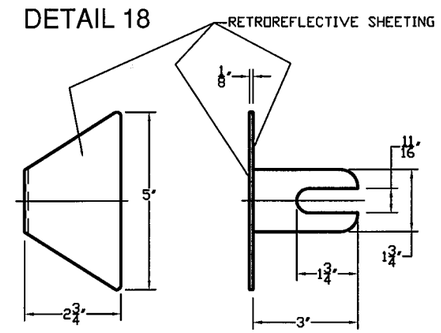

DELINEATOR DETAIL

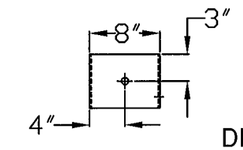

DETAIL 4

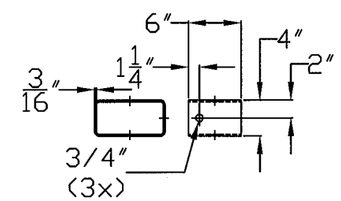

BLOCK OUT DETAIL

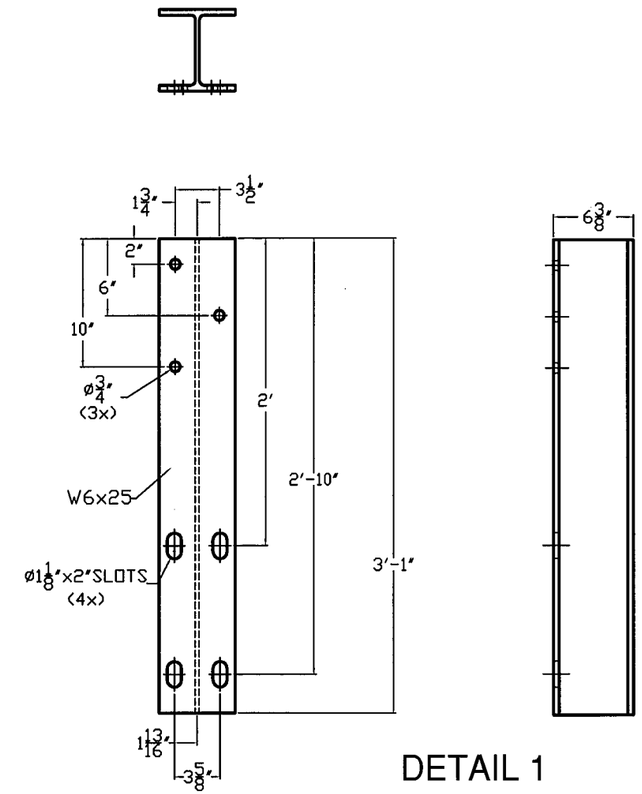

DETAIL 1

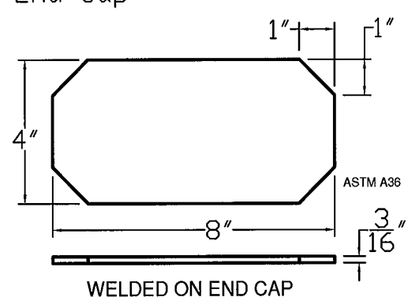

WELDED ON END CAP

RAIL SPLICE HOLES
(HARDWARE NOT SHOWN FOR CLARITY)

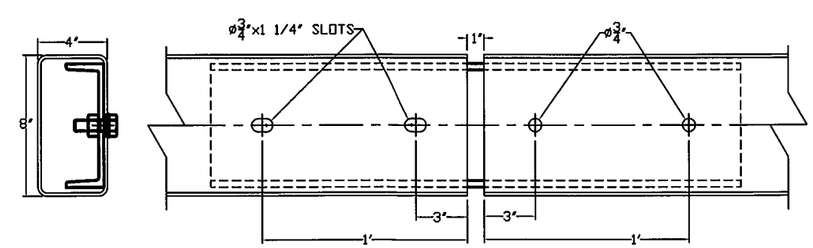

NOTES:

1. - ALL WORK AND MATERIALS SHALL CONFORM TO SECTION 525.
2. - PRIOR TO GALVANIZING THE ASSEMBLED POST, GRIND ALL EDGES TO A MINIMUM RADIUS OF 1/16".
3. - ALL POSTS SHALL BE SET NORMAL TO GRADE.
4. - SPLICES FOR THE STEEL BEAM GUARDRAIL SHALL LAP IN THE DIRECTION OF TRAFFIC.
5. - A RAILING JOINT SPLICE SHALL BE PROVIDED IN ANY RAIL BAY SPANNING THE END OF THE INTEGRAL ABUTMENT BRIDGE AND AT ALL SUPERSTRUCTURE EXPANSION JOINTS.
6. - SEE STANDARD DRAWING G-1 FOR DETAILS OF DELINEATORS. A DELINEATOR SHALL BE INSTALLED AT 30 FOOT SPACING OR THE NEAREST POST. WHITE IS TO BE INSTALLED ON THE DRIVER'S RIGHT. FOR ONE WAY BRIDGES, YELLOW IS TO BE INSTALLED ON THE DRIVER'S LEFT.
7. - THE 1/2" EXPANSION JOINT SHOWN IN THE RAILING ELEVATION IS DESIGNED FOR THE BRIDGE LENGTHS UP YO 80 FEET, ANY LONGER SPANS WILL HAVE TO BE MODIFIED TO ACCOUNT FOR THEIR MOVEMENT.
8. - FOR RADII LESS THAN 950 FEET, HSS8x4 TUBES SHALL BE SHOP BENT TO FIT THE APPLICABLE CURVE.
9. - THIS RAILING MEETS THE REQUIREMENTS FOR A TL-2 SERVICE LEVEL.

ITEM #: 900.640

CONTRACTOR: F R LaFayette - 27795

SHEET 2 OF 2

APPROVED BY:

Special Provision Fascia Mounted Steel Bridge Rail

Town of Woodstock County of Windsor Bridge No. 13

R	NO.	DATE	DESCRIPTION	BY	R	NO.	DATE	DESCRIPTION	BY
E	1	5/28/13	Added 4ea. W6x25 Post @ 6'-0", one for Each Corner	D.L.	E				
V	2	7/3/13	Implemented Revisions per J.S. on June 23, 2013	D.L.	V				

ELDERLEE, INC.
OAKS CORNERS, NEW YORK 14518
E-Mail: dlong@elderlee.com
Tel: 315-789-6670 Fax: 315-789-6615

ACTIVE MEMBER

DRAWN	D.L.	5/20/13
CHECKED	E.P.	5/20/13
APPROVED		
SCALE	SCHEMATIC	
DRAWING NO.	F R LAFAYETTE EM13-064R	