ENGINEERING VENTURES INC

208 Flynn Avenue, Suite 2A, Burlington, VT 05401 · Tel: 802-863-6225 · Fax: 802-863-6306
85 Mechanic Street, Suite 350A, Lebanon, NH 03766 · Tel: 603-442-9333 · Fax: 603-442-9331
18 Division Street, Saratoga Springs, NY 12866 · Tel: 518-224-0004

Design Calculations

For:

Town Highway over Bridgewater Brook
Bridge Replacement

Woodstock, Vermont

For:

S.D. IRELAND CONCRETE

Submitted On:

Submitted on 5/30/2013

For Record

STATE OF VERMONT
DAVID W. BOEHM
No. 3581
REGISTERED
PROFESSIONAL ENGINEER
5/31/13

Index:

	Page
Basis of Design	1
Anchored Wall Design	2
Anchored Wall Foundation Design	9
Rigid Frame Design	15
Rigid Frame Foundation Design	20
Headwall and Rail Attachment Design	24
Lap Lengths	25
Load Rating	26
Load Rating Summary	47
Appendix A, B and C	48

BASIS OF DESIGN:

Referenced Drawing –

- "Woodstock" Project Number BRO 1444(55), Dated 2/13/2013
- Vermont Agency of Transportation Standard Drawing S-367A, Dated 6/11/12

Referenced Codes –

- AASHTO LRFD Bridge Design Specifications, 2012 with Latest Revisions
- AASHTO The Manual for Bridge Evaluation, Second Edition, 2011
- State of Vermont, Agency of Transportation, 2011 Standard Specifications for Construction

Loading Required –

- Design Traffic: HL-93
- Rating Traffic: H-20, HL-93, 3S2, 6 Axle, 3A Str, 4A Str and 5A semi
- Rails: TL-3

General Design Parameters –

- γ_{soil} = 125pcf (foundation), 140pcf (retained)
- $\gamma_{concrete}$ = 150pcf
- $\varphi = 36°$
- $\beta_{normal_to_wall} = 16°$
- $K_A = \tan^2(45-\varphi/2) = 0.260$
- $K_P = \tan^2(45+\varphi/2) = 3.852$
- $K_0 = 1 - \sin\varphi = 0.412$
- Coefficient of Friction, $\mu = 0.35$ (formed concrete against soil), 0.55 (concrete cast against soil)
- Nominal Bearing resistance = 10.0ksf (for footings widths > 6ft)
- Bearing Resistance Factor = 0.45
- Sliding Resistance Factor = 0.80 (assumed)
- F'_c = 6ksi
- F_y = ASTM A615 GRADE 60
- All exposed steel to be galvanized
- Reinforcing Tolerances: +/-1" Spacing, +/- 0.25" Clearance
- Precast Tolerances: +/-0.25" Height and Width, +/- 0.50" Length
- Hydrostatic pressure has been included due to the lack of weep holes in the rigid frame and wing walls
- General Strength I Factors: (AASHTO 3.4)
    - DL = 1.25/0.9
    - EL = 1.35/1.0
    - LL = 1.75
    - Surcharge = 1.5/1.0
- Bolts to be galvanized ASTM A325, uno
- Threaded rods to be galvanized ASTM F1554 (Gr. 105), uno

Anchored Retaining Wall:

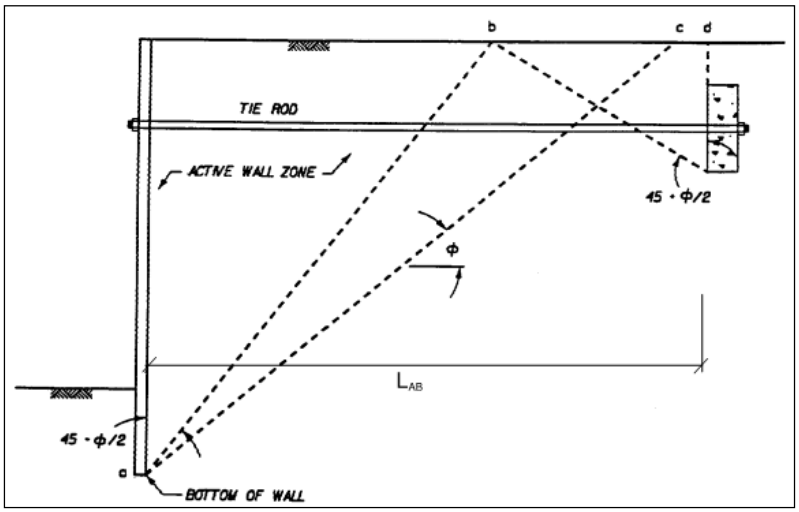

Figure 1: Wall Active and Passive Soil Zones

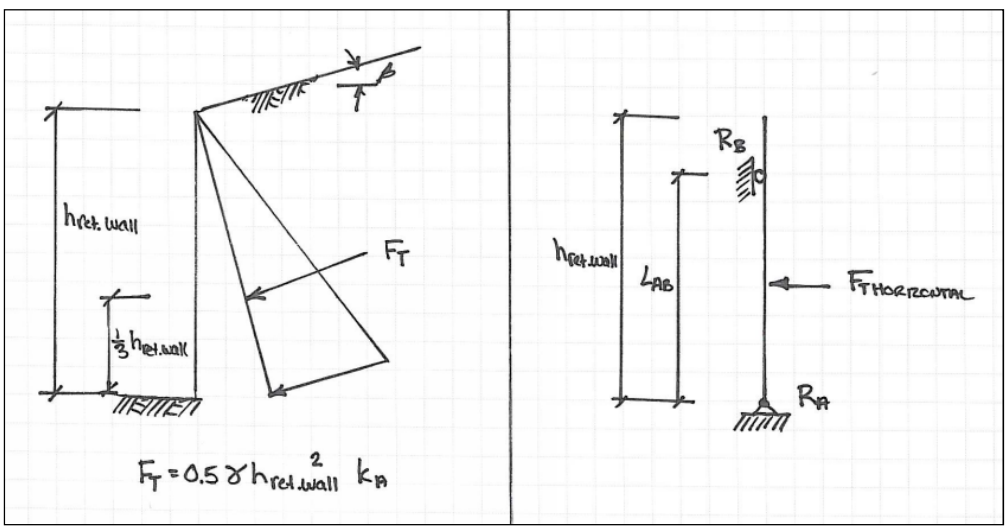

Figure 2: Soil Pressure Distribution (surcharge not shown)

$45+\varphi/2 = 63°$, $45-\varphi/2 = 27°$

Wingwall #1:
$h_{ret.wall}$ = Average height of wing wall = 8.8ft
L = wingwall length parallel to face of wall = 9ft

$F_T = 0.5*\gamma*h_{ret.wall}^2* K_A = 0.5(140pcf)(8.8ft)^2(0.26) = 1{,}410plf$
$F_{surcharge} = K_A* \gamma*h_{eq}*h_{ret.wall} = (0.26)(140pcf)(2ft)(8.8ft) = 641plf$ (AASHTO 3.11.6.4)
$F_{Thorizontal} = (F_T)\cos\beta = (1{,}410plf)(\cos 0°) = 1{,}410plf$
$F_{Tvertical} = (F_T)\sin\beta = (1{,}410plf)(\sin 0°) = 0plf$

R_B (factored) = 1812 plf [From Computer Output – See Appendix A]
R_A (factored) = 2094 plf [From Computer Output – See Appendix A]
R_B (un-factored service) = 1248 plf [From Computer Output – See Appendix A]
R_A (un-factored service) = 1435 plf [From Computer Output – See Appendix A]

Load on Anchor = R_B (factored) * L = 1812plf(9ft) = 16,310lb

Mwall (factored, strength) = 2.5 k-ft/ft [From Computer Output – See Appendix A]
Vwall (factored, strength) = 2.1 k/ft [From Computer Output – See Appendix A]
Mwall (un-factored, service) = 1.7 k-ft/ft [From Computer Output – See Appendix A]
Vwall (un-factored, service) = 1.5 k/ft [From Computer Output – See Appendix A]

Wingwall #2:
$h_{ret.wall}$ = Average height of wing wall = 8.7ft
L = wingwall length parallel to face of wall = 11.25ft

$F_T = 0.5*\gamma*h_{ret.wall}^2* K_A = 0.5(140pcf)(8.7ft)^2(0.26) = 1{,}378plf$
$F_{surcharge} = K_A* \gamma*h_{eq}*h_{ret.wall}$ = (0.26)(140pcf)(2ft)(8.7ft) = 634plf (AASHTO 3.11.6.4)
$F_{Thorizontal} = (F_T)\cos\beta = (1{,}378plf)(\cos 0°) = 1{,}378plf$
$F_{Tvertical} = (F_T)\sin\beta = (1{,}378plf)(\sin 0°) = 0plf$

R_B (factored) = 1800 plf [From Computer Output – See Appendix A]
R_A (factored) = 2094 plf [From Computer Output – See Appendix A]
R_B (un-factored service) = 1239 plf [From Computer Output – See Appendix A]
R_A (un-factored service) = 1435 plf [From Computer Output – See Appendix A]

Load on Anchor = R_B (factored) * L = 1800plf(11.25ft) = 20,250lb

Mwall (factored, strength) = 2.5 k-ft/ft [From Computer Output – See Appendix A]
Vwall (factored, strength) = 2.1 k/ft [From Computer Output – See Appendix A]
Mwall (un-factored, service) = 1.7 k-ft/ft [From Computer Output – See Appendix A]
Vwall (un-factored, service) = 1.5 k/ft [From Computer Output – See Appendix A]

Wingwall #3:
$h_{ret.wall}$ = Average height of wing wall = 8.6ft
L = wingwall length parallel to face of wall = 6ft

$F_T = 0.5*\gamma*h_{ret.wall}^2* K_A = 0.5(140pcf)(8.6ft)^2(0.26) = 1{,}346plf$
$F_{surcharge} = K_A* \gamma*h_{eq}*h_{ret.wall}$ = (0.26)(140pcf)(2ft)(8.6ft) = 626plf (AASHTO 3.11.6.4)
$F_{Thorizontal} = (F_T)\cos\beta = (1{,}346plf)(\cos 0°) = 1{,}346plf$
$F_{Tvertical} = (F_T)\sin\beta = (1{,}346plf)(\sin 0°) = 0plf$

R_B (factored) = 1788 plf [From Computer Output – See Appendix A]
R_A (factored) = 2094 plf [From Computer Output – See Appendix A]
R_B (un-factored service) = 1230 plf [From Computer Output – See Appendix A]
R_A (un-factored service) = 1435 plf [From Computer Output – See Appendix A]

Load on Anchor = R_B (factored) * L = 1788plf(6ft) = 10,728lb

Mwall (factored, strength) = 2.5 k-ft/ft [From Computer Output – See Appendix A]
Vwall (factored, strength) = 2.1 k/ft [From Computer Output – See Appendix A]

Mwall (un-factored, service) = 1.7 k-ft/ft [From Computer Output – See Appendix A]
Vwall (un-factored, service) = 1.5 k/ft [From Computer Output – See Appendix A]

Wingwall #4:
$h_{ret.wall}$ = Average height of wing wall = 9ft
L = wingwall length parallel to face of wall = 8ft

$F_T = 0.5*\gamma*h_{ret.wall}^2* K_A = 0.5(140pcf)(9ft)^2(0.26) = 1{,}475plf$
$F_{surcharge} = K_A* \gamma*h_{eq}*h_{ret.wall} = (0.26)(140pcf)(2ft)(9ft) = 655plf$ (AASHTO 3.11.6.4)
$F_{Thorizontal} = (F_T)\cos\beta = (1{,}4756plf)(\cos 0°) = 1{,}475plf$
$F_{Tvertical} = (F_T)\sin\beta = (1{,}475plf)(\sin 0°) = 0plf$

R_B (factored) = 1836 plf [From Computer Output – See Appendix A]
R_A (factored) = 2094 plf [From Computer Output – See Appendix A]
R_B (un-factored service) = 1266 plf [From Computer Output – See Appendix A]
R_A (un-factored service) = 1435 plf [From Computer Output – See Appendix A]

Load on Anchor = R_B (factored) * L = 1836plf(8ft) = 14,688lb

Mwall (factored, strength) = 2.5 k-ft/ft [From Computer Output – See Appendix A]
Vwall (factored, strength) = 2.1 k/ft [From Computer Output – See Appendix A]
Mwall (un-factored, service) = 1.7 k-ft/ft [From Computer Output – See Appendix A]
Vwall (un-factored, service) = 1.5 k/ft [From Computer Output – See Appendix A]

Flexural Design

M_u (factored, strength) = 2.5 k-ft/ft
M_u (un-factored, service) = 1.7 k-ft/ft

<u>Minimum Flexural (AASHTO 5.7.3.3.2) -</u>

$1.33M_u$
$1.33(M_u) = 1.33(2.5k\text{-}ft/ft) = 3.3$ k-ft/ft

-or-

$1.2M_{cr}$
$I_g = bd^3/12 = (12in)(12in)^3/12 = 1728\ in^4$
$S_g = bd^2/6 = (12in)(12in)^2/6 = 288\ in^3$
$F_r = 0.37\sqrt{f'_c} = 0.37(\sqrt{6ksi}) = 0.906ksi$
$M_{cr} = S_g(f_r) = 288in^3(0.906ksi) = 260.93$ k-in = **21.74 k-ft - controls**

Try #6 at 10in
$A_s = 0.528in^2$
$T=C = A_s*f_y = (0.528in^2)(60ksi) = 31.7k$
$a = A_s*f_y/(.85)(f'_c)(b) = (0.528in^2)(60ksi)/(0.85)(6ksi)(12in) = 0.52in$
$M_r = \varphi M_n$
$\varphi = 0.90$
$M_r = \varphi\ A_s*f_y(d-a/2) = (0.9)(0.528\ in^2)(60ksi)(9.625in-(0.52in/2)) =$ **<u>22.3k-ft/ft > 21.74k-ft/ft - OK</u>**

Crack Control (AASHTO 5.7.3.4) -

$\gamma_e = 0.75$ (Class 2)
$f_{ss} = [M_u/(d-(a/2)]/A_s = [1.7k\text{-}ft/ft(12in/ft)/(9.625in-(0.52in/2))]/0.528in2 = 4.13$ ksi
$\beta = 1 + d_c/(0.7(h - d_c) = 1 + 2.375in/(0.7(12in-2.375in)) = 1.353$
$d_c = 2.375in$
$h = 12in$
$S \leq (700*\gamma_e)/(\beta*f_{ss}) - 2d_c = (700*0.75)/(1.353*4.13ksi) - (2)(2.375in) =$ **89in >> 10" - OK**

Temperature and Shrinkage (AASHTO 5.10.8) -

$A_{sT\&S} = 1.30(b)(h)/(2)(b+h)f_y = 1.30(12in)(12in)/(2)(12in+12in)(60ksi) = 0.065\ in^2$
$0.11 > A_{sT\&S} > 0.6$ - $0.11in^2$ controls
Provide min of #4 bar at 18"oc A_s =0.133in^2/ft

Shear Design

$V_n = \varphi(V_c)$
$\varphi = 0.9$
$V_c = 0.0316(\beta)(\sqrt{f'_c})(b_v)(d_v) = 0.0316(2)(2.45ksi)(12in)(9.625in) = 17.9$ k/ft
$V_n = 0.9*17.9$ k/ft = **<u>17.9 k/ft >> 2.1k/ft - OK</u>**

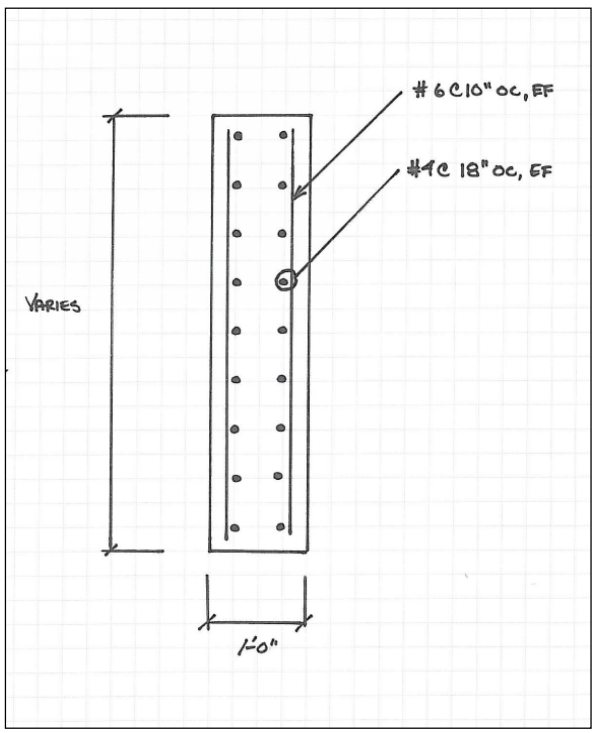

Figure 3: Wing Wall Reinforcement

Dead Man Anchors :

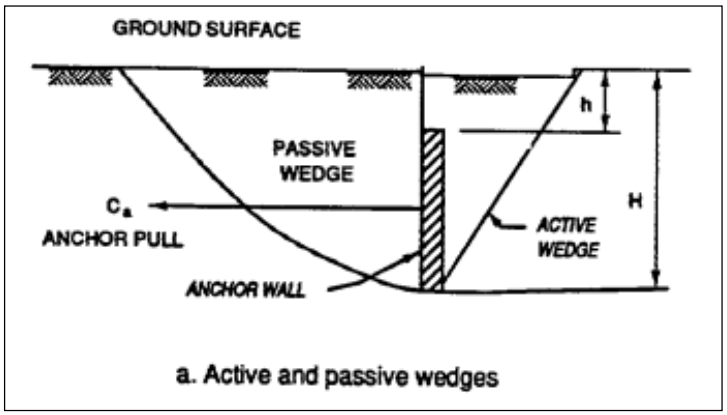

Figure 4: Anchor Passive and Active Soil Zones

Dead Man 1:

Try 3'x2'x11' (height x width x length)

H=8.8ft (average top of wall) – 7.3ft (top of anchor) + 3ft (depth of anchor) = 4.5ft
$P_P = \gamma*H^2*K_P/2$ = (140pcf)(4.5ft)^2(3.852)/2 = 5460 plf
$P_A = \gamma*H^2*K_A/2$ = (140pcf)(4.5ft)^2(0.26)/2 = 370 plf
W = Wsoil + Wanchor = (1.5ft)(2ft)(140pcf)+(2ft)(3ft)(150pcf) = 1320 plf
$C_a = L(P_P - P_A) + 0.333K_0\,\gamma\,(\mathrm{sqrt}(K_P)+\mathrm{sqrt}(K_A))H^3\tan\varphi + W\tan\varphi$ =
= 11ft(5460plf – 370plf) + 0.333(0.412)(140pcf)(3.852^0.5+0.26^0.5)(4.5ft)^3(0.727) + (11ft)(1320plf)(0.727)
= 55,990# + 3,146# + 10,556# = **69,692# >>> 16,310#**

Try 2'x1'x8' (height x width x length)

H=8.8ft (average top of wall) – 6.8ft (top of anchor) + 2ft (height of anchor) = 4.0ft
$P_P = \gamma*H^2*K_P/2$ = (140pcf)(4.0ft)^2(3.852)/2 = 4314 plf
$P_A = \gamma*H^2*K_A/2$ = (140pcf)(4.0ft)^2(0.26)/2 = 291 plf
W = Wsoil + Wanchor = (2ft)(1ft)(140pcf)+(1ft)(2ft)(150pcf) = 580 plf
$C_a = L(P_P - P_A) + 0.333K_0\,\gamma\,(\mathrm{sqrt}(K_P)+\mathrm{sqrt}(K_A))H^3\tan\varphi + W\tan\varphi$ =
= 8ft(4314plf – 291plf) + 0.333(0.412)(140pcf)(3.852^0.5+0.26^0.5)(4.0ft)^3(0.727) + (8ft)(580plf)(0.727)
= 32,184# + 2210# + 3373# = **37,767# > 16,310# OK**

$L_{AB} = H_{wall}[\tan(45-\varphi/2)]+H[\tan(45+\varphi/2)]$ = 8.8ft(tan27) + 4.0ft(tan63) = **12.3ft <14ft OK**

Use 2'x1'x8' anchor (height x width x length)

Dead Man 2:

Try 2'x1'x8' (height x width x length)

H= 8.7ft (average top of wall) – 6.8ft (top of anchor) + 2ft (height of anchor) = 3.9ft

$P_P = \gamma*H^2*K_P/2 = (140pcf)(3.9ft)^2(3.852)/2 = 4101plf$
$P_A = \gamma*H^2*K_A/2 = (140pcf)(3.9ft)^2(0.26)/2 = 277$ plf
W = Wsoil + Wanchor = (2ft)(1ft)(140pcf)+(1ft)(2ft)(150pcf) = 580 plf
$C_a = L(P_P - P_A) + 0.333K_0\,\gamma\,(sqrt(K_P)+sqrt(K_A))H^3\tan\varphi + W\tan\varphi =$
$= 8ft(4101plf - 277plf) + 0.333(0.412)(140pcf)(3.852^{0.5}+0.26^{0.5})(3.9ft)^3(0.727) + (8ft)(580plf)(0.727)$
= 30,592# + 2048# + 3373# = **<u>36,013# > 20,250# OK</u>**

$L_{AB} = H_{wall}[\tan(45-\varphi/2)]+H[\tan(45+\varphi/2)] = 8.7ft(\tan27) + 3.9ft(\tan63) =$ **<u>12.1ft <14ft OK</u>**

<u>Use 2'x1'x8' anchor</u> (height x width x length)

Dead Man 3:

Try 2'x1'x6' (height x width x length)

H= 8.6ft (average top of wall) – 6.8ft (top of anchor) + 2ft (height of anchor) = 3.8ft
$P_P = \gamma*H^2*K_P/2 = (140pcf)(3.8ft)^2(3.852)/2 = 3893plf$
$P_A = \gamma*H^2*K_A/2 = (140pcf)(3.8ft)^2(0.26)/2 = 263$ plf
W = Wsoil + Wanchor = (2ft)(1ft)(140pcf)+(1ft)(2ft)(150pcf) = 580 plf
$C_a = L(P_P - P_A) + 0.333K_0\,\gamma\,(sqrt(K_P)+sqrt(K_A))H^3\tan\varphi + W\tan\varphi =$
$= 6ft(3893plf - 263plf) + 0.333(0.412)(140pcf)(3.852^{0.5}+0.26^{0.5})(3.8ft)^3(0.727) + (6ft)(580plf)(0.727)$
= 21,780# + 1894# + 2530# = **<u>26,204# > 10,728# OK</u>**

$L_{AB} = H_{wall}[\tan(45-\varphi/2)]+H[\tan(45+\varphi/2)] = 8.6ft(\tan27) + 3.8ft(\tan63) =$ **<u>11.9ft <14ft OK</u>**

<u>Use 2'x1'x6' anchor</u> (height x width x length)

Dead Man 4:

Try 2'x1'x6' (height x width x length)

H= 9ft (average top of wall) – 6.8ft (top of anchor) + 2ft (height of anchor) = 4.2ft
$P_P = \gamma*H^2*K_P/2 = (140pcf)(4.2ft)^2(3.852)/2 = 4756plf$
$P_A = \gamma*H^2*K_A/2 = (140pcf)(4.2ft)^2(0.26)/2 = 321plf$
W = Wsoil + Wanchor = (2ft)(1ft)(140pcf)+(1ft)(2ft)(150pcf) = 580 plf
$C_a = L(P_P - P_A) + 0.333K_0\,\gamma\,(sqrt(K_P)+sqrt(K_A))H^3\tan\varphi + W\tan\varphi =$
$= 6ft(4756plf - 321plf) + 0.333(0.412)(140pcf)(3.852^{0.5}+0.26^{0.5})(4.2ft)^3(0.727) + (6ft)(580plf)(0.727)$
= 26,610# + 2558# + 2530# = **<u>31,698# > 14,688# OK</u>**

$L_{AB} = H_{wall}[\tan(45-\varphi/2)]+H[\tan(45+\varphi/2)] = 9ft(\tan27) + 4.2ft(\tan63) =$ **<u>12.8ft <14ft OK</u>**

<u>Use 2'x1'x6' anchor</u> (height x width x length)

Tie Rod Design:

Design for Wingwall 2 (controls) – Pu=20,250#/wall

With 2 ties per wall Pu = 20.25k/2 = 10.2k/rod

Bolt Capacity: Use ASTM F1554 (grade 105) threaded rod (F_{nt} =0.75*F_u = 0.75(125ksi) = 94ksi)
$\varphi R_n = F_{nt}A_b$ = (0.75)(94ksi)(.44in^2) = 31.0k >> 10.2k – OK

Check Plate:

Moment in plate = 10.2k(1.5in)/2 = 7.7k-in

Try a 50ksi 3/4"x6" Galv. Plate

(Yield) $\varphi R_n = \varphi F_y Z$ = (0.9)(50ksi)(0.75in)^2 (6in-0.75in)/4 = **<u>33.2k-in > 7.7k-in - OK</u>**

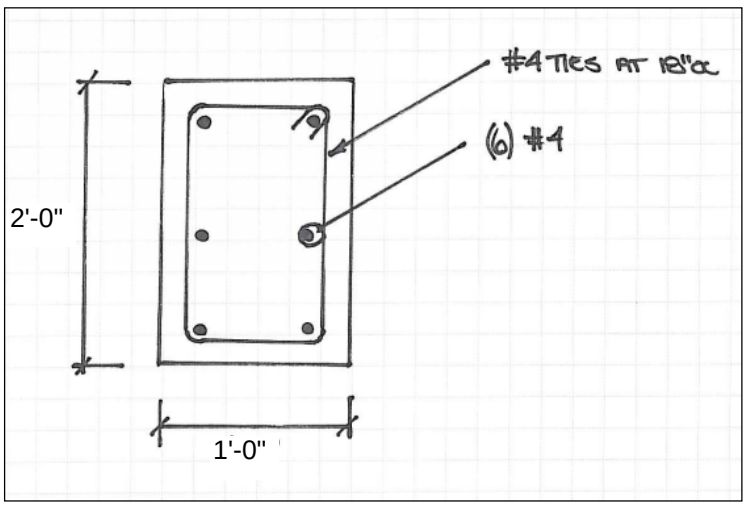

Figure 5: Dead Man Anchor Reinforcement

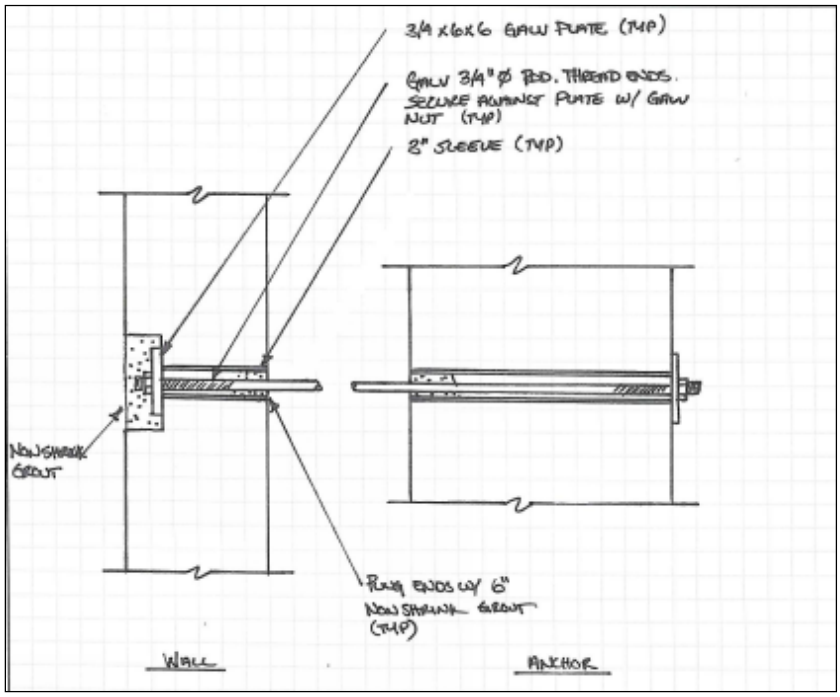

Figure 6: Wall and Dead Man Anchor Attachment Detail

Wing Wall Foundation:

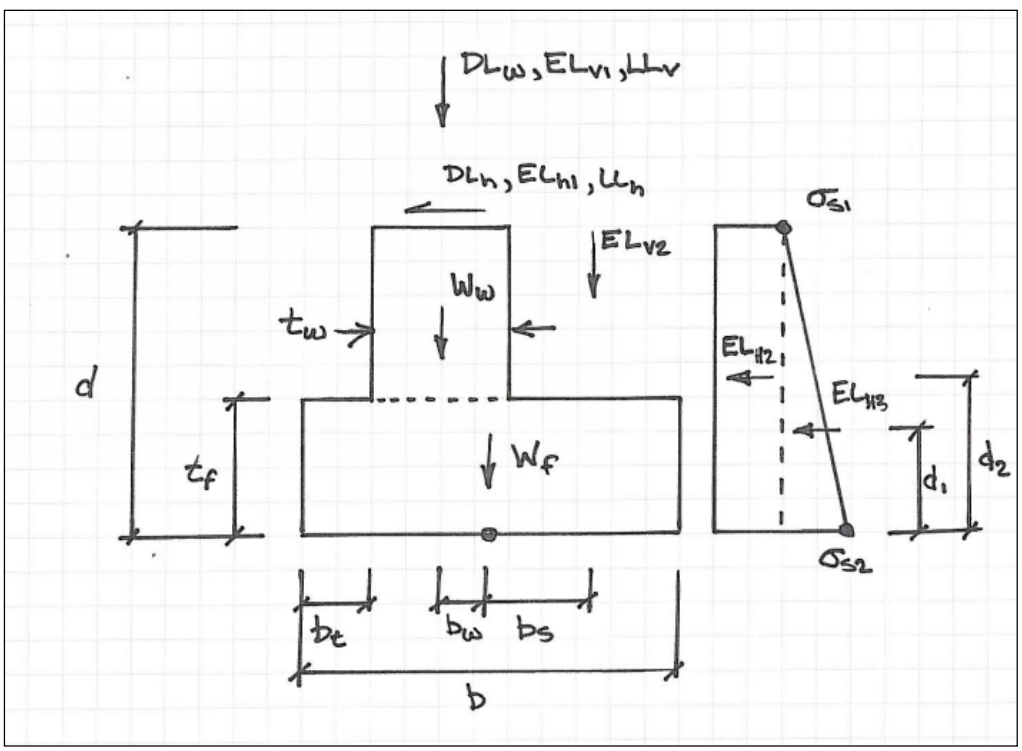

Figure 7: Foundation Force Diagram

Try b = 6ft
b_t = 1.0ft
t_w = 2ft
d = 7.7ft
t_f = 2ft
bs = b/2 - 0.5(b-b_t-t_w) = (6ft/2) – 0.5(6ft-1.0ft-2ft) = 1.5ft
b_w = b/2 – (b_t + 0.5t_w) = 6ft/2 – (1ft + 0.5(2ft)) = 1.0ft
d1 = d/2 = (7.7ft/2) = 3.9ft
d2 = d/3 = (7.7ft/3) = 2.6ft

Loads – Calculations based on foundation for wingwalls 4 which controls:

σ_{s1} = (Depth+Surcharge)*K_A*γ = (9ft+2ft)(0.26)(140pcf) = 400psf
σ_{s2} = (Depth+Surcharge)*K_A*γ = (9ft+2ft+7.7ft)(0.26)(140pcf) = 681psf

DL_w = Supported Wall Dead Load = (1ft)(9ft)(150pcf) = 1350#/ft (unfactored), 1215#/ft (min), 1688#/ft (max)
EL_{v1} = Vertical Earth Load 1 (See $F_{Tvertical}$ for wingwall 4) = 0#/ft (unfactored/min), 0#/ft (max)
W_w = Foundation Wall Dead Load = (2ft)(5.7ft)(150pcf) = 1710#/ft (unfactored), 1539#/ft (min), 2138#/ft (max)
W_f = Foundation Footing Dead Load = (6ft)(2ft)(150pcf) = 1800#/ft (unfactored), 1620#/ft (min), 2250#/ft (max)
EL_{H1} = Horizontal Earth Load 1 (See R_A for wingwall 4) = 2094#/ft (unfactored/min), 2827#/ft (max)
EL_{v2} = Vertical Earth Load 2 = (16.7ft)(3ft)(140pcf) = 7014#/ft (unfactored/min), 9469#/ft (max)
EL_{H2} = Horizontal Earth Load 2 = (σ_{s1})(d) = (400psf)(7.7ft) = 3080#/ft (unfactored/min), 4158#/ft (max)
EL_{H3} = Horizontal Earth Load 3 = (σ_{s2}-σ_{s1})(d/2) = (681psf-400psf)(7.7ft/2) = 1082#/ft (unfactored/min), 1461#/ft (max)

<u>Overturning (AASHTO 11.6.3.3):</u>

e=[(DL_w*b_w)+(EL_{v1}*b_w)+(W_w*b_w)+(EL_{H1}*d)-(EL_{v2}*b_s)+(EL_{H2}*d_1)+(EL_{H3}*d_2)]/[DL_w+EL_{v1}+W_w+W_f+EL_{v2}]
= [(1688#+0#+2138#)*1.0ft + (2827*7.7ft) -(7014#*1.5ft)+(4158*3.9ft)+(1461#*2.6ft)]
/[1688#+0#+2138#+1620#+7014#] =2.8 ft

e_{all} = b/(2*2) = 6ft/4 = **<u>1.5ft <2.8ft – NG</u>**

Try b = 8ft, b_t = 3ft
t_w = 2ft
d = 7.7ft
t_f = 2ft
bs = b/2 - 0.5(b-b_t-t_w) = (8ft/2) – 0.5(8ft-3ft-2ft) = 2.5ft
b_w = b/2 – (b_t + 0.5t_w) = 8ft/2 – (3ft + 0.5(2ft)) = 0ft
d1 = d/2 = (7.7ft/2) = 3.9ft
d2 = d/3 = (7.7ft/3) = 2.6ft

Loads – Calculations based on foundation for wingwalls 4 which controls:

σ_{s1} = (Depth+Surcharge)*K_A*γ = (9ft+2ft)(0.26)(140pcf) = 400psf
σ_{s2} = (Depth+Surcharge)*K_A*γ = (9ft+2ft+7.7ft)(0.26)(140pcf) = 681psf

DL_w = Supported Wall Dead Load = (1ft)(9ft)(150pcf) = 1350#/ft (unfactored), 1215#/ft (min), 1688#/ft (max)
EL_{v1} = Vertical Earth Load 1 (See $F_{Tvertical}$ for wingwall 4) = 0#/ft (unfactored/min), 0#/ft (max)
W_w = Foundation Wall Dead Load = (2ft)(5.7ft)(150pcf) = 1710#/ft (unfactored), 1539#/ft (min), 2138#/ft (max)
W_f = Foundation Footing Dead Load = (8ft)(2ft)(150pcf) = 2400#/ft (unfactored), 2160#/ft (min), 3000#/ft (max)
EL_{H1} = Horizontal Earth Load 1 (See R_A for wingwall 4) = 2094#/ft (unfactored/min), 2827#/ft (max)
EL_{v2} = Vertical Earth Load 2 = (16.7ft)(3ft)(140pcf) = 7014#/ft (unfactored/min), 9469#/ft (max)
EL_{H2} = Horizontal Earth Load 2 = $(\sigma_{s1})(d)$ = (400psf)(7.7ft) = 3080#/ft (unfactored/min), 4158#/ft (max)
EL_{H3} = Horizontal Earth Load 3 = $(\sigma_{s2}-\sigma_{s1})(d/2)$ = (681psf-400psf)(7.7ft/2) = 1082#/ft (unfactored/min), 1461#/ft (max)

<u>Overturning (AASHTO 11.6.3.3):</u>

$e=[(DL_w*b_w)+(EL_{v1}*b_w)+(W_w*b_w)+(EL_{H1}*d)-(EL_{v2}*b_s)+(EL_{H2}*d_1)+(EL_{H3}*d_2)]/[DL_w+EL_{v1}+W_w+W_f+EL_{v2}]$
= [(1688#+0#+2138#)*0ft + (2827*7.7ft) -(7014#*2.5ft)+(4158*3.9ft)+(1461#*2.6ft)]
/[1688#+0#+2138#+2160#+7014#] =2.7 ft

e_{all} = b/4 = 8ft/4 = **<u>2ft >1.9ft – OK (</u>Resultant in middle ½)**

<u>Bearing (AASHTO 11.6.3.2):</u>

$\sigma_R = \varphi\sigma_n$ = (0.45)(10,000psf) = 4,500psf
$\sigma_v = \Sigma V/(B-2e)$ = (1688#/ft+0#/ft+2138#/ft+3000#/ft+9469#/ft)/(8ft-2(1.9ft))= 3880 (factored), 2970 (un-factored)
= **<u>3880psf < 4500psf - OK</u>**

<u>Sliding (AASHTO 10.6.3.4):</u>

Sliding Force = $EL_{H1} + EL_{H2} + EL_{H3}$ = 2827#/ft + 4158#/ft +1461#/ft = 8446#/ft
R_τ =V*tan(0.8φ) = (1215#+0#+1539#+2160#+7014#)*tan(.8(36)) = 6557#/ft
$R_R = \varphi R_n = \varphi_\tau R_\tau$ = 0.8(6557#/ft) = 5246#/ft

Remaining sliding force = 8446#/ft – 5246#/ft = 3200 #/ft Therefore fasten wing wall footing to rigid frame footing to achieve additional 3.2k/ft capacity.

Chord force in footing: P = $[3.2k/ft(12ft)^2/2]/(7ft)$ = 32.9k (connection 1ft from footing edge, 12' long ftg)

Bolt Capacity: Use 1in dia ASTM F1554 (grade 105) threaded rod (F_{nt} =94ksi)
$\varphi R_n = F_{nt}A_b$ = (0.75)(94ksi)(.79in^2) = 55.7k – OK

Flexural Design

Wall:

$M_u = (EL_{H1}+EL_{H2}+EL_{H3})(d-t_f)$ = (2827#/ft+4158#/ft+1461#/ft)(7.7ft-2ft) = 48k-ft/ft (factored), 35.7 (un-factored)
$V_u = (EL_{H1}+EL_{H2}+EL_{H3})$ = (2827#/ft+4158#/ft+1461#/ft) = 8.5k/ft

Minimum Flexural (AASHTO 5.7.3.3.2) -

$1.33M_u$
$1.33(M_u)$ = 1.33(48 k-ft/ft) = **64 k-ft/ft - Controls**

-or-

$1.2M_{cr}$
$I_g = bd^3/12 = (12in)(24in)^3/12 = 13824\ in^4$
$S_g = bd^2/6 = (12in)(24in)^2/6 = 1152\ in^3$
$F_r = 0.37\sqrt{f'_c} = 0.37(\sqrt{6ksi}) = 0.906ksi$
$M_{cr} = S_g(f_r) = 1152in^3(0.906ksi) = 1044$ k-in = 87 k-ft

Try #6 at 8in
$A_s = 0.465\ in^2$
$T=C = A_s*f_y = (0.66in^2)(60ksi) = 39.6k$
$a = A_s*f_y/(.85)(f'_c)(b) = (0.66in^2)(60ksi)/(0.85)(6ksi)(12in) = 0.65in$
$M_r = \varphi M_n$
$\varphi = 0.90$
$M_r = \varphi A_s*f_y(d-a/2) = (0.90)(0.66in^2)(60ksi)(21.7in-(0.65in/2))/12$ = **64k-ft/ft = 64 k-ft/ft - OK**

Crack Control (AASHTO 5.7.3.4) -

$\gamma_e = 0.75$ (Class 2)
$f_{ss} = [M_u/(d-(a/2)]/A_s = [35.7k\text{-}ft/ft(12in/ft)/(21.7in-(0.65in/2))]/0.66in2 = 30.4$ ksi
$\beta = 1 + d_c/(0.7(h - d_c) = 1 + 2.3in/(0.7(24in-2.3in)) = 1.15$
$d_c = 2.3in$
$h = 24in$
$S \leq (700*\gamma_e)/(\beta*f_{ss}) - 2d_c = (700*0.75)/(1.15*30.4ksi) - (2)(2.3in)$ **10.4in > 8" – OK**

Use #6 at 8in

Temperature and Shrinkage (AASHTO 5.10.8) -

$A_{sT\&S} = 1.30(b)(h)/(2)(b+h)f_y = 1.30(12in)(24in)/(2)(12in+24in)(60ksi) = 0.087\ in^2$
$0.11 > A_{sT\&S} > 0.6$ - $0.11in^2$ controls
Provide min of #4 bar at 18"oc A_s =0.133in²/ft

Shear

$V_n=\varphi(V_c)$
$\varphi = 0.9$
$V_c = 0.0316(\beta)(\sqrt{f'_c})(b_v)(d_v) = 0.0316(2)(2.45ksi)(12in)(21.7in) = 40.3$ k/ft
$V_n = 0.9*40.3$ k/ft = **36.3 k/ft >> 8.5k/ft - OK**

Footing:

$M_u = (q)(b-b_t-t_w)^2/2 = 3880psf(8ft-3ft-2ft)^2/2 = 17.5$ k/ft (factored), 13.4 (un-factored)
$V_u = (q)(b-b_t-t_w) = 3880psf(8ft-3ft-2ft) = 11.7$ k/ft

Minimum Flexural (AASHTO 5.7.3.3.2) -

$1.33M_u$
$1.33(M_u) = 1.33(17.5k\text{-}ft/ft) =$ **23.3 k-ft/ft - Controls**

-or-

$1.2M_{cr}$
$I_g = bd^3/12 = (12in)(24in)^3/12 = 13824\ in^4$
$S_g = bd^2/6 = (12in)(24in)^2/6 = 1152\ in^3$
$F_r = 0.37\sqrt{f'_c} = 0.37(\sqrt{6ksi}) = 0.906ksi$
$M_{cr} = S_g(f_r) = 1152in^3(0.906ksi) = 1044$ k-in = 87 k-ft

Try #5 at 12in
$A_s = 0.31\ in^2$
$T=C = A_s*f_y = (0.31in^2)(60ksi) = 18.6k$
$a = A_s*f_y/(.85)(f'_c)(b) = (0.31in^2)(60ksi)/(0.85)(6ksi)(12in) = 0.304in$
$M_r = \varphi M_n$
$\varphi = 0.90$
$M_r = \varphi A_s*f_y(d-a/2) = (0.90)(0.31in^2)(60ksi)(21.7in-(0.304in/2))/12 =$ **30k-ft/ft > 23.3k-ft/ft - OK**

Crack Control (AASHTO 5.7.3.4) -

$\gamma_e = 0.75$ (Class 2)
$f_{ss} = [M_u/(d-(a/2)]/A_s = [13.4k\text{-}ft/ft(12in/ft)/(21.7in-(0.304in/2))]/0.31in2 = 24.1$ ksi
$\beta = 1 + d_c/(0.7(h - d_c) = 1 + 2.3in/(0.7(24in-2.3in)) = 1.15$
$d_c = 2.3in$
$h = 24in$
$S \leq (700*\gamma_e)/(\beta*f_{ss}) - 2d_c = (700*0.75)/(1.15*24.1ksi) - (2)(2.3in) =$**14.3 in > 12" – OK**

Use #5 at 12

Temperature and Shrinkage (AASHTO 5.10.8) -

$A_{sT\&S} = 1.30(b)(h)/(2)(b+h)f_y = 1.30(12in)(24in)/(2)(12in+24in)(60ksi) = 0.087\ in^2$
$0.11 > A_{sT\&S} > 0.6$ - $0.11in^2$ controls
Provide min of #4 bar at 18"oc $A_s = 0.133in^2/ft$

Shear

$V_n=\varphi(V_c)$
$\varphi = 0.9$
$V_c = 0.0316(\beta)(\sqrt{f'_c})(b_v)(d_v) = 0.0316(2)(2.45ksi)(12in)(21.7in) = 40.3$ k/ft
$V_n = 0.9*40.3$ k/ft = **36.3 k/ft >> 11.7k/ft - OK**

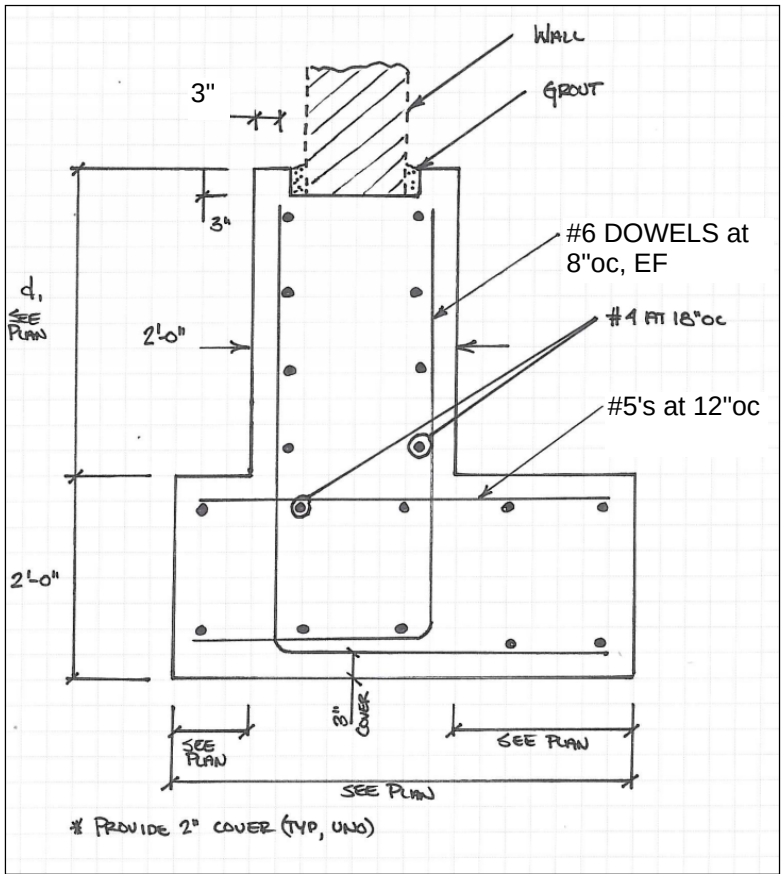

Figure 8: Wing Wall Foundation Reinforcement

Rigid Frame

Loads:

Soil Vertical load[1] (assume 1.458' of fill) = (1.458ft)(unit width = 4.2ft)(140pcf) = 0.857 klf

Soil Horizontal Load[1,2] (Without Hydrostatic Pressure):
Minimum = (k_0 = 0.41)(1.458ft)(4.2ft)(140pcf) = 0.351 klf
Maximum = 0.41[(1.458ft + (PC height 8.667')](4.2ft)(140pcf) = 2.441 klf

Soil Horizontal Load[1,2] (With Hydrostatic Pressure – Assumed at Top of Rigid Frame):
Minimum = (k_0 = 0.41)(1.458ft)(4.2ft)(140pcf) = 0.351 klf
Maximum = 0.351 klf + (8.667')(4.2ft)[0.41(140pcf-62.4pcf) + 62.4pcf] = 3.781 klf

Abutment surcharge = (0.41)(4.2ft)(140pcf)(h_{eq}[3] = 3.2ft) = 0.771 klf (AASHTO 3.11.64)

Dead Load = Self Weight

Lane = 4.2ft(0.064ksf) = 0.269k/ft
HL-93 Truck –8k load and two 32k loads 14 ft apart (apply as moving load in RISA)[4]
HL-93 Tandem – (2) 25k loads 4 ft apart (apply as moving load in RISA)[4]

Additional Factors:

Impact Factor, IM[5] = 33(1.0-0.125DE) = (33[1.0-0.125(0.77ft)]) = 1.30 (AASHTO 3.6.2.2)

Multiple Presence Factor, m = 1.2 (AASHTO 3.6.1.1.2)

[1] = Maximum fill height along bridge centerline used for vertical and lateral soil load calculations
[2] = Wall movement to engage active condition is approximated by 0.004H (Foundation Design, Second Ed. Table 23.1 by Coduto). Design assumes at rest conditions.
[3] = Surcharge equivalent fill height based on AASHTO 3.11.6.4. Linear interpolation utilized.
[4] = With 4'-2.25" frame width, AASHTO and 12.14.5.2 and 12.11.2.1 assume half axle load applied to each frame, transverse spacing = 6ft
[5] = Minimum fill height along bridge centerline used to calculate impact factor, IM. Does not apply to lane loads.

Results:

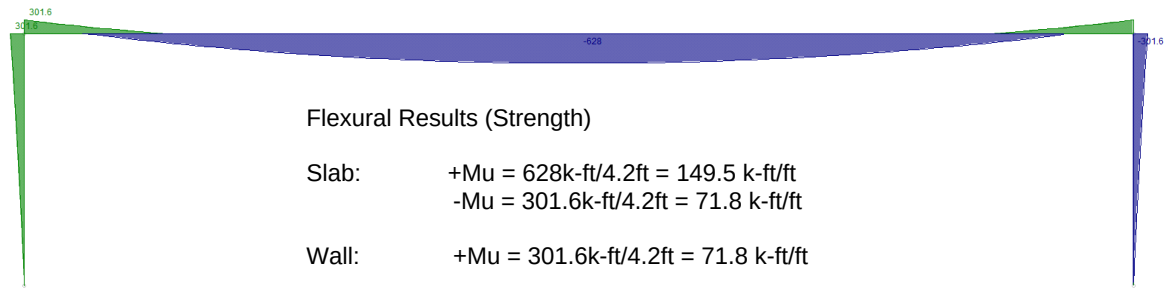

Flexural Results (Strength)

Slab: +Mu = 628k-ft/4.2ft = 149.5 k-ft/ft
-Mu = 301.6k-ft/4.2ft = 71.8 k-ft/ft

Wall: +Mu = 301.6k-ft/4.2ft = 71.8 k-ft/ft

Flexural Results (Service)

Slab: +Mu = 401.3k-ft/4.2ft = 95.5 k-ft/ft
-Mu = 197.7k-ft/4.2ft = 47.1 k-ft/ft

Wall: +Mu = 197.7k-ft/4.2ft = 47.1 k-ft/ft

Figure 9: Rigid Frame Moment Results (See Appendix B For Computer Output)

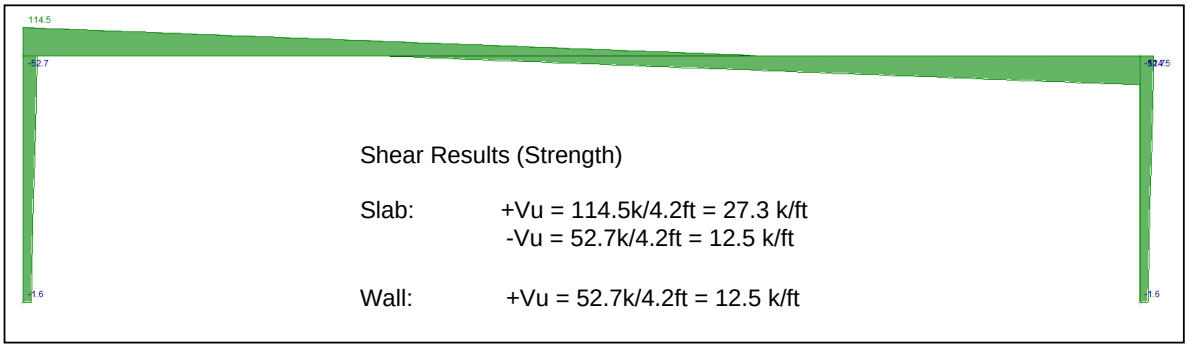

Shear Results (Strength)

Slab: +Vu = 114.5k/4.2ft = 27.3 k/ft
-Vu = 52.7k/4.2ft = 12.5 k/ft

Wall: +Vu = 52.7k/4.2ft = 12.5 k/ft

Figure 10: Rigid Frame Shear Results (See Appendix B For Computer Output)

Flexural Design

Slab: M_u = -149.5 k-ft/ft - Controls

Minimum Flexural (AASHTO 5.7.3.3.2) -

$1.33M_u$
$1.33(M_u) = 1.33(149.7k\text{-}ft/ft) = 199.1$ k-ft/ft

-or-

$1.2M_{cr}$
$I_g = bd^3/12 = (12in)(22in)^3/12 = 10648\ in^4$
$S_g = bd^2/6 = (12in)(22in)^2/6 = 968\ in^3$
$F_r = 0.37\sqrt{f'_c} = 0.37(\sqrt{6ksi}) = 0.906ksi$
$M_{cr} = S_g(f_r) = 968in^3(0.906ksi) = 877.01$ k-in = 73.1 k-ft

Try #8 at 6in

$A_s = 1.58\ in^2$
$T=C = A_s*f_y = (1.58in^2)(60ksi) = 94.8k$
$a = A_s*f_y/(.85)(f'_c)(b) = (1.58in^2)(60ksi)/(0.85)(6ksi)(12in) = 1.55in$
$M_r = \varphi\ M_n$
$\varphi = 0.90$
$M_r = \varphi A_s*f_y(d-a/2) = (0.90)(1.58\ in^2)(60ksi)(19.5in-(1.55in/2))/12 =$ **133.1 k-ft/ft < 149.5 k-ft/ft - NG**

Try #8 at 5in

$A_s = 1.90\ in^2$
$T=C = A_s*f_y = (1.90in^2)(60ksi) = 114.0k$
$a = A_s*f_y/(.85)(f'_c)(b) = (1.90in^2)(60ksi)/(0.85)(6ksi)(12in) = 1.86in$
$M_r = \varphi\ M_n$
$\varphi = 0.90$
$M_r = \varphi A_s*f_y(d-a/2) = (0.90)(1.90\ in^2)(60ksi)(19.5in-(1.86in/2))/12 =$ **158.8 k-ft/ft > 149.5 k-ft/ft - OK**

Crack Control (AASHTO 5.7.3.4) -

$\gamma_e = 0.75$ (Class 2)
$f_{ss} = [M_u/(d-(a/2)]/A_s = [95.5k\text{-}ft/ft(12in/ft)/(19.5in-(1.86in/2))]/1.90in2 = 32.5$ ksi
$\beta = 1 + d_c/(0.7(h - d_c) = 1 + 2.5in/(0.7(22in-2.5in)) = 1.18$
$d_c = 2.5in$
$h = 22in$
$S \leq (700*\gamma_e)/(\beta*f_{ss}) - 2d_c = (700*0.75)/(1.18*32.5ksi) - (2)(2.5in) =$ **8.7 in > 5" - OK**

Therefore use #8 at 5"oc

Temperature and Shrinkage (AASHTO 5.10.8) -

$A_{sT\&S} = 1.30(b)(h)/(2)(b+h)f_y = 1.30(12in)(22in)/(2)(12in+22in)(60ksi) = 0.084\ in^2$
$0.11 > A_{sT\&S} > 0.6$ - $0.11in^2$ controls

Provide min of #4 bar at 18"oc A_s =0.133in^2/ft

Wall: M_u = 71.8 k-ft/ft - controls

Minimum Flexural (AASHTO 5.7.3.3.2) -

$1.33M_u$
$1.33(M_u) = 1.33(71.5k\text{-}ft/ft) = 95.1$ k-ft/ft

-or-

1.2Mcr
$I_g = bd^3/12 = (12in)(12in)^3/12 = 1728\ in^4$
$S_g = bd^2/6 = (12in)(12in)^2/6 = 288\ in^3$
$F_r = 0.37\sqrt{f'_c} = 0.37(\sqrt{6ksi}) = 0.906ksi$
$M_{cr} = S_g(f_r) = 288in^3(0.906ksi) = 260.93$ k-in = 21.74 k-ft

Try #8 at 6in

$A_s = 1.58\ in^2$
$T=C = A_s*f_y = (1.58in^2)(60ksi) = 94.8k$
$a = A_s*f_y/(.85)(f'_c)(b) = (1.58in^2)(60ksi)/(0.85)(6ksi)(12in) = 1.55in$
$M_r = \varphi\ M_n$
$\varphi = 0.90$
$M_r = \varphi A_s*f_y(d-a/2) = (0.90)(1.58\ in^2)(60ksi)(9.5in-(1.55in/2))/12 =$ **62.0 k-ft/ft < 71.8 k-ft/ft - NG**

Try #8 at 5 in

$A_s = 1.90\ in^2$
$T=C = A_s*f_y = (1.90in^2)(60ksi) = 114.0k$
$a = A_s*f_y/(.85)(f'_c)(b) = (1.90in^2)(60ksi)/(0.85)(6ksi)(12in) = 1.86in$
$M_r = \varphi\ M_n$
$\varphi = 0.90$
$M_r = \varphi A_s*f_y(d-a/2) = (0.90)(1.90\ in^2)(60ksi)(9.5in-(1.86in/2))/12 =$ **73.3 k-ft/ft > 71.8 k-ft/ft - OK**

Crack Control (AASHTO 5.7.3.4) -

$\gamma_e = 0.75$ (Class 2)
$f_{ss} = [M_u/(d-(a/2)]/A_s = [47.1k\text{-}ft/ft(12in/ft)/(9.5in-(1.86in/2))]/1.9in2 = 34.7$ ksi
$\beta = 1 + d_c/(0.7(h - d_c) = 1 + 2.5in/(0.7(12in-2.5in)) = 1.38$
$d_c = 2.5in$
$h = 12in$
$S \leq (700*\gamma_e)/(\beta*f_{ss}) - 2d_c = (700*0.75)/(1.38*34.7ksi) - (2)(2.5in) =$ **6.0 in > 5" - OK**

Therefore use #8 at 5"oc – Continue into top slab reinforcement mat. At approximately 5ft -Mu = 0k-ft/ft. Per ACI 12.10 extend h or $12d_b$ beyond - use 2'. Extend bar 7ft.

Temperature and Shrinkage (AASHTO 5.10.8) -
$A_{sT\&S} = 1.30(b)(h)/(2)(b+h)f_y = 1.30(12in)(12in)/(2)(12in+12in)(60ksi) = 0.065\ in^2$
$0.11 > A_{sT\&S} > 0.6$ - $0.11in^2$ controls

Provide min of #4 bar at 18"oc A_s =0.133in^2/ft

Shear Design

Slab: $V_u = 27.3$ k/ft

$V_n=\varphi(V_c)$
$\varphi = 0.9$
$V_c = 0.0316(\beta)(\sqrt{f'_c})(b_v)(d_v) = 0.0316(2)(2.45ksi)(12in)(19.5in) = 36.2$ k/ft
$V_n = 0.9*36.2$ k/ft = **<u>32.6 k/ft > 27.3 k/ft - OK</u>**

Wall: $V_u = 12.5$ k/ft

$V_n=\varphi(V_c)$
$\varphi = 0.9$
$V_c = 0.0316(\beta)(\sqrt{f'_c})(b_v)(d_v) = 0.0316(2)(2.45ksi)(12in)(9.5in) = 17.7$ k/ft
$V_n = 0.9*17.7$ k/ft = **<u>15.9 k/ft >> 12.5 k/ft - OK</u>**

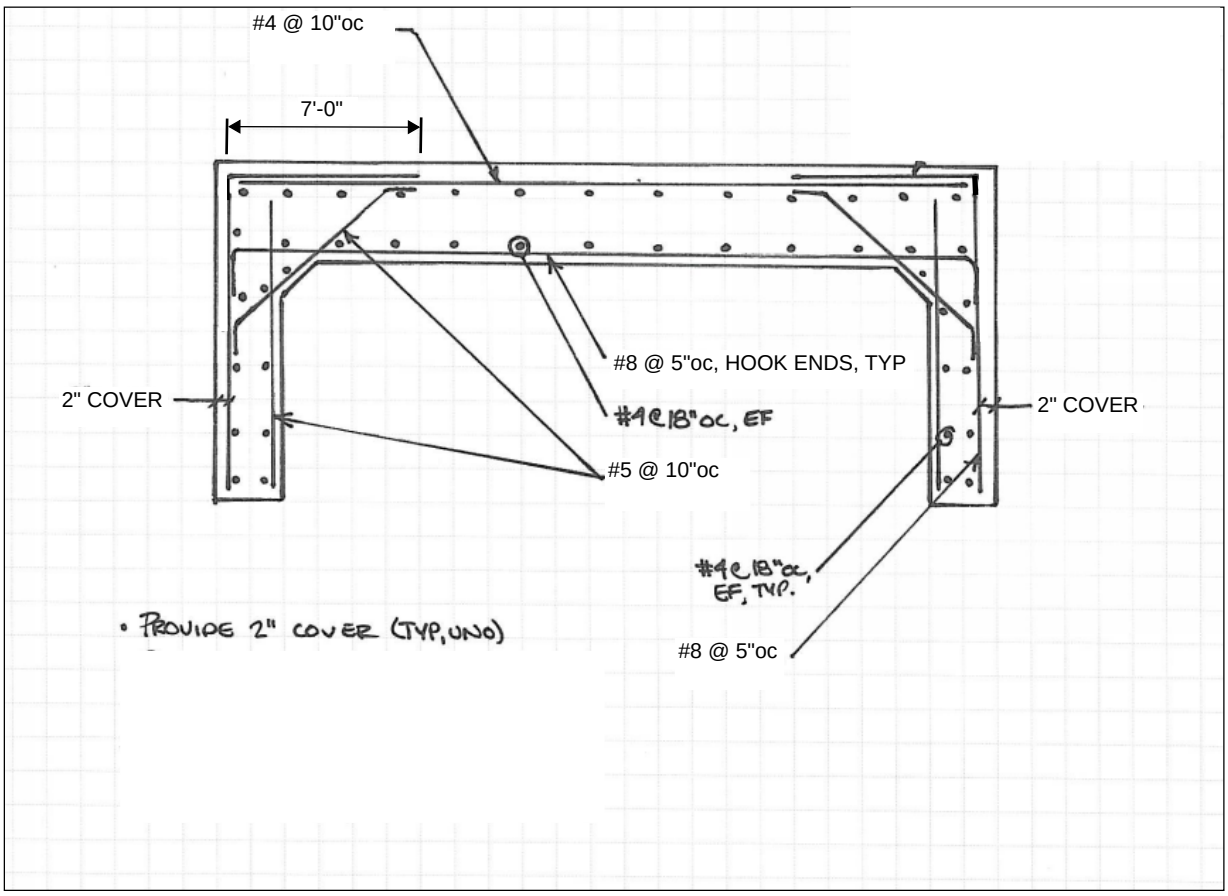

Figure 11: Rigid Frame Reinforcement

Rigid Frame Foundation:

See Wing Wall Foundation for diagram

$B = 9.0$ ft
$b_t = 3.5$ ft
$t_w = 2.0$ ft
$d = 7.5$ ft
$t_f = 2.0$ ft
$b_s = (b_t+t_w)/2 = (3.5ft+2ft)/2 = 2.75$ ft
$b_w = b/2 – (b_t + 0.5t_w) = 9.0ft/2 – (3.5ft + 2.0ft/2) = 0.00$ ft
$d1 = d/2 = (7.5ft/2) = 3.75$ ft
$d2 = d/3 = (7.5ft/3) = 2.5$ ft

Loads:

σ_{s1} = Depth*K_0*γ + surcharge = (8.67ft + 1.46ft)(0.41)(125pcf) + 183.7 = 703 psf
σ_{s2} = Depth*K_0*γ + surcharge = (8.67ft + 1.46ft + 7.5ft)(0.41)(125pcf) + 183.7 = 1087 psf

DL_w = Vertical Frame DL (From Risa) = 5497#/ft (unfactored), 4947#/ft (min), 6871#/ft (max)
DL_h = Horizontal Frame DL (From Risa) = 1635#/ft (unfactored), 1472#/ft (min), 2044#/ft (max)

LL_v = Vertical Frame LL (From Risa) = 6648#/ft (unfactored/min), 11634#/ft (factored)
LL_h = Horizontal Frame LL (From Risa) = 2030#/ft (unfactored/min), 3553#/ft (factored)

EL_{v1} = Vertical Earth Load (From Risa) = 3367#/ft (unfactored/min), 4546#/ft (max)
EL_{H1} = Horizontal Earth Load (From Risa) = 917#/ft (unfactored/min), 1238#/ft (max)

W_w = Found. Wall DL = (2ft)(5.5ft)(150pcf) = 1650#/ft (unfactored), 1485#/ft (min), 2063#/ft (max)
W_f = Found. Footing DL = (9.0ft)(2ft)(150pcf) = 2700#/ft (unfactored), 2430#/ft (min), 3375#/ft (max)

EL_{v2} = Vert. Earth Load = [(17.6ft)(125pcf) + 183.7psf](3.5ft) = 8343#/ft (unfact./min), 11263#/ft (max)
EL_{H2} = Horizontal Earth Load = (σ_{s1})(d) = (703psf)(7.5ft) = 5273#/ft (unfactored/min), 7118#/ft (max)
EL_{H3} = Horizontal Earth Load = (σ_{s1}-σ_{s2})(d/2) = (1087psf-703psf)(7.5ft/2) = 1440#/ft (unfactored/min), 1944#/ft (max)

Overturning (AASHTO 11.6.3.3):

e = [(DL_w+EL_{v1}+LL_v+W_w)*(b_w=0) + (EL_{v2}*b_s) + (DL_h + EL_{H1})(d) + (EL_{H2}*d_1) + (EL_{H3}*d_2)]/[DL_w+EL_{v1}+LL_v+W_w+W_f+EL_{v2}]
= [(-8343#*2.75ft) + (-1472# + 917#)(7.5) + (5273#*3.75ft) + (1440#*2.5ft)]/[4947#+3367#+6648#+1485#+2430#+8343#] = 0.1 ft

e_{all} = b/(2*2) = 9.0ft/4 = **2.3 ft >> 0.1 ft - OK**

Bearing (AASHTO 11.6.3.2):

$\sigma_R = \varphi\sigma_n$ = (0.45)(10ksf) = 4,500 psf
$\sigma_v = \Sigma V/(B-2e)$ = (6871#+4546#+2063#+3375#+11263#+11634#)/(9ft-2(0.1ft)) = **4517 psf ≈ 4500 psf - OK**

Sliding (AASHTO 10.6.3.4):

Sliding Force = $EL_{H1} + EL_{H2} + EL_{H3} + DL_h$ = 1238#/ft + 7118#/ft + 1944#/ft - 1472#/ft = 8828 #/ft
R_τ =V*tan(0.8φ) = (4947#+3367#+1485#+2430#+8343#)*tan29 = 11403#/ft
$R_R = \varphi R_n = \varphi_\tau R_\tau$ = 0.8(11403#/ft) = **9123 #/ft > 8828 #/ft - OK**

Foundation Wall:

$M_u = EL_{H1}(d-t_f) + EL_{H2}(d_1-t_f) + EL_{H3}(d_2-t_f)$ = 1238#/ft(5.5ft) + 7118#/ft(1.75ft) + 1944#/ft(0.5ft) = 20.2 k-ft/ft
$V_u = (EL_{H1}+EL_{H2}+EL_{H3})$ = (1238#/ft+7118#/ft+1944#/ft) = 10.3 k/ft

Minimum Flexural (AASHTO 5.7.3.3.2) -

$1.33M_u$
$1.33(M_u)$ = 1.33(21.4k-ft/ft) = **28.46 k-ft/ft - Controls**

-or-

$1.2M_{cr}$
$I_g = bd^3/12 = (12in)(24in)^3/12 = 13824\ in^4$
$S_g = bd^2/6 = (12in)(24in)^2/6 = 1152\ in^3$
$F_r = 0.37\sqrt{f'_c} = 0.37(\sqrt{6ksi}) = 0.906ksi$
$M_{cr} = S_g(f_r) = 1152in^3(0.906ksi) = 1044$ k-in = 87 k-ft

Try #6 at 10in

$A_s = 0.528\ in^2$
$T=C = A_s*f_y = (0.528in^2)(60ksi) = 31.7k$
$a = A_s*f_y/(.85)(f'_c)(b) = (0.528in^2)(60ksi)/(0.85)(6ksi)(12in) = 0.52in$
$M_r = \varphi M_n$
$\varphi = 0.90$
$M_r = \varphi A_s*f_y(d-a/2) = (0.90)(0.528in^2)(60ksi)(21.625in-(0.52in/2))/12$ = **50.8 k-ft/ft > 28.5 k-ft/ft - OK**

Crack Control (AASHTO 5.7.3.4) -

$\gamma_e = 0.75$ (Class 2)
$f_{ss} = [M_u/(d-(a/2)]/A_s = [28.5k\text{-}ft/ft(12in/ft)/(21.625in-(0.52in/2))]/0.528in2 = 30.3$ ksi
$\beta = 1 + d_c/(0.7(h - d_c) = 1 + 2.375in/(0.7(24in-2.375in)) = 1.16$
$d_c = 2.375in$
$h = 24in$
$S \leq (700*\gamma_e)/(\beta*f_{ss}) - 2d_c = (700*0.75)/(1.16*30.3ksi) - (2)(2.375in)$ = **10.2 in = 10 in – OK**

Use #6 at 10 in oc

Temperature and Shrinkage (AASHTO 5.10.8) -

$A_{sT\&S} = 1.30(b)(h)/(2)(b+h)f_y = 1.30(12in)(24in)/(2)(12in+24in)(60ksi) = 0.087\ in^2$
$0.11 > A_{sT\&S} > 0.6$ - $0.11in^2$ controls

Provide min of #4 bar at 18"oc A_s =0.133in^2/ft

Shear

$V_n=\varphi(V_c)$
$\varphi = 0.9$
$V_c = 0.0316(\beta)(\sqrt{f'_c})(b_v)(d_v) = 0.0316(2)(2.45ksi)(12in)(21.625in) = 40.2$ k/ft
$V_n = 0.9*40.2$ k/ft = **36.2 k/ft >> 10.3 k/ft - OK**

Foundation Footing:

$M_u = (q)(b-b_t-t_w)^2/2 = 4517psf(9ft-3.5ft-2ft)^2/2 = 27.6$ k/ft
$V_u = (q)(b-b_t-t_w) = 4517psf(9ft-3.5ft-2ft) = 15.8$ k/ft

Minimum Flexural (AASHTO 5.7.3.3.2) -

$1.33M_u$
$1.33(M_u) = 1.33(27.8$k-ft/ft$)$ = **37.0 k-ft/ft - Controls**

-or-

$1.2M_{cr}$
$I_g = bd^3/12 = (12in)(24in)^3/12 = 13824$ in^4
$S_g = bd^2/6 = (12in)(24in)^2/6 = 1152$ in^3
$F_r = 0.37\sqrt{f'_c} = 0.37(\sqrt{6ksi}) = 0.906ksi$
$M_{cr} = S_g(f_r) = 1152in^3(0.906ksi) = 1044$ k-in = 87 k-ft

Try #6 at 8in

$A_s = 0.66$ in^2
$T=C = A_s*f_y = (0.66in^2)(60ksi) = 39.6k$
$a = A_s*f_y/(.85)(f'_c)(b) = (0.66in^2)(60ksi)/(0.85)(6ksi)(12in) = 0.65in$
$M_r = \varphi M_n$
$\varphi = 0.90$
$M_r = \varphi A_s*f_y(d-a/2) = (0.90)(0.66in^2)(60ksi)(21.625in-(0.65in/2))/12 =$ **63.3 k-ft/ft > 37.0 k-ft/ft - OK**

Crack Control (AASHTO 5.7.3.4) -

$\gamma_e = 0.75$ (Class 2)
$f_{ss} = [M_u/(d-(a/2)]/A_s = [37.0$k-ft/ft$(12in/ft)/(21.625in-(0.65in/2))]/0.66in2 = 31.6$ ksi
$\beta = 1 + d_c/(0.7(h - d_c) = 1 + 2.375in/(0.7(24in-2.375in)) = 1.16$
$d_c = 2.375in$
$h = 24in$
$S \leq (700*\gamma_e)/(\beta*f_{ss}) - 2d_c = (700*0.75)/(1.16*31.6ksi) - (2)(2.375in) =$ **9.6 in < 8" – OK**

Use #6 at 6 in oc

Temperature and Shrinkage (AASHTO 5.10.8) -

$A_{sT\&S} = 1.30(b)(h)/(2)(b+h)f_y = 1.30(12in)(24in)/(2)(12in+24in)(60ksi) = 0.087$ in^2
$0.11 > A_{sT\&S} > 0.6$ - $0.11in^2$ controls

Provide min of #4 bar at 18"oc A_s =0.133in^2/ft

Shear

$V_n=\varphi(V_c)$
$\varphi = 0.9$
$V_c = 0.0316(\beta)(\sqrt{f'_c})(b_v)(d_v) = 0.0316(2)(2.45ksi)(12in)(21.625in) = 40.2$ k/ft
$V_n = 0.9*40.2$ k/ft = **<u>36.2 k/ft >> 15.8 k/ft - OK</u>**

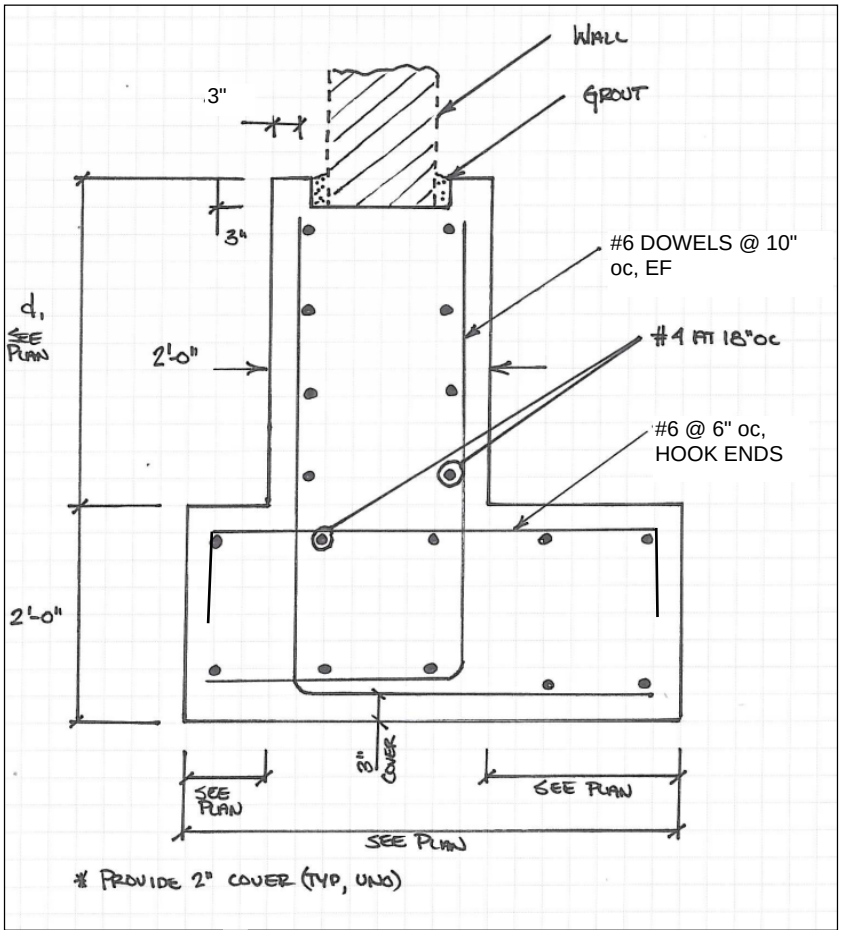

Figure12:**Rigid Frame Foundation Reinforcement**

Rail/Headwall (AASHTO Appendix A13):

For TL-3:

F_t = 54.0k
F_L = 18.0k
F_v = 4.5k
L_t&L_L = 4.0ft
L_v = 18ft
$H_{e(min)}$ = 24in
H_{min} = 27in

Mw: (3) #6
a=(f_y=60ksi)(A_s=1.32in^2)/0.85(f'$_c$=6ksi)(b=20.5") = 0.76in
d = 15in – 2.0in – 1.5(6/8in) = 11.875in
$M_w = \varphi M_n$ = 0.9(60ksi)(1.32in^2)(11.875in-(0.76in/2))/12 = **75.9 k-ft**

Mc: (#6 at 12"oc)
a=(f_y=60ksi)(A_s=0.44in^2)/0.85(f'$_c$=6ksi)(b=12") = 0.43in
d = 15in – 2.0in – 0.5(6/8in) = 12.625in
$M_c = \varphi M_n$ = 0.9(60ksi)(0.44in^2)(12.625in-(0.44in/2)) = **24.6 k-ft**

L_c = (L_t/2) + sqrt[(L_t/2)^2+8H_W(M_w)/M_c] = (4.0ft/2) + sqrt[(4.0ft/2)^2+8(1.71ft)(75.9k-ft)/24.6k-ft] = **8.8 ft**
R_w = (2/(2L_c-L_t))(8M_w+$M_c L_c^2$/H) = [2/(2*8.8ft-4.0ft)][(8*75.9k-ft)+(24.6k-ft)(8.8ft)^2/1.71ft] = **253.1 k**
M_p = 0.9(f_y=50ksi)(S_{W6x20}=14.9in^3)/12 = **55.9 k-ft**
P_P = M_p/$H_{R'}$ = 55.9k-ft/1.75ft = **31.9 k**
R'$_W$ = ($R_W H_W$ – $P_P H_R$)/H_W = [(253.1k)(1.71ft)-(31.9k)(3.21ft)]/1.71ft = **193.2 k**
L= 6.25 ft (max) per project drawings
R'$_R$ = (16M_P + $N^2 P_P$L)/(2NL – L_t) = [(16*55.9k-ft)+(2^2*31.9k*6.25ft)]/(2*2*6.5ft – 4.0ft) = **80.6 k**
He/12 = 24.0in/12 = **2.0 ft**

$R_{bar} \geq F_t$ (AASHTO A13.2-2)
$Y_{bar} \geq H_e/12$ (AASHTO A13.2-3)

R_{bar} = P_P + R'$_R$ + R'$_w$ = 31.9k + 80.6k + 193.2k = **305.7 k >> 54 k - OK**
Y_{bar} = ($P_P H_R$ +R'$_R H_R$ + R'$_w H_w$)/R_{bar} = (31.9k*3.21ft + 80.6k*3.21ft + 193.2k*1.71ft)/305.7k = **2.3 ft > 2.0 ft - OK**

Connection to Rigid Frame:

Overturn Moment: $F_t(H_R)/L_c$ = 54k(3.21ft)/8.8ft – 1.71ft(1.25ft)(0.150pcf)(5.5"/12) = 19.5 k-ft/ft

Tension load: 19.5k-ft/ft/(13"/12) = 18.0 k/ft

Tension Capacity of #6 bar: $\varphi R_n = F_{ut} A_b$ = (0.75)(90ksi)(.44in^2) = 29.7 k/ft - **OK**

Alternate: Use FI-57 inserts by Patterson (capacity = 8.1k) therefore space reinforcement at 5"oc

Tension Lap Lengths (Class C Lap Lengths):

Black Bar (Not top bar – i.e. horizontal bar with less than 12" of concrete below):

#4: $Length_{lap} = (1.7)(1.25)(A_b)(F_y)/(\sqrt{f'_c}) = (1.7)(1.25)(0.20in^2)(60ksi)/(\sqrt{6ksi}) = 10.4in$ – use 1'-0"
#5: $Length_{lap} = (1.7)(1.25)(A_b)(F_y)/(\sqrt{f'_c}) = (1.7)(1.25)(0.31in^2)(60ksi)/(\sqrt{6ksi}) = 16.1in$ – use 1'-5"
#6: $Length_{lap} = (1.7)(1.25)(A_b)(F_y)/(\sqrt{f'_c}) = (1.7)(1.25)(0.44in^2)(60ksi)/(\sqrt{6ksi}) = 22.7in$ – use 1'-11"
#7: $Length_{lap} = (1.7)(1.25)(A_b)(F_y)/(\sqrt{f'_c}) = (1.7)(1.25)(0.60in^2)(60ksi)/(\sqrt{6ksi}) = 31.0in$ – use 2' 7"
#8: $Length_{lap} = (1.7)(1.25)(A_b)(F_y)/(\sqrt{f'_c}) = (1.7)(1.25)(0.79in^2)(60ksi)/(\sqrt{6ksi}) = 40.8in$ – use 3'-5"

Epoxy Bar (Not top bar – i.e. horizontal bar with less than 12" of concrete below):

#4: $Length_{lap} = (1.2)(1.7)(1.25)(A_b)(F_y)/(\sqrt{f'_c}) = (1.2)(1.7)(1.25)(0.20in^2)(60ksi)/(\sqrt{6ksi})$
$= 12.0in$ – use 1'-0"
#5: $Length_{lap} = (1.2)(1.7)(1.25)(A_b)(F_y)/(\sqrt{f'_c}) = (1.2)(1.7)(1.25)(0.31in^2)(60ksi)/(\sqrt{6ksi})$
$= 19.3in$ – use 1'-8"
#6: $Length_{lap} = (1.2)(1.7)(1.25)(A_b)(F_y)/(\sqrt{f'_c}) = (1.2)(1.7)(1.25)(0.44in^2)(60ksi)/(\sqrt{6ksi})$
$= 27.2in$ - use 2'-4"
#7: $Length_{lap} = (1.2)(1.7)(1.25)(A_b)(F_y)/(\sqrt{f'_c}) = (1.2)(1.7)(1.25)(0.60in^2)(60ksi)/(\sqrt{6ksi})$
$= 37.2in$ – use 3'-2"
#8: $Length_{lap} = (1.2)(1.7)(1.25)(A_b)(F_y)/(\sqrt{f'_c}) = (1.2)(1.7)(1.25)(0.79in^2)(60ksi)/(\sqrt{6ksi})$
$= 49.0in$ – use 4'-1"

Epoxy Bar (Top bar – i.e. horizontal bar with more than 12" of concrete below):

#4: $Length_{lap} = (1.4)(1.2)(1.7)(1.25)(A_b)(F_y)/(\sqrt{f'_c}) = (1.4)(1.2)(1.7)(0.20in^2)(60ksi)/(\sqrt{6ksi})$
$= 16.8in$ – use 1'-5"
#5: $Length_{lap} = (1.4)(1.2)(1.7)(1.25)(A_b)(F_y)/(\sqrt{f'_c}) = (1.4)(1.2)(1.7)(0.31in^2)(60ksi)/(\sqrt{6ksi})$
$= 27.0in$ – use 2'-3"
#6: $Length_{lap} = (1.4)(1.2)(1.7)(1.25)(A_b)(F_y)/(\sqrt{f'_c}) = (1.4)(1.2)(1.7)(0.44in^2)(60ksi)/(\sqrt{6ksi})$
$= 38.1in$ – use 3'-3"
#7: $Length_{lap} = (1.4)(1.2)(1.7)(1.25)(A_b)(F_y)/(\sqrt{f'_c}) = (1.4)(1.2)(1.7)(0.60in^2)(60ksi)/(\sqrt{6ksi})$
$= 52.1in$ – use 4'-5"
#8: $Length_{lap} = (1.4)(1.2)(1.7)(1.25)(A_b)(F_y)/(\sqrt{f'_c}) = (1.4)(1.2)(1.7)(0.79in^2)(60ksi)/(\sqrt{6ksi})$
$= 68.6in$ – use 5'-9"

Load Rating:

$RF = [C - (\gamma_{DC})(DC) \pm (\gamma_P)(P)]/((\gamma_{LL})(LL + IM)]$ AASHTO 6A.4.2 Manual For Bridge Evaluation

C = Capacity (see "Capacity of Frame") = $\varphi_c\varphi_s\varphi R_n$
φ_c= 1.0 (AASHTO Table 6A.4.2.3-1: Good)
φ_s= 1.0 (AASHTO Table 6A.4.2.4-1: Slab Bridge)
φR_n= See Capacity of Frame Calculations
γ_{DC} = LRFD load factor = 1.25 (AASHTO Table 6A.4.2.2-1)
DC = Dead Load of Structural Components and Attachments
γ_P = LRFD load Factor = 1.0
P = Permanent Load (Excluding DC)
γ_{LL} = Evaluation Live Load Factor 1.75 (inventory) and 1.35 (operating) (AASHTO Table 6A.4.3.2.2-1)
LL = Live Load
IM = Dynamic Load Allowance = 1.33 (AASHTO 6A.4.4.3)

Summary:

Frame	+Flexural	C= 158.8 k-ft/ft
	-Flexural	C= 158.8 k-ft/ft
	Shear	C= 32.6 k-ft/ft
Wall	Flexural	C= 73.3 k-ft/ft
	Shear	C= 15.9 k/ft

HL93 RATING (Truck and Tandem):

Refer to Appendix for RISA Output (Appendix C)

INVENTORY:

Slab + Flexural:

C = 158.8 k-ft/ft
(γ_{DC})(DC) = 29.8 k-ft/ft
(γ_{P})(P) = 16.7 k-ft/ft
(γ_{LL})(LL + IM) = 96.4 k-ft/ft

RF = [C – (γ_{DC})(DC) ± (γ_{P})(P)]/((γ_{LL})(LL + IM)] = (158.8 k-ft/ft – 29.8 k-ft/ft – 16.7 k-ft/ft)/96.4 k-ft/ft = **1.16**

Slab - Flexural:

C= 158.8 k-ft/ft
(γ_{DC})(DC) = 15.5 k-ft/ft
(γ_{P})(P) = 11.1 k-ft/ft
(γ_{LL})(LL + IM) = 40.1 k-ft/ft

RF = [C – (γ_{DC})(DC) ± (γ_{P})(P)]/((γ_{LL})(LL + IM)] = (158.8 k-ft/ft – 15.5 k-ft/ft – 11.1 k-ft/ft)/40.1 k-ft/ft = 3.30

Slab Shear:

C= 32.6 k/ft
(γ_{DC})(DC) = 5.5 k/ft
(γ_{P})(P) = 3.4 k/ft
(γ_{LL})(LL + IM) = 17.3 k/ft

RF = [C – (γ_{DC})(DC) ± (γ_{P})(P)]/((γ_{LL})(LL + IM)] = (32.6 k/ft – 5.5 k/ft – 3.4 k/ft)/17.3 k/ft = 1.37

Wall Flexural:

C = 73.3 k-ft/ft
(γ_{DC})(DC) = 15.5 k-ft/ft
(γ_{P})(P) = 11.1 k-ft/ft
(γ_{LL})(LL + IM) = 40.1 k-ft/ft

RF = [C – (γ_{DC})(DC) ± (γ_{P})(P)]/((γ_{LL})(LL + IM)] = (73.3 k-ft/ft – 15.5 k-ft/ft – 11.1 k-ft/ft)/40.1 k-ft/ft = **1.16**

Wall Shear:

C= 15.9 k/ft
(γ_{DC})(DC) = 2.0 k/ft
(γ_{P})(P) = 2.8 k/ft

$(\gamma_{LL})(LL + IM) = 5.3$ k/ft

RF = $[C - (\gamma_{DC})(DC) \pm (\gamma_P)(P)]/((\gamma_{LL})(LL + IM)]$ = (15.9 k/ft – 2.0 k/ft – 2.8 k/ft)/5.3 k/ft = 2.09

Therefore slab + flex and wall flex controls RF: 1.16

Rating in Tons (AASHTO 6A4.4.4) = RT = RFxW, for HL93 W=36

RT = (1.16)(36) = 41.8 Tons

OPERATING:

Slab + Flexural:

C = 158.8 k-ft/ft
$(\gamma_{DC})(DC) = 29.8$ k-ft/ft
$(\gamma_P)(P) = 16.7$ k-ft/ft
$(\gamma_{LL})(LL + IM) = 74.4$ k-ft/ft

RF = $[C - (\gamma_{DC})(DC) \pm (\gamma_P)(P)]/((\gamma_{LL})(LL + IM)]$ = (158.8 k-ft/ft – 29.8 k-ft/ft – 16.7 k-ft/ft)/74.4 k-ft/ft = **1.51**

Slab - Flexural:

C= 158.8 k-ft/ft
$(\gamma_{DC})(DC) = 15.5$ k-ft/ft
$(\gamma_P)(P) = 11.1$ k-ft/ft
$(\gamma_{LL})(LL + IM) = 30.9$ k-ft/ft

RF = $[C - (\gamma_{DC})(DC) \pm (\gamma_P)(P)]/((\gamma_{LL})(LL + IM)]$ = (158.8 k-ft/ft – 15.5 k-ft/ft – 11.1 k-ft/ft)/30.9 k-ft/ft = 4.28

Slab Shear:

C= 32.6 k/ft
$(\gamma_{DC})(DC) = 5.5$ k/ft
$(\gamma_P)(P) = 3.4$ k/ft
$(\gamma_{LL})(LL + IM) = 13.4$ k/ft

RF = $[C - (\gamma_{DC})(DC) \pm (\gamma_P)(P)]/((\gamma_{LL})(LL + IM)]$ = (32.6 k/ft – 5.5 k/ft – 3.4 k/ft)/13.4 k/ft = 1.77

Wall Flexural:

C = 73.3 k-ft/ft
$(\gamma_{DC})(DC) = 15.5$ k-ft/ft
$(\gamma_P)(P) = 11.1$ k-ft/ft
$(\gamma_{LL})(LL + IM) = 30.9$ k-ft/ft

RF = $[C - (\gamma_{DC})(DC) \pm (\gamma_P)(P)]/((\gamma_{LL})(LL + IM)]$ = (73.3 k-ft/ft – 15.5 k-ft/ft – 11.1 k-ft/ft)/30.9 k-ft/ft = **1.51**

Wall Shear:

C= 15.9 k/ft
$(\gamma_{DC})(DC)$ = 2.0 k/ft
$(\gamma_{P})(P)$ = 2.8 k/ft
$(\gamma_{LL})(LL + IM)$ = 4.1 k/ft

RF = $[C - (\gamma_{DC})(DC) \pm (\gamma_{P})(P)]/((\gamma_{LL})(LL + IM)]$ = (15.9 k/ft – 2.0 k/ft – 2.8 k/ft)/4.1 k/ft = 2.71

Therefore slab + flex and wall flex controls RF: 1.51

Rating in Tons (AASHTO 6A4.4.4) = RT = RFxW, for HL93 W=36

RT = (1.51)(36) = 54.4 Tons

HL20 RATING:

Refer to Appendix for RISA Output (Appendix C)

INVENTORY:

Slab + Flexural:

C = 158.8 k-ft/ft
(γ_{DC})(DC) = 29.8 k-ft/ft
(γ_P)(P) = 16.7 k-ft/ft
(γ_{LL})(LL + IM) = 77.5 k-ft/ft

RF = [C – (γ_{DC})(DC) ± (γ_P)(P)]/((γ_{LL})(LL + IM)] = (158.8 k-ft/ft – 29.8 k-ft/ft – 16.7 k-ft/ft)/77.5 k-ft/ft = **1.45**

Slab - Flexural:

C= 158.8 k-ft/ft
(γ_{DC})(DC) = 15.5 k-ft/ft
(γ_P)(P) = 11.1 k-ft/ft
(γ_{LL})(LL + IM) = 30.6 k-ft/ft

RF = [C – (γ_{DC})(DC) ± (γ_P)(P)]/((γ_{LL})(LL + IM)] = (158.8 k-ft/ft – 15.5 k-ft/ft – 11.1 k-ft/ft)/30.6 k-ft/ft = 4.32

Slab Shear:

C= 32.6 k/ft
(γ_{DC})(DC) = 5.5 k/ft
(γ_P)(P) = 3.4 k/ft
(γ_{LL})(LL + IM) = 14.0 k/ft

RF = [C – (γ_{DC})(DC) ± (γ_P)(P)]/((γ_{LL})(LL + IM)] = (32.6 k/ft – 5.5 k/ft – 3.4 k/ft)/14.0 k/ft = 1.69

Wall Flexural:

C = 73.3 k-ft/ft
(γ_{DC})(DC) = 15.5 k-ft/ft
(γ_P)(P) = 11.1 k-ft/ft
(γ_{LL})(LL + IM) = 30.6 k-ft/ft

RF = [C – (γ_{DC})(DC) ± (γ_P)(P)]/((γ_{LL})(LL + IM)] = (73.3 k-ft/ft – 15.5 k-ft/ft – 11.1 k-ft/ft)/30.6 k-ft/ft = 1.53

Wall Shear:

C= 15.9 k/ft
(γ_{DC})(DC) = 2.0 k/ft
(γ_P)(P) = 2.8 k/ft

$(\gamma_{LL})(LL + IM) = 4.0$ k/ft

RF = $[C - (\gamma_{DC})(DC) \pm (\gamma_P)(P)]/((\gamma_{LL})(LL + IM)]$ = (15.9 k/ft – 2.0 k/ft – 2.8 k/ft)/4.0 k/ft = 2.78

Therefore slab + flex controls RF: 1.45

Rating in Tons (AASHTO 6A4.4.4) = RT = RFxW, for HL93 W=20

RT = (1.45)(20) = 29.0 Tons

OPERATING:

Slab + Flexural:

C = 158.8 k-ft/ft
$(\gamma_{DC})(DC)$ = 29.8 k-ft/ft
$(\gamma_P)(P)$ = 16.7 k-ft/ft
$(\gamma_{LL})(LL + IM)$ = 59.8 k-ft/ft

RF = $[C - (\gamma_{DC})(DC) \pm (\gamma_P)(P)]/((\gamma_{LL})(LL + IM)]$ = (158.8 k-ft/ft – 29.8 k-ft/ft – 16.7 k-ft/ft)/59.8 k-ft/ft = **1.88**

Slab - Flexural:

C= 158.8 k-ft/ft
$(\gamma_{DC})(DC)$ = 15.5 k-ft/ft
$(\gamma_P)(P)$ = 11.1 k-ft/ft
$(\gamma_{LL})(LL + IM)$ = 23.6 k-ft/ft

RF = $[C - (\gamma_{DC})(DC) \pm (\gamma_P)(P)]/((\gamma_{LL})(LL + IM)]$ = (158.8 k-ft/ft – 15.5 k-ft/ft – 11.1 k-ft/ft)/23.6 k-ft/ft = 5.60

Slab Shear:

C= 32.6 k/ft
$(\gamma_{DC})(DC)$ = 5.5 k/ft
$(\gamma_P)(P)$ = 3.4 k/ft
$(\gamma_{LL})(LL + IM)$ = 10.8 k/ft

RF = $[C - (\gamma_{DC})(DC) \pm (\gamma_P)(P)]/((\gamma_{LL})(LL + IM)]$ = (32.6 k/ft – 5.5 k/ft – 3.4 k/ft)/10.8 k/ft = 2.19

Wall Flexural:

C = 73.3 k-ft/ft
$(\gamma_{DC})(DC)$ = 15.5 k-ft/ft
$(\gamma_P)(P)$ = 11.1 k-ft/ft
$(\gamma_{LL})(LL + IM)$ = 23.6 k-ft/ft

RF = $[C - (\gamma_{DC})(DC) \pm (\gamma_P)(P)]/((\gamma_{LL})(LL + IM)]$ = (73.3 k-ft/ft – 15.5 k-ft/ft – 11.1 k-ft/ft)/23.6 k-ft/ft = 1.98

Wall Shear:

C= 15.9 k/ft
$(\gamma_{DC})(DC)$ = 2.0 k/ft
$(\gamma_{P})(P)$ = 2.8 k/ft
$(\gamma_{LL})(LL + IM)$ = 3.1 k/ft

RF = $[C - (\gamma_{DC})(DC) \pm (\gamma_{P})(P)]/((\gamma_{LL})(LL + IM)]$ = (15.9 k/ft – 2.0 k/ft – 2.8 k/ft)/3.1 k/ft = 3.58

Therefore slab + flex controls RF: 1.88

Rating in Tons (AASHTO 6A4.4.4) = RT = RFxW, for HL93 W=20

RT = (1.88)(20) = 37.6 Tons

3S2 RATING:

Refer to Appendix for RISA Output (Appendix C)

INVENTORY:

C = 158.8 k-ft/ft
(γ_{DC})(DC) = 29.8 k-ft/ft
(γ_{P})(P) = 16.7 k-ft/ft
(γ_{LL})(LL + IM) = 69.5 k-ft/ft

RF = [C – (γ_{DC})(DC) ± (γ_{P})(P)]/((γ_{LL})(LL + IM)] = (158.8 k-ft/ft – 29.8 k-ft/ft – 16.7 k-ft/ft)/69.5 k-ft/ft = 1.62

Slab - Flexural:

C= 158.8 k-ft/ft
(γ_{DC})(DC) = 15.5 k-ft/ft
(γ_{P})(P) = 11.1 k-ft/ft
(γ_{LL})(LL + IM) = 31.0 k-ft/ft

RF = [C – (γ_{DC})(DC) ± (γ_{P})(P)]/((γ_{LL})(LL + IM)] = (158.8 k-ft/ft – 15.5 k-ft/ft – 11.1 k-ft/ft)/31.0 k-ft/ft = 4.26

Slab Shear:

C= 32.6 k/ft
(γ_{DC})(DC) = 5.5 k/ft
(γ_{P})(P) = 3.4 k/ft
(γ_{LL})(LL + IM) = 13.3 k/ft

RF = [C – (γ_{DC})(DC) ± (γ_{P})(P)]/((γ_{LL})(LL + IM)] = (32.6 k/ft – 5.5 k/ft – 3.4 k/ft)/13.3 k/ft = 1.78

Wall Flexural:

C = 73.3 k-ft/ft
(γ_{DC})(DC) = 15.5 k-ft/ft
(γ_{P})(P) = 11.1 k-ft/ft
(γ_{LL})(LL + IM) = 31.0 k-ft/ft

RF = [C – (γ_{DC})(DC) ± (γ_{P})(P)]/((γ_{LL})(LL + IM)] = (73.3 k-ft/ft – 15.5 k-ft/ft – 11.1 k-ft/ft)/31.0 k-ft/ft = **1.51**

Wall Shear:

C= 15.9 k/ft
(γ_{DC})(DC) = 2.0 k/ft
(γ_{P})(P) = 2.8 k/ft
(γ_{LL})(LL + IM) = 4.0 k/ft

RF = [C – (γ_{DC})(DC) ± (γ_P)(P)]/((γ_{LL})(LL + IM)] = (15.9 k/ft – 2.0 k/ft – 2.8 k/ft)/4.0 k/ft = 2.78

Therefore wall flex controls RF: 1.51

Rating in Tons (AASHTO 6A4.4.4) = RT = RFxW, for 3S2 W=36

RT = (1.51)(36) = 54.4 Tons

OPERATING:

C = 158.8 k-ft/ft
(γ_{DC})(DC) = 29.8 k-ft/ft
(γ_P)(P) = 16.7 k-ft/ft
(γ_{LL})(LL + IM) = 53.6 k-ft/ft

RF = [C – (γ_{DC})(DC) ± (γ_P)(P)]/((γ_{LL})(LL + IM)] = (158.8 k-ft/ft – 29.8 k-ft/ft – 16.7 k-ft/ft)/53.6 k-ft/ft = 2.10

Slab - Flexural:

C= 158.8 k-ft/ft
(γ_{DC})(DC) = 15.5 k-ft/ft
(γ_P)(P) = 11.1 k-ft/ft
(γ_{LL})(LL + IM) = 23.9 k-ft/ft

RF = [C – (γ_{DC})(DC) ± (γ_P)(P)]/((γ_{LL})(LL + IM)] = (158.8 k-ft/ft – 15.5 k-ft/ft – 11.1 k-ft/ft)/23.9 k-ft/ft = 5.53

Slab Shear:

C= 32.6 k/ft
(γ_{DC})(DC) = 5.5 k/ft
(γ_P)(P) = 3.4 k/ft
(γ_{LL})(LL + IM) = 10.3 k/ft

RF = [C – (γ_{DC})(DC) ± (γ_P)(P)]/((γ_{LL})(LL + IM)] = (32.6 k/ft – 5.5 k/ft – 3.4 k/ft)/10.3 k/ft = 2.30

Wall Flexural:

C = 73.3 k-ft/ft
(γ_{DC})(DC) = 15.5 k-ft/ft
(γ_P)(P) = 11.1 k-ft/ft
(γ_{LL})(LL + IM) = 23.9 k-ft/ft

RF = [C – (γ_{DC})(DC) ± (γ_P)(P)]/((γ_{LL})(LL + IM)] = (73.3 k-ft/ft – 15.5 k-ft/ft – 11.1 k-ft/ft)/23.9 k-ft/ft = **1.95**

Wall Shear:

C= 15.9 k/ft

$(\gamma_{DC})(DC) = 2.0$ k/ft
$(\gamma_{P})(P) = 2.8$ k/ft
$(\gamma_{LL})(LL + IM) = 3.1$ k/ft

$RF = [C - (\gamma_{DC})(DC) \pm (\gamma_{P})(P)]/((\gamma_{LL})(LL + IM)] = (15.9 \text{ k/ft} - 2.0 \text{ k/ft} - 2.8 \text{ k/ft})/3.1 \text{ k/ft} = 3.58$

Therefore wall flex controls RF: 1.95

Rating in Tons (AASHTO 6A4.4.4) = RT = RFxW, for 3S2 W=36

RT = (1.95)(36) = 70.2 Tons

6 Axle RATING:

Refer to Appendix for RISA Output (Appendix C)

INVENTORY:

C = 158.8 k-ft/ft
(γ_{DC})(DC) = 29.8 k-ft/ft
(γ_P)(P) = 16.7 k-ft/ft
(γ_{LL})(LL + IM) = 68.3 k-ft/ft

RF = [C – (γ_{DC})(DC) ± (γ_P)(P)]/((γ_{LL})(LL + IM)] = (158.8 k-ft/ft – 29.8 k-ft/ft – 16.7 k-ft/ft)/68.3 k-ft/ft = 1.64

Slab - Flexural:

C= 158.8 k-ft/ft
(γ_{DC})(DC) = 15.5 k-ft/ft
(γ_P)(P) = 11.1 k-ft/ft
(γ_{LL})(LL + IM) = 31.9 k-ft/ft

RF = [C – (γ_{DC})(DC) ± (γ_P)(P)]/((γ_{LL})(LL + IM)] = (158.8 k-ft/ft – 15.5 k-ft/ft – 11.1 k-ft/ft)/31.9 k-ft/ft = 4.14

Slab Shear:

C= 32.6 k/ft
(γ_{DC})(DC) = 5.5 k/ft
(γ_P)(P) = 3.4 k/ft
(γ_{LL})(LL + IM) = 14.7 k/ft

RF = [C – (γ_{DC})(DC) ± (γ_P)(P)]/((γ_{LL})(LL + IM)] = (32.6 k/ft – 5.5 k/ft – 3.4 k/ft)/14.7 k/ft = 1.61

Wall Flexural:

C = 73.3 k-ft/ft
(γ_{DC})(DC) = 15.5 k-ft/ft
(γ_P)(P) = 11.1 k-ft/ft
(γ_{LL})(LL + IM) = 31.9 k-ft/ft

RF = [C – (γ_{DC})(DC) ± (γ_P)(P)]/((γ_{LL})(LL + IM)] = (73.3 k-ft/ft – 15.5 k-ft/ft – 11.1 k-ft/ft)/31.9 k-ft/ft = **1.46**

Wall Shear:

C= 15.9 k/ft
(γ_{DC})(DC) = 2.0 k/ft
(γ_P)(P) = 2.8 k/ft
(γ_{LL})(LL + IM) = 4.2 k/ft

RF = [C – (γ_{DC})(DC) ± (γ_P)(P)]/((γ_{LL})(LL + IM)] = (15.9 k/ft – 2.0 k/ft – 2.8 k/ft)/4.2 k/ft = 2.65

Therefore wall flex controls RF: 1.46

Rating in Tons (AASHTO 6A4.4.4) = RT = RFxW, for 6 Axle W=66

RT = (1.46)(66) = 96.4 Tons (operating)

OPERATING:

C = 158.8 k-ft/ft
(γ_{DC})(DC) = 29.8 k-ft/ft
(γ_P)(P) = 16.7 k-ft/ft
(γ_{LL})(LL + IM) = 52.7 k-ft/ft

RF = [C – (γ_{DC})(DC) ± (γ_P)(P)]/((γ_{LL})(LL + IM)] = (158.8 k-ft/ft – 29.8 k-ft/ft – 16.7 k-ft/ft)/52.7 k-ft/ft = 2.14

Slab - Flexural:

C= 158.8 k-ft/ft
(γ_{DC})(DC) = 15.5 k-ft/ft
(γ_P)(P) = 11.1 k-ft/ft
(γ_{LL})(LL + IM) = 24.6 k-ft/ft

RF = [C – (γ_{DC})(DC) ± (γ_P)(P)]/((γ_{LL})(LL + IM)] = (158.8 k-ft/ft – 15.5 k-ft/ft – 11.1 k-ft/ft)/24.6 k-ft/ft = 5.37

Slab Shear:

C= 32.6 k/ft
(γ_{DC})(DC) = 5.5 k/ft
(γ_P)(P) = 3.4 k/ft
(γ_{LL})(LL + IM) = 11.3 k/ft

RF = [C – (γ_{DC})(DC) ± (γ_P)(P)]/((γ_{LL})(LL + IM)] = (32.6 k/ft – 5.5 k/ft – 3.4 k/ft)/11.3 k/ft = 2.10

Wall Flexural:

C = 73.3 k-ft/ft
(γ_{DC})(DC) = 15.5 k-ft/ft
(γ_P)(P) = 11.1 k-ft/ft
(γ_{LL})(LL + IM) = 24.6 k-ft/ft

RF = [C – (γ_{DC})(DC) ± (γ_P)(P)]/((γ_{LL})(LL + IM)] = (73.3 k-ft/ft – 15.5 k-ft/ft – 11.1 k-ft/ft)/24.6 k-ft/ft = **1.90**

Wall Shear:

C= 15.9 k/ft
$(\gamma_{DC})(DC)$ = 2.0 k/ft
$(\gamma_{P})(P)$ = 2.8 k/ft
$(\gamma_{LL})(LL + IM)$ = 3.2 k/ft

RF = $[C - (\gamma_{DC})(DC) \pm (\gamma_{P})(P)]/((\gamma_{LL})(LL + IM)]$ = (15.9 k/ft – 2.0 k/ft – 2.8 k/ft)/3.2 k/ft = 3.47

Therefore wall flex controls RF: 1.90

Rating in Tons (AASHTO 6A4.4.4) = RT = RFxW, for 6 Axle W=66

RT = (1.90)(66) = 125.4 Tons

3 Axle RATING:

Refer to Appendix for RISA Output (Appendix C)

OPERATING:

Slab + Flexural:

C = 158.8 k-ft/ft
(γ_{DC})(DC) = 29.8 k-ft/ft
(γ_{P})(P) = 16.7 k-ft/ft
(γ_{LL})(LL + IM) = 61.8 k-ft/ft

RF = [C – (γ_{DC})(DC) ± (γ_{P})(P)]/((γ_{LL})(LL + IM)] = (158.8 k-ft/ft – 29.8 k-ft/ft – 16.7 k-ft/ft)/61.8 k-ft/ft = 1.82

Slab - Flexural:

C= 158.8 k-ft/ft
(γ_{DC})(DC) = 15.5 k-ft/ft
(γ_{P})(P) = 11.1 k-ft/ft
(γ_{LL})(LL + IM) = 28.4 k-ft/ft

RF = [C – (γ_{DC})(DC) ± (γ_{P})(P)]/((γ_{LL})(LL + IM)] = (158.8 k-ft/ft – 15.5 k-ft/ft – 11.1 k-ft/ft)/28.4 k-ft/ft = 4.65

Slab Shear:

C= 32.6 k/ft
(γ_{DC})(DC) = 5.5 k/ft
(γ_{P})(P) = 3.4 k/ft
(γ_{LL})(LL + IM) = 13.1 k/ft

RF = [C – (γ_{DC})(DC) ± (γ_{P})(P)]/((γ_{LL})(LL + IM)] = (32.6 k/ft – 5.5 k/ft – 3.4 k/ft)/13.1 k/ft = 1.81

Wall Flexural:

C = 73.3 k-ft/ft
(γ_{DC})(DC) = 15.5 k-ft/ft
(γ_{P})(P) = 11.1 k-ft/ft
(γ_{LL})(LL + IM) = 28.4 k-ft/ft

RF = [C – (γ_{DC})(DC) ± (γ_{P})(P)]/((γ_{LL})(LL + IM)] = (73.3 k-ft/ft – 15.5 k-ft/ft – 11.1 k-ft/ft)/28.4 k-ft/ft = **1.64**

Wall Shear:

C= 15.9 k/ft
(γ_{DC})(DC) = 2.0 k/ft
(γ_{P})(P) = 2.8 k/ft

$(\gamma_{LL})(LL + IM) = 3.7$ k/ft

RF = $[C - (\gamma_{DC})(DC) \pm (\gamma_P)(P)]/((\gamma_{LL})(LL + IM)]$ = (15.9 k/ft – 2.0 k/ft – 2.8 k/ft)/3.7 k/ft = 3.00

Therefore wall flex controls RF: 1.64

Rating in Tons (AASHTO 6A4.4.4) = RT = RFxW, for 3 Axle W=30

RT = (1.64)(30) = 49.2 Tons

OPERATING:

C = 158.8 k-ft/ft
$(\gamma_{DC})(DC) = 29.8$ k-ft/ft
$(\gamma_P)(P) = 16.7$ k-ft/ft
$(\gamma_{LL})(LL + IM) = 47.7$ k-ft/ft

RF = $[C - (\gamma_{DC})(DC) \pm (\gamma_P)(P)]/((\gamma_{LL})(LL + IM)]$ = (158.8 k-ft/ft – 29.8 k-ft/ft – 16.7 k-ft/ft)/47.7 k-ft/ft = 2.35

Slab - Flexural:

C= 158.8 k-ft/ft
$(\gamma_{DC})(DC) = 15.5$ k-ft/ft
$(\gamma_P)(P) = 11.1$ k-ft/ft
$(\gamma_{LL})(LL + IM) = 21.9$ k-ft/ft

RF = $[C - (\gamma_{DC})(DC) \pm (\gamma_P)(P)]/((\gamma_{LL})(LL + IM)]$ = (158.8 k-ft/ft – 15.5 k-ft/ft – 11.1 k-ft/ft)/21.9 k-ft/ft = 6.04

Slab Shear:

C= 32.6 k/ft
$(\gamma_{DC})(DC) = 5.5$ k/ft
$(\gamma_P)(P) = 3.4$ k/ft
$(\gamma_{LL})(LL + IM) = 10.1$ k/ft

RF = $[C - (\gamma_{DC})(DC) \pm (\gamma_P)(P)]/((\gamma_{LL})(LL + IM)]$ = (32.6 k/ft – 5.5 k/ft – 3.4 k/ft)/10.1 k/ft = 2.35

Wall Flexural:

C = 73.3 k-ft/ft
$(\gamma_{DC})(DC) = 15.5$ k-ft/ft
$(\gamma_P)(P) = 11.1$ k-ft/ft
$(\gamma_{LL})(LL + IM) = 21.9$ k-ft/ft

RF = $[C - (\gamma_{DC})(DC) \pm (\gamma_P)(P)]/((\gamma_{LL})(LL + IM)]$ = (73.3 k-ft/ft – 15.5 k-ft/ft – 11.1 k-ft/ft)/21.9 k-ft/ft = **2.13**

Wall Shear:

C= 15.9 k/ft
$(\gamma_{DC})(DC)$ = 2.0 k/ft
$(\gamma_{P})(P)$ = 2.8 k/ft
$(\gamma_{LL})(LL + IM)$ = 2.8 k/ft

RF = $[C - (\gamma_{DC})(DC) \pm (\gamma_{P})(P)]/((\gamma_{LL})(LL + IM)]$ = (15.9 k/ft – 2.0 k/ft – 2.8 k/ft)/2.8 k/ft = 3.96

Therefore wall flex controls RF: 2.13

Rating in Tons (AASHTO 6A4.4.4) = RT = RFxW, for 3 Axle W=30

RT = (2.13)(30) = 63.9 Tons

4 Axle RATING:

Refer to Appendix for RISA Output (Appendix C)

INVENTORY:

Slab + Flexural:

C = 158.8 k-ft/ft
(γ_{DC})(DC) = 29.8 k-ft/ft
(γ_{P})(P) = 16.7 k-ft/ft
(γ_{LL})(LL + IM) = 51.8 k-ft/ft

RF = [C – (γ_{DC})(DC) ± (γ_{P})(P)]/((γ_{LL})(LL + IM)] = (158.8 k-ft/ft – 29.8 k-ft/ft – 16.7 k-ft/ft)/51.8 k-ft/ft = 2.17

Slab - Flexural:

C= 158.8 k-ft/ft
(γ_{DC})(DC) = 15.5 k-ft/ft
(γ_{P})(P) = 11.1 k-ft/ft
(γ_{LL})(LL + IM) = 23.6 k-ft/ft

RF = [C – (γ_{DC})(DC) ± (γ_{P})(P)]/((γ_{LL})(LL + IM)] = (158.8 k-ft/ft – 15.5 k-ft/ft – 11.1 k-ft/ft)/23.6 k-ft/ft = 5.60

Slab Shear:

C= 32.6 k/ft
(γ_{DC})(DC) = 5.5 k/ft
(γ_{P})(P) = 3.4 k/ft
(γ_{LL})(LL + IM) = 10.9 k/ft

RF = [C – (γ_{DC})(DC) ± (γ_{P})(P)]/((γ_{LL})(LL + IM)] = (32.6 k/ft – 5.5 k/ft – 3.4 k/ft)/10.9 k/ft = 2.17

Wall Flexural:

C = 73.3 k-ft/ft
(γ_{DC})(DC) = 15.5 k-ft/ft
(γ_{P})(P) = 11.1 k-ft/ft
(γ_{LL})(LL + IM) = 23.6 k-ft/ft

RF = [C – (γ_{DC})(DC) ± (γ_{P})(P)]/((γ_{LL})(LL + IM)] = (73.3 k-ft/ft – 15.5 k-ft/ft – 11.1 k-ft/ft)/23.6 k-ft/ft = **1.98**

Wall Shear:

C= 15.9 k/ft
(γ_{DC})(DC) = 2.0 k/ft
(γ_{P})(P) = 2.8 k/ft

$(\gamma_{LL})(LL + IM) = 3.2$ k/ft

RF = [C – (γ_{DC})(DC) ± (γ_P)(P)]/((γ_{LL})(LL + IM)] = (15.9 k/ft – 2.0 k/ft – 2.8 k/ft)/3.2 k/ft = 3.47

Therefore wall flex controls RF: 1.98

Rating in Tons (AASHTO 6A4.4.4) = RT = RFxW, for 4 Axle W=34.5

RT = (1.98)(34.5) = 68.3 Tons

OPERATING:

Slab + Flexural:

C = 158.8 k-ft/ft
(γ_{DC})(DC) = 29.8 k-ft/ft
(γ_P)(P) = 16.7 k-ft/ft
(γ_{LL})(LL + IM) = 40.0 k-ft/ft

RF = [C – (γ_{DC})(DC) ± (γ_P)(P)]/((γ_{LL})(LL + IM)] = (158.8 k-ft/ft – 29.8 k-ft/ft – 16.7 k-ft/ft)/40.0 k-ft/ft = 2.81

Slab - Flexural:

C= 158.8 k-ft/ft
(γ_{DC})(DC) = 15.5 k-ft/ft
(γ_P)(P) = 11.1 k-ft/ft
(γ_{LL})(LL + IM) = 18.2 k-ft/ft

RF = [C – (γ_{DC})(DC) ± (γ_P)(P)]/((γ_{LL})(LL + IM)] = (158.8 k-ft/ft – 15.5 k-ft/ft – 11.1 k-ft/ft)/18.2 k-ft/ft = 7.26

Slab Shear:

C= 32.6 k/ft
(γ_{DC})(DC) = 5.5 k/ft
(γ_P)(P) = 3.4 k/ft
(γ_{LL})(LL + IM) = 8.4 k/ft

RF = [C – (γ_{DC})(DC) ± (γ_P)(P)]/((γ_{LL})(LL + IM)] = (32.6 k/ft – 5.5 k/ft – 3.4 k/ft)/8.4 k/ft = 2.82

Wall Flexural:

C = 73.3 k-ft/ft
(γ_{DC})(DC) = 15.5 k-ft/ft
(γ_P)(P) = 11.1 k-ft/ft
(γ_{LL})(LL + IM) = 18.2 k-ft/ft

RF = [C – (γ_{DC})(DC) ± (γ_P)(P)]/((γ_{LL})(LL + IM)] = (73.3 k-ft/ft – 15.5 k-ft/ft – 11.1 k-ft/ft)/18.2 k-ft/ft = **2.57**

Wall Shear:

C= 15.9 k/ft
$(\gamma_{DC})(DC)$ = 2.0 k/ft
$(\gamma_{P})(P)$ = 2.8 k/ft
$(\gamma_{LL})(LL + IM)$ = 2.4 k/ft

RF = $[C - (\gamma_{DC})(DC) \pm (\gamma_{P})(P)]/((\gamma_{LL})(LL + IM)]$ = (15.9 k/ft – 2.0 k/ft – 2.8 k/ft)/2.4 k/ft = 4.63

Therefore wall flex controls RF: 2.57

Rating in Tons (AASHTO 6A4.4.4) = RT = RFxW, for 4 Axle W=34.5

RT = (2.57)(34.5) = 88.7 Tons (operating)

5 Axle Semi RATING:

Refer to Appendix for RISA Output (Appendix C)

INVENTORY:

Slab + Flexural:

C = 158.8 k-ft/ft
(γ_{DC})(DC) = 29.8 k-ft/ft
(γ_{P})(P) = 16.7 k-ft/ft
(γ_{LL})(LL + IM) = 52.5 k-ft/ft

RF = [C – (γ_{DC})(DC) ± (γ_{P})(P)]/((γ_{LL})(LL + IM)] = (158.8 k-ft/ft – 29.8 k-ft/ft – 16.7 k-ft/ft)/52.5 k-ft/ft = 2.14

Slab - Flexural:

C= 158.8 k-ft/ft
(γ_{DC})(DC) = 15.5 k-ft/ft
(γ_{P})(P) = 11.1 k-ft/ft
(γ_{LL})(LL + IM) = 24.9 k-ft/ft

RF = [C – (γ_{DC})(DC) ± (γ_{P})(P)]/((γ_{LL})(LL + IM)] = (158.8 k-ft/ft – 15.5 k-ft/ft – 11.1 k-ft/ft)/24.9 k-ft/ft = 5.31

Slab Shear:

C= 32.6 k/ft
(γ_{DC})(DC) = 5.5 k/ft
(γ_{P})(P) = 3.4 k/ft
(γ_{LL})(LL + IM) = 11.0 k/ft

RF = [C – (γ_{DC})(DC) ± (γ_{P})(P)]/((γ_{LL})(LL + IM)] = (32.6 k/ft – 5.5 k/ft – 3.4 k/ft)/11.0 k/ft = 2.15

Wall Flexural:

C = 73.3 k-ft/ft
(γ_{DC})(DC) = 15.5 k-ft/ft
(γ_{P})(P) = 11.1 k-ft/ft
(γ_{LL})(LL + IM) = 24.9 k-ft/ft

RF = [C – (γ_{DC})(DC) ± (γ_{P})(P)]/((γ_{LL})(LL + IM)] = (73.3 k-ft/ft – 15.5 k-ft/ft – 11.1 k-ft/ft)/24.9 k-ft/ft = **1.88**

Wall Shear:

C= 15.9 k/ft
(γ_{DC})(DC) = 2.0 k/ft
(γ_{P})(P) = 2.8 k/ft

$(\gamma_{LL})(LL + IM) = 3.3$ k/ft

RF = [C – (γ_{DC})(DC) ± (γ_P)(P)]/((γ_{LL})(LL + IM)] = (15.9 k/ft – 2.0 k/ft – 2.8 k/ft)/3.3 k/ft = 3.36

Therefore wall flex controls RF: 1.88

Rating in Tons (AASHTO 6A4.4.4) = RT = RFxW, for 5 Axle W=38.0

RT = (1.88)(38.0) = 71.4 Tons

OPERATING:

Slab + Flexural:

C = 158.8 k-ft/ft
(γ_{DC})(DC) = 29.8 k-ft/ft
(γ_P)(P) = 16.7 k-ft/ft
(γ_{LL})(LL + IM) = 40.5 k-ft/ft

RF = [C – (γ_{DC})(DC) ± (γ_P)(P)]/((γ_{LL})(LL + IM)] = (158.8 k-ft/ft – 29.8 k-ft/ft – 16.7 k-ft/ft)/40.5 k-ft/ft = 2.77

Slab - Flexural:

C= 158.8 k-ft/ft
(γ_{DC})(DC) = 15.5 k-ft/ft
(γ_P)(P) = 11.1 k-ft/ft
(γ_{LL})(LL + IM) = 19.2 k-ft/ft

RF = [C – (γ_{DC})(DC) ± (γ_P)(P)]/((γ_{LL})(LL + IM)] = (158.8 k-ft/ft – 15.5 k-ft/ft – 11.1 k-ft/ft)/19.2 k-ft/ft = 6.89

Slab Shear:

C= 32.6 k/ft
(γ_{DC})(DC) = 5.5 k/ft
(γ_P)(P) = 3.4 k/ft
(γ_{LL})(LL + IM) = 8.5 k/ft

RF = [C – (γ_{DC})(DC) ± (γ_P)(P)]/((γ_{LL})(LL + IM)] = (32.6 k/ft – 5.5 k/ft – 3.4 k/ft)/8.5 k/ft = 2.79

Wall Flexural:

C = 73.3 k-ft/ft
(γ_{DC})(DC) = 15.5 k-ft/ft
(γ_P)(P) = 11.1 k-ft/ft
(γ_{LL})(LL + IM) = 19.2 k-ft/ft

RF = [C – (γ_{DC})(DC) ± (γ_P)(P)]/((γ_{LL})(LL + IM)] = (73.3 k-ft/ft – 15.5 k-ft/ft – 11.1 k-ft/ft)/19.2 k-ft/ft = **2.43**

Wall Shear:

C= 15.9 k/ft
$(\gamma_{DC})(DC)$ = 2.0 k/ft
$(\gamma_P)(P)$ = 2.8 k/ft
$(\gamma_{LL})(LL + IM)$ = 2.6 k/ft

RF = $[C - (\gamma_{DC})(DC) \pm (\gamma_P)(P)]/((\gamma_{LL})(LL + IM)]$ = (15.9 k/ft – 2.0 k/ft – 2.8 k/ft)/2.6 k/ft = 4.27

Therefore wall flex controls RF: 2.43

Rating in Tons (AASHTO 6A4.4.4) = RT = RFxW, for 5 Axle W=38.0

RT = (2.43)(38.0) = 92.3 Tons

Rating Summary:

LRFR LOAD RATING FACTORS							
LOADING LEVELS	TRUCK						
	H-20	HL-93	3S2	6 AXLE	3A. STR.	4A. STR.	5A. SEMI
TONNAGE	20	36	36	66	30	34.5	38
INVENTORY	29.0	41.8	54.4	96.4	49.2	68.3	71.4
POSTING							
OPERATING	37.6	54.4	70.2	125.4	63.9	88.7	92.3
COMMENTS:							

APPENDIX A

APPENDIX A:

Computer Model Output

Wing Wall #1:

Joint Reactions:		
Ultimate Loads	RA	2.094k
Ultimate Loads	RB	1.812k
Service Loads	RA	1.435k
Service Loads	RB	1.248k
Member Forces:		
Ultimate Loads	M	2.5k-ft
Ultimate Loads	V	2.1k
Service Loads	M	1.7k-ft
Service Loads	V	1.5k

Wing Wall #2:

Joint Reactions:		
Ultimate Loads	RA	2.094k
Ultimate Loads	RB	1.800k
Service Loads	RA	1.435k
Service Loads	RB	1.239k
Member Forces:		
Ultimate Loads	M	2.5k-ft
Ultimate Loads	V	2.1k
Service Loads	M	1.7k-ft
Service Loads	V	1.5k

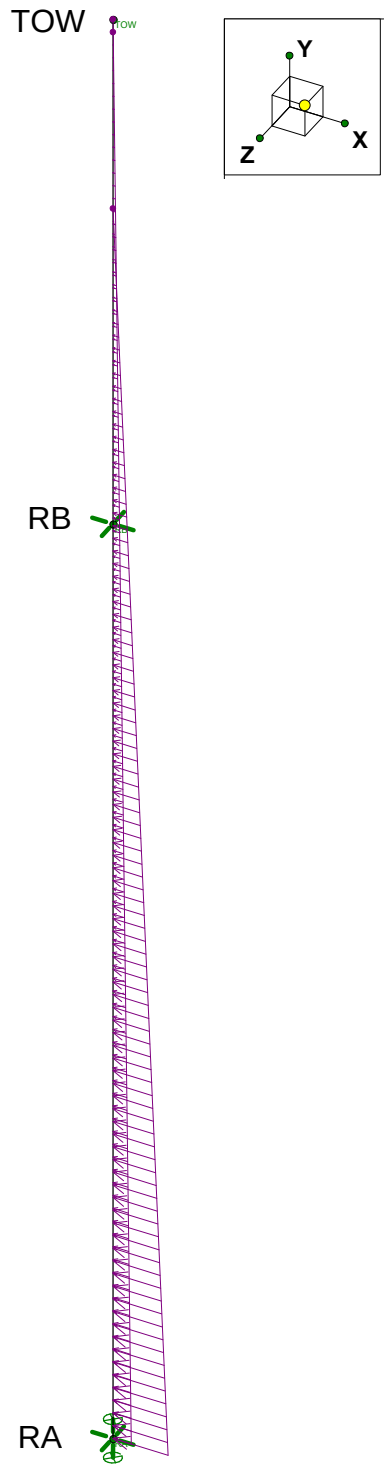

APPENDIX A (Continued):

Wing Wall #3:

Joint Reactions:		
Ultimate Loads	RA	2.094k
Ultimate Loads	RB	1.788k
Service Loads	RA	1.435k
Service Loads	RB	1.230k
Member Forces:		
Ultimate Loads	M	2.5k-ft
Ultimate Loads	V	2.1k
Service Loads	M	1.7k-ft
Service Loads	V	1.5k

Wing Wall #4:

Joint Reactions:		
Ultimate Loads	RA	2.094k
Ultimate Loads	RB	1.836k
Service Loads	RA	1.435k
Service Loads	RB	1.266k
Member Forces:		
Ultimate Loads	M	2.5k-ft
Ultimate Loads	V	2.1k
Service Loads	M	1.7k-ft
Service Loads	V	1.5k

APPENDIX B

HL-93 Strength Output

Basic Load Cases

	BLC Description	Category	X Gravity	Y Gravity	Z Gravity	Joint	Point	Distribut...	Area(Me...	Surface(...
1	DL	None		-1						
2	Earth Vertical	None						1		
3	Earth Horizontal	None						2		
4	Earth Horizontal w/ Hydro	None						2		
5	Surcharge	None						2		
6	Lane Load	None						1		
16	HL-93 Truck	None								
17	HL-93 Tandem	None								
18	H-20	None								
19	3S2	None								
20	6 Axle Trailer	None								
21	3 Axle Straight	None								
22	4 Axle Straight	None								
23	5 Axle Semi	None								

Load Combinations

	Description	Solve	PD...	SR...	BLC	Fact...	BLC	Fact...	BLC	Fact...	BLC	Fact...	BLC	Fact...	BLC	Fact...	BLC	Fact...	BLC	Fact...
1	Strength 1 - Truck (max) ...	Yes	Y		1	1.25	2	1.35	3	1.5	5	1.5	6	2.1	M1	1.365				
2	Strength 1 - Truck (min) ...	Yes	Y		1	1.25	2	1.35	3	.9	5	.75	6	2.1	M1	1.365				
3	Strength 1 - Tandem (ma...	Yes	Y		1	1.25	2	1.35	3	1.5	5	1.5	6	2.1	M2	1.365				
4	Strength 1 - Tandem (min...	Yes	Y		1	1.25	2	1.35	3	.9	5	.75	6	2.1	M2	1.365				
5																				
6	Strength 1 - Truck (max) ...	Yes	Y		1	1.25	2	1.35	4	1.5	5	1.5	6	2.1	M1	1.365				
7	Strength 1 - Truck (min) ...	Yes	Y		1	1.25	2	1.35	4	.9	5	.75	6	2.1	M1	1.365				
8	Strength 1 - Tandem (ma...	Yes	Y		1	1.25	2	1.35	4	1.5	5	1.5	6	2.1	M2	1.365				
9	Strength 1 - Tandem (min...	Yes	Y		1	1.25	2	1.35	4	.9	5	.75	6	2.1	M2	1.365				
10																				
11	Service 1 - Truck wo hydro		Y		1	1	2	1	3	1	5	1	6	1.2	M1	.78				
12	Service 1 - Tandem wo h...		Y		1	1	2	1	3	1	5	1	6	1.2	M2	.78				
13																				
14	Service 1 - Truck w hydro		Y		1	1	2	1	4	1	5	1	6	1.2	M1	.78				
15	Service 1 - Tandem w hy...		Y		1	1	2	1	4	1	5	1	6	1.2	M2	.78				
16																				
17	HL-93 Truck		Y		M1	1														
18	HL-93 Tandem		Y		M2	1														
19	H-20		Y		M3	1														
20	3S2		Y		M4	1														
21	6 Axle Trailer		Y		M5	1														
22	3 Axle Straight		Y		M6	1														
23	4 Axle Straight		Y		M7	1														
24	5 Axle Semi		Y		M8	1														
25			Y																	
26	DL		Y		1	1														
27	EL		Y		2	1	4	1												
28	LL - Truck		Y		M1	.5	6	1												
29	LL - Tandem		Y		M2	.5	6	1												

Member Distributed Loads (BLC 2 : Earth Vertical)

	Member Label	Direction	Start Magnitude[k/ft,d...	End Magnitude[k/ft,d...	Start Location[ft,%]	End Location[ft,%]
1	M3	Y	-.857	-.857	0	0

Member Distributed Loads (BLC 3 : Earth Horizontal)

Member Label	Direction	Start Magnitude[k/ft,d...	End Magnitude[k/ft,d...	Start Location[ft,%]	End Location[ft,%]

Member Distributed Loads (BLC 3 : Earth Horizontal) (Continued)

	Member Label	Direction	Start Magnitude[k/ft,d..	End Magnitude[k/ft,d...	Start Location[ft,%]	End Location[ft,%]
1	M1	X	2.441	.351	0	0
2	M2	X	-.351	-2.441	0	0

Member Distributed Loads (BLC 4 : Earth Horizontal w/ Hydro)

	Member Label	Direction	Start Magnitude[k/ft,d..	End Magnitude[k/ft,d...	Start Location[ft,%]	End Location[ft,%]
1	M2	X	-.351	-3.781	0	0
2	M1	X	3.781	.351	0	0

Member Distributed Loads (BLC 5 : Surcharge)

	Member Label	Direction	Start Magnitude[k/ft,d..	End Magnitude[k/ft,d...	Start Location[ft,%]	End Location[ft,%]
1	M1	X	.771	.771	0	0
2	M2	X	-.771	-.771	0	0

Member Distributed Loads (BLC 6 : Lane Load)

	Member Label	Direction	Start Magnitude[k/ft,d..	End Magnitude[k/ft,d...	Start Location[ft,%]	End Location[ft,%]
1	M3	Y	-.269	-.269	0	0

Moving Loads

	Tag	Pattern	Increm...	Both W...	1st Joint	2nd Jo...	3rd Joint	4th Joint	5th Joint	6th Joint	7th Joint	8th Joint	9th Joint	10th J...
1	M1	HL-93TRUCK	.5	Yes	N2	N3								
2	M2	HL-93TANDEM	.5	Yes	N2	N3								
3	M3	H20	.5	Yes	N2	N3								
4	M4	TYPE3-S2	.5	Yes	N2	N3								
5	M5	6AXLETRAILER	.5	Yes	N2	N3								
6	M6	3A_STR	.5	Yes	N2	N3								
7	M7	4A_STR	.5	Yes	N2	N3								
8	M8	5A_SEMI	.5	Yes	N2	N3								

Moving Load Patterns

Pattern Label	Load (k)	Direction	Distance (ft)
HL-93TRUCK	-8	Y	0
	-32	Y	14
	-32	Y	28
HL-93TANDEM	-25	Y	0
	-25	Y	4
H20	-8	V	0
	-32	V	14
TYPE3-S2	-10	V	0
	-15.5	V	11
	-15.5	V	4
	-15.5	V	22
	-15.5	V	4
6AXLETRAILER	-12	Y	0
	-24	Y	11
	-24	Y	15.67
	-24	Y	46.67
	-24	Y	50.67
	-24	Y	54.67

Moving Load Patterns

Pattern Label	Load (k)	Direction	Distance (ft)
3A_STR	-12	Y	0
	-24	Y	15
	-24	Y	19
4A_STR	-12	Y	0
	-19	Y	15
	-19	Y	19
	-19	Y	23
5A_SEMI	-8	Y	0
	-17	Y	11
	-17	Y	15
	-17	Y	31
	-17	Y	35

Envelope Member Section Forces

	Member	Sec		Axial[k]	LC	y Shear[k]	LC	z Shear[k]	LC	Torque[k-ft]	LC	y-y Momen...	LC	z-z Momen...	LC
1	M1	1	max	121.339	4	-1.629	8	0	1	0	1	0	1	0	1
2			min	57.268	2	-30.58	4	0	1	0	1	0	1	0	1
3		2	max	119.893	4	-13.354	8	0	1	0	1	0	1	62.677	4
4			min	55.822	2	-35.395	4	0	1	0	1	0	1	14.588	8
5		3	max	118.447	4	-20.555	2	0	1	0	1	0	1	133.637	4
6			min	54.376	2	-41.404	8	0	1	0	1	0	1	49.092	8
7		4	max	117.001	4	-23.588	2	0	1	0	1	0	1	211.191	4
8			min	52.93	2	-48.252	8	0	1	0	1	0	1	98.889	8
9		5	max	115.555	4	-25.729	2	0	1	0	1	0	1	301.642	8
10			min	51.484	2	-52.662	8	0	1	0	1	0	1	151.365	2
11	M2	1	max	115.555	4	-25.729	2	0	1	0	1	0	1	-151.365	2
12			min	51.484	2	-52.662	8	0	1	0	1	0	1	-301.642	8
13		2	max	117.001	4	-23.588	2	0	1	0	1	0	1	-98.889	8
14			min	52.93	2	-48.252	8	0	1	0	1	0	1	-211.191	4
15		3	max	118.447	4	-20.555	2	0	1	0	1	0	1	-49.092	8
16			min	54.376	2	-41.404	8	0	1	0	1	0	1	-133.637	4
17		4	max	119.893	4	-13.354	8	0	1	0	1	0	1	-14.588	8
18			min	55.822	2	-35.395	4	0	1	0	1	0	1	-62.677	4
19		5	max	121.339	4	-1.629	8	0	1	0	1	0	1	0	1
20			min	57.268	2	-30.58	4	0	1	0	1	0	1	0	1
21	M3	1	max	52.666	8	114.51	4	0	1	0	1	0	1	301.642	8
22			min	25.73	2	51.484	8	0	1	0	1	0	1	151.365	2
23		2	max	52.666	8	72.195	4	0	1	0	1	0	1	-159.072	6
24			min	25.73	2	13.238	8	0	1	0	1	0	1	-431.926	4
25		3	max	52.666	8	28.993	8	0	1	0	1	0	1	-265.384	6
26			min	25.73	2	-30.019	8	0	1	0	1	0	1	-628.029	4
27		4	max	52.666	8	-13.238	8	0	1	0	1	0	1	-159.072	6
28			min	25.73	2	-72.195	4	0	1	0	1	0	1	-431.926	4
29		5	max	52.666	8	-51.484	8	0	1	0	1	0	1	301.642	8
30			min	25.73	2	-114.51	4	0	1	0	1	0	1	151.365	2

Envelope Member Section Deflections

	Member	Sec		x [in]	LC	y [in]	LC	z [in]	LC	x Rotate [r...	LC	(n) L/y Ratio	LC	(n) L/z Ratio	LC
1	M1	1	max	0	1	0	1	0	1	0	1	NC	1	NC	1
2			min	0	1	0	1	0	1	0	1	NC	1	NC	1
3		2	max	0	2	.133	4	0	1	0	1	880.24	4	NC	1
4			min	-.001	4	.038	6	0	1	0	1	1677.829	6	NC	1

Envelope Member Section Deflections (Continued)

	Member	Sec		x [in]	LC	y [in]	LC	z [in]	LC	x Rotate [r...	LC	(n) L/y Ratio	LC	(n) L/z Ratio	LC
5		3	max	-.001	2	.226	4	0	1	0	1	549.88	4	NC	1
6			min	-.002	4	.056	8	0	1	0	1	816.217	8	NC	1
7		4	max	-.002	2	.24	4	0	1	0	1	637.154	4	NC	1
8			min	-.004	4	.017	8	0	1	0	1	5454.139	8	NC	1
9		5	max	-.002	2	.134	4	0	1	0	1	NC	4	NC	1
10			min	-.005	4	-.138	8	0	1	0	1	660.995	8	NC	1
11	M2	1	max	.005	4	.138	8	0	1	0	1	660.995	8	NC	1
12			min	.002	2	-.134	4	0	1	0	1	NC	4	NC	1
13		2	max	.004	4	-.017	8	0	1	0	1	5454.139	8	NC	1
14			min	.002	2	-.24	4	0	1	0	1	637.154	4	NC	1
15		3	max	.002	4	-.056	8	0	1	0	1	816.217	8	NC	1
16			min	.001	2	-.226	4	0	1	0	1	549.88	4	NC	1
17		4	max	.001	4	-.038	6	0	1	0	1	1677.829	6	NC	1
18			min	0	2	-.133	4	0	1	0	1	880.24	4	NC	1
19		5	max	0	1	0	1	0	1	0	1	NC	1	NC	1
20			min	0	1	0	1	0	1	0	1	NC	1	NC	1
21	M3	1	max	.138	8	-.002	2	0	1	0	1	NC	2	NC	1
22			min	-.134	4	-.005	4	0	1	0	1	NC	4	NC	1
23		2	max	.137	8	-.548	6	0	1	0	1	725.202	6	NC	1
24			min	-.134	4	-1.205	4	0	1	0	1	329.798	4	NC	1
25		3	max	.135	8	-.803	6	0	1	0	1	494.435	6	NC	1
26			min	-.135	8	-1.764	4	0	1	0	1	224.935	4	NC	1
27		4	max	.134	4	-.548	6	0	1	0	1	725.202	6	NC	1
28			min	-.137	8	-1.205	4	0	1	0	1	329.798	4	NC	1
29		5	max	.134	4	-.002	2	0	1	0	1	NC	2	NC	1
30			min	-.138	8	-.005	4	0	1	0	1	NC	4	NC	1

HL-93 Service Output

Basic Load Cases

	BLC Description	Category	X Gravity	Y Gravity	Z Gravity	Joint	Point	Distribut...	Area(Me...	Surface(...
1	DL	None		-1						
2	Earth Vertical	None						1		
3	Earth Horizontal	None						2		
4	Earth Horizontal w/ Hydro	None						2		
5	Surcharge	None						2		
6	Lane Load	None						1		
16	HL-93 Truck	None								
17	HL-93 Tandem	None								
18	H-20	None								
19	3S2	None								
20	6 Axle Trailer	None								
21	3 Axle Straight	None								
22	4 Axle Straight	None								
23	5 Axle Semi	None								

Load Combinations

	Description	Solve	PD...	SR...	BLC	Fact...	BLC	Fact...	BLC	Fact...	BLC	Fact...	BLC	Fact...	BLC	Fact...	BLC	Fact...	BLC	Fact...
1	Strength 1 - Truck (max) ...		Y		1	1.25	2	1.35	3	1.5	5	1.5	6	2.1	M1	1.365				
2	Strength 1 - Truck (min) ...		Y		1	1.25	2	1.35	3	.9	5	.75	6	2.1	M1	1.365				
3	Strength 1 - Tandem (ma...		Y		1	1.25	2	1.35	3	1.5	5	1.5	6	2.1	M2	1.365				
4	Strength 1 - Tandem (min...		Y		1	1.25	2	1.35	3	.9	5	.75	6	2.1	M2	1.365				
5																				
6	Strength 1 - Truck (max) ...		Y		1	1.25	2	1.35	4	1.5	5	1.5	6	2.1	M1	1.365				
7	Strength 1 - Truck (min) ...		Y		1	1.25	2	1.35	4	.9	5	.75	6	2.1	M1	1.365				
8	Strength 1 - Tandem (ma...		Y		1	1.25	2	1.35	4	1.5	5	1.5	6	2.1	M2	1.365				
9	Strength 1 - Tandem (min...		Y		1	1.25	2	1.35	4	.9	5	.75	6	2.1	M2	1.365				
10																				
11	Service 1 - Truck wo hydro	Yes	Y		1	1	2	1	3	1	5	1	6	1.2	M1	.78				
12	Service 1 - Tandem wo h...	Yes	Y		1	1	2	1	3	1	5	1	6	1.2	M2	.78				
13																				
14	Service 1 - Truck w hydro	Yes	Y		1	1	2	1	4	1	5	1	6	1.2	M1	.78				
15	Service 1 - Tandem w hy...	Yes	Y		1	1	2	1	4	1	5	1	6	1.2	M2	.78				
16																				
17	HL-93 Truck		Y		M1	1														
18	HL-93 Tandem		Y		M2	1														
19	H-20		Y		M3	1														
20	3S2		Y		M4	1														
21	6 Axle Trailer		Y		M5	1														
22	3 Axle Straight		Y		M6	1														
23	4 Axle Straight		Y		M7	1														
24	5 Axle Semi		Y		M8	1														
25			Y																	
26	DL		Y		1	1														
27	EL		Y		2	1	4	1												
28	LL - Truck		Y		M1	.5	6	1												
29	LL - Tandem		Y		M2	.5	6	1												

Member Distributed Loads (BLC 2 : Earth Vertical)

	Member Label	Direction	Start Magnitude[k/ft,d...	End Magnitude[k/ft,d...	Start Location[ft,%]	End Location[ft,%]
1	M3	Y	-.857	-.857	0	0

Member Distributed Loads (BLC 3 : Earth Horizontal)

Member Label	Direction	Start Magnitude[k/ft,d...	End Magnitude[k/ft,d...	Start Location[ft,%]	End Location[ft,%]

Member Distributed Loads (BLC 3 : Earth Horizontal) (Continued)

	Member Label	Direction	Start Magnitude[k/ft,d..	End Magnitude[k/ft,d...	Start Location[ft,%]	End Location[ft,%]
1	M1	X	2.441	.351	0	0
2	M2	X	-.351	-2.441	0	0

Member Distributed Loads (BLC 4 : Earth Horizontal w/ Hydro)

	Member Label	Direction	Start Magnitude[k/ft,d..	End Magnitude[k/ft,d...	Start Location[ft,%]	End Location[ft,%]
1	M2	X	-.351	-3.781	0	0
2	M1	X	3.781	.351	0	0

Member Distributed Loads (BLC 5 : Surcharge)

	Member Label	Direction	Start Magnitude[k/ft,d..	End Magnitude[k/ft,d...	Start Location[ft,%]	End Location[ft,%]
1	M1	X	.771	.771	0	0
2	M2	X	-.771	-.771	0	0

Member Distributed Loads (BLC 6 : Lane Load)

	Member Label	Direction	Start Magnitude[k/ft,d..	End Magnitude[k/ft,d...	Start Location[ft,%]	End Location[ft,%]
1	M3	Y	-.269	-.269	0	0

Moving Loads

	Tag	Pattern	Increm...	Both W...	1st Joint	2nd Jo...	3rd Joint	4th Joint	5th Joint	6th Joint	7th Joint	8th Joint	9th Joint	10th J...
1	M1	HL-93TRUCK	.5	Yes	N2	N3								
2	M2	HL-93TANDEM	.5	Yes	N2	N3								
3	M3	H20	.5	Yes	N2	N3								
4	M4	TYPE3-S2	.5	Yes	N2	N3								
5	M5	6AXLETRAILER	.5	Yes	N2	N3								
6	M6	3A_STR	.5	Yes	N2	N3								
7	M7	4A_STR	.5	Yes	N2	N3								
8	M8	5A_SEMI	.5	Yes	N2	N3								

Moving Load Patterns

Pattern Label	Load (k)	Direction	Distance (ft)
HL-93TRUCK	-8	Y	0
	-32	Y	14
	-32	Y	28
HL-93TANDEM	-25	Y	0
	-25	Y	4
H20	-8	V	0
	-32	V	14
TYPE3-S2	-10	V	0
	-15.5	V	11
	-15.5	V	4
	-15.5	V	22
	-15.5	V	4
6AXLETRAILER	-12	Y	0
	-24	Y	11
	-24	Y	15.67
	-24	Y	46.67
	-24	Y	50.67
	-24	Y	54.67

Moving Load Patterns

Pattern Label	Load (k)	Direction	Distance (ft)
3A_STR	-12	Y	0
	-24	Y	15
	-24	Y	19
4A_STR	-12	Y	0
	-19	Y	15
	-19	Y	19
	-19	Y	23
5A_SEMI	-8	Y	0
	-17	Y	11
	-17	Y	15
	-17	Y	31
	-17	Y	35

Envelope Member Section Forces

	Member	Sec		Axial[k]	LC	y Shear[k]	LC	z Shear[k]	LC	Torque[k-ft]	LC	y-y Momen...	LC	z-z Momen...	LC
1	M1	1	max	79.173	12	-2.427	15	0	11	0	11	0	11	0	11
2			min	42.553	11	-16.25	12	0	11	0	11	0	11	0	11
3		2	max	78.016	12	-10.243	15	0	11	0	11	0	11	36.266	12
4			min	41.396	11	-21.844	12	0	11	0	11	0	11	12.266	15
5		3	max	76.859	12	-15.726	12	0	11	0	11	0	11	82.197	12
6			min	40.239	11	-27.156	15	0	11	0	11	0	11	37.81	15
7		4	max	75.702	12	-19.339	12	0	11	0	11	0	11	135.916	12
8			min	39.082	11	-31.722	15	0	11	0	11	0	11	73.549	15
9		5	max	74.546	12	-21.961	12	0	11	0	11	0	11	197.708	15
10			min	37.925	11	-34.661	15	0	11	0	11	0	11	114.24	12
11	M2	1	max	74.546	12	-21.961	12	0	11	0	11	0	11	-114.24	12
12			min	37.925	11	-34.661	15	0	11	0	11	0	11	-197.708	15
13		2	max	75.702	12	-19.339	12	0	11	0	11	0	11	-73.549	15
14			min	39.082	11	-31.722	15	0	11	0	11	0	11	-135.916	12
15		3	max	76.859	12	-15.726	12	0	11	0	11	0	11	-37.81	15
16			min	40.239	11	-27.156	15	0	11	0	11	0	11	-82.197	12
17		4	max	78.016	12	-10.243	15	0	11	0	11	0	11	-12.266	15
18			min	41.396	11	-21.844	12	0	11	0	11	0	11	-36.266	12
19		5	max	79.173	12	-2.427	15	0	11	0	11	0	11	0	11
20			min	42.553	11	-16.25	12	0	11	0	11	0	11	0	11
21	M3	1	max	34.663	15	73.951	12	0	11	0	11	0	11	197.708	15
22			min	21.962	11	37.925	15	0	11	0	11	0	11	114.24	12
23		2	max	34.663	15	45.523	12	0	11	0	11	0	11	-118.201	14
24			min	21.962	11	11.836	15	0	11	0	11	0	11	-271.565	12
25		3	max	34.663	15	16.56	15	0	11	0	11	0	11	-196.482	14
26			min	21.962	11	-17.148	15	0	11	0	11	0	11	-401.303	12
27		4	max	34.663	15	-11.836	15	0	11	0	11	0	11	-118.201	14
28			min	21.962	11	-45.523	12	0	11	0	11	0	11	-271.565	12
29		5	max	34.663	15	-37.925	15	0	11	0	11	0	11	197.708	15
30			min	21.962	11	-73.951	12	0	11	0	11	0	11	114.24	12

Envelope Member Section Deflections

	Member	Sec		x [in]	LC	y [in]	LC	z [in]	LC	x Rotate [r...	LC	(n) L/y Ratio	LC	(n) L/z Ratio	LC
1	M1	1	max	0	11	0	11	0	11	0	11	NC	11	NC	11
2			min	0	11	0	11	0	11	0	11	NC	11	NC	11
3		2	max	0	11	.08	12	0	11	0	11	1420.696	12	NC	11
4			min	0	12	.03	14	0	11	0	11	2317.282	14	NC	11

Envelope Member Section Deflections (Continued)

	Member	Sec		x [in]	LC	y [in]	LC	z [in]	LC	x Rotate [r...	LC	(n) L/y Ratio	LC	(n) L/z Ratio	LC
5		3	max	0	11	.138	12	0	11	0	11	875.141	12	NC	11
6			min	-.002	12	.046	15	0	11	0	11	1172.801	15	NC	11
7		4	max	-.001	11	.146	12	0	11	0	11	995.315	12	NC	11
8			min	-.002	12	.023	15	0	11	0	11	1163.237	15	NC	11
9		5	max	-.002	11	.074	12	0	11	0	11	NC	12	NC	11
10			min	-.003	12	-.077	15	0	11	0	11	NC	15	NC	11
11	M2	1	max	.003	12	.077	15	0	11	0	11	NC	15	NC	11
12			min	.002	11	-.074	12	0	11	0	11	NC	12	NC	11
13		2	max	.002	12	-.023	15	0	11	0	11	1163.237	15	NC	11
14			min	.001	11	-.146	12	0	11	0	11	995.315	12	NC	11
15		3	max	.002	12	-.046	15	0	11	0	11	1172.801	15	NC	11
16			min	0	11	-.138	12	0	11	0	11	875.141	12	NC	11
17		4	max	0	12	-.03	14	0	11	0	11	2317.282	14	NC	11
18			min	0	11	-.08	12	0	11	0	11	1420.696	12	NC	11
19		5	max	0	11	0	11	0	11	0	11	NC	11	NC	11
20			min	0	11	0	11	0	11	0	11	NC	11	NC	11
21	M3	1	max	.077	15	-.002	11	0	11	0	11	NC	11	NC	11
22			min	-.074	12	-.003	12	0	11	0	11	NC	12	NC	11
23		2	max	.077	15	-.407	14	0	11	0	11	977.056	14	NC	11
24			min	-.075	12	-.774	12	0	11	0	11	513.017	12	NC	11
25		3	max	.076	15	-.596	14	0	11	0	11	666.603	14	NC	11
26			min	-.076	15	-1.135	12	0	11	0	11	349.67	12	NC	11
27		4	max	.075	12	-.407	14	0	11	0	11	977.056	14	NC	11
28			min	-.077	15	-.774	12	0	11	0	11	513.017	12	NC	11
29		5	max	.074	12	-.002	11	0	11	0	11	NC	11	NC	11
30			min	-.077	15	-.003	12	0	11	0	11	NC	12	NC	11

APPENDIX C

DL Load Rating Output

Basic Load Cases

	BLC Description	Category	X Gravity	Y Gravity	Z Gravity	Joint	Point	Distribut...	Area(Me...	Surface(...
1	DL	None		-1						
2	Earth Vertical	None						1		
3	Earth Horizontal	None						2		
4	Earth Horizontal w/ Hydro	None						2		
5	Surcharge	None						2		
6	Lane Load	None						1		
16	HL-93 Truck	None								
17	HL-93 Tandem	None								
18	H-20	None								
19	3S2	None								
20	6 Axle Trailer	None								
21	3 Axle Straight	None								
22	4 Axle Straight	None								
23	5 Axle Semi	None								

Load Combinations

	Description	Solve	PD...	SR...	BLC	Fact...	BLC	Fact...	BLC	Fact...	BLC	Fact...	BLC	Fact...	BLC	Fact...	BLC	Fact...	BLC	Fact...
1	Strength 1 - Truck (max) ...		Y		1	1.25	2	1.35	3	1.5	5	1.5	6	2.1	M1	1.365				
2	Strength 1 - Truck (min) ...		Y		1	1.25	2	1.35	3	.9	5	.75	6	2.1	M1	1.365				
3	Strength 1 - Tandem (ma...		Y		1	1.25	2	1.35	3	1.5	5	1.5	6	2.1	M2	1.365				
4	Strength 1 - Tandem (min...		Y		1	1.25	2	1.35	3	.9	5	.75	6	2.1	M2	1.365				
5																				
6	Strength 1 - Truck (max) ...		Y		1	1.25	2	1.35	4	1.5	5	1.5	6	2.1	M1	1.365				
7	Strength 1 - Truck (min) ...		Y		1	1.25	2	1.35	4	.9	5	.75	6	2.1	M1	1.365				
8	Strength 1 - Tandem (ma...		Y		1	1.25	2	1.35	4	1.5	5	1.5	6	2.1	M2	1.365				
9	Strength 1 - Tandem (min...		Y		1	1.25	2	1.35	4	.9	5	.75	6	2.1	M2	1.365				
10																				
11	Service 1 - Truck wo hydro		Y		1	1	2	1	3	1	5	1	6	1.2	M1	.78				
12	Service 1 - Tandem wo h...		Y		1	1	2	1	3	1	5	1	6	1.2	M2	.78				
13																				
14	Service 1 - Truck w hydro		Y		1	1	2	1	4	1	5	1	6	1.2	M1	.78				
15	Service 1 - Tandem w hy...		Y		1	1	2	1	4	1	5	1	6	1.2	M2	.78				
16																				
17	HL-93 Truck		Y		M1	.78	6	1.2												
18	HL-93 Tandem		Y		M2	.78	6	1.2												
19	H-20		Y		M3	.78	6	1.2												
20	3S2		Y		M4	.78	6	1.2												
21	6 Axle Trailer		Y		M5	.78	6	1.2												
22	3 Axle Straight		Y		M6	.78	6	1.2												
23	4 Axle Straight		Y		M7	.78	6	1.2												
24	5 Axle Semi		Y		M8	.78	6	1.2												
25																				
26	DL		Y		1	1.25														
27	EL		Y		2	1	4	1												
28	LL - Truck		Y		M1	.5	6	1												
29	LL - Tandem		Y		M2	.5	6	1												

Member Distributed Loads (BLC 2 : Earth Vertical)

	Member Label	Direction	Start Magnitude[k/ft,d...	End Magnitude[k/ft,d...	Start Location[ft,%]	End Location[ft,%]
1	M3	Y	-.857	-.857	0	0

Member Distributed Loads (BLC 3 : Earth Horizontal)

Member Label	Direction	Start Magnitude[k/ft,d...	End Magnitude[k/ft,d...	Start Location[ft,%]	End Location[ft,%]

Member Distributed Loads (BLC 3 : Earth Horizontal) (Continued)

	Member Label	Direction	Start Magnitude[k/ft,d..	End Magnitude[k/ft,d...	Start Location[ft,%]	End Location[ft,%]
1	M1	X	2.441	.351	0	0
2	M2	X	-.351	-2.441	0	0

Member Distributed Loads (BLC 4 : Earth Horizontal w/ Hydro)

	Member Label	Direction	Start Magnitude[k/ft,d..	End Magnitude[k/ft,d...	Start Location[ft,%]	End Location[ft,%]
1	M2	X	-.351	-3.781	0	0
2	M1	X	3.781	.351	0	0

Member Distributed Loads (BLC 5 : Surcharge)

	Member Label	Direction	Start Magnitude[k/ft,d..	End Magnitude[k/ft,d...	Start Location[ft,%]	End Location[ft,%]
1	M1	X	.771	.771	0	0
2	M2	X	-.771	-.771	0	0

Member Distributed Loads (BLC 6 : Lane Load)

	Member Label	Direction	Start Magnitude[k/ft,d..	End Magnitude[k/ft,d...	Start Location[ft,%]	End Location[ft,%]
1	M3	Y	-.269	-.269	0	0

Moving Loads

	Tag	Pattern	Increm...	Both W...	1st Joint	2nd Jo...	3rd Joint	4th Joint	5th Joint	6th Joint	7th Joint	8th Joint	9th Joint	10th J...
1	M1	HL-93TRUCK	.5	Yes	N2	N3								
2	M2	HL-93TANDEM	.5	Yes	N2	N3								
3	M3	H20	.5	Yes	N2	N3								
4	M4	TYPE3-S2	.5	Yes	N2	N3								
5	M5	6AXLETRAILER	.5	Yes	N2	N3								
6	M6	3A_STR	.5	Yes	N2	N3								
7	M7	4A_STR	.5	Yes	N2	N3								
8	M8	5A_SEMI	.5	Yes	N2	N3								

Moving Load Patterns

Pattern Label	Load (k)	Direction	Distance (ft)
HL-93TRUCK	-8	Y	0
	-32	Y	14
	-32	Y	28
HL-93TANDEM	-25	Y	0
	-25	Y	4
H20	-8	V	0
	-32	V	14
TYPE3-S2	-10	V	0
	-15.5	V	11
	-15.5	V	4
	-15.5	V	22
	-15.5	V	4
6AXLETRAILER	-12	Y	0
	-24	Y	11
	-24	Y	15.67
	-24	Y	46.67
	-24	Y	50.67
	-24	Y	54.67

Moving Load Patterns

Pattern Label	Load (k)	Direction	Distance (ft)
3A_STR	-12	Y	0
	-24	Y	15
	-24	Y	19
4A_STR	-12	Y	0
	-19	Y	15
	-19	Y	19
	-19	Y	23
5A_SEMI	-8	Y	0
	-17	Y	11
	-17	Y	15
	-17	Y	31
	-17	Y	35

Member Section Forces

	LC	Member Label	Sec	Axial[k]	y Shear[k]	z Shear[k]	Torque[k-ft]	y-y Moment[k-...	z-z Moment[k-...
1	26	M1	1	28.858	-8.584	0	0	0	0
2			2	27.411	-8.584	0	0	0	16.273
3			3	25.965	-8.584	0	0	0	32.546
4			4	24.519	-8.584	0	0	0	48.819
5			5	23.073	-8.584	0	0	0	65.092
6	26	M2	1	23.073	-8.584	0	0	0	-65.092
7			2	24.519	-8.584	0	0	0	-48.819
8			3	25.965	-8.584	0	0	0	-32.546
9			4	27.411	-8.584	0	0	0	-16.273
10			5	28.858	-8.584	0	0	0	0
11	26	M3	1	8.584	23.073	0	0	0	65.092
12			2	8.584	11.537	0	0	0	-77.675
13			3	8.584	0	0	0	0	-125.264
14			4	8.584	-11.537	0	0	0	-77.675
15			5	8.584	-23.073	0	0	0	65.092

Member Section Deflections

	LC	Member Label	Sec	x [in]	y [in]	z [in]	x Rotate[rad]	(n) L/y Ratio	(n) L/z Ratio
1	26	M1	1	0	0	0	0	NC	NC
2			2	0	.027	0	0	3340.462	NC
3			3	0	.043	0	0	2087.789	NC
4			4	0	.038	0	0	2386.044	NC
5			5	-.001	0	0	0	NC	NC
6	26	M2	1	.001	0	0	0	NC	NC
7			2	0	-.038	0	0	2386.044	NC
8			3	0	-.043	0	0	2087.789	NC
9			4	0	-.027	0	0	3340.462	NC
10			5	0	0	0	0	NC	NC
11	26	M3	1	0	-.001	0	0	NC	NC
12			2	0	-.265	0	0	1498.549	NC
13			3	0	-.386	0	0	1028.61	NC
14			4	0	-.265	0	0	1498.549	NC
15			5	0	-.001	0	0	NC	NC

P Load Rating Output

Basic Load Cases

	BLC Description	Category	X Gravity	Y Gravity	Z Gravity	Joint	Point	Distribut...	Area(Me...	Surface(...
1	DL	None		-1						
2	Earth Vertical	None						1		
3	Earth Horizontal	None						2		
4	Earth Horizontal w/ Hydro	None						2		
5	Surcharge	None						2		
6	Lane Load	None						1		
16	HL-93 Truck	None								
17	HL-93 Tandem	None								
18	H-20	None								
19	3S2	None								
20	6 Axle Trailer	None								
21	3 Axle Straight	None								
22	4 Axle Straight	None								
23	5 Axle Semi	None								

Load Combinations

	Description	Solve	PD...	SR...	BLC	Fact...	BLC	Fact...	BLC	Fact...	BLC	Fact...	BLC	Fact...	BLC	Fact...	BLC	Fact...	BLC	Fact...
1	Strength 1 - Truck (max) ...		Y		1	1.25	2	1.35	3	1.5	5	1.5	6	2.1	M1	1.365				
2	Strength 1 - Truck (min) ...		Y		1	1.25	2	1.35	3	.9	5	.75	6	2.1	M1	1.365				
3	Strength 1 - Tandem (ma...		Y		1	1.25	2	1.35	3	1.5	5	1.5	6	2.1	M2	1.365				
4	Strength 1 - Tandem (min...		Y		1	1.25	2	1.35	3	.9	5	.75	6	2.1	M2	1.365				
5																				
6	Strength 1 - Truck (max) ...		Y		1	1.25	2	1.35	4	1.5	5	1.5	6	2.1	M1	1.365				
7	Strength 1 - Truck (min) ...		Y		1	1.25	2	1.35	4	.9	5	.75	6	2.1	M1	1.365				
8	Strength 1 - Tandem (ma...		Y		1	1.25	2	1.35	4	1.5	5	1.5	6	2.1	M2	1.365				
9	Strength 1 - Tandem (min...		Y		1	1.25	2	1.35	4	.9	5	.75	6	2.1	M2	1.365				
10																				
11	Service 1 - Truck wo hydro		Y		1	1	2	1	3	1	5	1	6	1.2	M1	.78				
12	Service 1 - Tandem wo h...		Y		1	1	2	1	3	1	5	1	6	1.2	M2	.78				
13																				
14	Service 1 - Truck w hydro		Y		1	1	2	1	4	1	5	1	6	1.2	M1	.78				
15	Service 1 - Tandem w hy...		Y		1	1	2	1	4	1	5	1	6	1.2	M2	.78				
16																				
17	HL-93 Truck	Yes	Y		M1	.78	6	1.2												
18	HL-93 Tandem	Yes	Y		M2	.78	6	1.2												
19	H-20		Y		M3	.78	6	1.2												
20	3S2		Y		M4	.78	6	1.2												
21	6 Axle Trailer		Y		M5	.78	6	1.2												
22	3 Axle Straight		Y		M6	.78	6	1.2												
23	4 Axle Straight		Y		M7	.78	6	1.2												
24	5 Axle Semi		Y		M8	.78	6	1.2												
25																				
26	DL		Y		1	1.25														
27	EL		Y		2	1	4	1												
28	LL - Truck		Y		M1	.5	6	1												
29	LL - Tandem		Y		M2	.5	6	1												

Member Distributed Loads (BLC 2 : Earth Vertical)

	Member Label	Direction	Start Magnitude[k/ft,d...	End Magnitude[k/ft,d...	Start Location[ft,%]	End Location[ft,%]
1	M3	Y	-.857	-.857	0	0

Member Distributed Loads (BLC 3 : Earth Horizontal)

	Member Label	Direction	Start Magnitude[k/ft,d...	End Magnitude[k/ft,d...	Start Location[ft,%]	End Location[ft,%]

Member Distributed Loads (BLC 3 : Earth Horizontal) (Continued)

	Member Label	Direction	Start Magnitude[k/ft,d..	End Magnitude[k/ft,d...	Start Location[ft,%]	End Location[ft,%]
1	M1	X	2.441	.351	0	0
2	M2	X	-.351	-2.441	0	0

Member Distributed Loads (BLC 4 : Earth Horizontal w/ Hydro)

	Member Label	Direction	Start Magnitude[k/ft,d..	End Magnitude[k/ft,d...	Start Location[ft,%]	End Location[ft,%]
1	M2	X	-.351	-3.781	0	0
2	M1	X	3.781	.351	0	0

Member Distributed Loads (BLC 5 : Surcharge)

	Member Label	Direction	Start Magnitude[k/ft,d..	End Magnitude[k/ft,d...	Start Location[ft,%]	End Location[ft,%]
1	M1	X	.771	.771	0	0
2	M2	X	-.771	-.771	0	0

Member Distributed Loads (BLC 6 : Lane Load)

	Member Label	Direction	Start Magnitude[k/ft,d..	End Magnitude[k/ft,d...	Start Location[ft,%]	End Location[ft,%]
1	M3	Y	-.269	-.269	0	0

Moving Loads

	Tag	Pattern	Increm...	Both W...	1st Joint	2nd Jo...	3rd Joint	4th Joint	5th Joint	6th Joint	7th Joint	8th Joint	9th Joint	10th J...
1	M1	HL-93TRUCK	.5	Yes	N2	N3								
2	M2	HL-93TANDEM	.5	Yes	N2	N3								
3	M3	H20	.5	Yes	N2	N3								
4	M4	TYPE3-S2	.5	Yes	N2	N3								
5	M5	6AXLETRAILER	.5	Yes	N2	N3								
6	M6	3A_STR	.5	Yes	N2	N3								
7	M7	4A_STR	.5	Yes	N2	N3								
8	M8	5A_SEMI	.5	Yes	N2	N3								

Moving Load Patterns

Pattern Label	Load (k)	Direction	Distance (ft)
HL-93TRUCK	-8	Y	0
	-32	Y	14
	-32	Y	28
HL-93TANDEM	-25	Y	0
	-25	Y	4
H20	-8	V	0
	-32	V	14
TYPE3-S2	-10	V	0
	-15.5	V	11
	-15.5	V	4
	-15.5	V	22
	-15.5	V	4
6AXLETRAILER	-12	Y	0
	-24	Y	11
	-24	Y	15.67
	-24	Y	46.67
	-24	Y	50.67
	-24	Y	54.67

Moving Load Patterns

Pattern Label	Load (k)	Direction	Distance (ft)
3A_STR	-12	Y	0
	-24	Y	15
	-24	Y	19
4A_STR	-12	Y	0
	-19	Y	15
	-19	Y	19
	-19	Y	23
5A_SEMI	-8	Y	0
	-17	Y	11
	-17	Y	15
	-17	Y	31
	-17	Y	35

Member Section Forces

	LC	Member Label	Sec	Axial[k]	y Shear[k]	z Shear[k]	Torque[k-ft]	y-y Moment[k-...	z-z Moment[k-...
1	27	M1	1	14.14	3.85	0	0	0	0
2			2	14.14	-2.505	0	0	0	-1.018
3			3	14.14	-7.234	0	0	0	8.47
4			4	14.14	-10.338	0	0	0	25.383
5			5	14.14	-11.816	0	0	0	46.64
6	27	M2	1	14.14	-11.816	0	0	0	-46.64
7			2	14.14	-10.338	0	0	0	-25.383
8			3	14.14	-7.234	0	0	0	-8.47
9			4	14.14	-2.505	0	0	0	1.018
10			5	14.14	3.85	0	0	0	0
11	27	M3	1	11.816	14.14	0	0	0	46.64
12			2	11.816	7.07	0	0	0	-40.855
13			3	11.816	0	0	0	0	-70.019
14			4	11.816	-7.07	0	0	0	-40.855
15			5	11.816	-14.14	0	0	0	46.64

Member Section Deflections

	LC	Member Label	Sec	x [in]	y [in]	z [in]	x Rotate[rad]	(n) L/y Ratio	(n) L/z Ratio
1	27	M1	1	0	0	0	0	NC	NC
2			2	0	.007	0	0	NC	NC
3			3	0	.014	0	0	6208.308	NC
4			4	0	.016	0	0	5705.849	NC
5			5	0	0	0	0	NC	NC
6	27	M2	1	0	0	0	0	NC	NC
7			2	0	-.016	0	0	5705.849	NC
8			3	0	-.014	0	0	6208.308	NC
9			4	0	-.007	0	0	NC	NC
10			5	0	0	0	0	NC	NC
11	27	M3	1	0	0	0	0	NC	NC
12			2	0	-.142	0	0	2806.167	NC
13			3	0	-.209	0	0	1902.354	NC
14			4	0	-.142	0	0	2806.167	NC
15			5	0	0	0	0	NC	NC

HL-93 Load Rating Output

Basic Load Cases

	BLC Description	Category	X Gravity	Y Gravity	Z Gravity	Joint	Point	Distribut...	Area(Me...	Surface(...
1	DL	None		-1						
2	Earth Vertical	None						1		
3	Earth Horizontal	None						2		
4	Earth Horizontal w/ Hydro	None						2		
5	Surcharge	None						2		
6	Lane Load	None						1		
16	HL-93 Truck	None								
17	HL-93 Tandem	None								
18	H-20	None								
19	3S2	None								
20	6 Axle Trailer	None								
21	3 Axle Straight	None								
22	4 Axle Straight	None								
23	5 Axle Semi	None								

Load Combinations

	Description	Solve	PD...	SR...	BLC	Fact...	BLC	Fact...	BLC	Fact...	BLC	Fact...	BLC	Fact...	BLC	Fact...	BLC	Fact...	BLC	Fact...
1	Strength 1 - Truck (max) ...		Y		1	1.25	2	1.35	3	1.5	5	1.5	6	2.1	M1	1.365				
2	Strength 1 - Truck (min) ...		Y		1	1.25	2	1.35	3	.9	5	.75	6	2.1	M1	1.365				
3	Strength 1 - Tandem (ma...		Y		1	1.25	2	1.35	3	1.5	5	1.5	6	2.1	M2	1.365				
4	Strength 1 - Tandem (min...		Y		1	1.25	2	1.35	3	.9	5	.75	6	2.1	M2	1.365				
5																				
6	Strength 1 - Truck (max) ...		Y		1	1.25	2	1.35	4	1.5	5	1.5	6	2.1	M1	1.365				
7	Strength 1 - Truck (min) ...		Y		1	1.25	2	1.35	4	.9	5	.75	6	2.1	M1	1.365				
8	Strength 1 - Tandem (ma...		Y		1	1.25	2	1.35	4	1.5	5	1.5	6	2.1	M2	1.365				
9	Strength 1 - Tandem (min...		Y		1	1.25	2	1.35	4	.9	5	.75	6	2.1	M2	1.365				
10																				
11	Service 1 - Truck wo hydro		Y		1	1	2	1	3	1	5	1	6	1.2	M1	.78				
12	Service 1 - Tandem wo h...		Y		1	1	2	1	3	1	5	1	6	1.2	M2	.78				
13																				
14	Service 1 - Truck w hydro		Y		1	1	2	1	4	1	5	1	6	1.2	M1	.78				
15	Service 1 - Tandem w hy...		Y		1	1	2	1	4	1	5	1	6	1.2	M2	.78				
16																				
17	HL-93 Truck	Yes	Y		M1	.78	6	1.2												
18	HL-93 Tandem	Yes	Y		M2	.78	6	1.2												
19	H-20		Y		M3	.78	6	1.2												
20	3S2		Y		M4	.78	6	1.2												
21	6 Axle Trailer		Y		M5	.78	6	1.2												
22	3 Axle Straight		Y		M6	.78	6	1.2												
23	4 Axle Straight		Y		M7	.78	6	1.2												
24	5 Axle Semi		Y		M8	.78	6	1.2												
25																				
26	DL		Y		1	1.25														
27	EL		Y		2	1	4	1												
28	LL - Truck		Y		M1	.5	6	1												
29	LL - Tandem		Y		M2	.5	6	1												

Member Distributed Loads (BLC 2 : Earth Vertical)

	Member Label	Direction	Start Magnitude[k/ft,d...	End Magnitude[k/ft,d...	Start Location[ft,%]	End Location[ft,%]
1	M3	Y	-.857	-.857	0	0

Member Distributed Loads (BLC 3 : Earth Horizontal)

Member Label	Direction	Start Magnitude[k/ft,d...	End Magnitude[k/ft,d...	Start Location[ft,%]	End Location[ft,%]

Member Distributed Loads (BLC 3 : Earth Horizontal) (Continued)

	Member Label	Direction	Start Magnitude[k/ft,d..	End Magnitude[k/ft,d...	Start Location[ft,%]	End Location[ft,%]
1	M1	X	2.441	.351	0	0
2	M2	X	-.351	-2.441	0	0

Member Distributed Loads (BLC 4 : Earth Horizontal w/ Hydro)

	Member Label	Direction	Start Magnitude[k/ft,d..	End Magnitude[k/ft,d...	Start Location[ft,%]	End Location[ft,%]
1	M2	X	-.351	-3.781	0	0
2	M1	X	3.781	.351	0	0

Member Distributed Loads (BLC 5 : Surcharge)

	Member Label	Direction	Start Magnitude[k/ft,d..	End Magnitude[k/ft,d...	Start Location[ft,%]	End Location[ft,%]
1	M1	X	.771	.771	0	0
2	M2	X	-.771	-.771	0	0

Member Distributed Loads (BLC 6 : Lane Load)

	Member Label	Direction	Start Magnitude[k/ft,d..	End Magnitude[k/ft,d...	Start Location[ft,%]	End Location[ft,%]
1	M3	Y	-.269	-.269	0	0

Moving Loads

	Tag	Pattern	Increm...	Both W...	1st Joint	2nd Jo...	3rd Joint	4th Joint	5th Joint	6th Joint	7th Joint	8th Joint	9th Joint	10th J...
1	M1	HL-93TRUCK	.5	Yes	N2	N3								
2	M2	HL-93TANDEM	.5	Yes	N2	N3								
3	M3	H20	.5	Yes	N2	N3								
4	M4	TYPE3-S2	.5	Yes	N2	N3								
5	M5	6AXLETRAILER	.5	Yes	N2	N3								
6	M6	3A_STR	.5	Yes	N2	N3								
7	M7	4A_STR	.5	Yes	N2	N3								
8	M8	5A_SEMI	.5	Yes	N2	N3								

Moving Load Patterns

Pattern Label	Load (k)	Direction	Distance (ft)
HL-93TRUCK	-8	Y	0
	-32	Y	14
	-32	Y	28
HL-93TANDEM	-25	Y	0
	-25	Y	4
H20	-8	V	0
	-32	V	14
TYPE3-S2	-10	V	0
	-15.5	V	11
	-15.5	V	4
	-15.5	V	22
	-15.5	V	4
6AXLETRAILER	-12	Y	0
	-24	Y	11
	-24	Y	15.67
	-24	Y	46.67
	-24	Y	50.67
	-24	Y	54.67

Moving Load Patterns

Pattern Label	Load (k)	Direction	Distance (ft)
3A_STR	-12	Y	0
	-24	Y	15
	-24	Y	19
4A_STR	-12	Y	0
	-19	Y	15
	-19	Y	19
	-19	Y	23
5A_SEMI	-8	Y	0
	-17	Y	11
	-17	Y	15
	-17	Y	31
	-17	Y	35

Envelope Member Section Forces

	Member	Sec		Axial[k]	LC	y Shear[k]	LC	z Shear[k]	LC	Torque[k-ft]	LC	y-y Momen...	LC	z-z Momen...	LC
1	M1	1	max	41.956	18	-1.981	17	0	17	0	17	0	17	0	17
2			min	5.326	17	-12.703	18	0	17	0	17	0	17	0	17
3		2	max	41.956	18	-1.981	17	0	17	0	17	0	17	24.083	18
4			min	5.326	17	-12.703	18	0	17	0	17	0	17	3.756	17
5		3	max	41.956	18	-1.981	17	0	17	0	17	0	17	48.165	18
6			min	5.326	17	-12.703	18	0	17	0	17	0	17	7.513	17
7		4	max	41.956	18	-1.981	17	0	17	0	17	0	17	72.248	18
8			min	5.326	17	-12.703	18	0	17	0	17	0	17	11.269	17
9		5	max	41.956	18	-1.981	17	0	17	0	17	0	17	96.33	18
10			min	5.326	17	-12.703	18	0	17	0	17	0	17	15.025	17
11	M2	1	max	41.956	18	-1.981	17	0	17	0	17	0	17	-15.025	17
12			min	5.326	17	-12.703	18	0	17	0	17	0	17	-96.33	18
13		2	max	41.956	18	-1.981	17	0	17	0	17	0	17	-11.269	17
14			min	5.326	17	-12.703	18	0	17	0	17	0	17	-72.248	18
15		3	max	41.956	18	-1.981	17	0	17	0	17	0	17	-7.513	17
16			min	5.326	17	-12.703	18	0	17	0	17	0	17	-48.165	18
17		4	max	41.956	18	-1.981	17	0	17	0	17	0	17	-3.756	17
18			min	5.326	17	-12.703	18	0	17	0	17	0	17	-24.083	18
19		5	max	41.956	18	-1.981	17	0	17	0	17	0	17	0	17
20			min	5.326	17	-12.703	18	0	17	0	17	0	17	0	17
21	M3	1	max	12.704	18	41.363	18	0	17	0	17	0	17	96.33	18
22			min	1.981	17	5.326	17	0	17	0	17	0	17	15.025	17
23		2	max	12.704	18	29.242	18	0	17	0	17	0	17	-17.889	17
24			min	1.981	17	-4.442	18	0	17	0	17	0	17	-168.914	18
25		3	max	12.704	18	16.551	18	0	17	0	17	0	17	-28.915	17
26			min	1.981	17	-17.141	18	0	17	0	17	0	17	-231.573	18
27		4	max	12.704	18	4.442	18	0	17	0	17	0	17	-17.889	17
28			min	1.981	17	-29.242	18	0	17	0	17	0	17	-168.914	18
29		5	max	12.704	18	-5.326	17	0	17	0	17	0	17	96.33	18
30			min	1.981	17	-41.363	18	0	17	0	17	0	17	15.025	17

Envelope Member Section Deflections

	Member	Sec		x [in]	LC	y [in]	LC	z [in]	LC	x Rotate [r...	LC	(n) L/y Ratio	LC	(n) L/z Ratio	LC
1	M1	1	max	0	17	0	17	0	17	0	17	NC	17	NC	17
2			min	0	17	0	17	0	17	0	17	NC	17	NC	17
3		2	max	0	17	.051	18	0	17	0	17	2596.58	18	NC	17
4			min	0	18	.005	17	0	17	0	17	NC	17	NC	17

Envelope Member Section Deflections (Continued)

	Member	Sec		x [in]	LC	y [in]	LC	z [in]	LC	x Rotate [r...	LC	(n) L/y Ratio	LC	(n) L/z Ratio	LC
5		3	max	0	17	.088	18	0	17	0	17	1663.312	18	NC	17
6			min	0	18	.003	18	0	17	0	17	NC	18	NC	17
7		4	max	0	17	.099	18	0	17	0	17	2012.576	18	NC	17
8			min	-.001	18	-.018	18	0	17	0	17	5007.432	18	NC	17
9		5	max	0	17	.074	18	0	17	0	17	NC	18	NC	17
10			min	-.002	18	-.075	18	0	17	0	17	1220.179	18	NC	17
11	M2	1	max	.002	18	.075	18	0	17	0	17	1220.179	18	NC	17
12			min	0	17	-.074	18	0	17	0	17	NC	18	NC	17
13		2	max	.001	18	.018	18	0	17	0	17	5007.432	18	NC	17
14			min	0	17	-.099	18	0	17	0	17	2012.576	18	NC	17
15		3	max	0	18	-.003	18	0	17	0	17	NC	18	NC	17
16			min	0	17	-.088	18	0	17	0	17	1663.312	18	NC	17
17		4	max	0	18	-.005	17	0	17	0	17	NC	17	NC	17
18			min	0	17	-.051	18	0	17	0	17	2596.58	18	NC	17
19		5	max	0	17	0	17	0	17	0	17	NC	17	NC	17
20			min	0	17	0	17	0	17	0	17	NC	17	NC	17
21	M3	1	max	.075	18	0	17	0	17	0	17	NC	17	NC	17
22			min	-.074	18	-.002	18	0	17	0	17	NC	18	NC	17
23		2	max	.074	18	-.061	17	0	17	0	17	6491.822	17	NC	17
24			min	-.074	18	-.422	18	0	17	0	17	940.968	18	NC	17
25		3	max	.074	18	-.089	17	0	17	0	17	4456.014	17	NC	17
26			min	-.074	18	-.619	18	0	17	0	17	640.354	18	NC	17
27		4	max	.074	18	-.061	17	0	17	0	17	6491.822	17	NC	17
28			min	-.074	18	-.422	18	0	17	0	17	940.968	18	NC	17
29		5	max	.074	18	0	17	0	17	0	17	NC	17	NC	17
30			min	-.075	18	-.002	18	0	17	0	17	NC	18	NC	17

H20 Load Rating Output

Basic Load Cases

	BLC Description	Category	X Gravity	Y Gravity	Z Gravity	Joint	Point	Distribut...	Area(Me...	Surface(...
1	DL	None		-1						
2	Earth Vertical	None						1		
3	Earth Horizontal	None						2		
4	Earth Horizontal w/ Hydro	None						2		
5	Surcharge	None						2		
6	Lane Load	None						1		
16	HL-93 Truck	None								
17	HL-93 Tandem	None								
18	H-20	None								
19	3S2	None								
20	6 Axle Trailer	None								
21	3 Axle Straight	None								
22	4 Axle Straight	None								
23	5 Axle Semi	None								

Load Combinations

	Description	Solve	PD...	SR...	BLC	Fact...	BLC	Fact...	BLC	Fact...	BLC	Fact...	BLC	Fact...	BLC	Fact...	BLC	Fact...	BLC	Fact...
1	Strength 1 - Truck (max) ...		Y		1	1.25	2	1.35	3	1.5	5	1.5	6	2.1	M1	1.365				
2	Strength 1 - Truck (min) ...		Y		1	1.25	2	1.35	3	.9	5	.75	6	2.1	M1	1.365				
3	Strength 1 - Tandem (ma...		Y		1	1.25	2	1.35	3	1.5	5	1.5	6	2.1	M2	1.365				
4	Strength 1 - Tandem (min...		Y		1	1.25	2	1.35	3	.9	5	.75	6	2.1	M2	1.365				
5																				
6	Strength 1 - Truck (max) ...		Y		1	1.25	2	1.35	4	1.5	5	1.5	6	2.1	M1	1.365				
7	Strength 1 - Truck (min) ...		Y		1	1.25	2	1.35	4	.9	5	.75	6	2.1	M1	1.365				
8	Strength 1 - Tandem (ma...		Y		1	1.25	2	1.35	4	1.5	5	1.5	6	2.1	M2	1.365				
9	Strength 1 - Tandem (min...		Y		1	1.25	2	1.35	4	.9	5	.75	6	2.1	M2	1.365				
10																				
11	Service 1 - Truck wo hydro		Y		1	1	2	1	3	1	5	1	6	1.2	M1	.78				
12	Service 1 - Tandem wo h...		Y		1	1	2	1	3	1	5	1	6	1.2	M2	.78				
13																				
14	Service 1 - Truck w hydro		Y		1	1	2	1	4	1	5	1	6	1.2	M1	.78				
15	Service 1 - Tandem w hy...		Y		1	1	2	1	4	1	5	1	6	1.2	M2	.78				
16																				
17	HL-93 Truck	Yes	Y		M1	.78	6	1.2												
18	HL-93 Tandem	Yes	Y		M2	.78	6	1.2												
19	H-20		Y		M3	.78	6	1.2												
20	3S2		Y		M4	.78	6	1.2												
21	6 Axle Trailer		Y		M5	.78	6	1.2												
22	3 Axle Straight		Y		M6	.78	6	1.2												
23	4 Axle Straight		Y		M7	.78	6	1.2												
24	5 Axle Semi		Y		M8	.78	6	1.2												
25																				
26	DL		Y		1	1.25														
27	EL		Y		2	1	4	1												
28	LL - Truck		Y		M1	.5	6	1												
29	LL - Tandem		Y		M2	.5	6	1												

Member Distributed Loads (BLC 2 : Earth Vertical)

	Member Label	Direction	Start Magnitude[k/ft,d...	End Magnitude[k/ft,d...	Start Location[ft,%]	End Location[ft,%]
1	M3	Y	-.857	-.857	0	0

Member Distributed Loads (BLC 3 : Earth Horizontal)

Member Label	Direction	Start Magnitude[k/ft,d...	End Magnitude[k/ft,d...	Start Location[ft,%]	End Location[ft,%]

Member Distributed Loads (BLC 3 : Earth Horizontal) (Continued)

	Member Label	Direction	Start Magnitude[k/ft,d..	End Magnitude[k/ft,d...	Start Location[ft,%]	End Location[ft,%]
1	M1	X	2.441	.351	0	0
2	M2	X	-.351	-2.441	0	0

Member Distributed Loads (BLC 4 : Earth Horizontal w/ Hydro)

	Member Label	Direction	Start Magnitude[k/ft,d..	End Magnitude[k/ft,d...	Start Location[ft,%]	End Location[ft,%]
1	M2	X	-.351	-3.781	0	0
2	M1	X	3.781	.351	0	0

Member Distributed Loads (BLC 5 : Surcharge)

	Member Label	Direction	Start Magnitude[k/ft,d..	End Magnitude[k/ft,d...	Start Location[ft,%]	End Location[ft,%]
1	M1	X	.771	.771	0	0
2	M2	X	-.771	-.771	0	0

Member Distributed Loads (BLC 6 : Lane Load)

	Member Label	Direction	Start Magnitude[k/ft,d..	End Magnitude[k/ft,d...	Start Location[ft,%]	End Location[ft,%]
1	M3	Y	-.269	-.269	0	0

Moving Loads

	Tag	Pattern	Increm...	Both W...	1st Joint	2nd Jo...	3rd Joint	4th Joint	5th Joint	6th Joint	7th Joint	8th Joint	9th Joint	10th J...
1	M1	HL-93TRUCK	.5	Yes	N2	N3								
2	M2	HL-93TANDEM	.5	Yes	N2	N3								
3	M3	H20	.5	Yes	N2	N3								
4	M4	TYPE3-S2	.5	Yes	N2	N3								
5	M5	6AXLETRAILER	.5	Yes	N2	N3								
6	M6	3A_STR	.5	Yes	N2	N3								
7	M7	4A_STR	.5	Yes	N2	N3								
8	M8	5A_SEMI	.5	Yes	N2	N3								

Moving Load Patterns

Pattern Label	Load (k)	Direction	Distance (ft)
HL-93TRUCK	-8	Y	0
	-32	Y	14
	-32	Y	28
HL-93TANDEM	-25	Y	0
	-25	Y	4
H20	-8	V	0
	-32	V	14
TYPE3-S2	-10	V	0
	-15.5	V	11
	-15.5	V	4
	-15.5	V	22
	-15.5	V	4
6AXLETRAILER	-12	Y	0
	-24	Y	11
	-24	Y	15.67
	-24	Y	46.67
	-24	Y	50.67
	-24	Y	54.67

Moving Load Patterns

Pattern Label	Load (k)	Direction	Distance (ft)
3A_STR	-12	Y	0
	-24	Y	15
	-24	Y	19
4A_STR	-12	Y	0
	-19	Y	15
	-19	Y	19
	-19	Y	23
5A_SEMI	-8	Y	0
	-17	Y	11
	-17	Y	15
	-17	Y	31
	-17	Y	35

Envelope Member Section Forces

	Member	Sec		Axial[k]	LC	y Shear[k]	LC	z Shear[k]	LC	Torque[k-ft]	LC	y-y Momen...	LC	z-z Momen...	LC
1	M1	1	max	33.878	19	-1.981	19	0	19	0	19	0	19	0	19
2			min	5.326	19	-9.687	19	0	19	0	19	0	19	0	19
3		2	max	33.878	19	-1.981	19	0	19	0	19	0	19	18.364	19
4			min	5.326	19	-9.687	19	0	19	0	19	0	19	3.756	19
5		3	max	33.878	19	-1.981	19	0	19	0	19	0	19	36.728	19
6			min	5.326	19	-9.687	19	0	19	0	19	0	19	7.513	19
7		4	max	33.878	19	-1.981	19	0	19	0	19	0	19	55.092	19
8			min	5.326	19	-9.687	19	0	19	0	19	0	19	11.269	19
9		5	max	33.878	19	-1.981	19	0	19	0	19	0	19	73.456	19
10			min	5.326	19	-9.687	19	0	19	0	19	0	19	15.025	19
11	M2	1	max	33.878	19	-1.981	19	0	19	0	19	0	19	-15.025	19
12			min	5.326	19	-9.687	19	0	19	0	19	0	19	-73.456	19
13		2	max	33.878	19	-1.981	19	0	19	0	19	0	19	-11.269	19
14			min	5.326	19	-9.687	19	0	19	0	19	0	19	-55.092	19
15		3	max	33.878	19	-1.981	19	0	19	0	19	0	19	-7.513	19
16			min	5.326	19	-9.687	19	0	19	0	19	0	19	-36.728	19
17		4	max	33.878	19	-1.981	19	0	19	0	19	0	19	-3.756	19
18			min	5.326	19	-9.687	19	0	19	0	19	0	19	-18.364	19
19		5	max	33.878	19	-1.981	19	0	19	0	19	0	19	0	19
20			min	5.326	19	-9.687	19	0	19	0	19	0	19	0	19
21	M3	1	max	9.683	19	33.404	19	0	19	0	19	0	19	73.456	19
22			min	1.981	19	5.326	19	0	19	0	19	0	19	15.025	19
23		2	max	9.683	19	23.173	19	0	19	0	19	0	19	-17.889	19
24			min	1.981	19	-3.395	19	0	19	0	19	0	19	-135.391	19
25		3	max	9.683	19	12.482	19	0	19	0	19	0	19	-28.915	19
26			min	1.981	19	-12.954	19	0	19	0	19	0	19	-186.127	19
27		4	max	9.683	19	3.395	19	0	19	0	19	0	19	-17.889	19
28			min	1.981	19	-23.173	19	0	19	0	19	0	19	-135.391	19
29		5	max	9.683	19	-5.326	19	0	19	0	19	0	19	73.456	19
30			min	1.981	19	-33.404	19	0	19	0	19	0	19	15.025	19

Envelope Member Section Deflections

	Member	Sec		x [in]	LC	y [in]	LC	z [in]	LC	x Rotate [r...	LC	(n) L/y Ratio	LC	(n) L/z Ratio	LC
1	M1	1	max	0	19	0	19	0	19	0	19	NC	19	NC	19
2			min	0	19	0	19	0	19	0	19	NC	19	NC	19
3		2	max	0	19	.038	19	0	19	0	19	3189.132	19	NC	19
4			min	0	19	.005	19	0	19	0	19	NC	19	NC	19

Envelope Member Section Deflections (Continued)

	Member	Sec		x [in]	LC	y [in]	LC	z [in]	LC	x Rotate [r...	LC	(n) L/y Ratio	LC	(n) L/z Ratio	LC
5		3	max	0	19	.064	19	0	19	0	19	2028.762	19	NC	19
6			min	0	19	.004	19	0	19	0	19	NC	19	NC	19
7		4	max	0	19	.069	19	0	19	0	19	2796.534	19	NC	19
8			min	-.001	19	-.011	19	0	19	0	19	8392.354	19	NC	19
9		5	max	0	19	.05	19	0	19	0	19	NC	19	NC	19
10			min	-.001	19	-.051	19	0	19	0	19	1787.983	19	NC	19
11	M2	1	max	.001	19	.051	19	0	19	0	19	1787.983	19	NC	19
12			min	0	19	-.05	19	0	19	0	19	NC	19	NC	19
13		2	max	.001	19	.011	19	0	19	0	19	8392.354	19	NC	19
14			min	0	19	-.069	19	0	19	0	19	2796.534	19	NC	19
15		3	max	0	19	-.004	19	0	19	0	19	NC	19	NC	19
16			min	0	19	-.064	19	0	19	0	19	2028.762	19	NC	19
17		4	max	0	19	-.005	19	0	19	0	19	NC	19	NC	19
18			min	0	19	-.038	19	0	19	0	19	3189.132	19	NC	19
19		5	max	0	19	0	19	0	19	0	19	NC	19	NC	19
20			min	0	19	0	19	0	19	0	19	NC	19	NC	19
21	M3	1	max	.051	19	0	19	0	19	0	19	NC	19	NC	19
22			min	-.05	19	-.001	19	0	19	0	19	NC	19	NC	19
23		2	max	.051	19	-.061	19	0	19	0	19	6491.822	19	NC	19
24			min	-.05	19	-.32	19	0	19	0	19	1240.08	19	NC	19
25		3	max	.051	19	-.089	19	0	19	0	19	4456.014	19	NC	19
26			min	-.051	19	-.46	19	0	19	0	19	863.235	19	NC	19
27		4	max	.05	19	-.061	19	0	19	0	19	6491.822	19	NC	19
28			min	-.051	19	-.32	19	0	19	0	19	1240.08	19	NC	19
29		5	max	.05	19	0	19	0	19	0	19	NC	19	NC	19
30			min	-.051	19	-.001	19	0	19	0	19	NC	19	NC	19

3S2 Load Rating Output

Basic Load Cases

	BLC Description	Category	X Gravity	Y Gravity	Z Gravity	Joint	Point	Distribut...	Area(Me...	Surface(...
1	DL	None		-1						
2	Earth Vertical	None						1		
3	Earth Horizontal	None						2		
4	Earth Horizontal w/ Hydro	None						2		
5	Surcharge	None						2		
6	Lane Load	None						1		
16	HL-93 Truck	None								
17	HL-93 Tandem	None								
18	H-20	None								
19	3S2	None								
20	6 Axle Trailer	None								
21	3 Axle Straight	None								
22	4 Axle Straight	None								
23	5 Axle Semi	None								

Load Combinations

	Description	Solve	PD...	SR...	BLC	Fact...	BLC	Fact...	BLC	Fact...	BLC	Fact...	BLC	Fact...	BLC	Fact...	BLC	Fact...	BLC	Fact...
1	Strength 1 - Truck (max) ...		Y		1	1.25	2	1.35	3	1.5	5	1.5	6	2.1	M1	1.365				
2	Strength 1 - Truck (min) ...		Y		1	1.25	2	1.35	3	.9	5	.75	6	2.1	M1	1.365				
3	Strength 1 - Tandem (ma...		Y		1	1.25	2	1.35	3	1.5	5	1.5	6	2.1	M2	1.365				
4	Strength 1 - Tandem (min...		Y		1	1.25	2	1.35	3	.9	5	.75	6	2.1	M2	1.365				
5																				
6	Strength 1 - Truck (max) ...		Y		1	1.25	2	1.35	4	1.5	5	1.5	6	2.1	M1	1.365				
7	Strength 1 - Truck (min) ...		Y		1	1.25	2	1.35	4	.9	5	.75	6	2.1	M1	1.365				
8	Strength 1 - Tandem (ma...		Y		1	1.25	2	1.35	4	1.5	5	1.5	6	2.1	M2	1.365				
9	Strength 1 - Tandem (min...		Y		1	1.25	2	1.35	4	.9	5	.75	6	2.1	M2	1.365				
10																				
11	Service 1 - Truck wo hydro		Y		1	1	2	1	3	1	5	1	6	1.2	M1	.78				
12	Service 1 - Tandem wo h...		Y		1	1	2	1	3	1	5	1	6	1.2	M2	.78				
13																				
14	Service 1 - Truck w hydro		Y		1	1	2	1	4	1	5	1	6	1.2	M1	.78				
15	Service 1 - Tandem w hy...		Y		1	1	2	1	4	1	5	1	6	1.2	M2	.78				
16																				
17	HL-93 Truck	Yes	Y		M1	.78	6	1.2												
18	HL-93 Tandem	Yes	Y		M2	.78	6	1.2												
19	H-20		Y		M3	.78	6	1.2												
20	3S2		Y		M4	.78	6	1.2												
21	6 Axle Trailer		Y		M5	.78	6	1.2												
22	3 Axle Straight		Y		M6	.78	6	1.2												
23	4 Axle Straight		Y		M7	.78	6	1.2												
24	5 Axle Semi		Y		M8	.78	6	1.2												
25																				
26	DL		Y		1	1.25														
27	EL		Y		2	1	4	1												
28	LL - Truck		Y		M1	.5	6	1												
29	LL - Tandem		Y		M2	.5	6	1												

Member Distributed Loads (BLC 2 : Earth Vertical)

	Member Label	Direction	Start Magnitude[k/ft,d...	End Magnitude[k/ft,d...	Start Location[ft,%]	End Location[ft,%]
1	M3	Y	-.857	-.857	0	0

Member Distributed Loads (BLC 3 : Earth Horizontal)

Member Label	Direction	Start Magnitude[k/ft,d...	End Magnitude[k/ft,d...	Start Location[ft,%]	End Location[ft,%]

Member Distributed Loads (BLC 3 : Earth Horizontal) (Continued)

	Member Label	Direction	Start Magnitude[k/ft,d..	End Magnitude[k/ft,d...	Start Location[ft,%]	End Location[ft,%]
1	M1	X	2.441	.351	0	0
2	M2	X	-.351	-2.441	0	0

Member Distributed Loads (BLC 4 : Earth Horizontal w/ Hydro)

	Member Label	Direction	Start Magnitude[k/ft,d..	End Magnitude[k/ft,d...	Start Location[ft,%]	End Location[ft,%]
1	M2	X	-.351	-3.781	0	0
2	M1	X	3.781	.351	0	0

Member Distributed Loads (BLC 5 : Surcharge)

	Member Label	Direction	Start Magnitude[k/ft,d..	End Magnitude[k/ft,d...	Start Location[ft,%]	End Location[ft,%]
1	M1	X	.771	.771	0	0
2	M2	X	-.771	-.771	0	0

Member Distributed Loads (BLC 6 : Lane Load)

	Member Label	Direction	Start Magnitude[k/ft,d..	End Magnitude[k/ft,d...	Start Location[ft,%]	End Location[ft,%]
1	M3	Y	-.269	-.269	0	0

Moving Loads

	Tag	Pattern	Increm...	Both W...	1st Joint	2nd Jo...	3rd Joint	4th Joint	5th Joint	6th Joint	7th Joint	8th Joint	9th Joint	10th J...
1	M1	HL-93TRUCK	.5	Yes	N2	N3								
2	M2	HL-93TANDEM	.5	Yes	N2	N3								
3	M3	H20	.5	Yes	N2	N3								
4	M4	TYPE3-S2	.5	Yes	N2	N3								
5	M5	6AXLETRAILER	.5	Yes	N2	N3								
6	M6	3A_STR	.5	Yes	N2	N3								
7	M7	4A_STR	.5	Yes	N2	N3								
8	M8	5A_SEMI	.5	Yes	N2	N3								

Moving Load Patterns

Pattern Label	Load (k)	Direction	Distance (ft)
HL-93TRUCK	-8	Y	0
	-32	Y	14
	-32	Y	28
HL-93TANDEM	-25	Y	0
	-25	Y	4
H20	-8	V	0
	-32	V	14
TYPE3-S2	-10	V	0
	-15.5	V	11
	-15.5	V	4
	-15.5	V	22
	-15.5	V	4
6AXLETRAILER	-12	Y	0
	-24	Y	11
	-24	Y	15.67
	-24	Y	46.67
	-24	Y	50.67
	-24	Y	54.67

Moving Load Patterns

Pattern Label	Load (k)	Direction	Distance (ft)
3A_STR	-12	Y	0
	-24	Y	15
	-24	Y	19
4A_STR	-12	Y	0
	-19	Y	15
	-19	Y	19
	-19	Y	23
5A_SEMI	-8	Y	0
	-17	Y	11
	-17	Y	15
	-17	Y	31
	-17	Y	35

Envelope Member Section Forces

	Member	Sec		Axial[k]	LC	y Shear[k]	LC	z Shear[k]	LC	Torque[k-ft]	LC	y-y Momen...	LC	z-z Momen...	LC
1	M1	1	max	32.291	20	-1.981	20	0	20	0	20	0	20	0	20
2			min	5.326	20	-9.785	20	0	20	0	20	0	20	0	20
3		2	max	32.291	20	-1.981	20	0	20	0	20	0	20	18.55	20
4			min	5.326	20	-9.785	20	0	20	0	20	0	20	3.756	20
5		3	max	32.291	20	-1.981	20	0	20	0	20	0	20	37.1	20
6			min	5.326	20	-9.785	20	0	20	0	20	0	20	7.513	20
7		4	max	32.291	20	-1.981	20	0	20	0	20	0	20	55.651	20
8			min	5.326	20	-9.785	20	0	20	0	20	0	20	11.269	20
9		5	max	32.291	20	-1.981	20	0	20	0	20	0	20	74.201	20
10			min	5.326	20	-9.785	20	0	20	0	20	0	20	15.026	20
11	M2	1	max	32.291	20	-1.981	20	0	20	0	20	0	20	-15.026	20
12			min	5.326	20	-9.785	20	0	20	0	20	0	20	-74.201	20
13		2	max	32.291	20	-1.981	20	0	20	0	20	0	20	-11.269	20
14			min	5.326	20	-9.785	20	0	20	0	20	0	20	-55.651	20
15		3	max	32.291	20	-1.981	20	0	20	0	20	0	20	-7.513	20
16			min	5.326	20	-9.785	20	0	20	0	20	0	20	-37.1	20
17		4	max	32.291	20	-1.981	20	0	20	0	20	0	20	-3.756	20
18			min	5.326	20	-9.785	20	0	20	0	20	0	20	-18.55	20
19		5	max	32.291	20	-1.981	20	0	20	0	20	0	20	0	20
20			min	5.326	20	-9.785	20	0	20	0	20	0	20	0	20
21	M3	1	max	9.783	20	31.806	20	0	20	0	20	0	20	74.201	20
22			min	1.982	20	5.326	20	0	20	0	20	0	20	15.026	20
23		2	max	9.783	20	21.391	20	0	20	0	20	0	20	-17.912	20
24			min	1.982	20	-1.74	20	0	20	0	20	0	20	-117.069	20
25		3	max	9.783	20	10.498	20	0	20	0	20	0	20	-28.915	20
26			min	1.982	20	-10.983	20	0	20	0	20	0	20	-166.845	20
27		4	max	9.783	20	1.74	20	0	20	0	20	0	20	-17.912	20
28			min	1.982	20	-21.391	20	0	20	0	20	0	20	-117.069	20
29		5	max	9.783	20	-5.326	20	0	20	0	20	0	20	74.201	20
30			min	1.982	20	-31.806	20	0	20	0	20	0	20	15.026	20

Envelope Member Section Deflections

	Member	Sec		x [in]	LC	y [in]	LC	z [in]	LC	x Rotate [r...	LC	(n) L/y Ratio	LC	(n) L/z Ratio	LC
1	M1	1	max	0	20	0	20	0	20	0	20	NC	20	NC	20
2			min	0	20	0	20	0	20	0	20	NC	20	NC	20
3		2	max	0	20	.037	20	0	20	0	20	3174.729	20	NC	20
4			min	0	20	.005	20	0	20	0	20	NC	20	NC	20

Envelope Member Section Deflections (Continued)

	Member	Sec		x [in]	LC	y [in]	LC	z [in]	LC	x Rotate [r...	LC	(n) L/y Ratio	LC	(n) L/z Ratio	LC
5		3	max	0	20	.062	20	0	20	0	20	2021.316	20	NC	20
6			min	0	20	.006	20	0	20	0	20	NC	20	NC	20
7		4	max	0	20	.066	20	0	20	0	20	2358.577	20	NC	20
8			min	0	20	-.008	20	0	20	0	20	NC	20	NC	20
9		5	max	0	20	.045	20	0	20	0	20	NC	20	NC	20
10			min	-.001	20	-.046	20	0	20	0	20	1976.007	20	NC	20
11	M2	1	max	.001	20	.046	20	0	20	0	20	1976.007	20	NC	20
12			min	0	20	-.045	20	0	20	0	20	NC	20	NC	20
13		2	max	0	20	.008	20	0	20	0	20	NC	20	NC	20
14			min	0	20	-.066	20	0	20	0	20	2358.577	20	NC	20
15		3	max	0	20	-.006	20	0	20	0	20	NC	20	NC	20
16			min	0	20	-.062	20	0	20	0	20	2021.316	20	NC	20
17		4	max	0	20	-.005	20	0	20	0	20	NC	20	NC	20
18			min	0	20	-.037	20	0	20	0	20	3174.729	20	NC	20
19		5	max	0	20	0	20	0	20	0	20	NC	20	NC	20
20			min	0	20	0	20	0	20	0	20	NC	20	NC	20
21	M3	1	max	.046	20	0	20	0	20	0	20	NC	20	NC	20
22			min	-.045	20	-.001	20	0	20	0	20	NC	20	NC	20
23		2	max	.046	20	-.061	20	0	20	0	20	6491.821	20	NC	20
24			min	-.046	20	-.319	20	0	20	0	20	1244.18	20	NC	20
25		3	max	.046	20	-.089	20	0	20	0	20	4456.014	20	NC	20
26			min	-.046	20	-.458	20	0	20	0	20	866.317	20	NC	20
27		4	max	.046	20	-.061	20	0	20	0	20	6491.821	20	NC	20
28			min	-.046	20	-.319	20	0	20	0	20	1244.18	20	NC	20
29		5	max	.045	20	0	20	0	20	0	20	NC	20	NC	20
30			min	-.046	20	-.001	20	0	20	0	20	NC	20	NC	20

6 Axle Load Rating Output

Basic Load Cases

	BLC Description	Category	X Gravity	Y Gravity	Z Gravity	Joint	Point	Distribut...	Area(Me...	Surface(...
1	DL	None		-1						
2	Earth Vertical	None						1		
3	Earth Horizontal	None						2		
4	Earth Horizontal w/ Hydro	None						2		
5	Surcharge	None						2		
6	Lane Load	None						1		
16	HL-93 Truck	None								
17	HL-93 Tandem	None								
18	H-20	None								
19	3S2	None								
20	6 Axle Trailer	None								
21	3 Axle Straight	None								
22	4 Axle Straight	None								
23	5 Axle Semi	None								

Load Combinations

	Description	Solve	PD...	SR...	BLC	Fact...	BLC	Fact...	BLC	Fact...	BLC	Fact...	BLC	Fact...	BLC	Fact...	BLC	Fact...	BLC	Fact...
1	Strength 1 - Truck (max) ...		Y		1	1.25	2	1.35	3	1.5	5	1.5	6	2.1	M1	1.365				
2	Strength 1 - Truck (min) ...		Y		1	1.25	2	1.35	3	.9	5	.75	6	2.1	M1	1.365				
3	Strength 1 - Tandem (ma...		Y		1	1.25	2	1.35	3	1.5	5	1.5	6	2.1	M2	1.365				
4	Strength 1 - Tandem (min...		Y		1	1.25	2	1.35	3	.9	5	.75	6	2.1	M2	1.365				
5																				
6	Strength 1 - Truck (max) ...		Y		1	1.25	2	1.35	4	1.5	5	1.5	6	2.1	M1	1.365				
7	Strength 1 - Truck (min) ...		Y		1	1.25	2	1.35	4	.9	5	.75	6	2.1	M1	1.365				
8	Strength 1 - Tandem (ma...		Y		1	1.25	2	1.35	4	1.5	5	1.5	6	2.1	M2	1.365				
9	Strength 1 - Tandem (min...		Y		1	1.25	2	1.35	4	.9	5	.75	6	2.1	M2	1.365				
10																				
11	Service 1 - Truck wo hydro		Y		1	1	2	1	3	1	5	1	6	1.2	M1	.78				
12	Service 1 - Tandem wo h...		Y		1	1	2	1	3	1	5	1	6	1.2	M2	.78				
13																				
14	Service 1 - Truck w hydro		Y		1	1	2	1	4	1	5	1	6	1.2	M1	.78				
15	Service 1 - Tandem w hy...		Y		1	1	2	1	4	1	5	1	6	1.2	M2	.78				
16																				
17	HL-93 Truck	Yes	Y		M1	.78	6	1.2												
18	HL-93 Tandem	Yes	Y		M2	.78	6	1.2												
19	H-20		Y		M3	.78	6	1.2												
20	3S2		Y		M4	.78	6	1.2												
21	6 Axle Trailer		Y		M5	.78	6	1.2												
22	3 Axle Straight		Y		M6	.78	6	1.2												
23	4 Axle Straight		Y		M7	.78	6	1.2												
24	5 Axle Semi		Y		M8	.78	6	1.2												
25																				
26	DL		Y		1	1.25														
27	EL		Y		2	1	4	1												
28	LL - Truck		Y		M1	.5	6	1												
29	LL - Tandem		Y		M2	.5	6	1												

Member Distributed Loads (BLC 2 : Earth Vertical)

	Member Label	Direction	Start Magnitude[k/ft,d...	End Magnitude[k/ft,d...	Start Location[ft,%]	End Location[ft,%]
1	M3	Y	-.857	-.857	0	0

Member Distributed Loads (BLC 3 : Earth Horizontal)

Member Label	Direction	Start Magnitude[k/ft,d...	End Magnitude[k/ft,d...	Start Location[ft,%]	End Location[ft,%]

Member Distributed Loads (BLC 3 : Earth Horizontal) (Continued)

	Member Label	Direction	Start Magnitude[k/ft,d..	End Magnitude[k/ft,d...	Start Location[ft,%]	End Location[ft,%]
1	M1	X	2.441	.351	0	0
2	M2	X	-.351	-2.441	0	0

Member Distributed Loads (BLC 4 : Earth Horizontal w/ Hydro)

	Member Label	Direction	Start Magnitude[k/ft,d..	End Magnitude[k/ft,d...	Start Location[ft,%]	End Location[ft,%]
1	M2	X	-.351	-3.781	0	0
2	M1	X	3.781	.351	0	0

Member Distributed Loads (BLC 5 : Surcharge)

	Member Label	Direction	Start Magnitude[k/ft,d..	End Magnitude[k/ft,d...	Start Location[ft,%]	End Location[ft,%]
1	M1	X	.771	.771	0	0
2	M2	X	-.771	-.771	0	0

Member Distributed Loads (BLC 6 : Lane Load)

	Member Label	Direction	Start Magnitude[k/ft,d..	End Magnitude[k/ft,d...	Start Location[ft,%]	End Location[ft,%]
1	M3	Y	-.269	-.269	0	0

Moving Loads

	Tag	Pattern	Increm...	Both W...	1st Joint	2nd Jo...	3rd Joint	4th Joint	5th Joint	6th Joint	7th Joint	8th Joint	9th Joint	10th J...
1	M1	HL-93TRUCK	.5	Yes	N2	N3								
2	M2	HL-93TANDEM	.5	Yes	N2	N3								
3	M3	H20	.5	Yes	N2	N3								
4	M4	TYPE3-S2	.5	Yes	N2	N3								
5	M5	6AXLETRAILER	.5	Yes	N2	N3								
6	M6	3A_STR	.5	Yes	N2	N3								
7	M7	4A_STR	.5	Yes	N2	N3								
8	M8	5A_SEMI	.5	Yes	N2	N3								

Moving Load Patterns

Pattern Label	Load (k)	Direction	Distance (ft)
HL-93TRUCK	-8	Y	0
	-32	Y	14
	-32	Y	28
HL-93TANDEM	-25	Y	0
	-25	Y	4
H20	-8	V	0
	-32	V	14
TYPE3-S2	-10	V	0
	-15.5	V	11
	-15.5	V	4
	-15.5	V	22
	-15.5	V	4
6AXLETRAILER	-12	Y	0
	-24	Y	11
	-24	Y	15.67
	-24	Y	46.67
	-24	Y	50.67
	-24	Y	54.67

Moving Load Patterns

Pattern Label	Load (k)	Direction	Distance (ft)
3A_STR	-12	Y	0
	-24	Y	15
	-24	Y	19
4A_STR	-12	Y	0
	-19	Y	15
	-19	Y	19
	-19	Y	23
5A_SEMI	-8	Y	0
	-17	Y	11
	-17	Y	15
	-17	Y	31
	-17	Y	35

Envelope Member Section Forces

	Member	Sec		Axial[k]	LC	y Shear[k]	LC	z Shear[k]	LC	Torque[k-ft]	LC	y-y Momen...	LC	z-z Momen...	LC
1	M1	1	max	35.207	21	-1.981	21	0	21	0	21	0	21	0	21
2			min	5.326	21	-10.072	21	0	21	0	21	0	21	0	21
3		2	max	35.207	21	-1.981	21	0	21	0	21	0	21	19.094	21
4			min	5.326	21	-10.072	21	0	21	0	21	0	21	3.756	21
5		3	max	35.207	21	-1.981	21	0	21	0	21	0	21	38.187	21
6			min	5.326	21	-10.072	21	0	21	0	21	0	21	7.513	21
7		4	max	35.207	21	-1.981	21	0	21	0	21	0	21	57.281	21
8			min	5.326	21	-10.072	21	0	21	0	21	0	21	11.269	21
9		5	max	35.207	21	-1.981	21	0	21	0	21	0	21	76.374	21
10			min	5.326	21	-10.072	21	0	21	0	21	0	21	15.026	21
11	M2	1	max	35.207	21	-1.981	21	0	21	0	21	0	21	-15.026	21
12			min	5.326	21	-10.072	21	0	21	0	21	0	21	-76.374	21
13		2	max	35.207	21	-1.981	21	0	21	0	21	0	21	-11.269	21
14			min	5.326	21	-10.072	21	0	21	0	21	0	21	-57.281	21
15		3	max	35.207	21	-1.981	21	0	21	0	21	0	21	-7.513	21
16			min	5.326	21	-10.072	21	0	21	0	21	0	21	-38.187	21
17		4	max	35.207	21	-1.981	21	0	21	0	21	0	21	-3.756	21
18			min	5.326	21	-10.072	21	0	21	0	21	0	21	-19.094	21
19		5	max	35.207	21	-1.981	21	0	21	0	21	0	21	0	21
20			min	5.326	21	-10.072	21	0	21	0	21	0	21	0	21
21	M3	1	max	10.072	21	35.207	21	0	21	0	21	0	21	76.374	21
22			min	1.982	21	5.326	21	0	21	0	21	0	21	15.026	21
23		2	max	10.072	21	21.763	21	0	21	0	21	0	21	-17.9	21
24			min	1.982	21	-1.982	21	0	21	0	21	0	21	-114.77	21
25		3	max	10.072	21	9.742	21	0	21	0	21	0	21	-28.915	21
26			min	1.982	21	-10.451	21	0	21	0	21	0	21	-162.369	21
27		4	max	10.072	21	1.982	21	0	21	0	21	0	21	-17.9	21
28			min	1.982	21	-21.763	21	0	21	0	21	0	21	-114.77	21
29		5	max	10.072	21	-5.326	21	0	21	0	21	0	21	76.374	21
30			min	1.982	21	-35.207	21	0	21	0	21	0	21	15.026	21

Envelope Member Section Deflections

	Member	Sec		x [in]	LC	y [in]	LC	z [in]	LC	x Rotate [r...	LC	(n) L/y Ratio	LC	(n) L/z Ratio	LC
1	M1	1	max	0	21	0	21	0	21	0	21	NC	21	NC	21
2			min	0	21	0	21	0	21	0	21	NC	21	NC	21
3		2	max	0	21	.034	21	0	21	0	21	3482.07	21	NC	21
4			min	0	21	.005	21	0	21	0	21	NC	21	NC	21

Envelope Member Section Deflections (Continued)

	Member	Sec		x [in]	LC	y [in]	LC	z [in]	LC	x Rotate [r...	LC	(n) L/y Ratio	LC	(n) L/z Ratio	LC
5		3	max	0	21	.058	21	0	21	0	21	2176.293	21	NC	21
6			min	0	21	.005	21	0	21	0	21	NC	21	NC	21
7		4	max	0	21	.061	21	0	21	0	21	2592.58	21	NC	21
8			min	-.001	21	-.006	21	0	21	0	21	NC	21	NC	21
9		5	max	0	21	.038	21	0	21	0	21	NC	21	NC	21
10			min	-.001	21	-.038	21	0	21	0	21	2387.312	21	NC	21
11	M2	1	max	.001	21	.038	21	0	21	0	21	2387.312	21	NC	21
12			min	0	21	-.038	21	0	21	0	21	NC	21	NC	21
13		2	max	.001	21	.006	21	0	21	0	21	NC	21	NC	21
14			min	0	21	-.061	21	0	21	0	21	2592.58	21	NC	21
15		3	max	0	21	-.005	21	0	21	0	21	NC	21	NC	21
16			min	0	21	-.058	21	0	21	0	21	2176.293	21	NC	21
17		4	max	0	21	-.005	21	0	21	0	21	NC	21	NC	21
18			min	0	21	-.034	21	0	21	0	21	3482.07	21	NC	21
19		5	max	0	21	0	21	0	21	0	21	NC	21	NC	21
20			min	0	21	0	21	0	21	0	21	NC	21	NC	21
21	M3	1	max	.038	21	0	21	0	21	0	21	NC	21	NC	21
22			min	-.038	21	-.001	21	0	21	0	21	NC	21	NC	21
23		2	max	.038	21	-.061	21	0	21	0	21	6491.823	21	NC	21
24			min	-.038	21	-.312	21	0	21	0	21	1272.849	21	NC	21
25		3	max	.038	21	-.089	21	0	21	0	21	4456.014	21	NC	21
26			min	-.038	21	-.444	21	0	21	0	21	894.793	21	NC	21
27		4	max	.038	21	-.061	21	0	21	0	21	6491.823	21	NC	21
28			min	-.038	21	-.312	21	0	21	0	21	1272.849	21	NC	21
29		5	max	.038	21	0	21	0	21	0	21	NC	21	NC	21
30			min	-.038	21	-.001	21	0	21	0	21	NC	21	NC	21

3 Axle Load Rating Output

Basic Load Cases

	BLC Description	Category	X Gravity	Y Gravity	Z Gravity	Joint	Point	Distribut...	Area(Me...	Surface(...
1	DL	None		-1						
2	Earth Vertical	None						1		
3	Earth Horizontal	None						2		
4	Earth Horizontal w/ Hydro	None						2		
5	Surcharge	None						2		
6	Lane Load	None						1		
16	HL-93 Truck	None								
17	HL-93 Tandem	None								
18	H-20	None								
19	3S2	None								
20	6 Axle Trailer	None								
21	3 Axle Straight	None								
22	4 Axle Straight	None								
23	5 Axle Semi	None								

Load Combinations

	Description	Solve	PD...	SR...	BLC	Fact...	BLC	Fact...	BLC	Fact...	BLC	Fact...	BLC	Fact...	BLC	Fact...	BLC	Fact...	BLC	Fact...
1	Strength 1 - Truck (max) ...		Y		1	1.25	2	1.35	3	1.5	5	1.5	6	2.1	M1	1.365				
2	Strength 1 - Truck (min) ...		Y		1	1.25	2	1.35	3	.9	5	.75	6	2.1	M1	1.365				
3	Strength 1 - Tandem (ma...		Y		1	1.25	2	1.35	3	1.5	5	1.5	6	2.1	M2	1.365				
4	Strength 1 - Tandem (min...		Y		1	1.25	2	1.35	3	.9	5	.75	6	2.1	M2	1.365				
5																				
6	Strength 1 - Truck (max) ...		Y		1	1.25	2	1.35	4	1.5	5	1.5	6	2.1	M1	1.365				
7	Strength 1 - Truck (min) ...		Y		1	1.25	2	1.35	4	.9	5	.75	6	2.1	M1	1.365				
8	Strength 1 - Tandem (ma...		Y		1	1.25	2	1.35	4	1.5	5	1.5	6	2.1	M2	1.365				
9	Strength 1 - Tandem (min...		Y		1	1.25	2	1.35	4	.9	5	.75	6	2.1	M2	1.365				
10																				
11	Service 1 - Truck wo hydro		Y		1	1	2	1	3	1	5	1	6	1.2	M1	.78				
12	Service 1 - Tandem wo h...		Y		1	1	2	1	3	1	5	1	6	1.2	M2	.78				
13																				
14	Service 1 - Truck w hydro		Y		1	1	2	1	4	1	5	1	6	1.2	M1	.78				
15	Service 1 - Tandem w hy...		Y		1	1	2	1	4	1	5	1	6	1.2	M2	.78				
16																				
17	HL-93 Truck	Yes	Y		M1	.78	6	1.2												
18	HL-93 Tandem	Yes	Y		M2	.78	6	1.2												
19	H-20		Y		M3	.78	6	1.2												
20	3S2		Y		M4	.78	6	1.2												
21	6 Axle Trailer		Y		M5	.78	6	1.2												
22	3 Axle Straight		Y		M6	.78	6	1.2												
23	4 Axle Straight		Y		M7	.78	6	1.2												
24	5 Axle Semi		Y		M8	.78	6	1.2												
25																				
26	DL		Y		1	1.25														
27	EL		Y		2	1	4	1												
28	LL - Truck		Y		M1	.5	6	1												
29	LL - Tandem		Y		M2	.5	6	1												

Member Distributed Loads (BLC 2 : Earth Vertical)

	Member Label	Direction	Start Magnitude[k/ft,d...	End Magnitude[k/ft,d...	Start Location[ft,%]	End Location[ft,%]
1	M3	Y	-.857	-.857	0	0

Member Distributed Loads (BLC 3 : Earth Horizontal)

Member Label	Direction	Start Magnitude[k/ft,d...	End Magnitude[k/ft,d...	Start Location[ft,%]	End Location[ft,%]

Member Distributed Loads (BLC 3 : Earth Horizontal) (Continued)

	Member Label	Direction	Start Magnitude[k/ft,d..	End Magnitude[k/ft,d...	Start Location[ft,%]	End Location[ft,%]
1	M1	X	2.441	.351	0	0
2	M2	X	-.351	-2.441	0	0

Member Distributed Loads (BLC 4 : Earth Horizontal w/ Hydro)

	Member Label	Direction	Start Magnitude[k/ft,d..	End Magnitude[k/ft,d...	Start Location[ft,%]	End Location[ft,%]
1	M2	X	-.351	-3.781	0	0
2	M1	X	3.781	.351	0	0

Member Distributed Loads (BLC 5 : Surcharge)

	Member Label	Direction	Start Magnitude[k/ft,d..	End Magnitude[k/ft,d...	Start Location[ft,%]	End Location[ft,%]
1	M1	X	.771	.771	0	0
2	M2	X	-.771	-.771	0	0

Member Distributed Loads (BLC 6 : Lane Load)

	Member Label	Direction	Start Magnitude[k/ft,d..	End Magnitude[k/ft,d...	Start Location[ft,%]	End Location[ft,%]
1	M3	Y	-.269	-.269	0	0

Moving Loads

	Tag	Pattern	Increm...	Both W...	1st Joint	2nd Jo...	3rd Joint	4th Joint	5th Joint	6th Joint	7th Joint	8th Joint	9th Joint	10th J...
1	M1	HL-93TRUCK	.5	Yes	N2	N3								
2	M2	HL-93TANDEM	.5	Yes	N2	N3								
3	M3	H20	.5	Yes	N2	N3								
4	M4	TYPE3-S2	.5	Yes	N2	N3								
5	M5	6AXLETRAILER	.5	Yes	N2	N3								
6	M6	3A_STR	.5	Yes	N2	N3								
7	M7	4A_STR	.5	Yes	N2	N3								
8	M8	5A_SEMI	.5	Yes	N2	N3								

Moving Load Patterns

Pattern Label	Load (k)	Direction	Distance (ft)
HL-93TRUCK	-8	Y	0
	-32	Y	14
	-32	Y	28
HL-93TANDEM	-25	Y	0
	-25	Y	4
H20	-8	V	0
	-32	V	14
TYPE3-S2	-10	V	0
	-15.5	V	11
	-15.5	V	4
	-15.5	V	22
	-15.5	V	4
6AXLETRAILER	-12	Y	0
	-24	Y	11
	-24	Y	15.67
	-24	Y	46.67
	-24	Y	50.67
	-24	Y	54.67

Moving Load Patterns

Pattern Label	Load (k)	Direction	Distance (ft)
3A_STR	-12	Y	0
	-24	Y	15
	-24	Y	19
4A_STR	-12	Y	0
	-19	Y	15
	-19	Y	19
	-19	Y	23
5A_SEMI	-8	Y	0
	-17	Y	11
	-17	Y	15
	-17	Y	31
	-17	Y	35

Envelope Member Section Forces

	Member	Sec		Axial[k]	LC	y Shear[k]	LC	z Shear[k]	LC	Torque[k-ft]	LC	y-y Momen...	LC	z-z Momen...	LC
1	M1	1	max	31.991	22	-1.981	22	0	22	0	22	0	22	0	22
2			min	5.326	22	-8.965	22	0	22	0	22	0	22	0	22
3		2	max	31.991	22	-1.981	22	0	22	0	22	0	22	16.995	22
4			min	5.326	22	-8.965	22	0	22	0	22	0	22	3.756	22
5		3	max	31.991	22	-1.981	22	0	22	0	22	0	22	33.991	22
6			min	5.326	22	-8.965	22	0	22	0	22	0	22	7.513	22
7		4	max	31.991	22	-1.981	22	0	22	0	22	0	22	50.986	22
8			min	5.326	22	-8.965	22	0	22	0	22	0	22	11.269	22
9		5	max	31.991	22	-1.981	22	0	22	0	22	0	22	67.982	22
10			min	5.326	22	-8.965	22	0	22	0	22	0	22	15.025	22
11	M2	1	max	31.991	22	-1.981	22	0	22	0	22	0	22	-15.025	22
12			min	5.326	22	-8.965	22	0	22	0	22	0	22	-67.982	22
13		2	max	31.991	22	-1.981	22	0	22	0	22	0	22	-11.269	22
14			min	5.326	22	-8.965	22	0	22	0	22	0	22	-50.986	22
15		3	max	31.991	22	-1.981	22	0	22	0	22	0	22	-7.513	22
16			min	5.326	22	-8.965	22	0	22	0	22	0	22	-33.991	22
17		4	max	31.991	22	-1.981	22	0	22	0	22	0	22	-3.756	22
18			min	5.326	22	-8.965	22	0	22	0	22	0	22	-16.995	22
19		5	max	31.991	22	-1.981	22	0	22	0	22	0	22	0	22
20			min	5.326	22	-8.965	22	0	22	0	22	0	22	0	22
21	M3	1	max	8.965	22	31.423	22	0	22	0	22	0	22	67.982	22
22			min	1.981	22	5.326	22	0	22	0	22	0	22	15.025	22
23		2	max	8.965	22	19.681	22	0	22	0	22	0	22	-17.901	22
24			min	1.981	22	-1.88	22	0	22	0	22	0	22	-108.309	22
25		3	max	8.965	22	9.361	22	0	22	0	22	0	22	-28.915	22
26			min	1.981	22	-9.787	22	0	22	0	22	0	22	-147.33	22
27		4	max	8.965	22	1.88	22	0	22	0	22	0	22	-17.901	22
28			min	1.981	22	-19.681	22	0	22	0	22	0	22	-108.309	22
29		5	max	8.965	22	-5.326	22	0	22	0	22	0	22	67.982	22
30			min	1.981	22	-31.423	22	0	22	0	22	0	22	15.025	22

Envelope Member Section Deflections

	Member	Sec		x [in]	LC	y [in]	LC	z [in]	LC	x Rotate [r...	LC	(n) L/y Ratio	LC	(n) L/z Ratio	LC
1	M1	1	max	0	22	0	22	0	22	0	22	NC	22	NC	22
2			min	0	22	0	22	0	22	0	22	NC	22	NC	22
3		2	max	0	22	.031	22	0	22	0	22	3569.988	22	NC	22
4			min	0	22	.005	22	0	22	0	22	NC	22	NC	22

Envelope Member Section Deflections (Continued)

	Member	Sec		x [in]	LC	y [in]	LC	z [in]	LC	x Rotate [r...	LC	(n) L/y Ratio	LC	(n) L/z Ratio	LC
5		3	max	0	22	.051	22	0	22	0	22	2261.502	22	NC	22
6			min	0	22	.005	22	0	22	0	22	NC	22	NC	22
7		4	max	0	22	.054	22	0	22	0	22	3421.422	22	NC	22
8			min	0	22	-.006	22	0	22	0	22	NC	22	NC	22
9		5	max	0	22	.038	22	0	22	0	22	NC	22	NC	22
10			min	-.001	22	-.038	22	0	22	0	22	2387.311	22	NC	22
11	M2	1	max	.001	22	.038	22	0	22	0	22	2387.311	22	NC	22
12			min	0	22	-.038	22	0	22	0	22	NC	22	NC	22
13		2	max	0	22	.006	22	0	22	0	22	NC	22	NC	22
14			min	0	22	-.054	22	0	22	0	22	3421.422	22	NC	22
15		3	max	0	22	-.005	22	0	22	0	22	NC	22	NC	22
16			min	0	22	-.051	22	0	22	0	22	2261.502	22	NC	22
17		4	max	0	22	-.005	22	0	22	0	22	NC	22	NC	22
18			min	0	22	-.031	22	0	22	0	22	3569.988	22	NC	22
19		5	max	0	22	0	22	0	22	0	22	NC	22	NC	22
20			min	0	22	0	22	0	22	0	22	NC	22	NC	22
21	M3	1	max	.038	22	0	22	0	22	0	22	NC	22	NC	22
22			min	-.038	22	-.001	22	0	22	0	22	NC	22	NC	22
23		2	max	.038	22	-.061	22	0	22	0	22	6491.82	22	NC	22
24			min	-.038	22	-.272	22	0	22	0	22	1459.938	22	NC	22
25		3	max	.038	22	-.089	22	0	22	0	22	4456.014	22	NC	22
26			min	-.038	22	-.383	22	0	22	0	22	1037.145	22	NC	22
27		4	max	.038	22	-.061	22	0	22	0	22	6491.82	22	NC	22
28			min	-.038	22	-.272	22	0	22	0	22	1459.938	22	NC	22
29		5	max	.038	22	0	22	0	22	0	22	NC	22	NC	22
30			min	-.038	22	-.001	22	0	22	0	22	NC	22	NC	22

4 Axle Load Rating Output

Basic Load Cases

	BLC Description	Category	X Gravity	Y Gravity	Z Gravity	Joint	Point	Distribut...	Area(Me...	Surface(...
1	DL	None		-1						
2	Earth Vertical	None						1		
3	Earth Horizontal	None						2		
4	Earth Horizontal w/ Hydro	None						2		
5	Surcharge	None						2		
6	Lane Load	None						1		
16	HL-93 Truck	None								
17	HL-93 Tandem	None								
18	H-20	None								
19	3S2	None								
20	6 Axle Trailer	None								
21	3 Axle Straight	None								
22	4 Axle Straight	None								
23	5 Axle Semi	None								

Load Combinations

	Description	Solve	PD...	SR...	BLC	Fact...	BLC	Fact...	BLC	Fact...	BLC	Fact...	BLC	Fact...	BLC	Fact...	BLC	Fact...	BLC	Fact...
1	Strength 1 - Truck (max) ...		Y		1	1.25	2	1.35	3	1.5	5	1.5	6	2.1	M1	1.365				
2	Strength 1 - Truck (min) ...		Y		1	1.25	2	1.35	3	.9	5	.75	6	2.1	M1	1.365				
3	Strength 1 - Tandem (ma...		Y		1	1.25	2	1.35	3	1.5	5	1.5	6	2.1	M2	1.365				
4	Strength 1 - Tandem (min...		Y		1	1.25	2	1.35	3	.9	5	.75	6	2.1	M2	1.365				
5																				
6	Strength 1 - Truck (max) ...		Y		1	1.25	2	1.35	4	1.5	5	1.5	6	2.1	M1	1.365				
7	Strength 1 - Truck (min) ...		Y		1	1.25	2	1.35	4	.9	5	.75	6	2.1	M1	1.365				
8	Strength 1 - Tandem (ma...		Y		1	1.25	2	1.35	4	1.5	5	1.5	6	2.1	M2	1.365				
9	Strength 1 - Tandem (min...		Y		1	1.25	2	1.35	4	.9	5	.75	6	2.1	M2	1.365				
10																				
11	Service 1 - Truck wo hydro		Y		1	1	2	1	3	1	5	1	6	1.2	M1	.78				
12	Service 1 - Tandem wo h...		Y		1	1	2	1	3	1	5	1	6	1.2	M2	.78				
13																				
14	Service 1 - Truck w hydro		Y		1	1	2	1	4	1	5	1	6	1.2	M1	.78				
15	Service 1 - Tandem w hy...		Y		1	1	2	1	4	1	5	1	6	1.2	M2	.78				
16																				
17	HL-93 Truck	Yes	Y		M1	.78	6	1.2												
18	HL-93 Tandem	Yes	Y		M2	.78	6	1.2												
19	H-20		Y		M3	.78	6	1.2												
20	3S2		Y		M4	.78	6	1.2												
21	6 Axle Trailer		Y		M5	.78	6	1.2												
22	3 Axle Straight		Y		M6	.78	6	1.2												
23	4 Axle Straight		Y		M7	.78	6	1.2												
24	5 Axle Semi		Y		M8	.78	6	1.2												
25																				
26	DL		Y		1	1.25														
27	EL		Y		2	1	4	1												
28	LL - Truck		Y		M1	.5	6	1												
29	LL - Tandem		Y		M2	.5	6	1												

Member Distributed Loads (BLC 2 : Earth Vertical)

	Member Label	Direction	Start Magnitude[k/ft,d...	End Magnitude[k/ft,d...	Start Location[ft,%]	End Location[ft,%]
1	M3	Y	-.857	-.857	0	0

Member Distributed Loads (BLC 3 : Earth Horizontal)

	Member Label	Direction	Start Magnitude[k/ft,d...	End Magnitude[k/ft,d...	Start Location[ft,%]	End Location[ft,%]

Member Distributed Loads (BLC 3 : Earth Horizontal) (Continued)

	Member Label	Direction	Start Magnitude[k/ft,d..	End Magnitude[k/ft,d...	Start Location[ft,%]	End Location[ft,%]
1	M1	X	2.441	.351	0	0
2	M2	X	-.351	-2.441	0	0

Member Distributed Loads (BLC 4 : Earth Horizontal w/ Hydro)

	Member Label	Direction	Start Magnitude[k/ft,d..	End Magnitude[k/ft,d...	Start Location[ft,%]	End Location[ft,%]
1	M2	X	-.351	-3.781	0	0
2	M1	X	3.781	.351	0	0

Member Distributed Loads (BLC 5 : Surcharge)

	Member Label	Direction	Start Magnitude[k/ft,d..	End Magnitude[k/ft,d...	Start Location[ft,%]	End Location[ft,%]
1	M1	X	.771	.771	0	0
2	M2	X	-.771	-.771	0	0

Member Distributed Loads (BLC 6 : Lane Load)

	Member Label	Direction	Start Magnitude[k/ft,d..	End Magnitude[k/ft,d...	Start Location[ft,%]	End Location[ft,%]
1	M3	Y	-.269	-.269	0	0

Moving Loads

	Tag	Pattern	Increm...	Both W...	1st Joint	2nd Jo...	3rd Joint	4th Joint	5th Joint	6th Joint	7th Joint	8th Joint	9th Joint	10th J...
1	M1	HL-93TRUCK	.5	Yes	N2	N3								
2	M2	HL-93TANDEM	.5	Yes	N2	N3								
3	M3	H20	.5	Yes	N2	N3								
4	M4	TYPE3-S2	.5	Yes	N2	N3								
5	M5	6AXLETRAILER	.5	Yes	N2	N3								
6	M6	3A_STR	.5	Yes	N2	N3								
7	M7	4A_STR	.5	Yes	N2	N3								
8	M8	5A_SEMI	.5	Yes	N2	N3								

Moving Load Patterns

Pattern Label	Load (k)	Direction	Distance (ft)
HL-93TRUCK	-8	Y	0
	-32	Y	14
	-32	Y	28
HL-93TANDEM	-25	Y	0
	-25	Y	4
H20	-8	V	0
	-32	V	14
TYPE3-S2	-10	V	0
	-15.5	V	11
	-15.5	V	4
	-15.5	V	22
	-15.5	V	4
6AXLETRAILER	-12	Y	0
	-24	Y	11
	-24	Y	15.67
	-24	Y	46.67
	-24	Y	50.67
	-24	Y	54.67

Moving Load Patterns

Pattern Label	Load (k)	Direction	Distance (ft)
3A_STR	-12	Y	0
	-24	Y	15
	-24	Y	19
4A_STR	-12	Y	0
	-19	Y	15
	-19	Y	19
	-19	Y	23
5A_SEMI	-8	Y	0
	-17	Y	11
	-17	Y	15
	-17	Y	31
	-17	Y	35

Envelope Member Section Forces

	Member	Sec		Axial[k]	LC	y Shear[k]	LC	z Shear[k]	LC	Torque[k-ft]	LC	y-y Momen...	LC	z-z Momen...	LC
1	M1	1	max	26.435	23	-1.981	23	0	23	0	23	0	23	0	23
2			min	5.326	23	-7.51	23	0	23	0	23	0	23	0	23
3		2	max	26.435	23	-1.981	23	0	23	0	23	0	23	14.237	23
4			min	5.326	23	-7.51	23	0	23	0	23	0	23	3.756	23
5		3	max	26.435	23	-1.981	23	0	23	0	23	0	23	28.475	23
6			min	5.326	23	-7.51	23	0	23	0	23	0	23	7.513	23
7		4	max	26.435	23	-1.981	23	0	23	0	23	0	23	42.712	23
8			min	5.326	23	-7.51	23	0	23	0	23	0	23	11.269	23
9		5	max	26.435	23	-1.981	23	0	23	0	23	0	23	56.949	23
10			min	5.326	23	-7.51	23	0	23	0	23	0	23	15.026	23
11	M2	1	max	26.435	23	-1.981	23	0	23	0	23	0	23	-15.026	23
12			min	5.326	23	-7.51	23	0	23	0	23	0	23	-56.949	23
13		2	max	26.435	23	-1.981	23	0	23	0	23	0	23	-11.269	23
14			min	5.326	23	-7.51	23	0	23	0	23	0	23	-42.712	23
15		3	max	26.435	23	-1.981	23	0	23	0	23	0	23	-7.513	23
16			min	5.326	23	-7.51	23	0	23	0	23	0	23	-28.475	23
17		4	max	26.435	23	-1.981	23	0	23	0	23	0	23	-3.756	23
18			min	5.326	23	-7.51	23	0	23	0	23	0	23	-14.237	23
19		5	max	26.435	23	-1.981	23	0	23	0	23	0	23	0	23
20			min	5.326	23	-7.51	23	0	23	0	23	0	23	0	23
21	M3	1	max	7.51	23	25.986	23	0	23	0	23	0	23	56.949	23
22			min	1.981	23	5.326	23	0	23	0	23	0	23	15.026	23
23		2	max	7.51	23	16.359	23	0	23	0	23	0	23	-17.907	23
24			min	1.981	23	-.933	23	0	23	0	23	0	23	-90.722	23
25		3	max	7.51	23	7.47	23	0	23	0	23	0	23	-28.915	23
26			min	1.981	23	-7.837	23	0	23	0	23	0	23	-123.407	23
27		4	max	7.51	23	.933	23	0	23	0	23	0	23	-17.907	23
28			min	1.981	23	-16.359	23	0	23	0	23	0	23	-90.722	23
29		5	max	7.51	23	-5.326	23	0	23	0	23	0	23	56.949	23
30			min	1.981	23	-25.986	23	0	23	0	23	0	23	15.026	23

Envelope Member Section Deflections

	Member	Sec		x [in]	LC	y [in]	LC	z [in]	LC	x Rotate [r...	LC	(n) L/y Ratio	LC	(n) L/z Ratio	LC
1	M1	1	max	0	23	0	23	0	23	0	23	NC	23	NC	23
2			min	0	23	0	23	0	23	0	23	NC	23	NC	23
3		2	max	0	23	.026	23	0	23	0	23	4054.645	23	NC	23
4			min	0	23	.005	23	0	23	0	23	NC	23	NC	23

Envelope Member Section Deflections (Continued)

	Member	Sec		x [in]	LC	y [in]	LC	z [in]	LC	x Rotate [r...	LC	(n) L/y Ratio	LC	(n) L/z Ratio	LC
5		3	max	0	23	.043	23	0	23	0	23	2534.153	23	NC	23
6			min	0	23	.006	23	0	23	0	23	NC	23	NC	23
7		4	max	0	23	.044	23	0	23	0	23	3976.277	23	NC	23
8			min	0	23	-.003	23	0	23	0	23	NC	23	NC	23
9		5	max	0	23	.03	23	0	23	0	23	NC	23	NC	23
10			min	-.001	23	-.03	23	0	23	0	23	3017.355	23	NC	23
11	M2	1	max	.001	23	.03	23	0	23	0	23	3017.355	23	NC	23
12			min	0	23	-.03	23	0	23	0	23	NC	23	NC	23
13		2	max	0	23	.003	23	0	23	0	23	NC	23	NC	23
14			min	0	23	-.044	23	0	23	0	23	3976.277	23	NC	23
15		3	max	0	23	-.006	23	0	23	0	23	NC	23	NC	23
16			min	0	23	-.043	23	0	23	0	23	2534.153	23	NC	23
17		4	max	0	23	-.005	23	0	23	0	23	NC	23	NC	23
18			min	0	23	-.026	23	0	23	0	23	4054.645	23	NC	23
19		5	max	0	23	0	23	0	23	0	23	NC	23	NC	23
20			min	0	23	0	23	0	23	0	23	NC	23	NC	23
21	M3	1	max	.03	23	0	23	0	23	0	23	NC	23	NC	23
22			min	-.03	23	-.001	23	0	23	0	23	NC	23	NC	23
23		2	max	.03	23	-.061	23	0	23	0	23	6491.82	23	NC	23
24			min	-.03	23	-.237	23	0	23	0	23	1679.04	23	NC	23
25		3	max	.03	23	-.089	23	0	23	0	23	4456.014	23	NC	23
26			min	-.03	23	-.334	23	0	23	0	23	1189.757	23	NC	23
27		4	max	.03	23	-.061	23	0	23	0	23	6491.82	23	NC	23
28			min	-.03	23	-.237	23	0	23	0	23	1679.04	23	NC	23
29		5	max	.03	23	0	23	0	23	0	23	NC	23	NC	23
30			min	-.03	23	-.001	23	0	23	0	23	NC	23	NC	23

5 Axle Load Rating Output

Basic Load Cases

	BLC Description	Category	X Gravity	Y Gravity	Z Gravity	Joint	Point	Distribut...	Area(Me...	Surface(...
1	DL	None		-1						
2	Earth Vertical	None						1		
3	Earth Horizontal	None						2		
4	Earth Horizontal w/ Hydro	None						2		
5	Surcharge	None						2		
6	Lane Load	None						1		
16	HL-93 Truck	None								
17	HL-93 Tandem	None								
18	H-20	None								
19	3S2	None								
20	6 Axle Trailer	None								
21	3 Axle Straight	None								
22	4 Axle Straight	None								
23	5 Axle Semi	None								

Load Combinations

	Description	Solve	PD...	SR...	BLC	Fact...	BLC	Fact...	BLC	Fact...	BLC	Fact...	BLC	Fact...	BLC	Fact...	BLC	Fact...	BLC	Fact...
1	Strength 1 - Truck (max) ...		Y		1	1.25	2	1.35	3	1.5	5	1.5	6	2.1	M1	1.365				
2	Strength 1 - Truck (min) ...		Y		1	1.25	2	1.35	3	.9	5	.75	6	2.1	M1	1.365				
3	Strength 1 - Tandem (ma...		Y		1	1.25	2	1.35	3	1.5	5	1.5	6	2.1	M2	1.365				
4	Strength 1 - Tandem (min...		Y		1	1.25	2	1.35	3	.9	5	.75	6	2.1	M2	1.365				
5																				
6	Strength 1 - Truck (max) ...		Y		1	1.25	2	1.35	4	1.5	5	1.5	6	2.1	M1	1.365				
7	Strength 1 - Truck (min) ...		Y		1	1.25	2	1.35	4	.9	5	.75	6	2.1	M1	1.365				
8	Strength 1 - Tandem (ma...		Y		1	1.25	2	1.35	4	1.5	5	1.5	6	2.1	M2	1.365				
9	Strength 1 - Tandem (min...		Y		1	1.25	2	1.35	4	.9	5	.75	6	2.1	M2	1.365				
10																				
11	Service 1 - Truck wo hydro		Y		1	1	2	1	3	1	5	1	6	1.2	M1	.78				
12	Service 1 - Tandem wo h...		Y		1	1	2	1	3	1	5	1	6	1.2	M2	.78				
13																				
14	Service 1 - Truck w hydro		Y		1	1	2	1	4	1	5	1	6	1.2	M1	.78				
15	Service 1 - Tandem w hy...		Y		1	1	2	1	4	1	5	1	6	1.2	M2	.78				
16																				
17	HL-93 Truck	Yes	Y		M1	.78	6	1.2												
18	HL-93 Tandem	Yes	Y		M2	.78	6	1.2												
19	H-20		Y		M3	.78	6	1.2												
20	3S2		Y		M4	.78	6	1.2												
21	6 Axle Trailer		Y		M5	.78	6	1.2												
22	3 Axle Straight		Y		M6	.78	6	1.2												
23	4 Axle Straight		Y		M7	.78	6	1.2												
24	5 Axle Semi		Y		M8	.78	6	1.2												
25																				
26	DL		Y		1	1.25														
27	EL		Y		2	1	4	1												
28	LL - Truck		Y		M1	.5	6	1												
29	LL - Tandem		Y		M2	.5	6	1												

Member Distributed Loads (BLC 2 : Earth Vertical)

	Member Label	Direction	Start Magnitude[k/ft,d...	End Magnitude[k/ft,d...	Start Location[ft,%]	End Location[ft,%]
1	M3	Y	-.857	-.857	0	0

Member Distributed Loads (BLC 3 : Earth Horizontal)

Member Label	Direction	Start Magnitude[k/ft,d...	End Magnitude[k/ft,d...	Start Location[ft,%]	End Location[ft,%]

Member Distributed Loads (BLC 3 : Earth Horizontal) (Continued)

	Member Label	Direction	Start Magnitude[k/ft,d...	End Magnitude[k/ft,d...	Start Location[ft,%]	End Location[ft,%]
1	M1	X	2.441	.351	0	0
2	M2	X	-.351	-2.441	0	0

Member Distributed Loads (BLC 4 : Earth Horizontal w/ Hydro)

	Member Label	Direction	Start Magnitude[k/ft,d...	End Magnitude[k/ft,d...	Start Location[ft,%]	End Location[ft,%]
1	M2	X	-.351	-3.781	0	0
2	M1	X	3.781	.351	0	0

Member Distributed Loads (BLC 5 : Surcharge)

	Member Label	Direction	Start Magnitude[k/ft,d...	End Magnitude[k/ft,d...	Start Location[ft,%]	End Location[ft,%]
1	M1	X	.771	.771	0	0
2	M2	X	-.771	-.771	0	0

Member Distributed Loads (BLC 6 : Lane Load)

	Member Label	Direction	Start Magnitude[k/ft,d...	End Magnitude[k/ft,d...	Start Location[ft,%]	End Location[ft,%]
1	M3	Y	-.269	-.269	0	0

Moving Loads

	Tag	Pattern	Increm...	Both W...	1st Joint	2nd Jo...	3rd Joint	4th Joint	5th Joint	6th Joint	7th Joint	8th Joint	9th Joint	10th J...
1	M1	HL-93TRUCK	.5	Yes	N2	N3								
2	M2	HL-93TANDEM	.5	Yes	N2	N3								
3	M3	H20	.5	Yes	N2	N3								
4	M4	TYPE3-S2	.5	Yes	N2	N3								
5	M5	6AXLETRAILER	.5	Yes	N2	N3								
6	M6	3A_STR	.5	Yes	N2	N3								
7	M7	4A_STR	.5	Yes	N2	N3								
8	M8	5A_SEMI	.5	Yes	N2	N3								

Moving Load Patterns

Pattern Label	Load (k)	Direction	Distance (ft)
HL-93TRUCK	-8	Y	0
	-32	Y	14
	-32	Y	28
HL-93TANDEM	-25	Y	0
	-25	Y	4
H20	-8	V	0
	-32	V	14
TYPE3-S2	-10	V	0
	-15.5	V	11
	-15.5	V	4
	-15.5	V	22
	-15.5	V	4
6AXLETRAILER	-12	Y	0
	-24	Y	11
	-24	Y	15.67
	-24	Y	46.67
	-24	Y	50.67
	-24	Y	54.67

Moving Load Patterns

Pattern Label	Load (k)	Direction	Distance (ft)
3A_STR	-12	Y	0
	-24	Y	15
	-24	Y	19
4A_STR	-12	Y	0
	-19	Y	15
	-19	Y	19
	-19	Y	23
5A_SEMI	-8	Y	0
	-17	Y	11
	-17	Y	15
	-17	Y	31
	-17	Y	35

Envelope Member Section Forces

	Member	Sec		Axial[k]	LC	y Shear[k]	LC	z Shear[k]	LC	Torque[k-ft]	LC	y-y Momen...	LC	z-z Momen...	LC
1	M1	1	max	27.144	24	-1.981	24	0	24	0	24	0	24	0	24
2			min	5.326	24	-7.852	24	0	24	0	24	0	24	0	24
3		2	max	27.144	24	-1.981	24	0	24	0	24	0	24	14.886	24
4			min	5.326	24	-7.852	24	0	24	0	24	0	24	3.756	24
5		3	max	27.144	24	-1.981	24	0	24	0	24	0	24	29.772	24
6			min	5.326	24	-7.852	24	0	24	0	24	0	24	7.513	24
7		4	max	27.144	24	-1.981	24	0	24	0	24	0	24	44.658	24
8			min	5.326	24	-7.852	24	0	24	0	24	0	24	11.269	24
9		5	max	27.144	24	-1.981	24	0	24	0	24	0	24	59.544	24
10			min	5.326	24	-7.852	24	0	24	0	24	0	24	15.026	24
11	M2	1	max	27.144	24	-1.981	24	0	24	0	24	0	24	-15.026	24
12			min	5.326	24	-7.852	24	0	24	0	24	0	24	-59.544	24
13		2	max	27.144	24	-1.981	24	0	24	0	24	0	24	-11.269	24
14			min	5.326	24	-7.852	24	0	24	0	24	0	24	-44.658	24
15		3	max	27.144	24	-1.981	24	0	24	0	24	0	24	-7.513	24
16			min	5.326	24	-7.852	24	0	24	0	24	0	24	-29.772	24
17		4	max	27.144	24	-1.981	24	0	24	0	24	0	24	-3.756	24
18			min	5.326	24	-7.852	24	0	24	0	24	0	24	-14.886	24
19		5	max	27.144	24	-1.981	24	0	24	0	24	0	24	0	24
20			min	5.326	24	-7.852	24	0	24	0	24	0	24	0	24
21	M3	1	max	7.852	24	26.647	24	0	24	0	24	0	24	59.544	24
22			min	1.982	24	5.326	24	0	24	0	24	0	24	15.026	24
23		2	max	7.852	24	16.325	24	0	24	0	24	0	24	-17.91	24
24			min	1.982	24	-.554	24	0	24	0	24	0	24	-86.332	24
25		3	max	7.852	24	6.832	24	0	24	0	24	0	24	-28.915	24
26			min	1.982	24	-7.234	24	0	24	0	24	0	24	-125.156	24
27		4	max	7.852	24	.554	24	0	24	0	24	0	24	-17.91	24
28			min	1.982	24	-16.325	24	0	24	0	24	0	24	-86.332	24
29		5	max	7.852	24	-5.326	24	0	24	0	24	0	24	59.544	24
30			min	1.982	24	-26.647	24	0	24	0	24	0	24	15.026	24

Envelope Member Section Deflections

	Member	Sec		x [in]	LC	y [in]	LC	z [in]	LC	x Rotate [r...	LC	(n) L/y Ratio	LC	(n) L/z Ratio	LC
1	M1	1	max	0	24	0	24	0	24	0	24	NC	24	NC	24
2			min	0	24	0	24	0	24	0	24	NC	24	NC	24
3		2	max	0	24	.026	24	0	24	0	24	3767.725	24	NC	24
4			min	0	24	.005	24	0	24	0	24	NC	24	NC	24

Envelope Member Section Deflections (Continued)

	Member	Sec		x [in]	LC	y [in]	LC	z [in]	LC	x Rotate [r...	LC	(n) L/y Ratio	LC	(n) L/z Ratio	LC
5		3	max	0	24	.043	24	0	24	0	24	2843.739	24	NC	24
6			min	0	24	.007	24	0	24	0	24	NC	24	NC	24
7		4	max	0	24	.045	24	0	24	0	24	3377.82	24	NC	24
8			min	0	24	-.002	24	0	24	0	24	NC	24	NC	24
9		5	max	0	24	.027	24	0	24	0	24	NC	24	NC	24
10			min	-.001	24	-.027	24	0	24	0	24	3372.77	24	NC	24
11	M2	1	max	.001	24	.027	24	0	24	0	24	3372.77	24	NC	24
12			min	0	24	-.027	24	0	24	0	24	NC	24	NC	24
13		2	max	0	24	.002	24	0	24	0	24	NC	24	NC	24
14			min	0	24	-.045	24	0	24	0	24	3377.82	24	NC	24
15		3	max	0	24	-.007	24	0	24	0	24	NC	24	NC	24
16			min	0	24	-.043	24	0	24	0	24	2843.739	24	NC	24
17		4	max	0	24	-.005	24	0	24	0	24	NC	24	NC	24
18			min	0	24	-.026	24	0	24	0	24	3767.725	24	NC	24
19		5	max	0	24	0	24	0	24	0	24	NC	24	NC	24
20			min	0	24	0	24	0	24	0	24	NC	24	NC	24
21	M3	1	max	.027	24	0	24	0	24	0	24	NC	24	NC	24
22			min	-.027	24	-.001	24	0	24	0	24	NC	24	NC	24
23		2	max	.027	24	-.061	24	0	24	0	24	6491.823	24	NC	24
24			min	-.027	24	-.244	24	0	24	0	24	1625.507	24	NC	24
25		3	max	.027	24	-.089	24	0	24	0	24	4456.014	24	NC	24
26			min	-.027	24	-.349	24	0	24	0	24	1137.572	24	NC	24
27		4	max	.027	24	-.061	24	0	24	0	24	6491.823	24	NC	24
28			min	-.027	24	-.244	24	0	24	0	24	1625.507	24	NC	24
29		5	max	.027	24	0	24	0	24	0	24	NC	24	NC	24
30			min	-.027	24	-.001	24	0	24	0	24	NC	24	NC	24