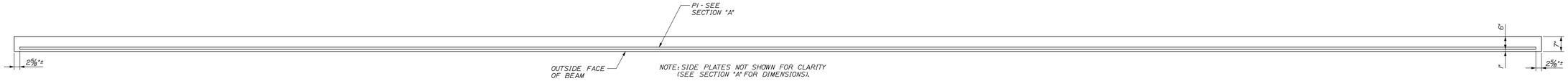

TOP VIEW

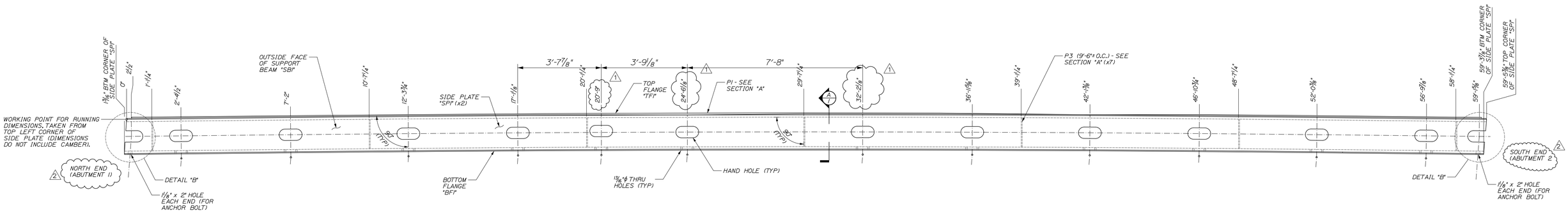

ELEVATION VIEW

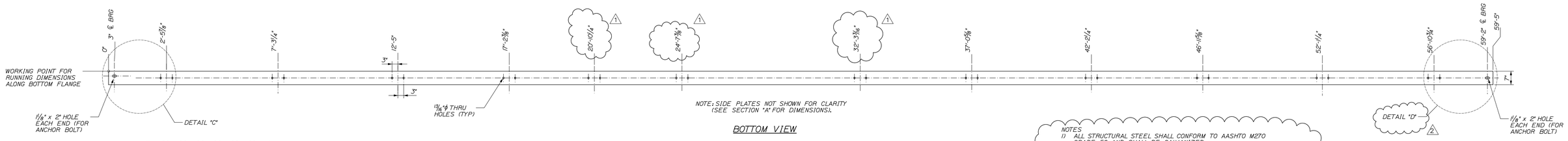

BOTTOM VIEW

SUPPORT BEAM "SB1" DIMENSIONAL PLANS ELEVATION
SCALE: 1/2" = 1'-0"

NOTES
1) ALL STRUCTURAL STEEL SHALL CONFORM TO AASHTO M270 GRADE 50 AND SHALL BE GALVANIZED.
2) ALL MEMBERS MARKED (CVN) MUST MEET THE CHARPY V-NOTCH TESTING REQUIREMENTS. (SEE BILL OF MATERIALS FOR DESIGNATION).

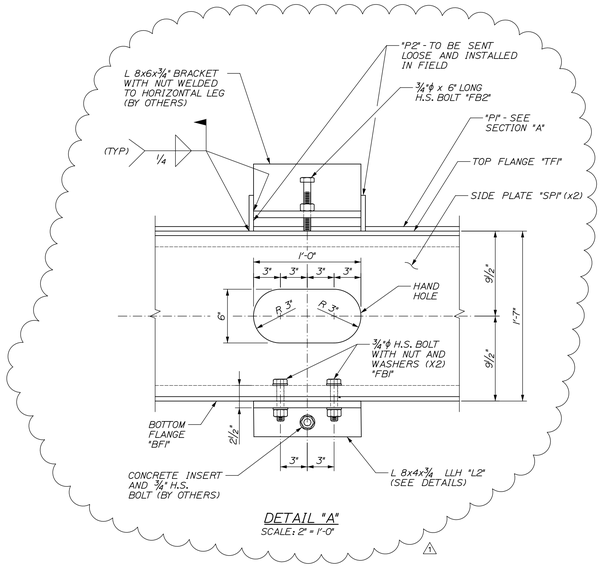

DETAIL "A"
SCALE: 2" = 1'-0"

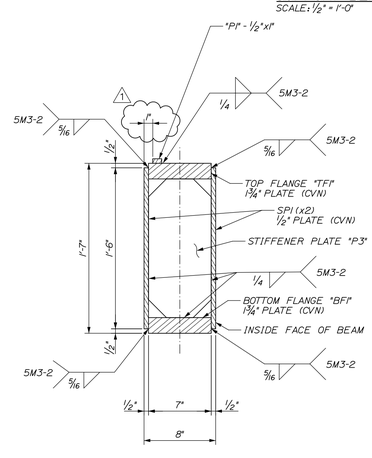

SECTION "A"
SCALE: 1½" = 1'-0"

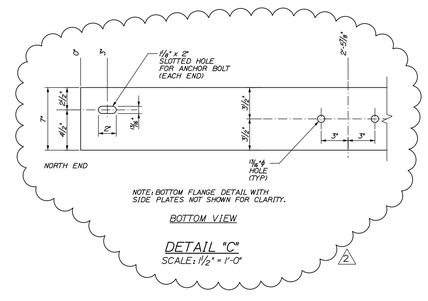

DETAIL "C"
SCALE: 1½" = 1'-0"

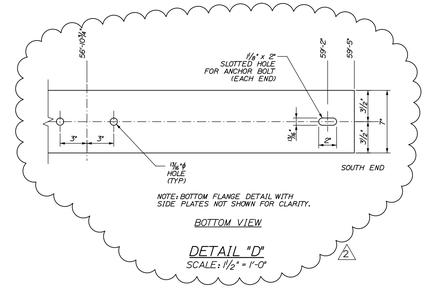

DETAIL "D"
SCALE: 1½" = 1'-0"

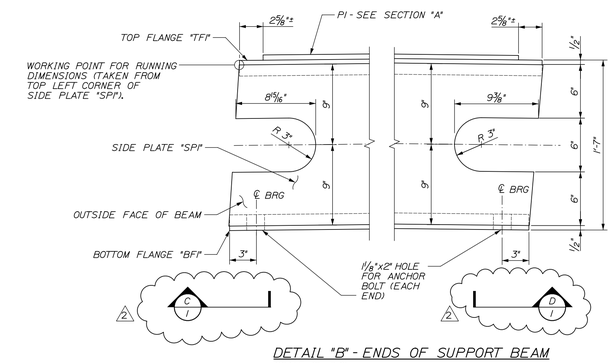

DETAIL "B" - ENDS OF SUPPORT BEAM
SCALE: 2" = 1'-0"

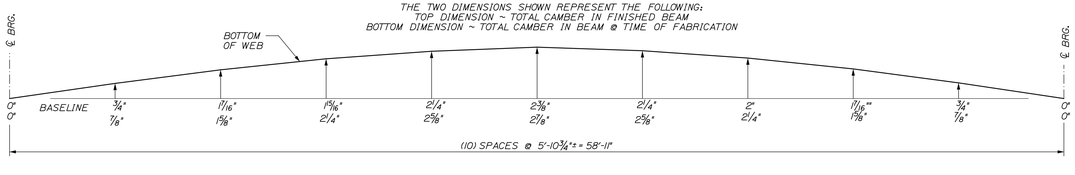

SUPPORT BEAM "SB1" CAMBER
NTS

Bill Of Materials

Ship	Ship Mark	No. PCS	Piece Mark	Description	Length	Remarks	Material
1	SB1			Support Beam			
		1	TF1	Top Flange 1 3/4"x7" (CVN)	59'-5 1/4"		AASHTO M270, Grade 50
		1	BF1	Bottom Flange 1 3/4"x7" (CVN)	59'-5"		AASHTO M270, Grade 50
		2	SP1	Side Plate 1/2"x1'-6" (CVN)	59'-6 9/16"		AASHTO M270, Grade 50
		1	P1	1" Wide x 1/2" Thick	59'-0"		AASHTO M270, Grade 50
		7	P3	7" Wide x 3/8" Thick Stiffener Plate	1'-3 1/2"		AASHTO M270, Grade 50

FINISH					
MATERIAL	SEE BILL OF MATERIALS				
HOLES	SEE PLANS				
ELECTRODES	PER WELD PROCEDURE				
WELDS	PER WELD PROCEDURE	2	MAR 2014	Hole at north end of SB1	DLM
SURFACE PREP SSPC SP10		1	MAR 2014	Addresses Review Comments	DLM
		NO	DATE	DESCRIPTION	BY

REVISIONS

ARC ENTERPRISES, INC.
ADVANCED RESOURCES & CONST. ENTERPRISES, INCORPORATED
P.O. BOX 120 KINGFIELD, ME. 04947
PHONE: (207) 265-2646 – FAX: (207) 265-4054

DRAFTER DLM
DATE JAN. 2014
CHECKED
DATE

SUPPORT BEAM "SB1" PLANS AND DETAILS
MIDDLEBURY, VERMONT
VT ROUTE 125, BRIDGE NO. 13
CC: T BUCK CONSTRUCTION

PROJECT NO. 13-169
DWG. NO. 1

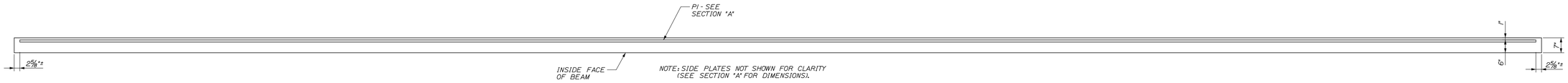

TOP VIEW

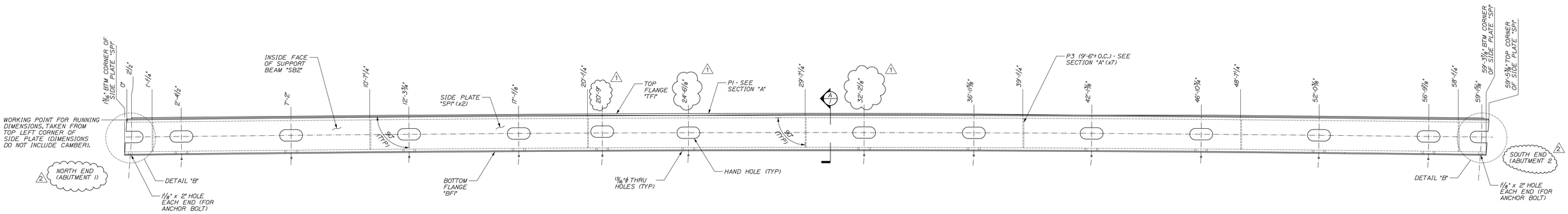

ELEVATION VIEW

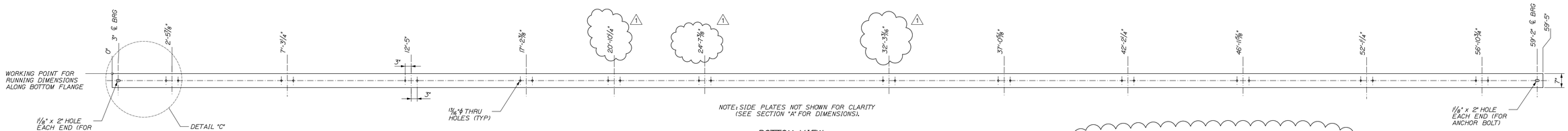

BOTTOM VIEW

SUPPORT BEAM "SB2" DIMENSIONAL PLANS ELEVATION
SCALE: 1/2" = 1'-0"

NOTES
1) ALL STRUCTURAL STEEL SHALL CONFORM TO AASHTO M270 GRADE 50 AND SHALL BE GALVANIZED.
2) ALL MEMBERS MARKED (CVN) MUST MEET THE CHARPY V-NOTCH TESTING REQUIREMENTS. (SEE BILL OF MATERIALS FOR DESIGNATION).

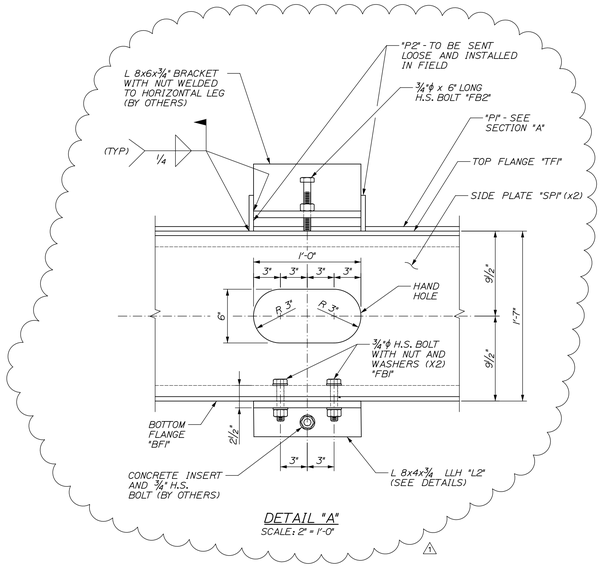

DETAIL "A"
SCALE: 2" = 1'-0"

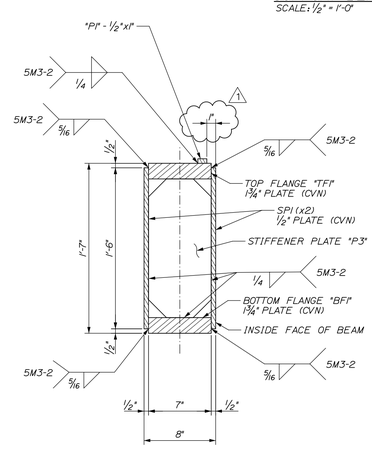

SECTION "A"
SCALE: 1 1/2" = 1'-0"

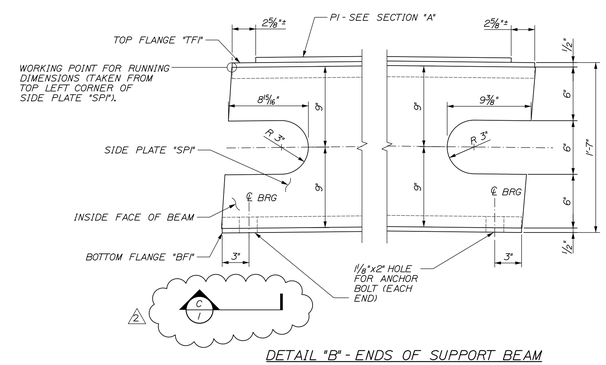

DETAIL "B" - ENDS OF SUPPORT BEAM
SCALE: 2" = 1'-0"

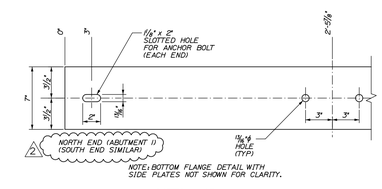

BOTTOM VIEW

DETAIL "C"
SCALE: 1 1/2" = 1'-0"

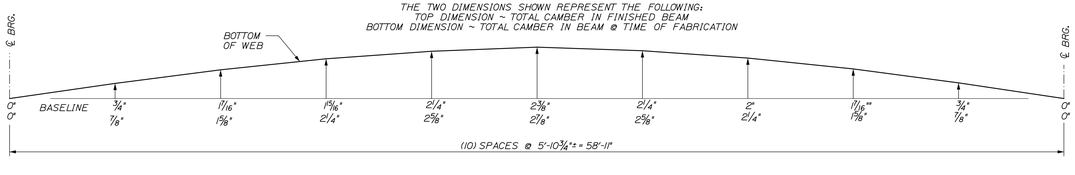

SUPPORT BEAM "SB2" CAMBER
NTS

Bill Of Materials

Ship	Ship Mark	No. PCS	Piece Mark	Description	Length	Remarks	Material
1	SB2			Support Beam			
		1	TF1	Top Flange 1 3/4"x7" (CVN)	59'-5 1/4"		AASHTO M270, Grade 50
		1	BF1	Bottom Flange 1 3/4"x7" (CVN)	59'-5"		AASHTO M270, Grade 50
		2	SP1	Side Plate 1/2"x1'-6" (CVN)	59'-6 9/16"		AASHTO M270, Grade 50
		1	P1	1" Wide x 1/2" Thick	59'-0"		AASHTO M270, Grade 50
		7	P3	7" Wide x 3/8" Thick Stiffener Plate	1'-3 1/2"		AASHTO M270, Grade 50

FINISH					
MATERIAL	SEE BILL OF MATERIALS				
HOLES	SEE PLANS				
ELECTRODES	PER WELD PROCEDURE				
WELDS	PER WELD PROCEDURE	2	MAR 2014	Hole at north end of SB1	DLM
SURFACE PREP SSPC SP10		1	MAR 2014	Addresses Review Comments	DLM
		NO	DATE	DESCRIPTION	BY

REVISIONS

ARC ENTERPRISES, INC.
ADVANCED RESOURCES & CONST. ENTERPRISES, INCORPORATED
P.O. BOX 120 KINGFIELD, ME. 04947
PHONE: (207) 265-2646 – FAX: (207) 265-4054

DRAFTER DLM
DATE JAN. 2014
CHECKED
DATE

SUPPORT BEAM "SB2" PLANS AND DETAILS
MIDDLEBURY, VERMONT
VT ROUTE 125, BRIDGE NO. 13
CC: T BUCK CONSTRUCTION

PROJECT NO. 13-169
DWG. NO. 2

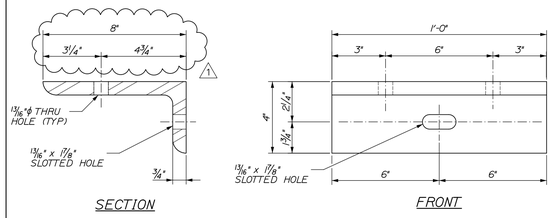

"L2" DETAILS
SCALE: 3" = 1'-0"

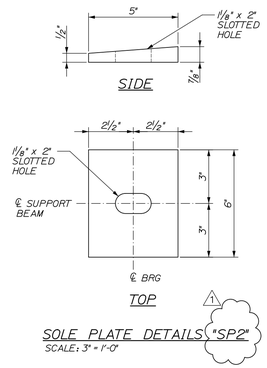

SOLE PLATE DETAILS "SP2"
SCALE: 3" = 1'-0"

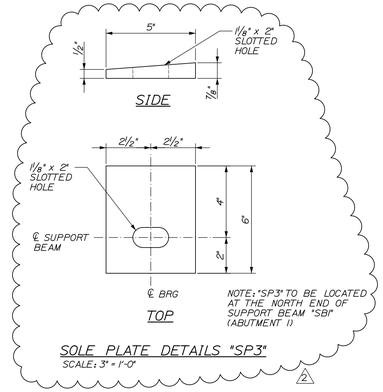

SOLE PLATE DETAILS "SP3"
SCALE: 3" = 1'-0"

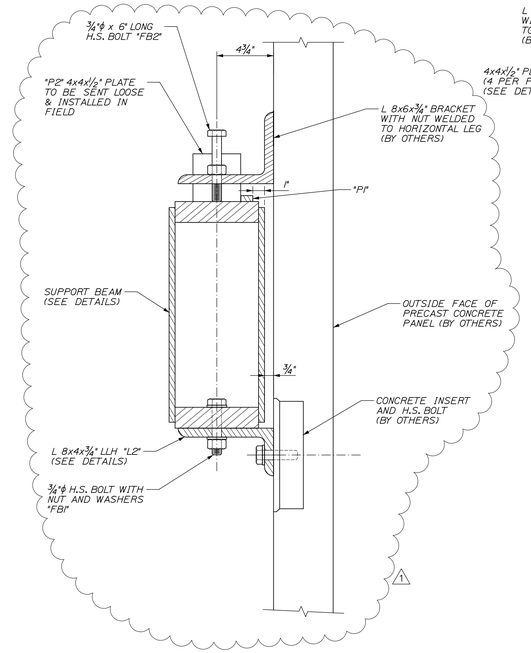

SECTION "B"
SCALE: 2" = 1'-0"

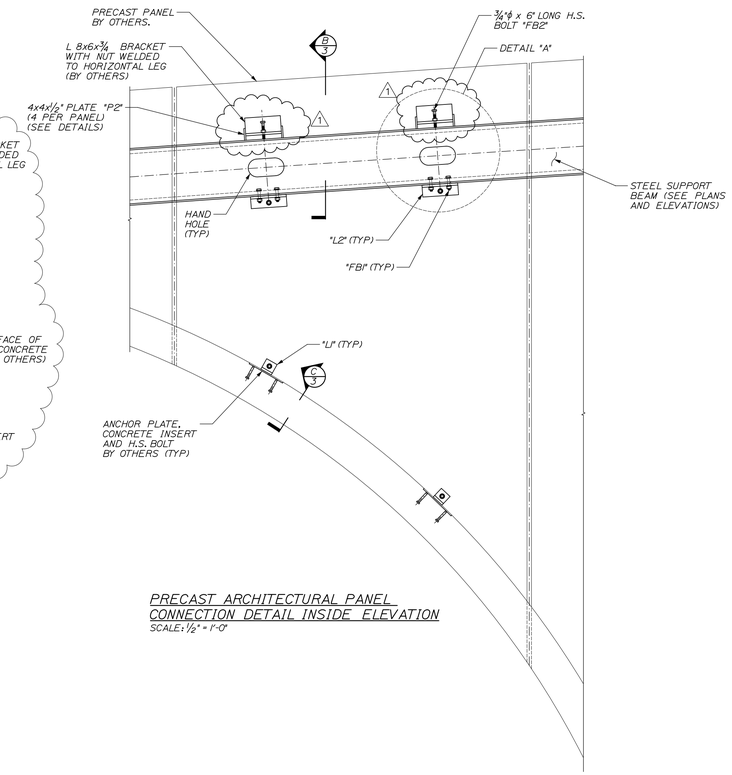

PRECAST ARCHITECTURAL PANEL CONNECTION DETAIL INSIDE ELEVATION
SCALE: ½" = 1'-0"

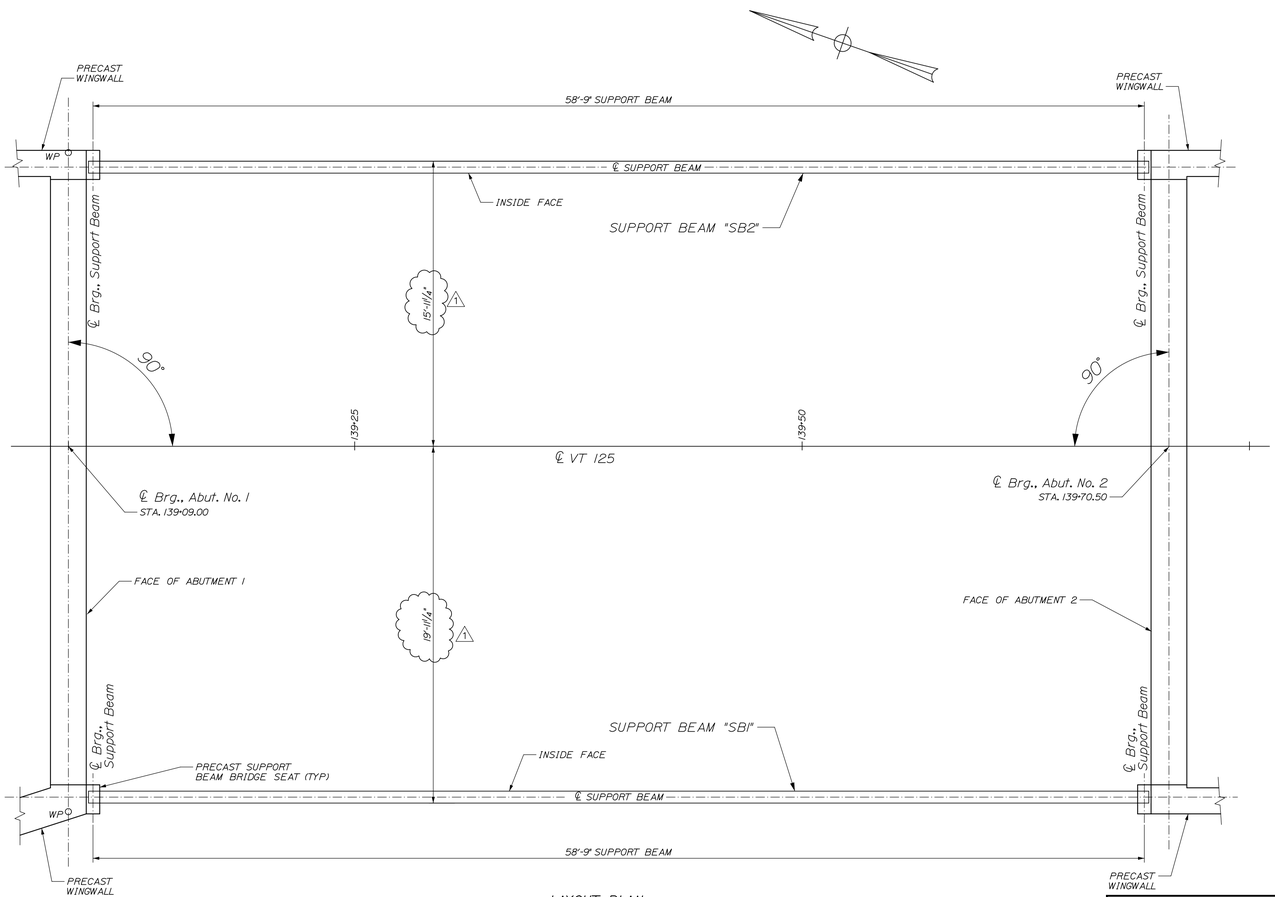

LAYOUT PLAN
SCALE: 1/4" = 1'-0"

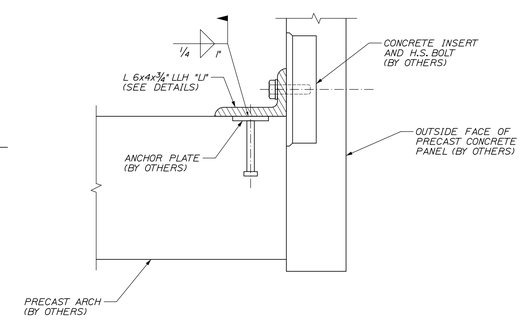

SECTION "C"
SCALE: 2" = 1'-0"

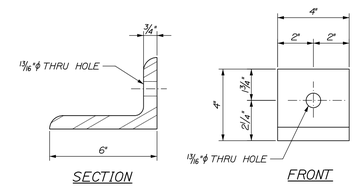

"L1" DETAILS
SCALE: 3" = 1'-0"

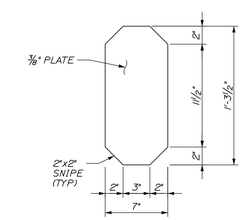

STIFFENER PLATE "P3"
SCALE: 1½" = 1'-0"

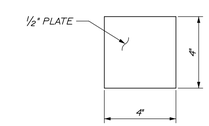

PLATE "P2"
SCALE: 3" = 1'-0"

Bill Of Materials

Ship	Ship Mark	No. PCS	Piece Mark	Description	Length	Remarks	Material
24	L1			L 6x4x3/4	4"	Send Loose to be Field Welded	AASHTO M270, Grade 50
24	L2			L 6x4x3/4	1'-0"	Send Loose to be Field Installed	AASHTO M270, Grade 50
24	P2			1" Wide x 1/2" Thick	4 3/8"	Send Loose to be Field Welded	AASHTO M270, Grade 50
48	FB1			3/4" Dia. H.S. ASTM hex head bolt, Type 1, galvanized w/ nut and 2 washers	4"		
24	FB2			3/4" Dia. H.S. ASTM hex head bolt, Type 1, galvanized	6"		
3	SP2			5" x 7/8" Thick Beveled Sole Plate	6"		AASHTO M270, Grade 50
1	SP3			5" x 7/8" Thick Beveled Sole Plate	6"		AASHTO M270, Grade 50
14	P3			7" Wide x 3/8" Thick Stiffener Plate	1'-3 1/2"		AASHTO M270, Grade 50

FINISH					
MATERIAL	SEE BILL OF MATERIALS				
HOLES	SEE PLANS				
ELECTRODES	PER WELD PROCEDURE				
WELDS	PER WELD PROCEDURE	2	MAR 2014	Hole at north end of SB1	DLM
SURFACE PREP SSPC SP10		1	MAR 2014	Addresses Review Comments	DLM
		NO	DATE	DESCRIPTION	BY

REVISIONS

ARC ENTERPRISES, INC.

ADVANCED RESOURCES & CONST. ENTERPRISES, INCORPORATED
P.O. BOX 120 KINGFIELD, ME. 04947
PHONE: (207) 265-2646 – FAX: (207) 265-4054

DRAFTER DLM
DATE JAN. 2014
CHECKED
DATE

MISCELLANEOUS STEEL
MIDDLEBURY, VERMONT
VT ROUTE 125, BRIDGE NO. 13
SC: T BUCK CONSTRUCTION

PROJECT NO. 13-169
DWG. NO. 3