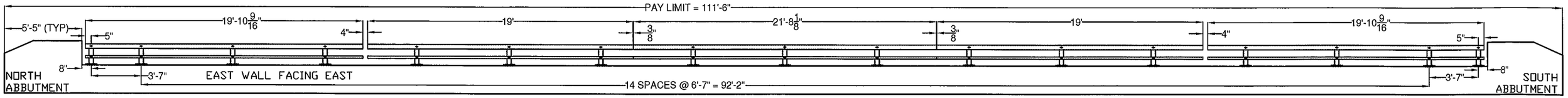

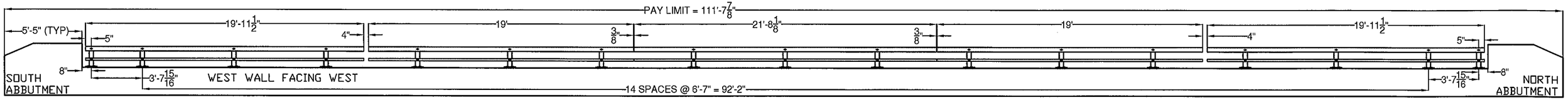

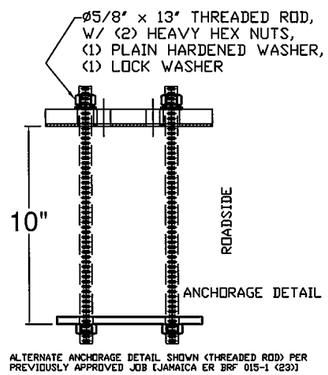

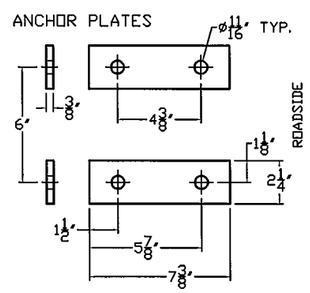

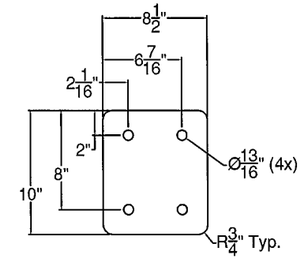

1/8" Fabreeka Pad

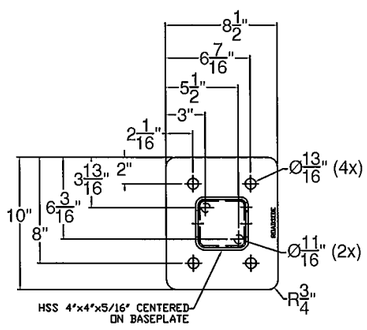

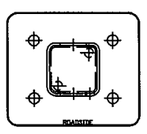

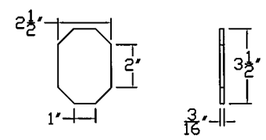

Welded to 4"x3" Tube

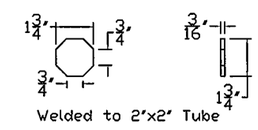

Welded to 2"x2" Tube

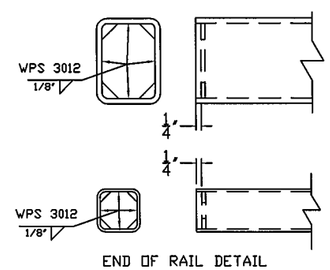

END OF RAIL DETAIL

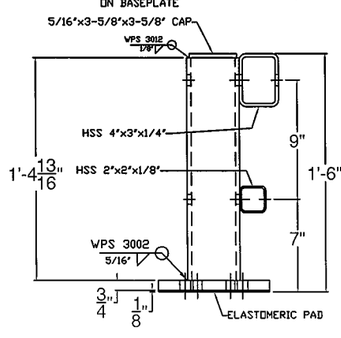

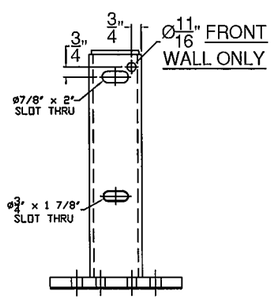

BILL OF MATERIAL

ITEM #	QTY	PART #	DESCRIPTION	ASTM DESIGNATION
1	34	0033.90017	TWO RAIL POST & BASEPLATE ASSEMBLY	A572 Gr. 50
2	2	0033.91070	4" X 3" X 1/4" RAIL @ 19'-10 9/16" W/ END PLATES (EAST RAIL)	A500 Gr. B
3	2	0033.91071	4" X 3" X 1/4" RAIL @ 19'-11 1/2" W/ END PLATES (WEST RAIL)	A500 Gr. B
4	4	0033.91072	4" X 3" X 1/4" RAIL @ 19'-0"	A500 Gr. B
5	2	0033.91073	4" X 3" X 1/4" RAIL @ 21'-8 1/8"	A500 Gr. B
6	2	0033.91074	2" X 2" X 1/8" RAIL @ 19'-10 9/16" W/ END PLATES (EAST RAIL)	A500 Gr. B
7	2	0033.91075	2" X 2" X 1/8" RAIL @ 19'-11 1/2" W/ END PLATES (WEST RAIL)	A500 Gr. B
8	4	0033.91076	2" X 2" X 1/8" RAIL @ 19'-0"	A500 Gr. B
9	2	0033.91077	2" X 2" X 1/8" RAIL @ 21'-8 1/8"	A500 Gr. B
10	4	0033.90069	1-1/2" X 1-1/2" FIX. SPL BAR @ 2' 4"	A572 Gr. 50
11	4	0033.90328	1-1/2" X 1-1/2" EXP. SPL BAR @ 2' 4"	A572 Gr. 50
12	4	0033.90071	2-1/4" X 3-1/4" FIX. SPL. BAR @ 2' 4"	A572 Gr. 50
13	4	0033.90072	2-1/4" X 3-1/4" EXP. SPL. BAR @ 2' 4"	A572 Gr. 50
14	68	0033.00295	3/8" X 2 1/4" X 7 3/8" ANCHOR PLATES	A36
15	136	0042.05813	Ø 5/8" X 13" ANCHOR STUDS	A449
16	272	0080.15901	Ø 5/8" HEAVY HEX NUTS	A563
17	136	0080.15911	Ø 5/8" FLAT WASHERS	F436
18	136	0080.15920	Ø 5/8" LOCK WASHERS	ASME D18.2
19	34	0080.05560	Ø 5/8" X 7 1/2" ROUND HEAD BOLT, NUT, F.W., & L.W.	A325, A563, F436, & ASME D18.2
20	34	0080.05585	Ø 3/4" X 8 1/2" ROUND HEAD BOLT, NUT, F.W., & L.W.	A325, A563, F436, & ASME D18.2
21	32	0080.05275	Ø 5/8" X 3" HEX BOLT, NUT, F.W., & L.W.	A325, A563, F436, & ASME D18.2
22	32	0080.07330	Ø 7/8" X 5 1/2" HEX BOLT, NUT, F.W., & L.W.	A325, A563, F436, & ASME D18.2
23	34	0033.90068	1/8" ELASTOMERIC PAD	D2240

NOTES:

1. ALL WORK AND MATERIALS SHALL CONFORM TO SECTION 525.
2. PRIOR TO GALVANIZING THE ASSEMBLED POST, GRIND ALL EDGES TO A MINIMUM RADIUS OF 1/16".
3. ALL POSTS SHALL BE SET NORMAL TO GRADE.
4. SECTIONS OF RAIL TUBE SHALL BE ATTACHED TO A MINIMUM OF TWO BRIDGE POSTS AND PREFERABLY TO AT LEAST 4 POSTS.
5. HOLES IN RAILS FOR TUBE ATTACHMENT, MAY BE FIELD-DRILLED. HOLES SHALL BE COATED WITH AN APPROVED ZINC-RICH PAINT PRIOR TO INSTALLATION.
6. BOLTS SHALL BE TORQUED SNUG TIGHT (APPROXIMATELY 100 FT-LB).
7. RAIL TUBES SHALL BE ATTACHED USING 3/4" FULL DIAMETER BODY ASTM A449 (TYPE I) ROUND HEAD BOLTS INSERTED THROUGH THE FACE OF THE TUBE.
8. SEE STANDARD DRAWING G-I FOR DETAILS OF DELINEATORS. A DELINEATOR SHALL BE INSTALLED AT 30 FOOT SPACING OR THE NEAREST POST. WHITE IS TO BE INSTALLED ON THE DRIVER'S RIGHT. FOR ONE WAY BRIDGES, YELLOW IS TO BE INSTALLED ON THE DRIVER'S LEFT. PAYMENT FOR DELINEATORS SHALL BE INCIDENTAL TO OTHER ITEMS.
9. AESTHETIC TREATMENT TYPE SHALL BE APPLIED AS SPECIFIED IN THE CONTRACT PLANS. IF NONE IS SPECIFIED IT SHALL NOT BE USED. AESTHETIC TREATMENT DETAILED ON THIS SHEET MAY ALSO BE APPLIED ON THE FASCIA SIDE OF THE RAIL, IF SPECIFIED IN THE CONTRACT PLANS.
10. BRIDGE RAILING SHALL HAVE A RUBBED FINISH IN ACCORDANCE WITH SECTION 501.
11. THIS RAILING MEETS THE REQUIREMENTS FOR A NCHRP REPORT 350 TL-4 SERVICE LEVEL.
12. HOLES FOR MOUNTING DELINEATORS TO BE FIELD DRILLED. HOLES SHALL BE COATED WITH AN APPROVED ZINC-RICH PAINT PRIOR TO INSTALLATION.
13. ALL STEEL COMPONENTS SHALL BE POWDER COATED BLACK AFTER GALVANIZING. COLOR SHALL CONFORM TO FEDERAL STANDARD NO. 595, COLOR CHIP NO. 27038

ITEM #: 900.640 FR Lafayette - MIDDLEBURY, (2014) SHEET 1 OF 2

APPROVED BY:

BRIDGE RAIL DETAILS SHEET

EM13-252, MIDDLEBURY RS 0174 (8)

TOWN OF MIDDLEBURY, ADDISON COUNTY, VT RTE 125 (MAJOR COLLECTOR), BRIDGE NO : 13

REV	NO.	DATE	DESCRIPTION	BY	REV	NO.	DATE	DESCRIPTION	BY

ELDERLEE, INC.
OAKS CORNERS, NEW YORK 14518
E-Mail: dlong@elderlee.com / epeek@elderlee.com
Tel: 315-789-6670 Fax: 315-789-6615

AISC CERTIFIED FABRICATOR

DRAWN	E.P.	3/7/14
CHECKED	D.L.	3/10/14
APPROVED	.	.
SCALE	SCHEMATIC	
DRAWING NO.	FR L - MIDDLEBURY	

TOP RAIL FIXED SPLICE DETAIL

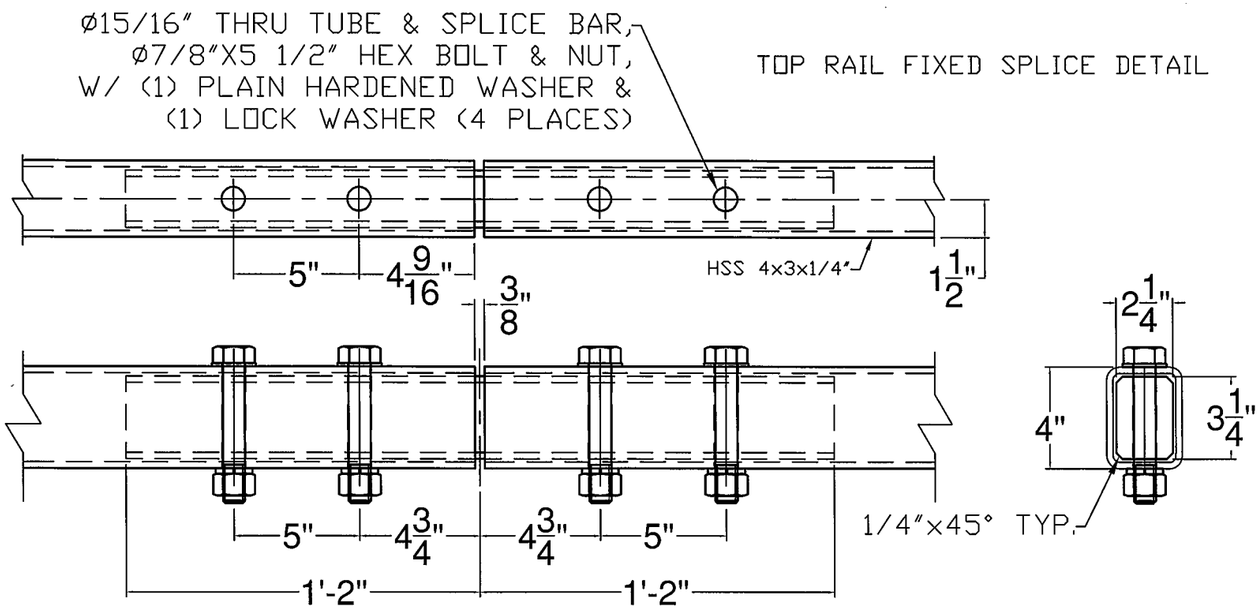

TOP RAIL EXPANSION SPLICE DETAIL

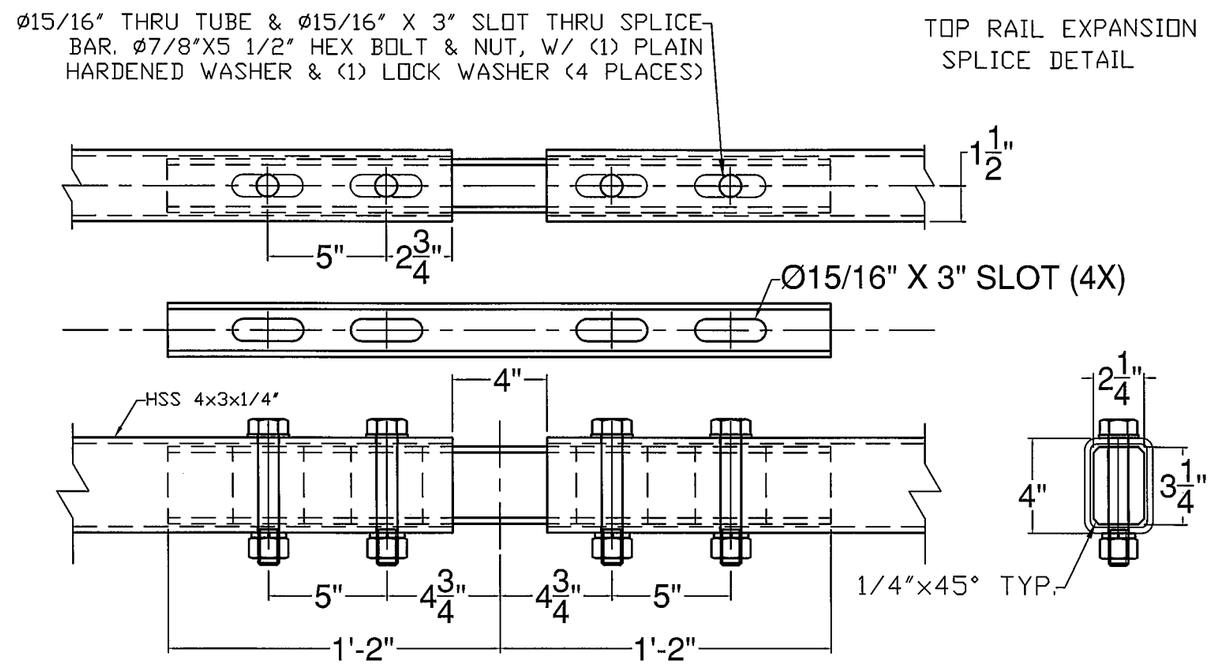

BOTTOM RAIL FIXED SPLICE DETAIL

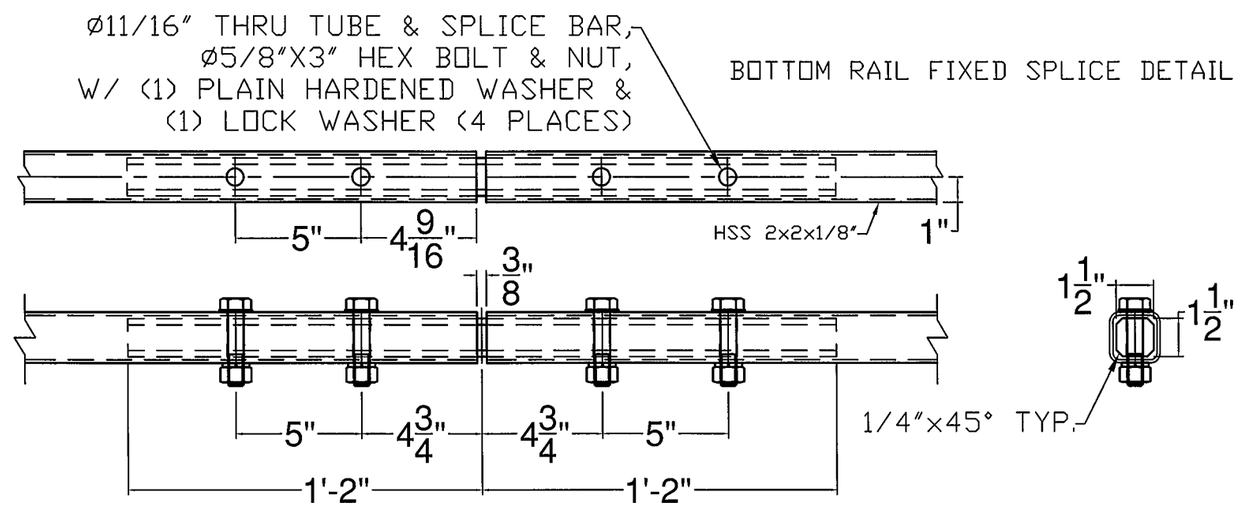

BOTTOM RAIL EXPANSION SPLICE DETAIL

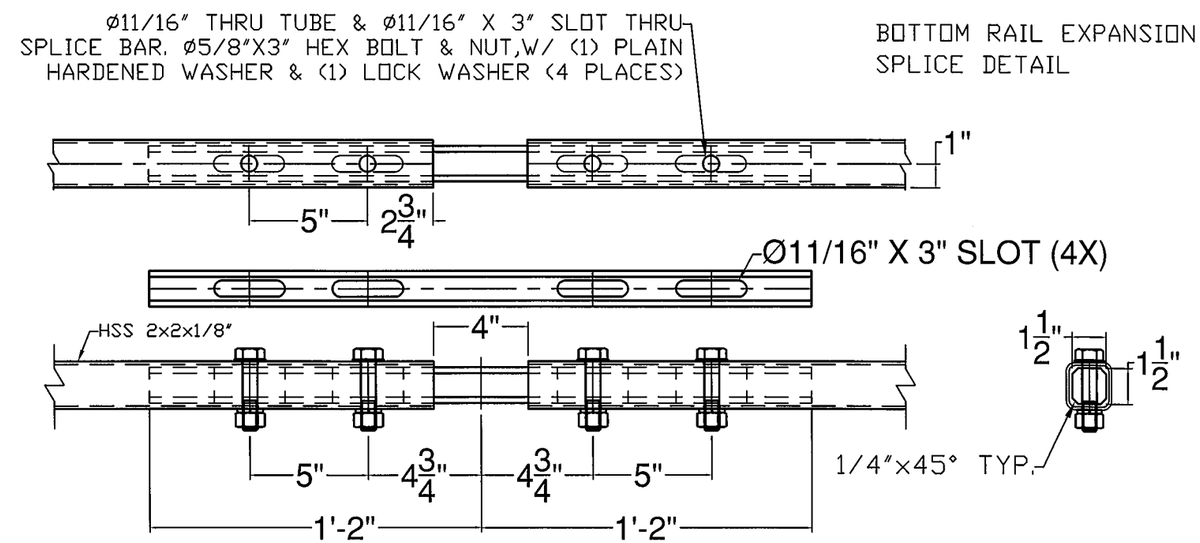

ITEM #: 900.640

FR Lafayette - MIDDLEBURY, (2014)

SHEET 2 OF 2

APPROVED BY:

BRIDGE RAIL DETAILS SHEET

EM13-252, MIDDLEBURY RS 0174 (8)

TOWN OF MIDDLEBURY, ADDISON COUNTY, VT RTE 125 (MAJOR COLLECTOR), BRIDGE NO : 13

REV	NO.	DATE	DESCRIPTION	BY	REV	NO.	DATE	DESCRIPTION	BY

ELDERLEE, INC.
OAKS CORNERS, NEW YORK 14518
E-Mail: dlong@elderlee.com / epeek@elderlee.com
Tel:315-789-6670 Fax:315-789-6615

CERTIFIED FABRICATOR

DRAWN	E.P.	3/7/14
CHECKED	D.L.	3/10/14
APPROVED	.	.
SCALE	SCHEMATIC	
DRAWING NO.	FR L - MIDDLEBURY	

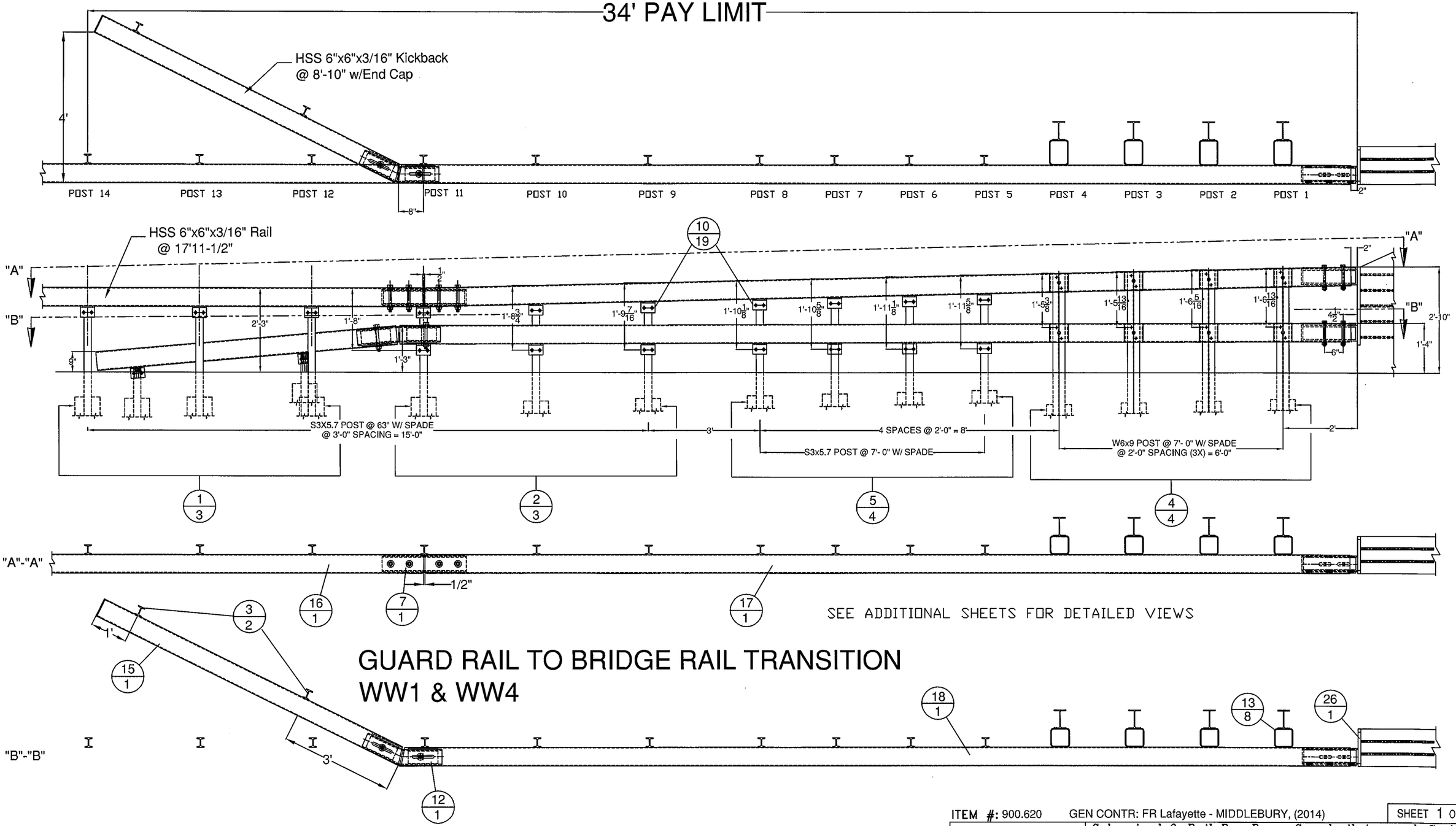

GUARD RAIL TO BRIDGE RAIL TRANSITION
WW1 & WW4

ITEM #: 900.620 GEN CONTR: FR Lafayette - MIDDLEBURY, (2014)

SHEET 1 OF 8

APPROVED BY:

Galvanized 2-Rail Box Beam Guardrail Approach Section

EM13-252, MIDDLEBURY RS 0174 (8)

TOWN OF MIDDLEBURY, ADDISON COUNTY, VT RTE 125 (MAJOR COLLECTOR), BRIDGE NO : 13

R	NO.	DATE	DESCRIPTION	BY	R	NO.	DATE	DESCRIPTION	BY
E	1	3/20/14	REVISED PER 3/18/14 MARK-UP	E.P.	E				
V	2	4/2/14	REVISED PER 3/25/14 MARK-UP	E.P.	V				

ELDERLEE, INC.
OAKS CORNERS, NEW YORK 14518
E-Mail: dlong@elderlee.com / epeek@elderlee.com
Tel: 315-789-6670 Fax: 315-789-6615

CERTIFIED FABRICATOR

DRAWN	E.P.	3/7/14
CHECKED	D.L.	3/10/14
APPROVED	M.V.	.
SCALE	SCHEMATIC	
DRAWING NO.	FR L - MIDDLEBURY 2014	

BILL OF MATERIALS, WW 1

ITEM #	QTY.	COMPONENT #	DESCRIPTION	MATERIAL (ASTM)
1	3	0013.57021	3" I-POST, PUNCH 8" W/SPD @ 63" LG	ASTM A572 Gr. 50
2	3	0013.57025	3" I-POST, PUNCH 8", & 20" W/SPD @ 63" LG	ASTM A572 Gr. 50
3	2	0013.57060	3" I-END POST W/SPD @ 3'-8" LG	ASTM A572 Gr. 50
4	4		W6X9 POST @ 7' W/SPD & 5/8" HOLES @ VARIOUS	ASTM A572 Gr. 50
5	4		3" I-POST, PUNCH 8" & VARIOUS", W/8X32" SPADE @7'	ASTM A572 Gr. 50
7	1	0033.00640	HSS 5X5 TUBE SPLICE @27" LG W/ 1/4" SHIMS	A500 Gr. B / A572 Gr 50
10	19	0054.00050	REG BB SHELF ANGLES @ 4-1/2"	ASTM A36
12	1		HSS 5X5 DBL BEND TUBE SPL @ 27" LG & 42°ANGLE	A500 Gr. B / A572 Gr 50
13	8	0054.00566	6X6" TRANS. TUBE B/O @ 6" LG	A500 Gr. B
15	1		6X6" BB @ 9'-0" KICKBACK, W/ CAP & 21° ANGLE	A500 Gr. B / A36
16	1		6X6" BB @ 17'-11 1/2", DRILL 3" CC, W/ 19'-6" RADIUS	A500 Gr. B
17	1		6X6" BB TOP TRANS @ 24'-9 3/4" LG W/EXP END, & 19'-6" RAD.	A500 Gr. B
18	1		6X6" BB BTM TRANS @ 25'-6 3/4" LG W/EXP END & 19'-6" RAD.	A500 Gr. B
19	18	0080.03355	3/8" X 7 1/2" BOLT, NUT, & 2 FW	A307, A563, F436
20	19	0080.04100	1/2" x 1-1/2" BOLT, NUT, & FW	A307, A563, F436
21	16	0080.04120	1/2" x 1-1/2" BOLT, NUT, 2 FW & LW	A307, A563, F436
23	14	0080.06340	3/4" X 7-1/2" BOLT, NUT, 2 FW	A325, A563, F436
24	8	0080.06370	3/4" X 8" CARR BOLT, NUT, FW & LW	A307, A563, F436
26	1		PARAPET WALL CONNECTIONS, LEFT-TRAILING	A572 Gr. 50, A615 Gr. 60, A709

HARDWARE NOTES

ITEM #	FUNCTION
19	BOLT RAIL TO SHELF ANGLE (ITEM #10)
20	BOLT SHELF ANGLE (ITEM # 10) TO POST
21	BOLT BLOCK-OUTS (ITEM # 13) TO HEAVY POST (ITEM # 4)
23	SPLICE TUBING (ITEM #'S 7 & 12), & (4) PER PARAPET WALL CONNECTION (ITEM # 26)
24	BOLT RAIL (ITEMS #'S 17, & 18 TO BLOCK-OUTS (ITEM # 13)

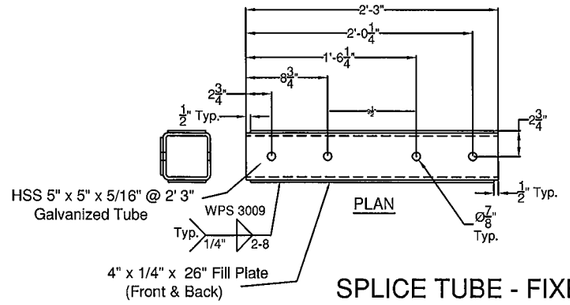

SPLICE TUBE - FIXED

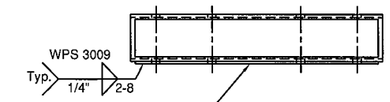

ELEVATION
FIXED SPLICE TUBE

(ITEM # 7)

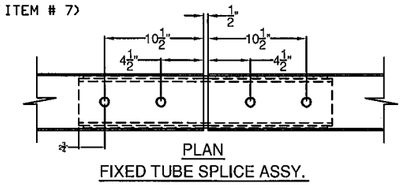

PLAN
FIXED TUBE SPLICE ASSY.

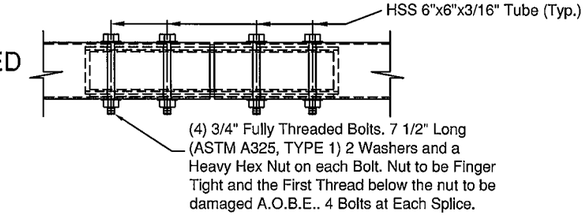

ELEVATION
FIXED TUBE SPLICE ASSY.

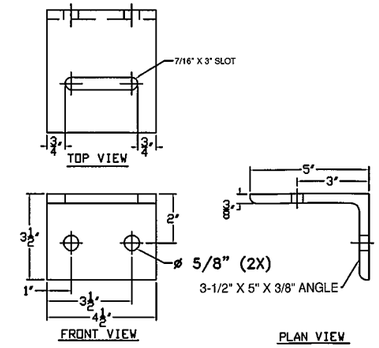

(ITEM # 10)

PLAN VIEW

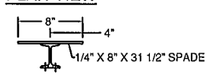

HOLE POSITION CHART	
POST	LENGTH
5	1'-11 5/8"
6	1'-11 1/8"
7	1'-10 5/8"
8	1'-10 1/8"
9	1'-9 7/16"
10	1'-8 3/4"
11	1'-8"

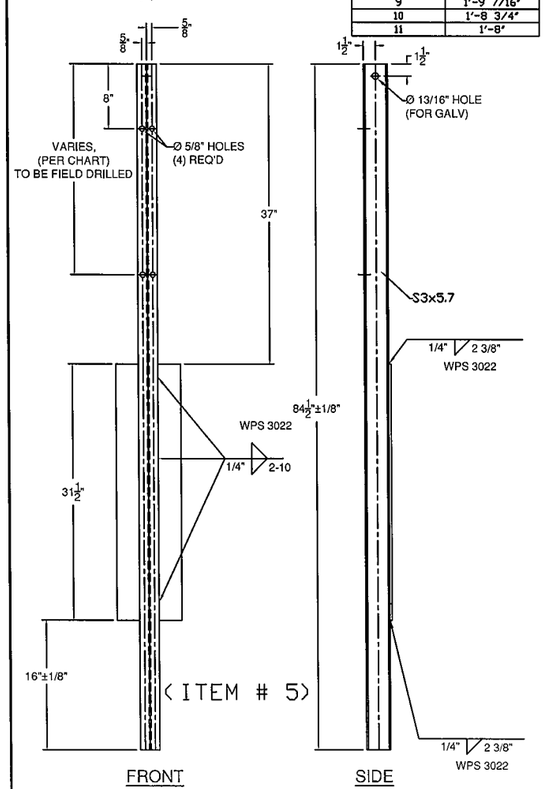

(ITEM # 5)

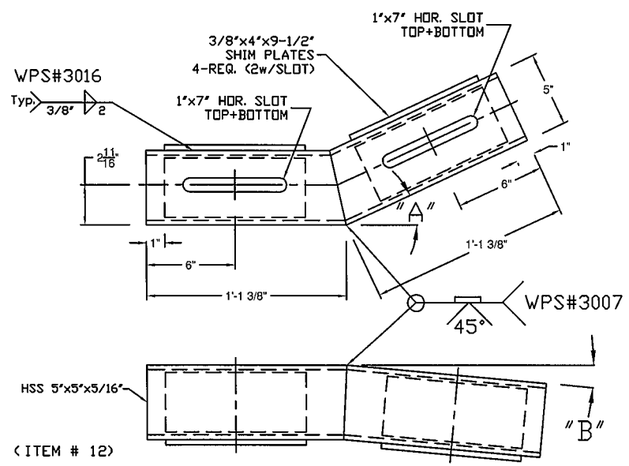

(ITEM # 12)

"A" - SEE PLAN FOR TURN BACK DISTANCE, SET ANGLE ACCORDINGLY.(WW1-42°, WW2-28°, WW3-25°, WW4-25°)
"B" - TURN DOWN ANGLE SET BY THE 9" MEASURMENT AT THE END OF THE BOX BEAM.

BACK VIEW

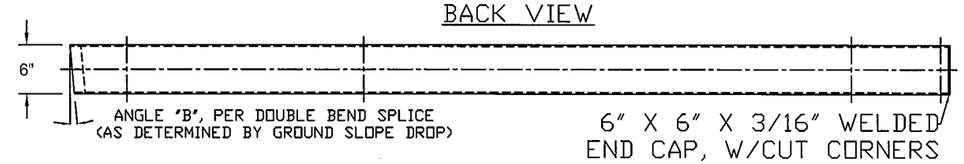

6" X 6" X 3/16" WELDED
END CAP, W/CUT CORNERS

TOP VIEW

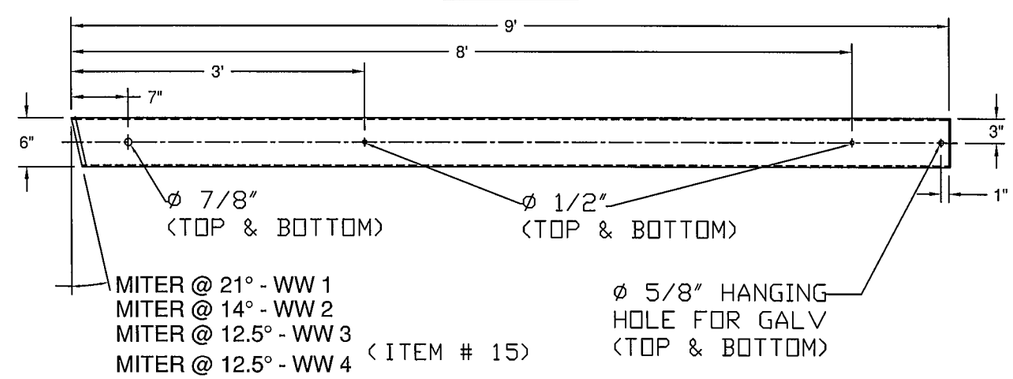

(ITEM # 15)

GENERAL NOTES:

1) ALL RAILING IS TO BE FABRICATED AND ERECTED ACCORDING TO SECTION 525 OF THE STANDARD SPECIFICATIONS.
2) BOLTS SHALL BE TORQUED SNUG TIGHT (APPROXIMATELY 100 FT-LB).
3) PROTRUSIONS CAUSED BY WELDING OR GALVANIZING ARE NOT PERMITTED ON THE ADJOINING SURFACES OF THE BOX BEAM RAILS, SPLICE TUBES AND FILL PLATES.
4) BOX BEAM TUBE AND STEEL POST MATERIALS, DIMENSION SIZES AND NOTES SHALL BE THE SAME AS THOSE OF THE BRIDGE RAIL, UNLESS OTHERWISE NOTED.
5) ANY BENDING OF RAIL SHALL BE DONE AT THE FABRICATION PLANT. RADII GREATER THAN 16' TO BE CURVED ON A TUBE BENDING MACHINE, RADII LESS THAN 16' TO BE "PIE CUT" AND WELDED. CURVED RAILING WILL HAVE AN 18" LENGTH ON EACH END STRAIGHT TO ACCOMADATE SPLICES.

ITEM #: 900.620 GEN CONTR: FR Lafayette - MIDDLEBURY, (2014) SHEET 2 OF 8

APPROVED BY:

Galvanized 2-Rail Box Beam Guardrail Approach Section

EM13-252, MIDDLEBURY RS 0174 (8)
TOWN OF MIDDLEBURY, ADDISON COUNTY, VT RTE 125 (MAJOR COLLECTOR), BRIDGE NO : 13

R	NO.	DATE	DESCRIPTION	BY	R	NO.	DATE	DESCRIPTION	BY
E	1	3/20/14	REVISED PER 3/18/14 MARK-UP	E.P.	E				
V	2	4/2/14	REVISED PER 3/25/14 MARK-UP	E.P.	V				

ELDERLEE, INC.
OAKS CORNERS, NEW YORK 14518
E-Mail: dlong@elderlee.com / epeek@elderlee.com
Tel:315-789-6670 Fax:315-789-6615

CERTIFIED FABRICATOR

DRAWN	E.P.	3/7/14
CHECKED	D.L.	3/10/14
APPROVED	M.V.	.
SCALE	SCHEMATIC	
DRAWING NO.	FR L - MIDDLEBURY 2014	

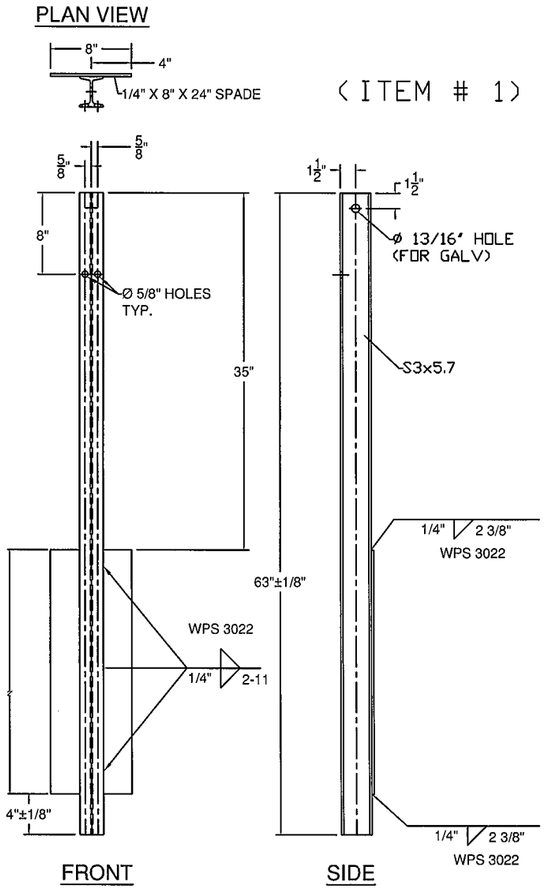

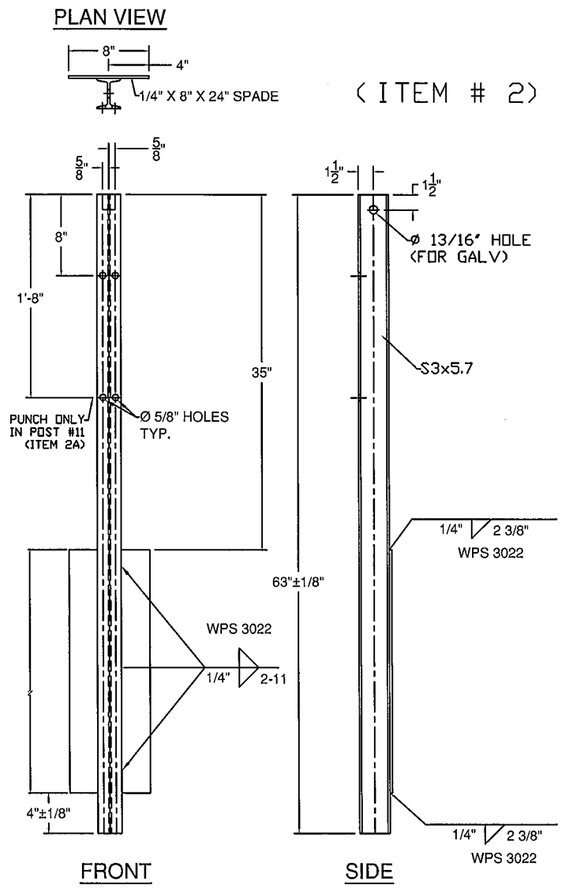

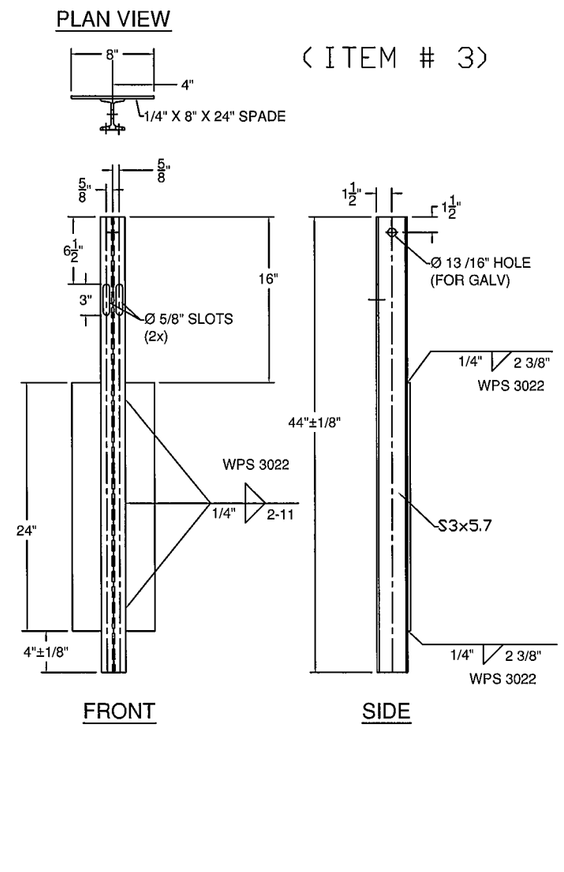

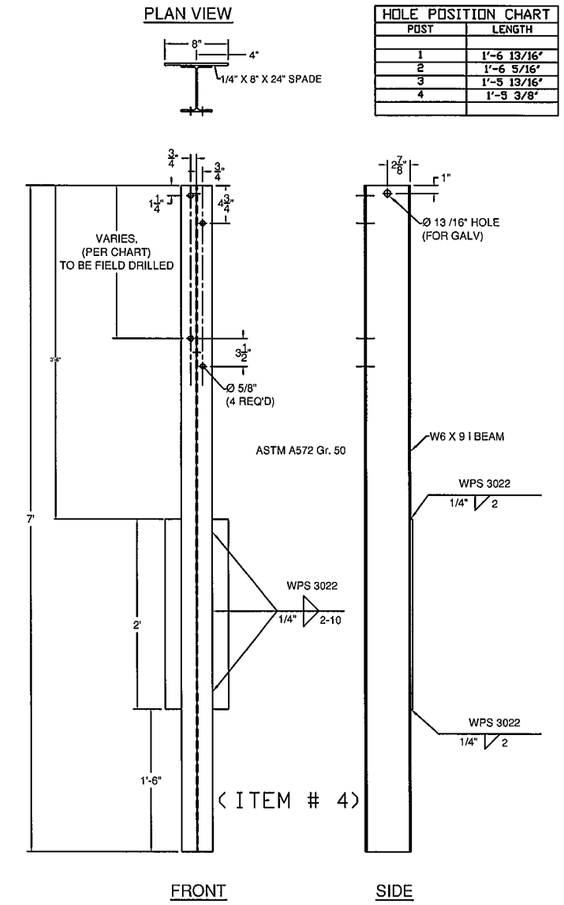

HOLE POSITION CHART	
POST	LENGTH
1	1'-6 13/16"
2	1'-6 5/16"
3	1'-5 13/16"
4	1'-5 3/8"

BILL OF MATERIALS			
ITEM #	QTY	DESCRIPTION	ASTM #
1	1	DBL TUBE WALL PLATE - 1" X 12" x 25"	ASTM A572 Gr. 50
2	10	RAW, Ø5/8" REBAR @ 24"	A615, Gr. 60
3	2	5" X 5" X 5/16" TUBE W/ SLOTS @ 18"	ASTM A500 Gr. B
4	2	SHIM PL 1/2" X 4" X 17" W/ SLOTS	ASTM A36(ASTM A709 Gr. 36)CVN
5	2	SHIM PL 1/2" X 4" X 17" (W/O SLOTS)	ASTM A36(ASTM A709 Gr. 36)CVN

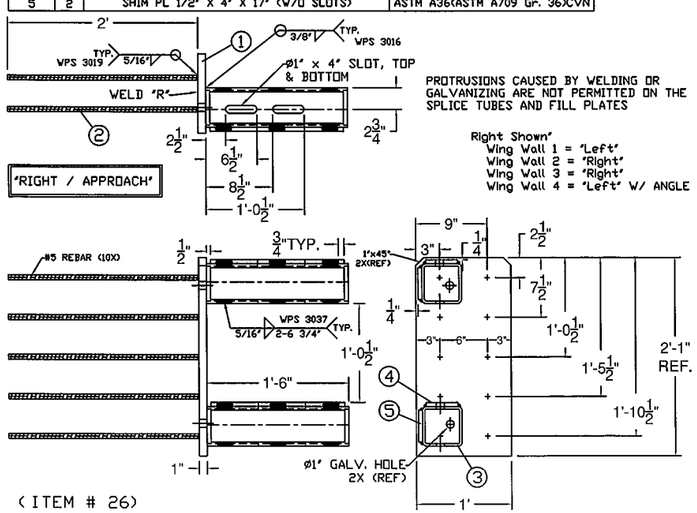

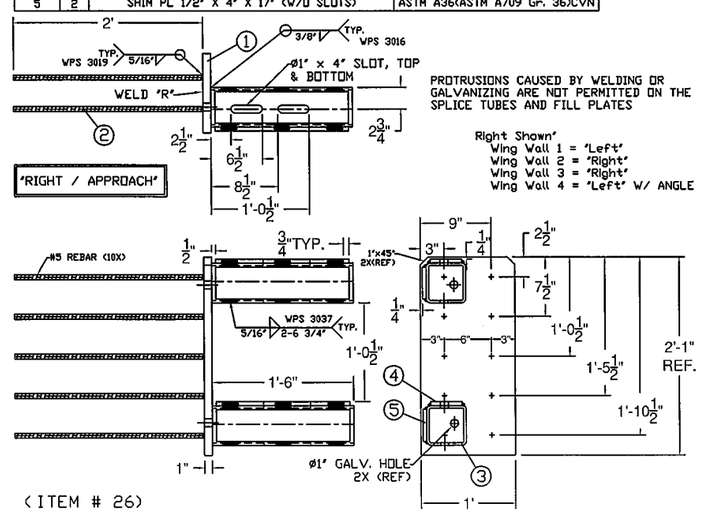

BILL OF MATERIALS			
ITEM #	QTY	DESCRIPTION	ASTM #
1	1	DBL TUBE WALL PLATE - 1" X 12" x 25"	ASTM A572 Gr. 50
2	10	RAW, Ø5/8" REBAR @ 24"	A615, Gr. 60
3	2	5" X 5" X 5/16" TUBE W/ SLOTS @ 18"	ASTM A500 Gr. B
4	2	SHIM PL 1/2" X 4" X 17" W/ SLOTS	ASTM A36(ASTM A709 Gr. 36)CVN
5	2	SHIM PL 1/2" X 4" X 17" (W/O SLOTS)	ASTM A36(ASTM A709 Gr. 36)CVN

ITEM #: 900.620 GEN CONTR: FR Lafayette - MIDDLEBURY, (2014)

SHEET 3 OF 8

APPROVED BY:

Galvanized 2-Rail Box Beam Guardrail Approach Section

EM13-252, MIDDLEBURY RS 0174 (8)

TOWN OF MIDDLEBURY, ADDISON COUNTY, VT RTE 125 (MAJOR COLLECTOR), BRIDGE NO : 13

R	NO.	DATE	DESCRIPTION	BY	R	NO.	DATE	DESCRIPTION	BY
E	1	3/20/14	REVISED PER 3/18/14 MARK-UP	E.P.	E				
V	2	4/2/14	REVISED PER 3/25/14 MARK-UP	E.P.	V				

ELDERLEE, INC.
OAKS CORNERS, NEW YORK 14518
E-Mail: dlong@elderlee.com / epeek@elderlee.com
Tel: 315-789-6670 Fax: 315-789-6615

CERTIFIED FABRICATOR

DRAWN	E.P.	3/7/14
CHECKED	D.L.	3/10/14
APPROVED	M.V.	-
SCALE	SCHEMATIC	
DRAWING NO.	FR L - MIDDLEBURY 2014	

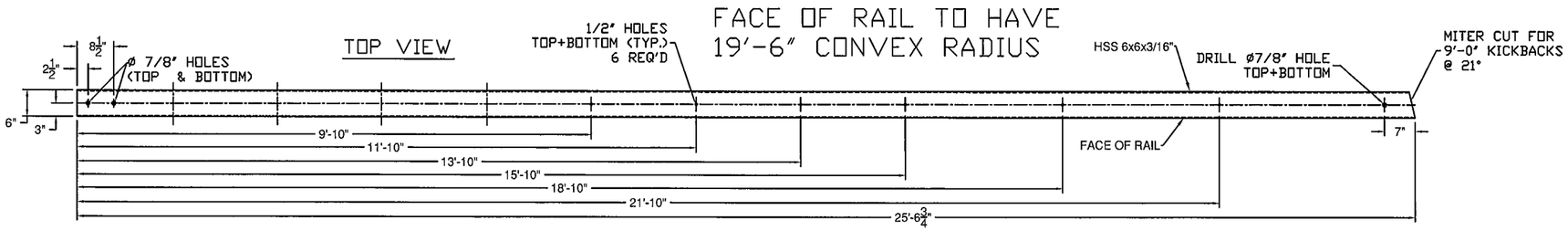

WW1

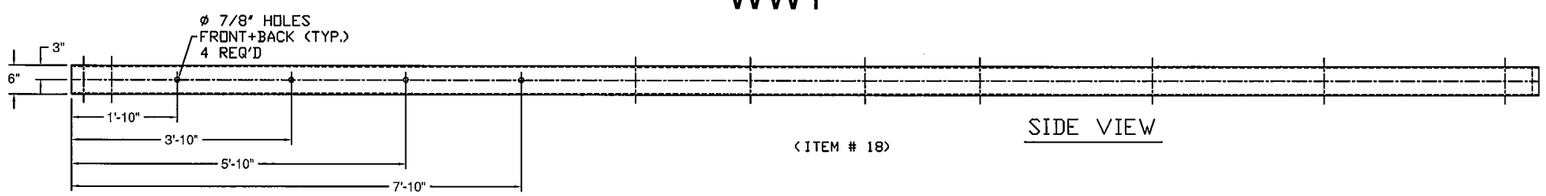

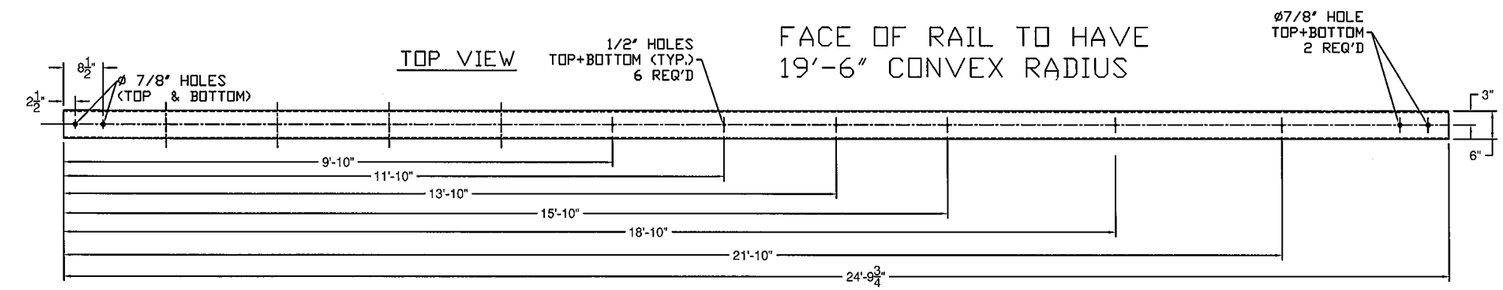

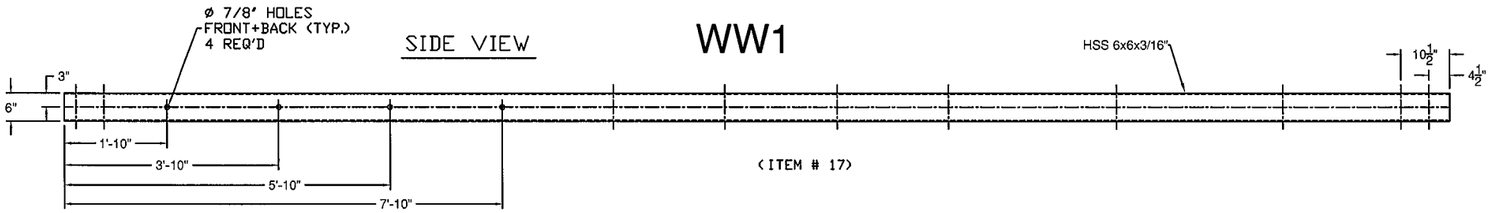

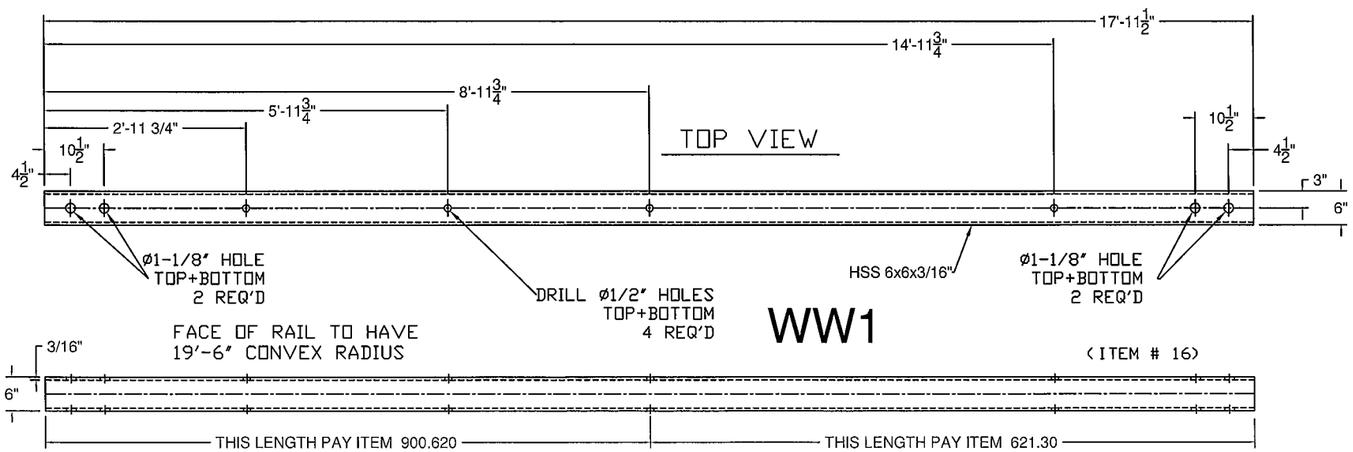

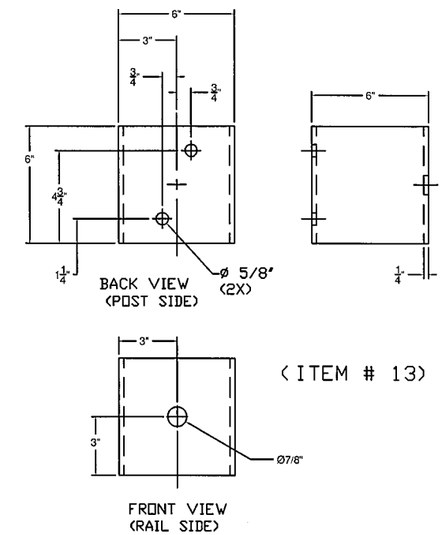

ITEM #: 900.620 GEN CONTR: FR Lafayette - MIDDLEBURY, (2014)

SHEET 4 OF 8

APPROVED BY:

Galvanized 2-Rail Box Beam Guardrail Approach Section

EM13-252, MIDDLEBURY RS 0174 (8)

TOWN OF MIDDLEBURY, ADDISON COUNTY, VT RTE 125 (MAJOR COLLECTOR), BRIDGE NO : 13

R	NO.	DATE	DESCRIPTION	BY	R	NO.	DATE	DESCRIPTION	BY
E	1	3/20/14	REVISED PER 3/18/14 MARK-UP	E.P.	E				
V	2	4/2/14	REVISED PER 3/25/14 MARK-UP	E.P.	V				

ELDERLEE, INC.
OAKS CORNERS, NEW YORK 14518
E-Mail: dlong@elderlee.com / epeek@elderlee.com
Tel: 315-789-6670 Fax: 315-789-6615

CERTIFIED FABRICATOR

DRAWN	E.P.	3/7/14
CHECKED	D.L.	3/10/14
APPROVED	M.V.	.
SCALE	SCHEMATIC	
DRAWING NO.	FR L - MIDDLEBURY 2014	

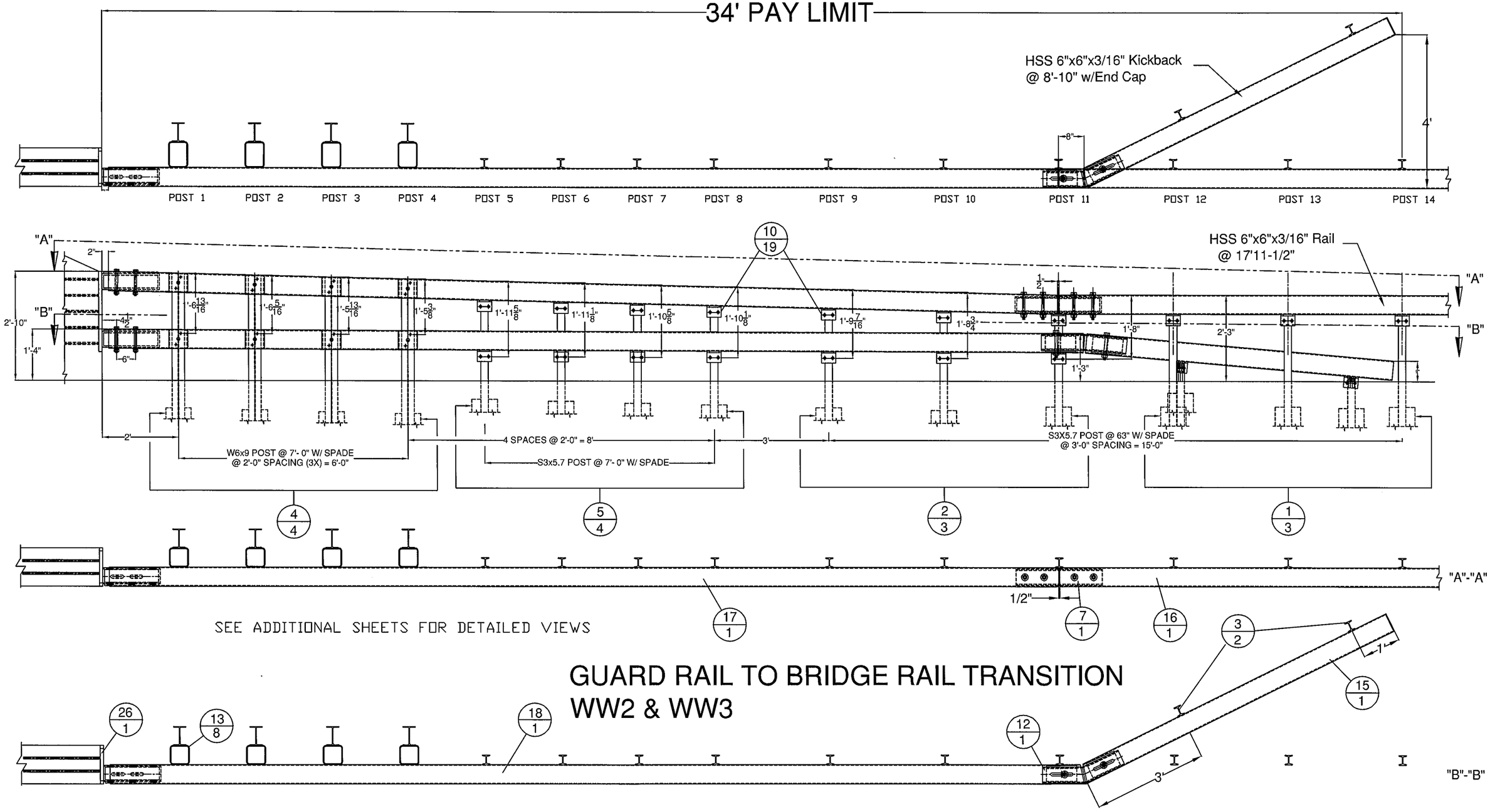

GUARD RAIL TO BRIDGE RAIL TRANSITION
WW2 & WW3

ITEM #: 900.620 GEN CONTR: FR Lafayette - MIDDLEBURY, (2014)

SHEET 5 OF 8

APPROVED BY:

Galvanized 2-Rail Box Beam Guardrail Approach Section

EM13-252, MIDDLEBURY RS 0174 (8)

TOWN OF MIDDLEBURY, ADDISON COUNTY, VT RTE 125 (MAJOR COLLECTOR), BRIDGE NO : 13

R	NO.	DATE	DESCRIPTION	BY	R	NO.	DATE	DESCRIPTION	BY
E	1	3/20/14	REVISED PER 3/18/14 MARK-UP	E.P.	E				
V	2	4/2/14	REVISED PER 3/25/14 MARK-UP	E.P.	V				

ELDERLEE, INC.
OAKS CORNERS, NEW YORK 14518
E-Mail: dlong@elderlee.com / epeek@elderlee.com
Tel: 315-789-6620 Fax: 315-789-6615

CERTIFIED FABRICATOR

DRAWN	E.P.	3/7/14
CHECKED	D.L.	3/10/14
APPROVED	M.V.	.
SCALE	SCHEMATIC	
DRAWING NO.	FR L - MIDDLEBURY 2014	

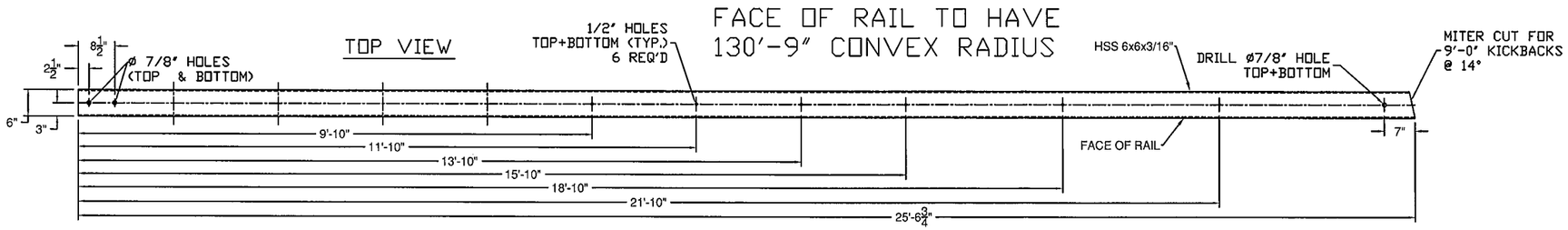

WW2

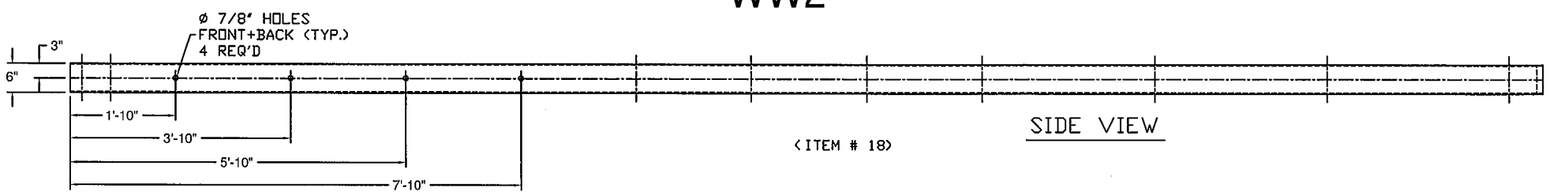

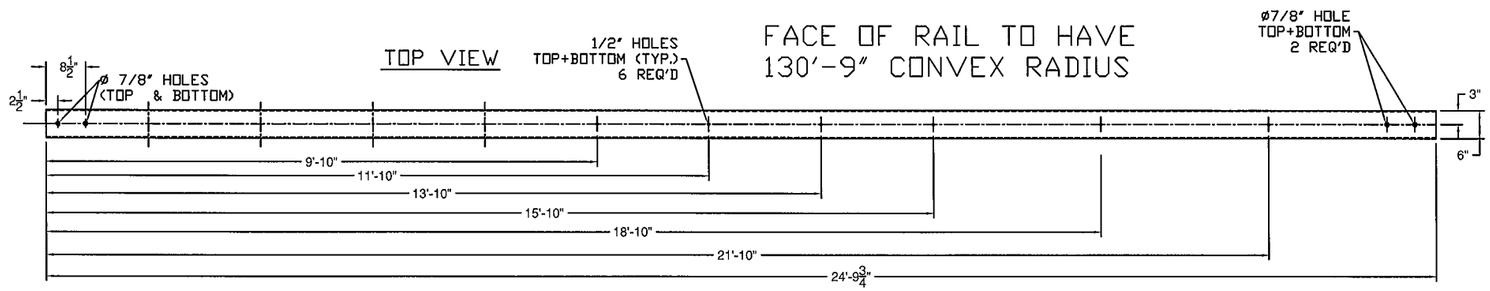

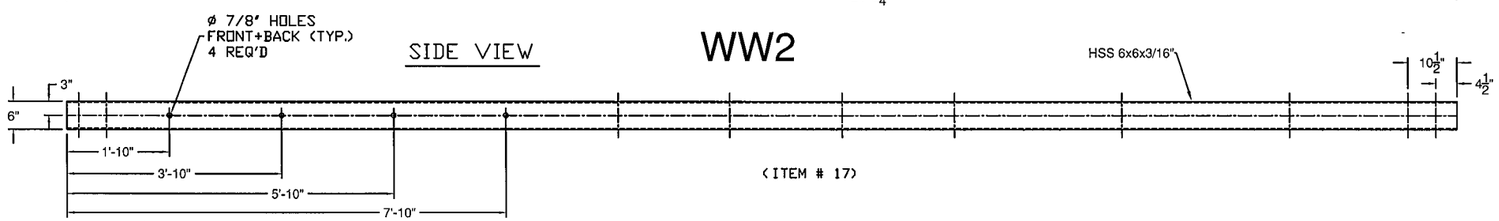

WW2

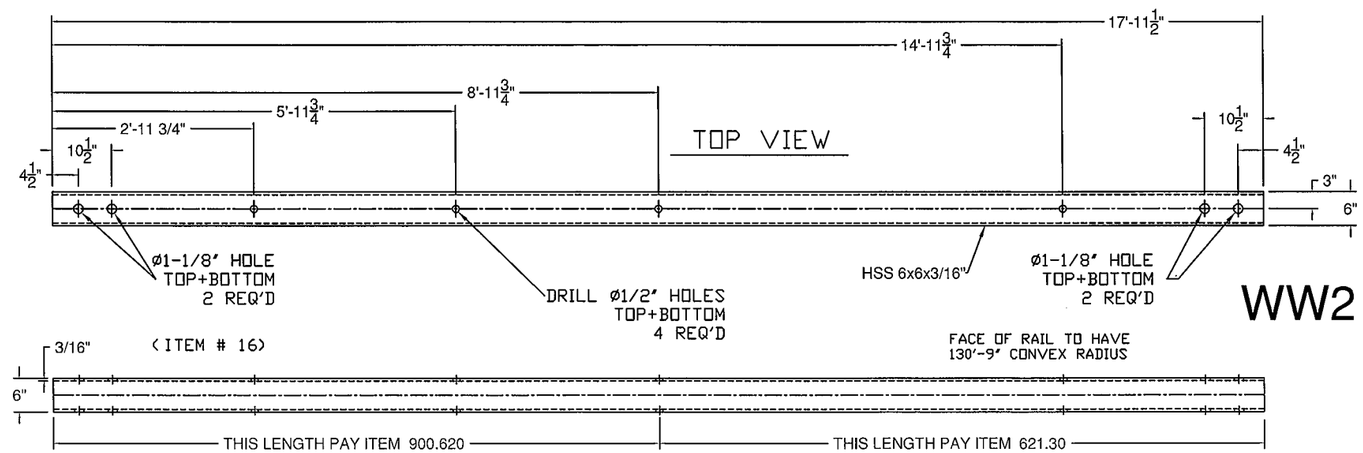

WW2

BILL OF MATERIALS, WW 2

ITEM #	QTY.	COMPONENT #	DESCRIPTION	MATERIAL (ASTM)
1	3	0013.57021	3' I-POST, PUNCH 8' W/SPD @ 63' LG	ASTM A572 Gr. 50
2	3	0013.57025	3' I-POST, PUNCH 8', & 20' W/SPD @ 63' LG	ASTM A572 Gr. 50
3	2	0013.57060	3' I-END POST W/SPD @ 3'-8' LG	ASTM A572 Gr. 50
4	4	0013.09001	W6X9 POST @ 7' W/SPD & 5/8' HOLES	ASTM A572 Gr. 50
5	4	0013.57010	3' I-POST, PUNCH 8' & 20', W/8X32' SPADE @7'	ASTM A572 Gr. 50
7	1	0033.00640	HSS 5X5 TUBE SPLICE @27' LG W/ 1/4' SHIMS	A500 Gr. B / A572 Gr 50
10	19	0054.00050	REG BB SHELF ANGLES @ 4-1/2'	ASTM A36
12	1		HSS 5X5 DBL BEND TUBE SPL @ 27' LG & 28°ANGLE	A500 Gr. B / A572 Gr 50
13	8	0054.00566	6X6' TRANS. TUBE B/O @ 6' LG	A500 Gr. B
15	1		6X6' BB @ 9'-0' KICKBACK, W/ CAP & 14° ANGLE	A500 Gr. B / A36
16	1		6X6' BB @ 17'-11 1/2', DRILL 3' CC, W/ 130'-9' RADIUS	A500 Gr. B
17	1		6X6' BB TOP TRANS @ 24'-9 3/4' LG W/EXP END, & 130'-9' RAD.	A500 Gr. B
18	1		6X6' BB BTM TRANS @ 25'-6 3/4' LG W/EXP END & 130'-9' RAD.	A500 Gr. B
19	18	0080.03355	3/8' X 7 1/2' BOLT, NUT, & 2 FW	A307, A563, F436
20	19	0080.04100	1/2' x 1-1/2' BOLT, NUT, & FW	A307, A563, F436
21	16	0080.04120	1/2' x 1-1/2' BOLT, NUT, 2 FW & LW	A307, A563, F436
23	14	0080.06340	3/4' X 7-1/2' BOLT, NUT, 2 FW	A325, A563, F436
24	8	0080.06370	3/4' X 8' CARR BOLT, NUT, FW & LW	A307, A563, F436
26	1		PARAPET WALL CONNECTIONS	A572 Gr. 50, A615 Gr. 60, A709

HARDWARE NOTES

ITEM #	FUNCTION
19	BOLT RAIL TO SHELF ANGLE (ITEM #10)
20	BOLT SHELF ANGLE (ITEM # 10) TO POST
21	BOLT BLOCK-OUTS (ITEM # 13) TO HEAVY POST (ITEM # 4)
23	SPLICE TUBING (ITEM #'S 7 & 12), & (4) PER PARAPET WALL CONNECTION (ITEM # 26)
24	BOLT RAIL (ITEMS #'S 17, & 18 TO BLOCK-OUTS (ITEM # 13)

ITEM #: 900.620 GEN CONTR: FR Lafayette - MIDDLEBURY, (2014)

SHEET 6 OF 8

APPROVED BY:

Galvanized 2-Rail Box Beam Guardrail Approach Section

EM13-252, MIDDLEBURY RS 0174 (8)

TOWN OF MIDDLEBURY, ADDISON COUNTY, VT RTE 125 (MAJOR COLLECTOR), BRIDGE NO : 13

R	NO.	DATE	DESCRIPTION	BY	R	NO.	DATE	DESCRIPTION	BY
E	1	3/20/14	REVISED PER 3/18/14 MARK-UP	E.P.	E				
V	2	4/2/14	REVISED PER 3/25/14 MARK-UP	E.P.	V				

ELDERLEE, INC.
OAKS CORNERS, NEW YORK 14518
E-Mail: dlong@elderlee.com / epeek@elderlee.com
Tel: 315-789-6670 Fax: 315-789-6615

CERTIFIED FABRICATOR

DRAWN	E.P.	3/7/14
CHECKED	D.L.	3/10/14
APPROVED	M.V.	-
SCALE	SCHEMATIC	
DRAWING NO.	FR L - MIDDLEBURY 2014	

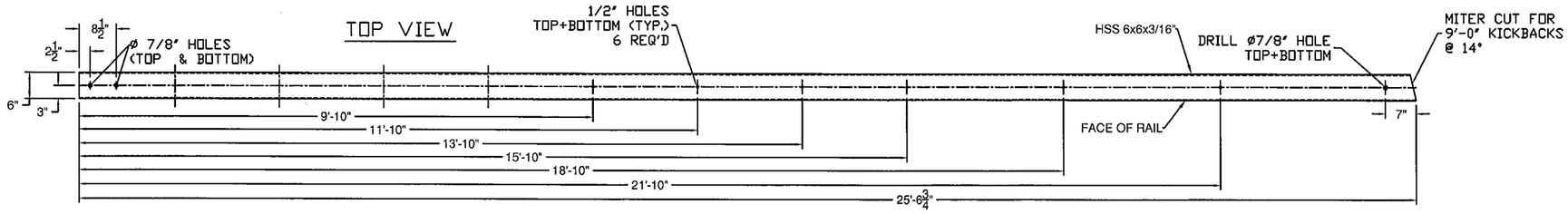

WW3

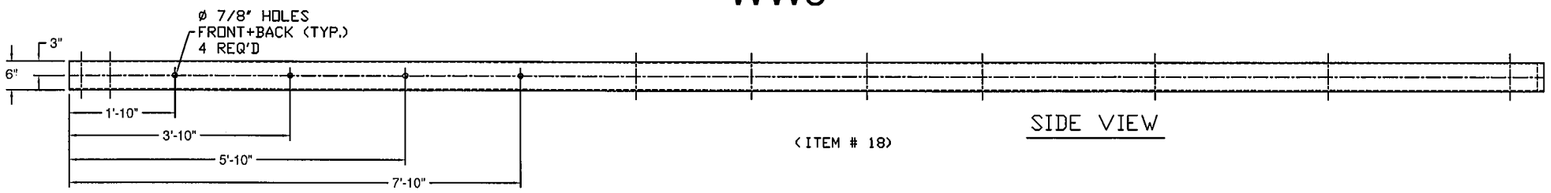

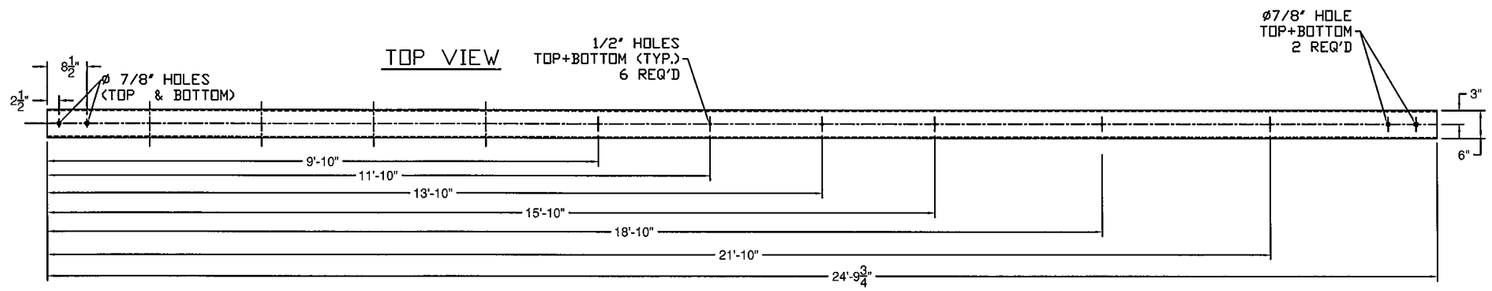

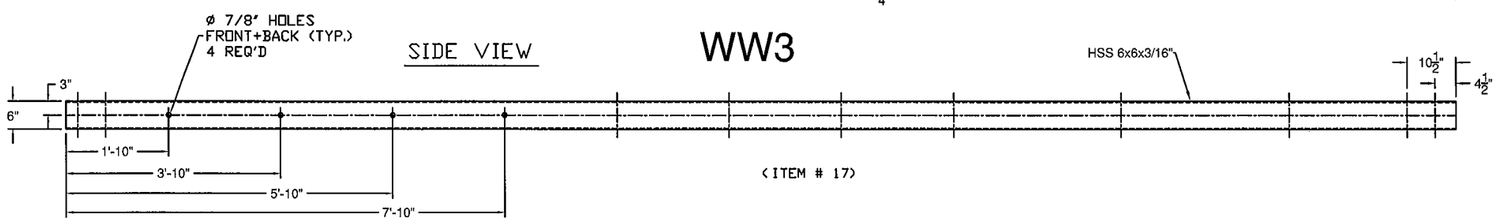

WW3

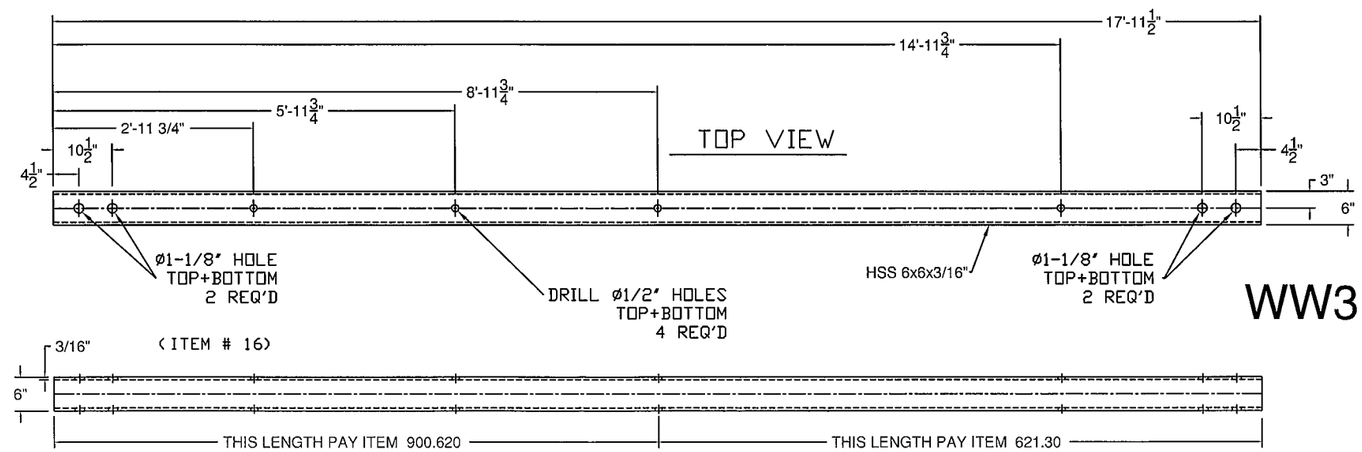

WW3

BILL OF MATERIALS, WW 3

ITEM #	QTY.	COMPONENT #	DESCRIPTION	MATERIAL (ASTM)
1	3	0013.57021	3" I-POST, PUNCH 8" W/SPD @ 63" LG	ASTM A572 Gr. 50
2	3	0013.57025	3" I-POST, PUNCH 8", & 20" W/SPD @ 63" LG	ASTM A572 Gr. 50
3	2	0013.57060	3" I-END POST W/SPD @ 3'-8" LG	ASTM A572 Gr. 50
4	4	0013.09001	W6X9 POST @ 7' W/SPD & 5/8" HOLES	ASTM A572 Gr. 50
5	4	0013.57010	3" I-POST, PUNCH 8" & 20", W/8X32" SPADE @7'	ASTM A572 Gr. 50
7	1	0033.00640	HSS 5X5 TUBE SPLICE @27" LG W/ 1/4" SHIMS	A500 Gr. B / A572 Gr 50
10	19	0054.00050	REG BB SHELF ANGLES @ 4-1/2"	ASTM A36
12	1		HSS 5X5 DBL BEND TUBE SPL @ 27" LG & 25°ANGLE	A500 Gr. B / A572 Gr 50
13	8	0054.00566	6X6" TRANS. TUBE B/O @ 6" LG	A500 Gr. B
15	1		6X6" BB @ 9'-0" KICKBACK, W/ CAP & 12 1/2° ANGLE	A500 Gr. B / A36
16	1		6X6" BB @ 17'-11 1/2", DRILL 3" CC	A500 Gr. B
17	1		6X6" BB TOP TRANS @ 24'-9 3/4" LG W/EXP END	A500 Gr. B
18	1		6X6" BB BTM TRANS @ 25'-6 3/4" LG W/EXP END	A500 Gr. B
19	18	0080.03355	3/8" X 7 1/2" BOLT, NUT, & 2 FW	A307, A563, F436
20	19	0080.04100	1/2" x 1-1/2" BOLT, NUT, & FW	A307, A563, F436
21	16	0080.04120	1/2" x 1-1/2" BOLT, NUT, 2 FW & LW	A307, A563, F436
23	14	0080.06340	3/4" X 7-1/2" BOLT, NUT, 2 FW	A325, A563, F436
24	8	0080.06370	3/4" X 8" CARR BOLT, NUT, FW & LW	A307, A563, F436
26	1		PARAPET WALL CONNECTIONS	A572 Gr. 50, A615 Gr. 60, A709

HARDWARE NOTES

ITEM #	FUNCTION
19	BOLT RAIL TO SHELF ANGLE (ITEM #10)
20	BOLT SHELF ANGLE (ITEM # 10) TO POST
21	BOLT BLOCK-OUTS (ITEM # 13) TO HEAVY POST (ITEM # 4)
23	SPLICE TUBING (ITEM #'S 7 & 12), & (4) PER PARAPET WALL CONNECTION (ITEM # 26)
24	BOLT RAIL (ITEMS #'S 17, & 18 TO BLOCK-OUTS (ITEM # 13)

ITEM #: 900.620 GEN CONTR: FR Lafayette - MIDDLEBURY, (2014)

SHEET 7 OF 8

APPROVED BY:

Galvanized 2-Rail Box Beam Guardrail Approach Section

EM13-252, MIDDLEBURY RS 0174 (8)

TOWN OF MIDDLEBURY, ADDISON COUNTY, VT RTE 125 (MAJOR COLLECTOR), BRIDGE NO : 13

R	NO.	DATE	DESCRIPTION	BY	R	NO.	DATE	DESCRIPTION	BY
E	1	3/20/14	REVISED PER 3/18/14 MARK-UP	E.P.	E				
V	2	4/2/14	REVISED PER 3/25/14 MARK-UP	E.P.	V				

ELDERLEE, INC.
OAKS CORNERS, NEW YORK 14518
E-Mail: dlong@elderlee.com / epeek@elderlee.com
Tel: 315-789-6670 Fax: 315-789-6615

AISC CERTIFIED FABRICATOR

DRAWN	E.P.	3/7/14
CHECKED	D.L.	3/10/14
APPROVED	M.V.	.
SCALE	SCHEMATIC	
DRAWING NO.	FR L - MIDDLEBURY 2014	

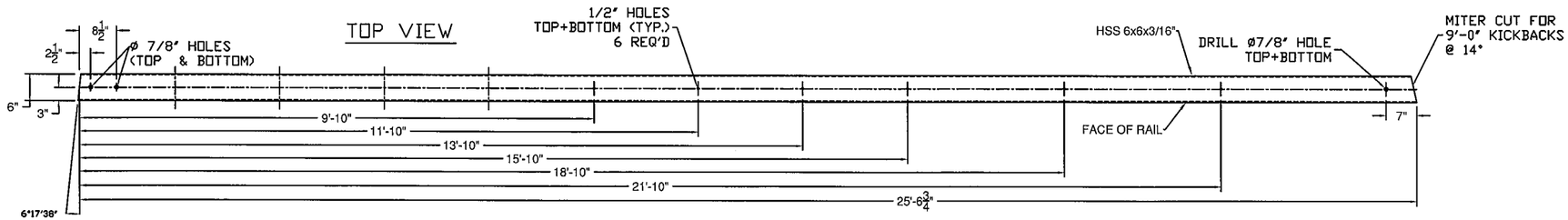

WW4

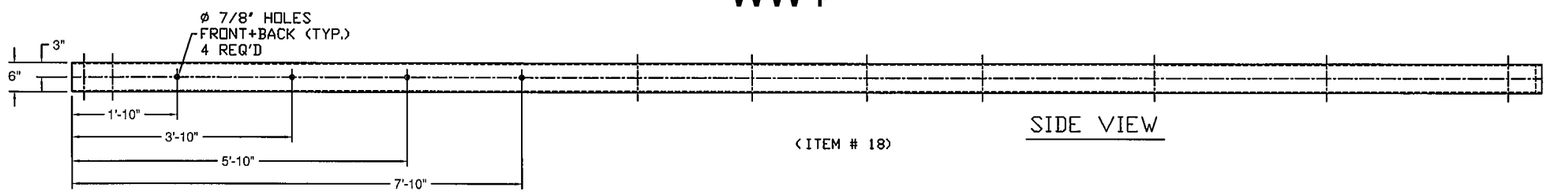

(ITEM # 18)

SIDE VIEW

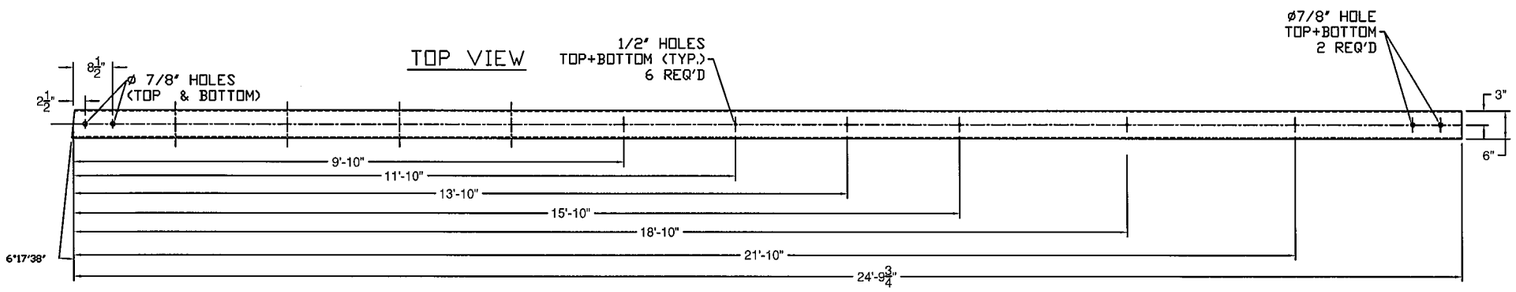

WW4

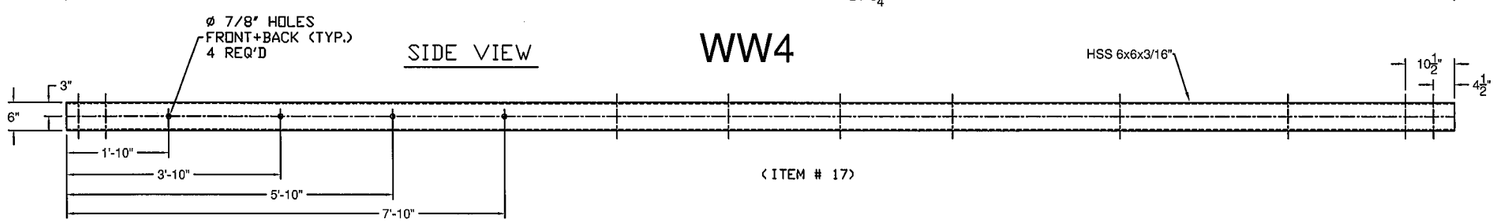

WW4

(ITEM # 17)

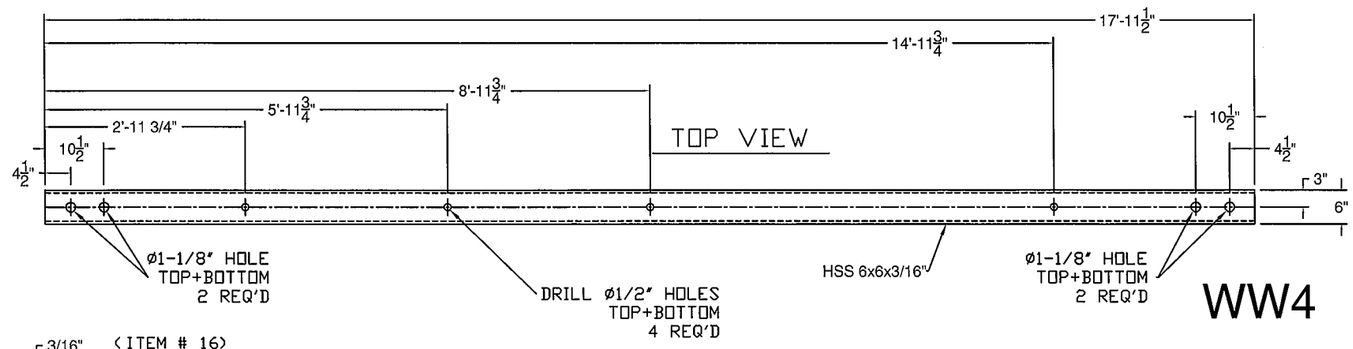

WW4

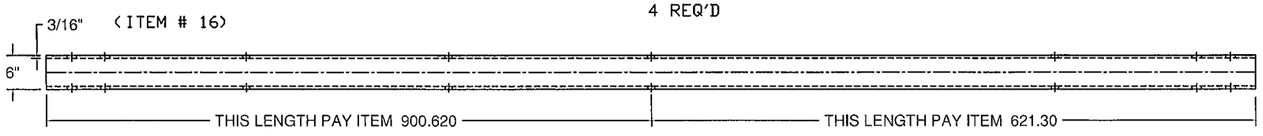

(ITEM # 16)

BILL OF MATERIALS			
ITEM #	QTY	DESCRIPTION	ASTM #
1	1	DBL TUBE WALL PLATE - 1' X 12" x 25'	ASTM A572 Gr. 50
2	10	RAW, ø5/8" REBAR @ 24'	A615, Gr. 60
3	2	5' X 5' X 5/16' TUBE W/ SLOTS @ 18'	ASTM A500 Gr. B
4	2	SHIM PL 1/2" X 4' X 17' W/ SLOTS	ASTM A36(ASTM A709 Gr. 36)CVN
5	2	SHIM PL 1/2" X 4' X 17' (W/O SLOTS)	ASTM A36(ASTM A709 Gr. 36)CVN

PROTRUSIONS CAUSED BY WELDING OR GALVANIZING ARE NOT PERMITTED ON THE SPLICE TUBES AND FILL PLATES

WW4

Right Shown'
Wing Wall 1 = 'Left'
Wing Wall 2 = 'Right'
Wing Wall 3 = 'Right'
Wing Wall 4 = 'Left' W/ 6° 8' ANGLE

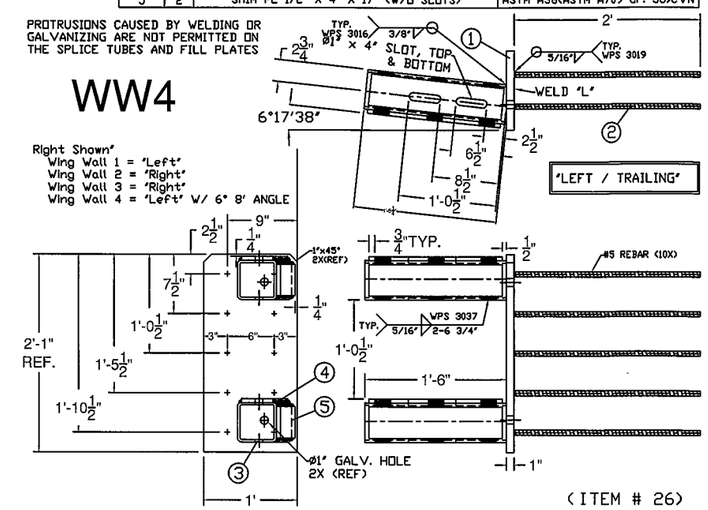

(ITEM # 26)

BILL OF MATERIALS, WW 4				
ITEM #	QTY.	COMPONENT #	DESCRIPTION	MATERIAL (ASTM)
1	3	0013.57021	3" I-POST, PUNCH 8' W/SPD @ 63' LG	ASTM A572 Gr. 50
2	3	0013.57025	3" I-POST, PUNCH 8', & 20' W/SPD @ 63' LG	ASTM A572 Gr. 50
3	2	0013.57060	3" I-END POST W/SPD @ 3'-8' LG	ASTM A572 Gr. 50
4	4	0013.09001	W6X9 POST @ 7' W/SPD & 5/8" HOLES	ASTM A572 Gr. 50
5	4	0013.57010	3" I-POST, PUNCH 8' & 20', W/8X32" SPADE @7'	ASTM A572 Gr. 50
7	1	0033.00640	HSS 5X5 TUBE SPLICE @27' LG W/ 1/4' SHIMS	A500 Gr. B / A572 Gr 50
10	19	0054.00050	REG BB SHELF ANGLES @ 4-1/2'	ASTM A36
12	1		HSS 5X5 DBL BEND TUBE SPL @ 27' LG & 25°ANGLE	A500 Gr. B / A572 Gr 50
13	8	0054.00566	6X6' TRANS. TUBE B/O @ 6' LG	A500 Gr. B
15	1		6X6' BB @ 9'-0" KICKBACK, W/ CAP & 12 1/2° ANGLE	A500 Gr. B / A36
16	1		6X6' BB @ 17'-11 1/2', DRILL 3' CC	A500 Gr. B
17	1		6X6' BB TOP TRANS @ 24'-9 3/4' LG W/EXP END & 6° 8' ANGLE	A500 Gr. B
18	1		6X6' BB BTM TRANS @ 25'-6 3/4' LG W/EXP END & 6° 8' ANGLE	A500 Gr. B
19	18	0080.03355	3/8" X 7 1/2" BOLT, NUT, & 2 FW	A307, A563, F436
20	19	0080.04100	1/2" x 1-1/2" BOLT, NUT, & FW	A307, A563, F436
21	16	0080.04120	1/2" x 1-1/2" BOLT, NUT, 2 FW & LW	A307, A563, F436
23	14	0080.06340	3/4' X 7-1/2" BOLT, NUT, 2 FW	A325, A563, F436
24	8	0080.06370	3/4' X 8' CARR BOLT, NUT, FW & LW	A307, A563, F436
26	1		PARAPET WALL CONNECTIONS W/ 6° 18' ANGLE	A572 Gr. 50, A615 Gr. 60, A709

HARDWARE NOTES	
ITEM #	FUNCTION
19	BOLT RAIL TO SHELF ANGLE (ITEM #10)
20	BOLT SHELF ANGLE (ITEM # 10) TO POST
21	BOLT BLOCK-OUTS (ITEM # 13) TO HEAVY POST (ITEM # 4)
23	SPLICE TUBING (ITEM #'S 7 & 12), & (4) PER PARAPET WALL CONNECTION (ITEM # 26)
24	BOLT RAIL (ITEMS #'S 17, & 18 TO BLOCK-OUTS (ITEM # 13)

ITEM #: 900.620 GEN CONTR: FR Lafayette - MIDDLEBURY, (2014)

SHEET 8 OF 8

APPROVED BY:

Galvanized 2-Rail Box Beam Guardrail Approach Section

EM13-252, MIDDLEBURY RS 0174 (8)

TOWN OF MIDDLEBURY, ADDISON COUNTY, VT RTE 125 (MAJOR COLLECTOR), BRIDGE NO : 13

REV	NO.	DATE	DESCRIPTION	BY
E	1	3/20/14	REVISED PER 3/18/14 MARK-UP	E.P.
V	2	4/2/14	REVISED PER 3/25/14 MARK-UP	E.P.

REV	NO.	DATE	DESCRIPTION	BY

ELDERLEE, INC.
OAKS CORNERS, NEW YORK 14518
E-Mail: dlong@elderlee.com / epeek@elderlee.com
Tel: 315-789-6670 Fax: 315-789-6615

CERTIFIED FABRICATOR

DRAWN	E.P.	3/7/14
CHECKED	D.L.	3/10/14
APPROVED	M.V.	.
SCALE	SCHEMATIC	
DRAWING NO.	FR L - MIDDLEBURY 2014	

WELDING PROCEDURE SPECIFICATION

PQR ELDERLEE #3

Material Specification	A572 TO A572
Welding Process	FCAW-G
Manual or Machine	SEMAUTOMATIC
Position of Welding	FLAT/HORIZONTAL
Filler Metal Specification	A5.29
Filler Metal Classification	E81T1-Ni1C-JH4
Flux	N/A
Shielding Gas	CO 2 Dew Point -40DEG F Flow Rate 50CFH
Single or Multiple Pass	SINGLE
Single or Multiple Arc	SINGLE
Welding Current	DC ELECTRODE POSITIVE
Polarity	REVERSE
Welding Progression	STRINGER
Root Treatment	PER D1.5
Preheat and Interpass Temperature	PER D1.5
Postheat Temperature	NONE
Heat Input	Min _____ Max _____

WELDING PROCEDURE

Pass no.	Electrode size	Welding Current Amperes	Welding Current Volts	Travel speed	Joint detail
1	1/16	310	25	11	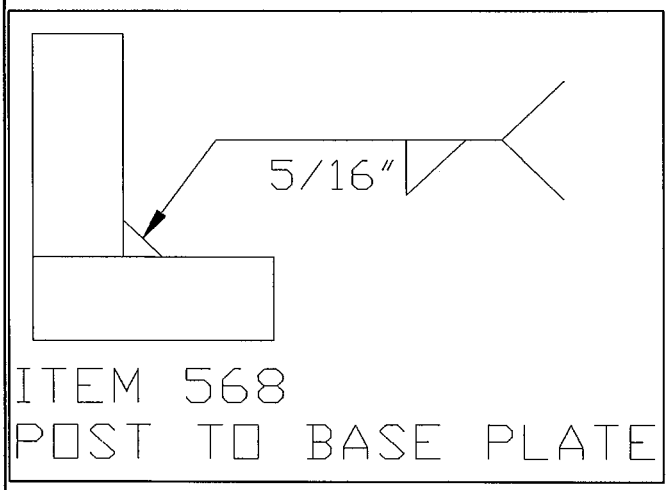
Variable	LIMITS	341 TO 269	27 TO 23	12 TO 10	

This procedure may vary due to fabrication sequence, fit-up, pass size, etc., within the limitation of variables given in Section 5.

Procedure No. 3002

Revision No. _____

Contractor Elderlee, Inc.

Authorized By RANDY SCOTT

Date 3/20/2014

WELDING PROCEDURE SPECIFICATION

PQR ELDERLEE#3

Material Specification	A500 GR B
Welding Process	FCAW-G
Manual or Machine	SEMAUTOMATIC
Position of Welding	FLAT/HORIZONTAL
Filler Metal Specification	A5.29
Filler Metal Classification	E81T1-Ni1C-JH4
Flux	N/A
Shielding Gas	CO 2 Dew Point -40DEG F Flow Rate 50CFH
Single or Multiple Pass	SINGLE
Single or Multiple Arc	SINGLE
Welding Current	DC
Polarity	REVERSE ELECTRODE POSITIVE
Welding Progression	STRINGER
Root Treatment	PER D1.5
Preheat and Interpass Temperature	PER D1.5
Postheat Temperature	NONE
Heat Input	Min Max

WELDING PROCEDURE

Pass no.	Electrode size	Welding Current Amperes	Welding Current Volts	Travel speed	Joint detail
1	1/16	310	25	11	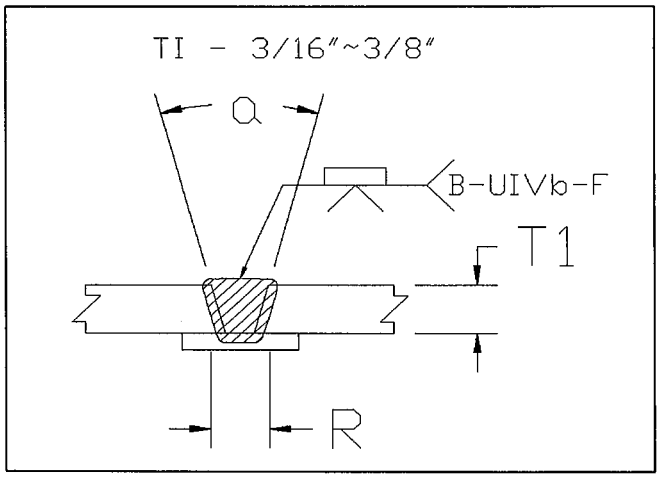
Variable	LIMITS	341 TO 269	27 TO 23	12 TO 10	

This procedure may vary due to fabrication sequence, fit-up, pass size, etc., within the limitation of variables given in Section 5.

Procedure No. 3007

Revision No.

Contractor Elderlee, Inc.

Authorized By RANDY SCOTT

Date 3/20/2014

WELDING PROCEDURE SPECIFICATION

PQR ELDERLEE #3

Material Specification	A709 TO A500 GR B
Welding Process	FCAW-G
Manual or Machine	SEMAUTOMATIC
Position of Welding	FLAT/HORIZONTAL
Filler Metal Specification	A5.29
Filler Metal Classification	E81T1-Ni1C-JH4
Flux	N/A
Shielding Gas	CO 2 Dew Point -40DEG F Flow Rate 50CFH
Single or Multiple Pass	SINGLE
Single or Multiple Arc	SINGLE
Welding Current	DC
Polarity	REVERSE ELECTRODE POSITIVE
Welding Progression	STRINGER
Root Treatment	D1.5
Preheat and Interpass Temperature	D1.5
Postheat Temperature	NONE
Heat Input	Min Max

WELDING PROCEDURE

Pass no.	Electrode size	Welding Current Amperes	Welding Current Volts	Travel speed	Joint detail
1	1/16	310	25	11	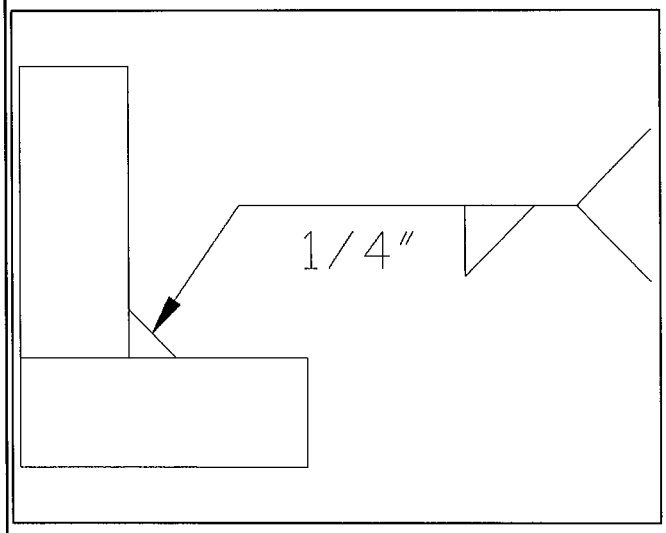
Variable	LIMITS	341 TO 269	27 TO 23	12 TO 10	

This procedure may vary due to fabrication sequence, fit-up, pass size, etc., within the limitation of variables given in Section 5.

Procedure No. 3009

Revision No.

Contractor Elderlee, Inc.

Authorized By RANDY SCOTT

Date 3/20/2014

WELDING PROCEDURE SPECIFICATION

PQR ELDERLEE #3

Material Specification	ASTM-A500-A53-GRADE B TO A36
Welding Process	FCAW-G
Manual or Machine	SEMAUTOMATIC
Position of Welding	1G
Filler Metal Specification	A5.29
Filler Metal Classification	E81T1-Ni1C-JH4
Flux	N/A
Shielding Gas	CO 2 Dew Point -40DEG F FLOW RATE 50 CFH
Single or Multiple Pass	SINGLE
Single or Multiple Arc	SINGLE
Welding Current	DC
Polarity	REVERSE ELECTRODE POSITIVE
Welding Progression	STRINGER
Root Treatment	PER D1.5
Preheat and Interpass Temperature	PER. D1.5
Postheat Temperature	NONE
Heat Input	Min Max

WELDING PROCEDURE

Pass no.	Electrode size	Welding Current Amperes	Welding Current Volts	Travel speed	Joint detail
1	1/16	310	25	11	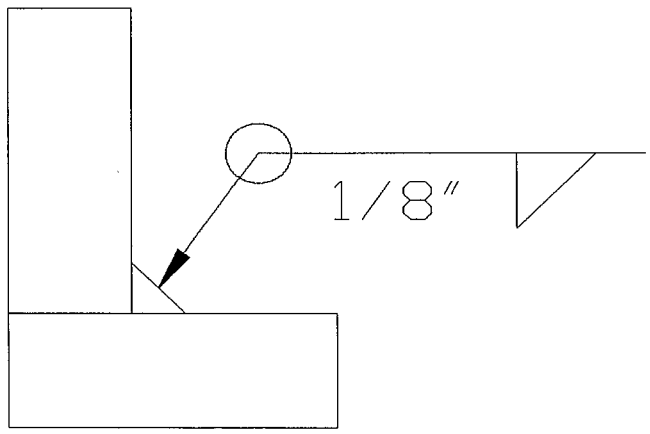
Variable	LIMITS	341 TO 269	27 TO 23	12 TO 10	

This procedure may vary due to fabrication sequence, fit-up, pass size, etc., within the limitation of variables given in Section 5.

Procedure No. 3012

Revision No.

Contractor Elderlee, Inc.

Authorized By RANDY SCOTT

Date 3/20/2014

WELDING PROCEDURE SPECIFICATION

PQR ELDERLEE #3

Material Specification	ASTM A572 GR. 50
Welding Process	FCAW-G
Manual or Machine	SEMAUTOMATIC
Position of Welding	FLAT/HORIZONTAL
Filler Metal Specification	A5.29
Filler Metal Classification	E81T1-Ni1C-JH4
Flux	N/A
Shielding Gas	CO 2 Dew Point -40DEG F Flow Rate 50CFH
Single or Multiple Pass	SINGLE
Single or Multiple Arc	SINGLE
Welding Current	DC
Polarity	REVERSE ELECTRODE POSITIVE
Welding Progression	STRINGER
Root Treatment	CLEAN PER D1.5
Preheat and Interpass Temperature	PER D1.5
Postheat Temperature	NONE
Heat Input	Min Max

WELDING PROCEDURE

Pass no.	Electrode size	Welding Current Amperes	Welding Current Volts	Travel speed	Joint detail
1	1/16	310	25	11	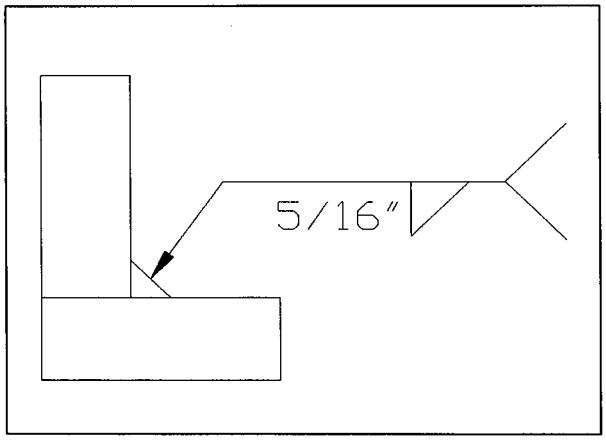
Variable	LIMITS	341 TO 269	27 TO 23	12 TO 10	

This procedure may vary due to fabrication sequence, fit-up, pass size, etc., within the limitation of variables given in Section 5.

Procedure No. 3019

Revision No.

Contractor Elderlee, Inc.

Authorized By RANDY SCOTT

Date 3/20/2014

WELDING PROCEDURE SPECIFICATION

Material Specification	ASTM A36-08
Welding Process	GMAW
Manual or Machine	SEMIAUTOMATIC/ROBOTIC
Position of Welding	FLAT/HORIZONTAL
Filler Metal Specification	A5.18
Filler Metal Classification	L-56 LINCOLN
Flux	N/A
Shielding Gas	90% ARGON /10% CO2 Dew Point -40DEG F Flow Rate 45CFH
Single or Multiple Pass	SINGLE
Single or Multiple Arc	SINGLE
Welding Current	DC
Polarity	REVERSE
Welding Progression	STRINGER
Root Treatment	PER D1.5
Preheat and Interpass Temperature	PER D1.5
Postheat Temperature	NONE
Heat Input	Min _____ Max _____

WELDING PROCEDURE

Pass no.	Electrode size	Welding Current Amperes	Welding Current Volts	Travel speed	Joint detail
	.045	190	22	19	
Variable	LIMITS	171 TO 209	20 TO 24	17 TO 21	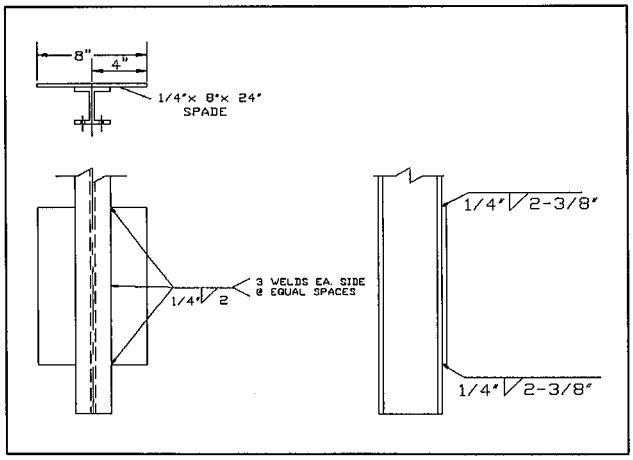

This procedure may vary due to fabrication sequence, fit-up, pass size, etc., within the limitation of variables given in Section 5.

Procedure No. 3022

Revision No. _____

Contractor Elderlee, Inc.

Authorized By RANDY SCOTT

Date 3/20/2014

WELDING PROCEDURE SPECIFICATION

PQR ELDERLEE #3

Material Specification	ASTM A572 GR. 50 CVN	A500 GR B
Welding Process	FCAW-G	
Manual or Machine	SEMAUTOMATIC	
Position of Welding	FLAT/HORIZONTAL	
Filler Metal Specification	A5.29	
Filler Metal Classification	E81T1-Ni1C-JH4	
Flux	N/A	
Shielding Gas	CO 2	Dew Point -40DEG F Flow Rate 50CFH
Single or Multiple Pass	SINGLE	
Single or Multiple Arc	SINGLE	
Welding Current	DC	
Polarity	REVERSE ELECTRODE POSITIVE	
Welding Progression	STRINGER	
Root Treatment	PER D1.5	
Preheat and Interpass Temperature	PER D1.5	
Postheat Temperature	NONE	
Heat Input	Min	Max

WELDING PROCEDURE

Pass no.	Electrode size	Welding Current Amperes	Welding Current Volts	Travel speed	Joint detail
1	1/16	310	25	11	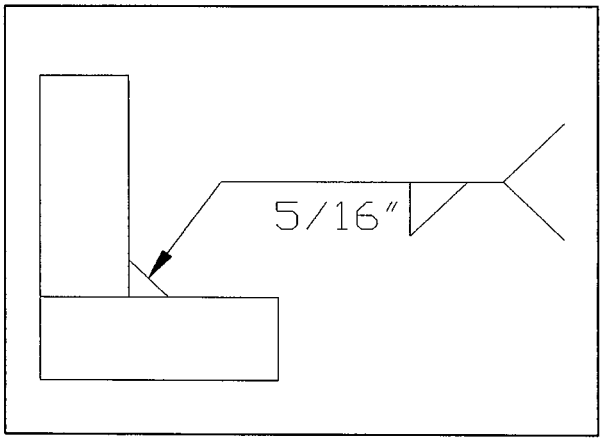
Variable	LIMITS	341 TO 269	27 TO 23	12 TO 10	

This procedure may vary due to fabrication sequence, fit-up, pass size, etc., within the limitation of variables given in Section 5.

Procedure No. 3037

Revision No.

Contractor Elderlee, Inc.

Authorized By RANDY SCOTT

Date 3/20/2014