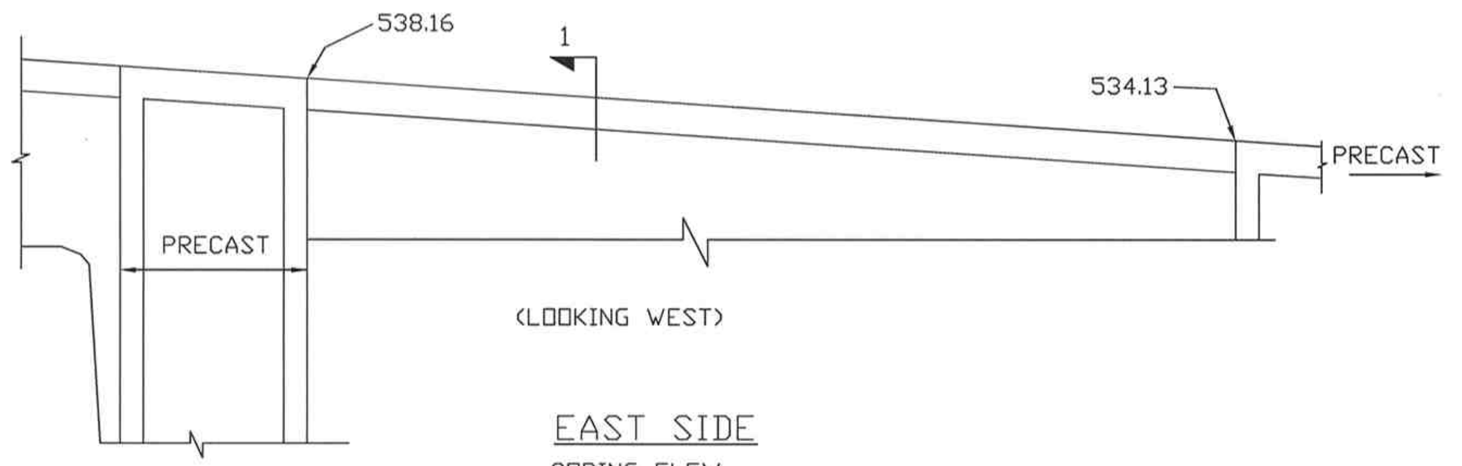

EAST SIDE
COPING ELEV.
CONTRACT REF. SHEET 73

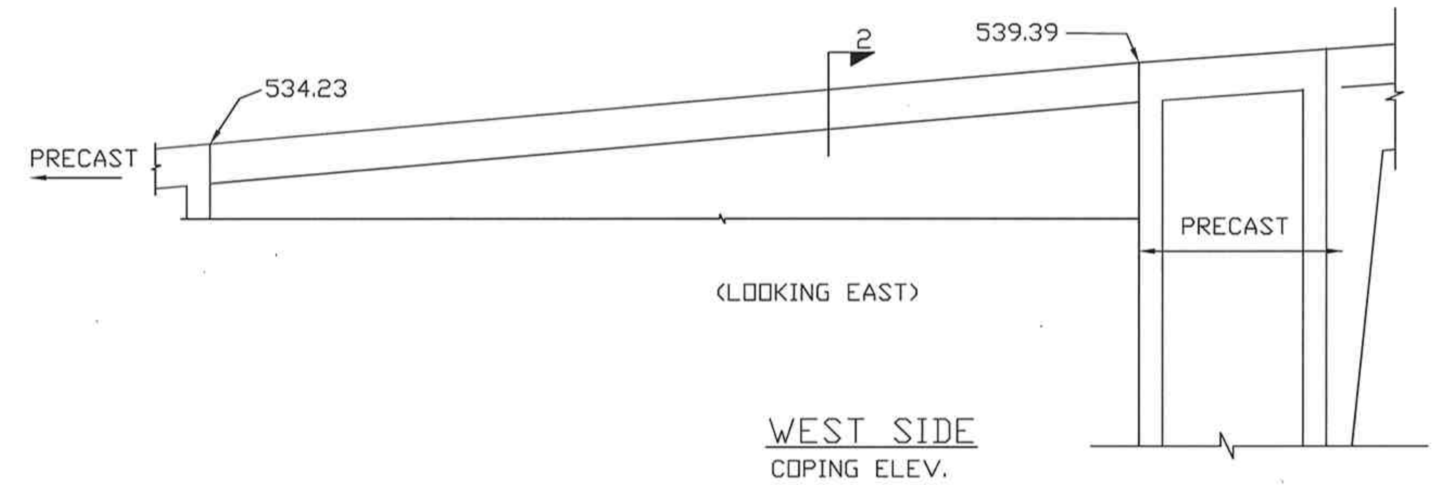

WEST SIDE
COPING ELEV.
CONTRACT REF. SHEET 72

Release Number: 005								BAR LIST								
Bar Mark	Qty	Size	Total Length	Type	'A'	'B'	'C'	'D'	'E'	'F'	'G'	'H'	'J'	'K'	'O'	'R'
5BZ01	60	#5	2'-6"	20		0'-10"	0'-10"	0'-10"								
Release Number: 006								BAR LIST								
Bar Mark	Qty	Size	Total Length	Type	'A'	'B'	'C'	'D'	'E'	'F'	'G'	'H'	'J'	'K'	'O'	'R'
4BZ01	2	#4	5'-10 ½"	17		2'-8"	0'-6 ½"	2'-8"								
4BZ02	2	#4	6'-4 ½"	17		2'-11"	0'-6 ½"	2'-11"								
4BZ03	2	#4	6'-10 ½"	17		3'-2"	0'-6 ½"	3'-2"								
4BZ04	2	#4	7'-4 ½"	17		3'-5"	0'-6 ½"	3'-5"								
4BZ05	10	#4	7'-6 ½"	17		3'-6"	0'-6 ½"	3'-6"								
4BZ06	5	#4	6'-0 ¾"	S11		6'-0 ¾"						2'-11"			0'-6 ½"	
4BZ07	6	#4	5'-10 ¾"	S11		5'-10 ¾"						2'-10"			0'-6 ½"	
4BZ08	6	#4	5'-8 ¾"	S11		5'-8 ¾"						2'-9"			0'-6 ½"	
4BZ09	6	#4	5'-6 ¾"	S11		5'-6 ¾"						2'-8"			0'-6 ½"	
4BZ10	5	#4	5'-4 ¾"	S11		5'-4 ¾"						2'-7"			0'-6 ½"	
4BZ11	6	#4	5'-2 ¾"	S11		5'-2 ¾"						2'-6"			0'-6 ½"	
4BZ12	6	#4	5'-0 ¾"	S11		5'-0 ¾"						2'-5"			0'-6 ½"	
4BZ13	5	#4	4'-10 ¾"	S11		4'-10 ¾"						2'-4"			0'-6 ½"	
4BZ14	4	#4	5'-2 ¾"	3		2'-9"	2'-5 ¾"					0'-9 ¾"		2'-4 ¼"	5'-1 ¼"	
4BZ22	45	#4	4'-8 ¾"	S11		4'-8 ¾"						2'-3"			0'-6 ½"	
4BZ23	64	#4	3'-8 ¾"	S11		3'-8 ¾"						1'-9"			0'-6 ½"	
Release Number: 007								BAR LIST								
Bar Mark	Qty	Size	Total Length	Type	'A'	'B'	'C'	'D'	'E'	'F'	'G'	'H'	'J'	'K'	'O'	'R'
4BZ01	2	#4	5'-10 ½"	17		2'-8"	0'-6 ½"	2'-8"								
4BZ02	2	#4	6'-4 ½"	17		2'-11"	0'-6 ½"	2'-11"								
4BZ03	2	#4	6'-10 ½"	17		3'-2"	0'-6 ½"	3'-2"								
4BZ04	2	#4	7'-4 ½"	17		3'-5"	0'-6 ½"	3'-5"								
4BZ05	10	#4	7'-6 ½"	17		3'-6"	0'-6 ½"	3'-6"								
4BZ06	45	#4	6'-0 ¾"	S11		6'-0 ¾"						2'-11"			0'-6 ½"	
4BZ14	4	#4	5'-2 ¾"	3		2'-9"	2'-5 ¾"					0'-9 ¾"		2'-4 ¼"	5'-1 ¼"	
4BZ15	6	#4	6'-4 ¾"	S11		6'-4 ¾"						3'-1"			0'-6 ½"	
4BZ16	7	#4	6'-2 ¾"	S11		6'-2 ¾"						3'-0"			0'-6 ½"	
4BZ17	6	#4	6'-6 ¾"	S11		6'-6 ¾"						3'-2"			0'-6 ½"	
4BZ18	7	#4	6'-8 ¾"	S11		6'-8 ¾"						3'-3"			0'-6 ½"	
4BZ19	6	#4	6'-10 ¾"	S11		6'-10 ¾"						3'-4"			0'-6 ½"	
4BZ20	6	#4	7'-0 ¾"	S11		7'-0 ¾"						3'-5"			0'-6 ½"	
4BZ21	7	#4	7'-2 ¾"	S11		7'-2 ¾"						3'-6"			0'-6 ½"	
4BZ23	64	#4	3'-8 ¾"	S11		3'-8 ¾"						1'-9"			0'-6 ½"	
Release Number: 008								BAR LIST								
Bar Mark	Qty	Size	Total Length	Type	'A'	'B'	'C'	'D'	'E'	'F'	'G'	'H'	'J'	'K'	'O'	'R'
4B01	22	#4	5'-9"	T2	0'-4 ½"	0'-9"	1'-9"	0'-9"	1'-9"		0'-4 ½"					
5B01	8	#5	2'-1"	17		0'-10"	1'-3"									

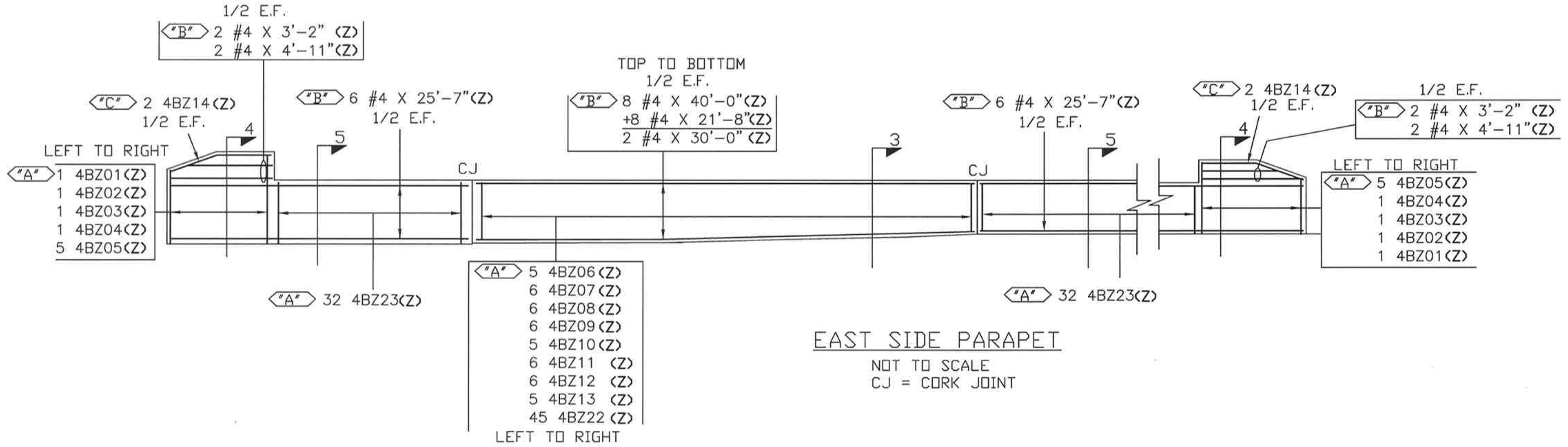

EAST SIDE PARAPET
NOT TO SCALE
CJ = CORK JOINT

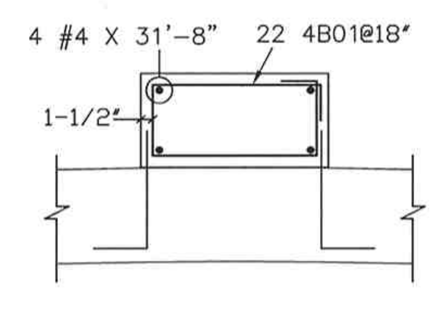

CROWN BEAM REINF
32'-0" X 2'-0" X 1'-0"
CONTRACT REF. SHEET 70

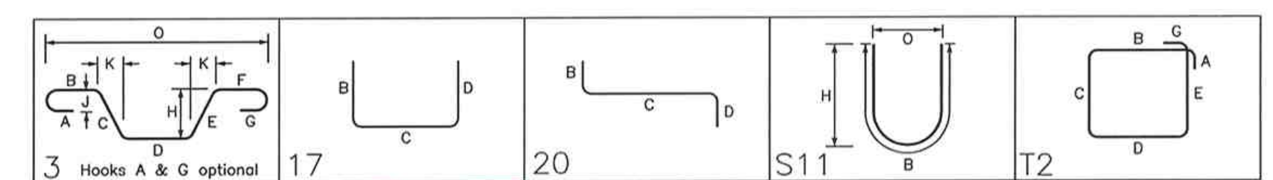

Add Test Bars

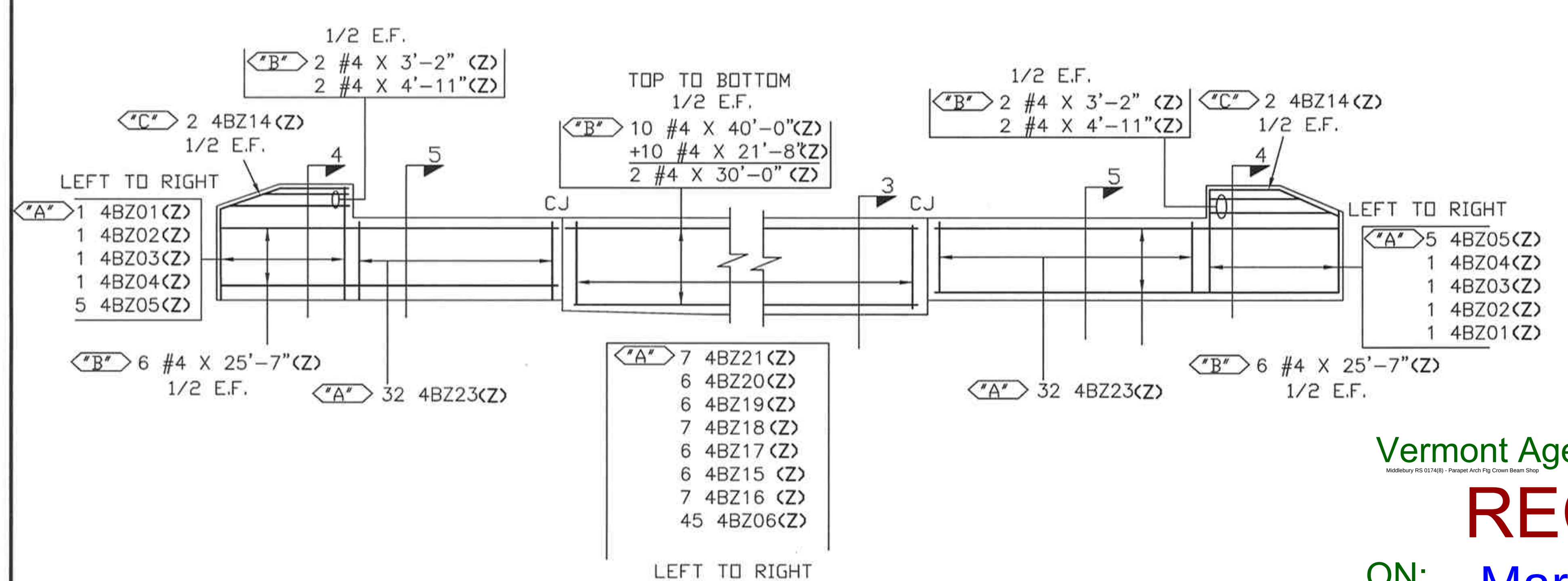

WEST SIDE PARAPET
NOT TO SCALE
CJ = CORK JOINT

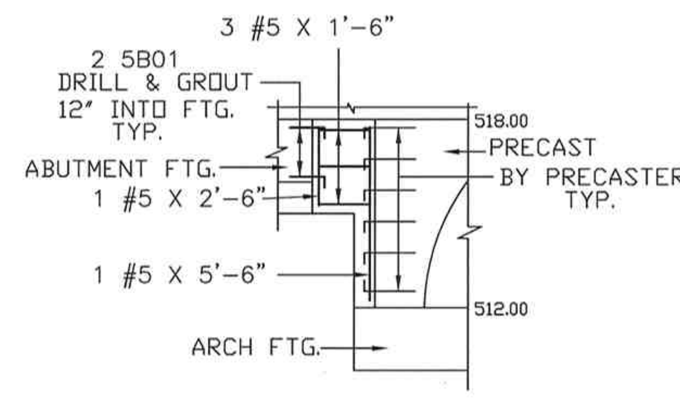

NW CORNER

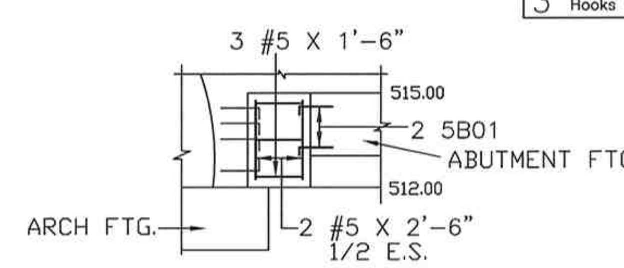

SW CORNER

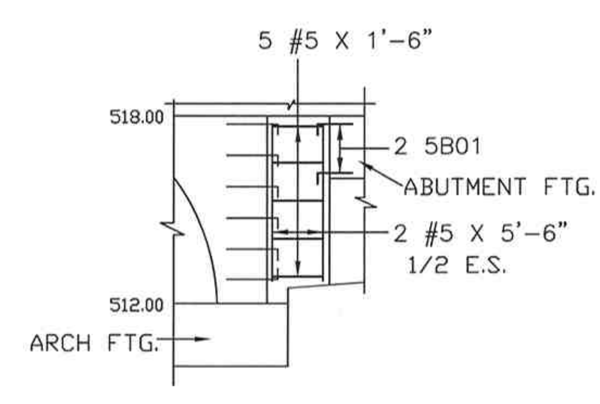

NE CORNER

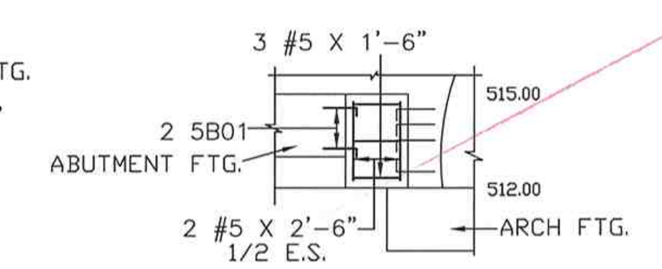

SE CORNER

PANEL CLOSURE POURS
FLD. ADJ. AS REQ.
CONTRACT REF. SHEET 75

ELEVATIONS & DIMENSIONS SHOWN ON THIS DWG. ARE FOR REINF. DETAILING PURPOSES ONLY AND ARE NOT INTENDED FOR CONSTRUCTION.

REINF. BARS ASTM A615 GRADE 60

DUAL COAT REINF. BARS ASTM A615 GRADE 60 MARKED (Z)

VERIFICATION OF UNCLEAR INFORMATION MAY BE REQUESTED ON THIS DRAWING. SHOULD VERIFICATION BE LEFT UN-ADDRESSED IT WILL REMAIN AS SHOWN AND ASSUMED TO BE CORRECT.

OK
PLEASE CONFIRM

Z BAR	
LAP CHART	
BAR SIZE	LAP
#4	2'-0"
#5	2'-6"

Vermont Agency of Transportation
RECEIVED
ON: March 11, 2014
and Checked for
CONFORMANCE
BY: Jennifer Fitch DATE: 03/14/2014

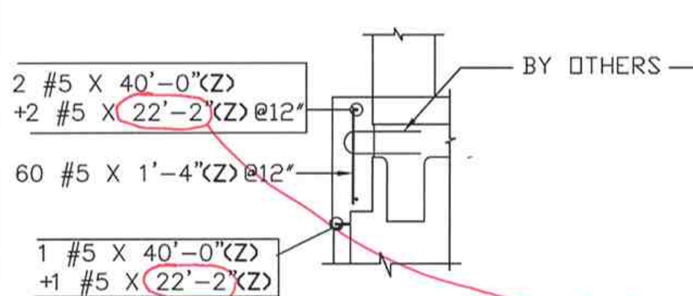

SECT. 1
EAST SIDE COPING REINF.
CONTRACT REF. SHEET 80

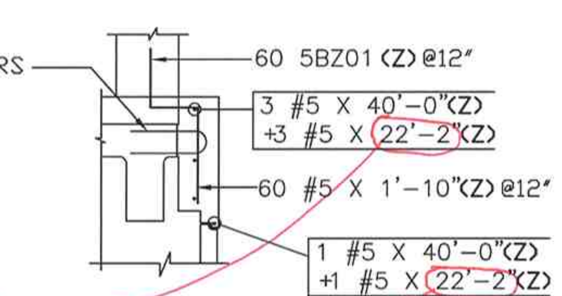

SECT. 2
WEST SIDE COPING REINF.
CONTRACT REF. SHEET 80

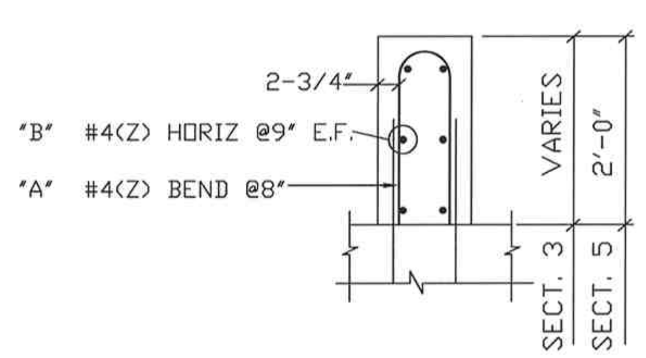

SECT. 3/SECT. 5
CONTRACT REF. SHEET 79

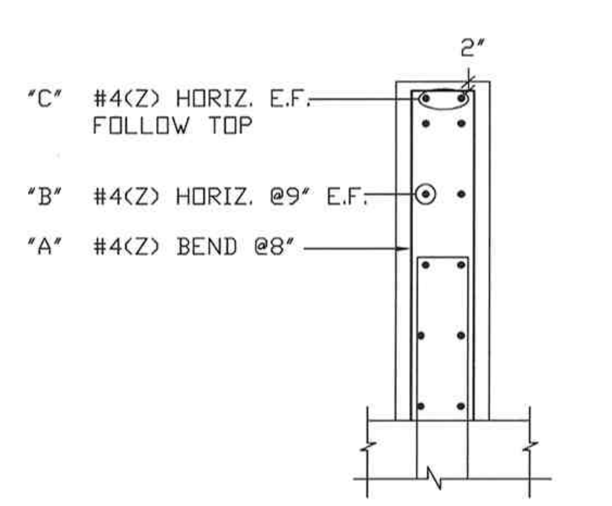

SECT. 4
CONTRACT REF. SHEET 80

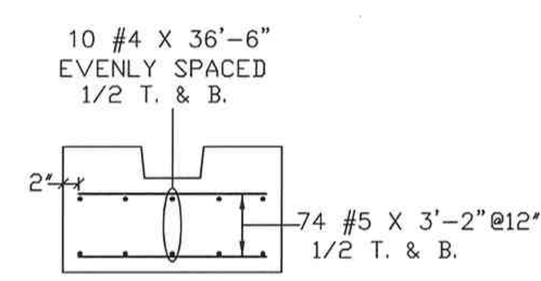

ARCH FOOTING
37'-0" X 3'-6" X 2'-0"
2 THUS
CONTRACT REF. SHEET 70

SHOP DRAWING REVIEW
☐ REVIEWED AS REQUIRED BY THE CONSTRUCTION CONTRACT DOCUMENTS AND APPROVED, BUT ONLY FOR CONFORMANCE TO THE DESIGN CONCEPT OF THE WORK, AND SUBJECT TO FURTHER LIMITATIONS AND REQUIREMENTS CONTAINED IN THE CONSTRUCTION CONTRACT DOCUMENTS.
☐ REJECTED ☒ REVISE AND RESUBMIT ☐ FURNISH AS CORRECTED
CORRECTIONS OR COMMENTS MADE ON THE SHOP DRAWINGS DURING THIS REVIEW DO NOT RELIEVE CONTRACTOR FROM COMPLIANCE WITH REQUIREMENTS OF THE DRAWINGS AND SPECIFICATIONS. THIS CHECK IS ONLY FOR REVIEW OF GENERAL CONFORMANCE WITH THE DESIGN CONCEPT OF THE PROJECT AND GENERAL COMPLIANCE WITH THE INFORMATION GIVEN IN THE CONTRACT DOCUMENTS. THE CONTRACTOR IS RESPONSIBLE FOR: CONFIRMING AND CORRELATING ALL QUANTITIES AND DIMENSIONS; SELECTING FABRICATION PROCESSES AND TECHNIQUES OF CONSTRUCTION; COORDINATING HIS WORK WITH THAT OF ALL OTHER TRADES; AND PERFORMING HIS WORK IN A SAFE AND SATISFACTORY MANNER.
VHB Vanasse Hangen Brustlin, Inc.
Job Number: 57438.00
Reviewed By: B Masse
Date: 3-12-14

FOR APPROVAL

LEGEND:
CONT.-CONTINUOUS
TRANS.-TRANSVERSE
DWLS.-DOWELS
VERTS.-VERTICAL
HORIZ.-HORIZONTAL
T&B -TOP & BOTTOM
I.F.-INNER FACE
O.F.-OUTER FACE
E.E.-EACH END
E.F.-EACH FACE
F.F.-FRONT FACE
R.F.-REAR FACE
E.W.-EACH WAY
O.C.-ON CENTER
L.W.-LONG WAY
S.W.-SHORT WAY

	DATE	REV.#	SENT FOR
6			
5			
4			
3			
2			
1	03/05/14	0	APPROVAL

DIMENSION
DIMENSION FABRICATORS INC.
2000 7TH STEET
SCOTIA, N.Y. 12302
PH: (518) 374-1936
FAX (518) 374-4830
www.dimensionfabricators.com

STRUCTURE: VTAOT MIDDLEBURY RS 0174(8)
LOCATION: VT RT 125 OVER MIDDLEBURY RIVER, MIDDLEBURY VT.
ARCHITECT: VHB
ENGINEER:
CUSTOMER: T BUCK CONSTRUCTION, INC.
DRAWN BY: WAYNE
DATE: 03/05/14
DFI #: 8760
DRAWING COVERS: PARAPETS/ ARCH FTGS., CROWN BEAM & CLOSURE POUR REINF.
DRAWING #: B