T. Buck Construction, Inc.

249 Merrow Road, Auburn, Maine 04210-8319
*(207) 783-6223 * (FAX) 783-3970*

Plan to install new Water Main

BRIDGE PROJECT

Middlebury, VT
VERMONT AGENCY OF TRANSPORTATION

RS 0174(8)

Submitted 3/19/14

Introduction

The purpose of this plan is to outline our intensions to take the existing waterline out of service and install the new waterline in accordance with the plans and specs.

Currently there are two waterlines that come down the mountain along route 125. One of those two lines turns and crosses the existing bridge while the other continues down a small dirt road (presumably a ROW). Because of the second line, the one across the bridge becomes expendable during construction.

Preconstruction Activities

We plan to cut and cap the existing water main outside the limits of our excavation, specifically speaking we will cut and cap the line near station 138+25 and station 140+25. The exact location is to be determined in the field.

We would like to complete this work prior to the closure period which begins on April 19th. Depending on the availability of all interested parties, we would like to complete this work during the week of April 7th.

Cutting and capping the waterline before the closure will reduce the chance of any unforeseen conditions slowing the project down and bringing everything else to a stop.

Installation of New Materials

A list of material cut sheets can be seen at the end of this plan.

In general, the pipe and fittings will be purchased from EJ Prescott while the hangers and other supports will be purchased from NEFCO Corp, and ARC enterprises respectively.

We plan to hang the waterline from the approved hanger system before we fly NEXT Beam #2 (NB2). The pipe hanging from the bridge will consist of two complete pieces of pipe with the mechanical joint centered in the bridge. There will be 4 hangers (2 on each piece of pipe) before the pipe is supported by the specified galvanized beam as shown in the contract drawings. The pipe will slope down to the hole through each abutment.

The pipe coming in from each approach will be installed when the backfilling operations have reached the applicable elevation. We plan to run pipe from each location described above towards the bridge and through the sleeve. The pipe will be cut to length so that the specified fittings can be installed and the variable length piece of pipe can connect the pipe from where it comes out of the sleeve to the end of the pipe which is hanging from the bridge. The fittings and pieces will have to be field fit as we are unsure of the exact dimensions at this point.

The pipe will be connected to an 8” Gate valve near station 138+00 and completely connected across the bridge all the way to within a foot or two of the cap near station 140+25. We will test the pipe in accordance with the special provisions and we will be in constant communication with all interested parties.

After the pipe has been tested to the satisfaction of the engineer, we will insulate the pipe in place and then connect the new line and activate it.

Applicable Plan Sheets

This page is intentionally left blank

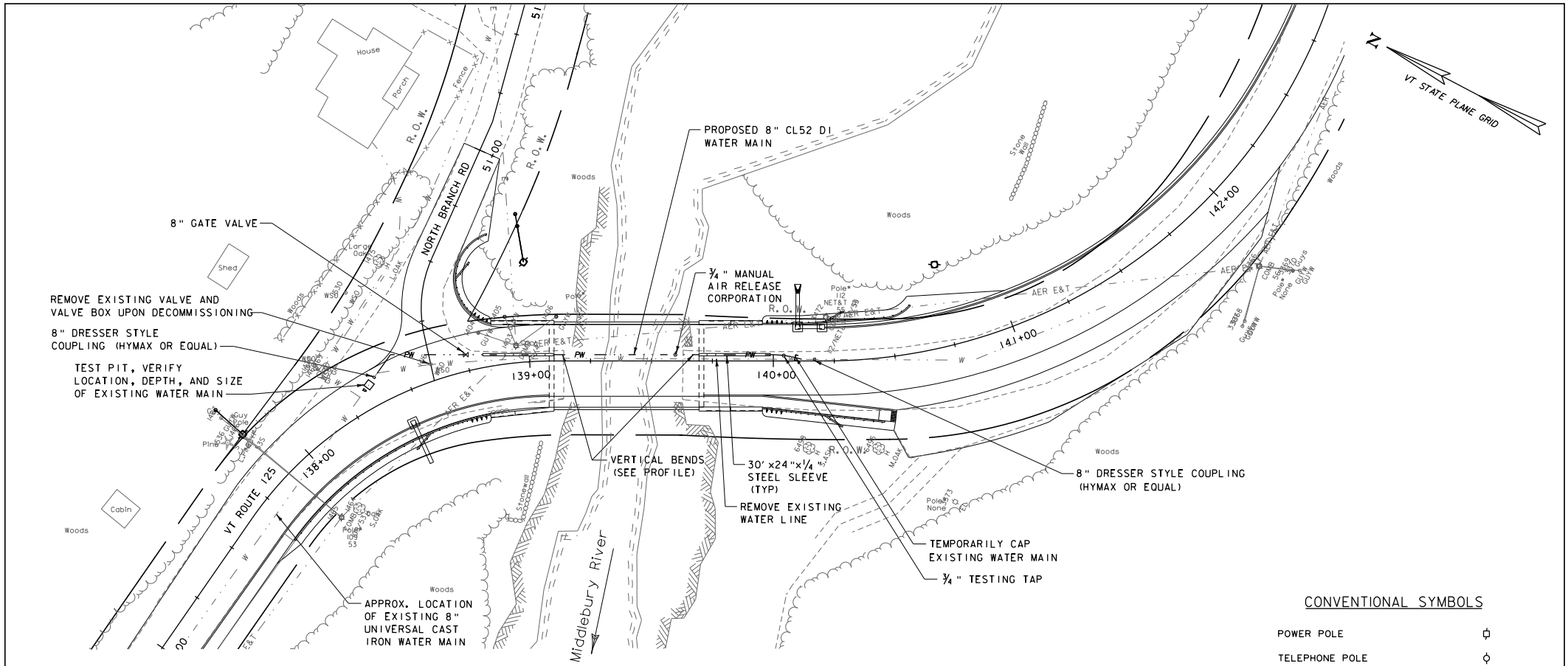

NOTES:

1. ALL WATER MAIN CONSTRUCTION AND TESTING SHALL BE IN ACCORDANCE WITH THE VERMONT WATER SUPPLY RULE, THE VERMONT AGENCY OF TRANSPORTATION STANDARD SPECIFICATIONS SECTION 629, AND THE EAST MIDDLEBURY PRUDENTIAL COMMITTEE STANDARDS AND REQUIREMENTS.

2. ALL EXISTING WATER MAINS, FITTINGS, AND APPURTENANCES TO BE DECOMMISSIONED SHALL BE REMOVED AND PROPERLY DISPOSED OF. ALL COSTS FOR THIS WORK WILL BE CONSIDERED INCIDENTAL TO CONTRACT ITEM 900.645, SPECIAL PROVISION (WATER MAIN ON BRIDGE) (8").

3. INSTALL ALL BURIED WATER MAIN FITTINGS AND APPURTENANCES WITH RESTRAINED MECHANICAL JOINTS AND CONCRETE THRUST BLOCKS.

4. MECHANICAL JOINTS SHALL BE MEGALUG RESTRAINED MECHANICAL JOINTS WITH MINIMUM PRESSURE RATING OF 350 PSI, AS MANUFACTURED BY EBAA IRON WORKS, INC.

5. CONTRACTOR TO COORDINATE HANGER SPACING, LOCATIONS, AND HARDWARE.

6. CONTRACTOR TO CONFIRM ALL PIPE LENGTHS AND FITTINGS BASED ON FIELD CONDITIONS BEFORE ORDERING.

7. CONTRACTOR TO SUBMIT DIMENSIONS, LOCATIONS, AND MANUFACTURER'S INFORMATION FOR ALL WATER MAIN CONSTRUCTION MATERIALS, INCLUDING PIPE, VALVE, VALVE BOX, FITTINGS, HANGERS, BRACES, AND APPURTENANCES. INCLUDE A DETAILED PLAN OF COMPONENTS, LOCATIONS, AND DIMENSIONS BENEATH THE BRIDGE.

8. ALL COSTS FOR STEEL SLEEVES, INCLUDING CASING SPACERS, SLEEVE DRAINS, LINK SEALS, AND CASING ENDS SHALL BE INCLUDED IN ITEM 900.645, SPECIAL PROVISION (WATER MAIN ON BRIDGE) (8").

9. ALL COSTS FOR DUCTILE IRON PIPE, INCLUDING MECHANICAL JOINTS, COUPLINGS, PIPE HANGER ASSEMBLIES, FITTINGS, AND TESTING SHALL BE INCLUDED IN ITEM 900.645, SPECIAL PROVISION (WATER MAIN ON BRIDGE) (8").

10. ANY DAMAGE TO THE ROADWAY INCURRED DURING INSTALLATION OF THE NEW WATERLINE SHALL BE REPAIRED TO THE ORIGINAL CONDITION. THIS WORK SHALL BE INCIDENTAL TO WATERLINE CONTRACT ITEMS.

CONVENTIONAL SYMBOLS

POWER POLE	
TELEPHONE POLE	
PROPOSED WATER	PW
EXISTING FIRE HYDRANT	
PROPOSED WATER VALVE	
EXISTING WATER VALVE	WSO
PROPOSED UTILITY POLE	
PROPOSED OVERHEAD LINE	AER E&T
PROPOSED EXPANSION JOINT	
PROPOSED ¾" TEST TAP	
PROPOSED COUPLING	
PROPOSED ¾" AIR RELEASE	

SCALE 1" = 20'-0"
20 0 20

VHB Vanasse Hangen Brustlin, Inc.

PROJECT NAME: MIDDLEBURY	
PROJECT NUMBER: RS 0174(8)	
FILE NAME: z78f217_wtr.dgn	PLOT DATE: 8/27/2013
PROJECT LEADER: M.A. COLGAN	DRAWN BY: B.J. MASSE
DESIGNED BY: T. GINGRAS	CHECKED BY: M.J. LEO
WATERLINE LAYOUT SHEET	SHEET 31 OF 104

VHB 57438

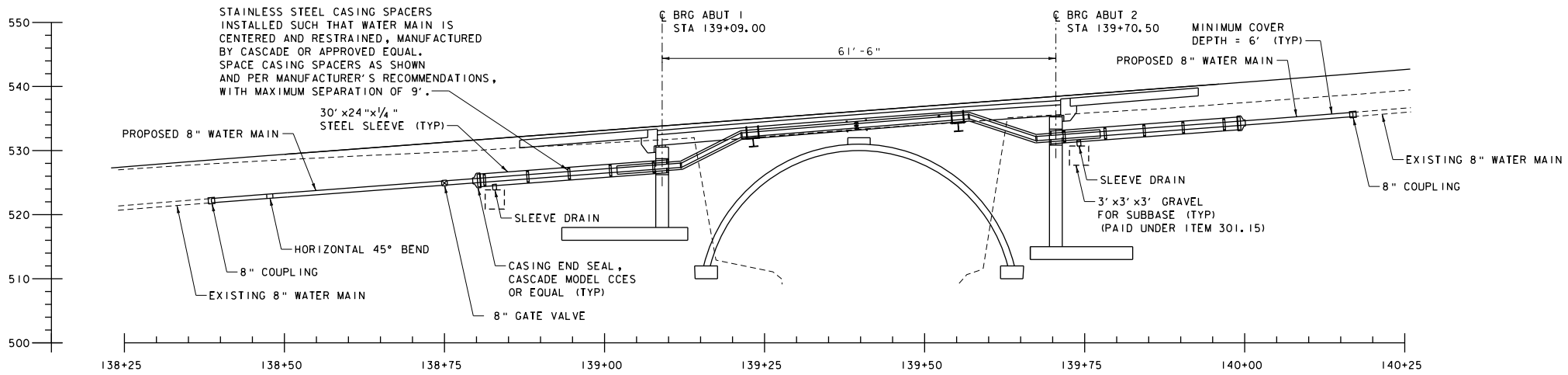

WATER MAIN SECTION

SCALE 1/8" = 1'-0"

NOTES:

1. ALL WATER MAIN BETWEEN STATIONS 138+40-140+20 SHALL BE MJ x MJ PIPE.
2. EXTEND JOINTS AND ENGAGE RESTRAINTS FOR ALL FITTINGS AND CONNECTIONS PRIOR TO PLACING WATER MAIN IN SERVICE.

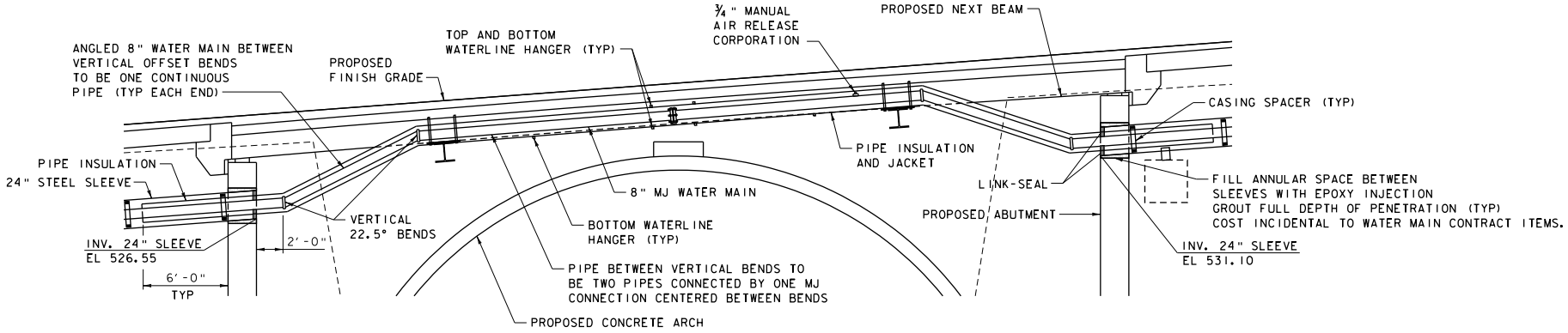

WATER MAIN BRIDGE CROSSING DETAIL

SCALE 1/4" = 1'-0"

Vanasse Hangen Brustlin, Inc.

PROJECT NAME: MIDDLEBURY	
PROJECT NUMBER: RS 0174(8)	
FILE NAME: z78f217_wtr.dgn	PLOT DATE: 8/27/2013
PROJECT LEADER: M.A. COLGAN	DRAWN BY: B.J. MASSE
DESIGNED BY: T. GINGRAS	CHECKED BY: M.J. LEO
WATERLINE DETAILS (1OF 2)	SHEET 32 OF 104

VHB 57438

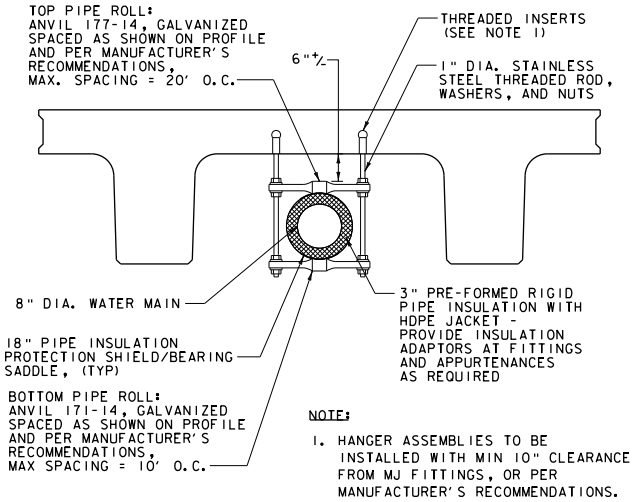

NOTE:

1. HANGER ASSEMBLIES TO BE INSTALLED WITH MIN 10" CLEARANCE FROM MJ FITTINGS, OR PER MANUFACTURER'S RECOMMENDATIONS.

WATER MAIN HANGER CONNECTION DETAIL

SCALE 1" = 1'-0"

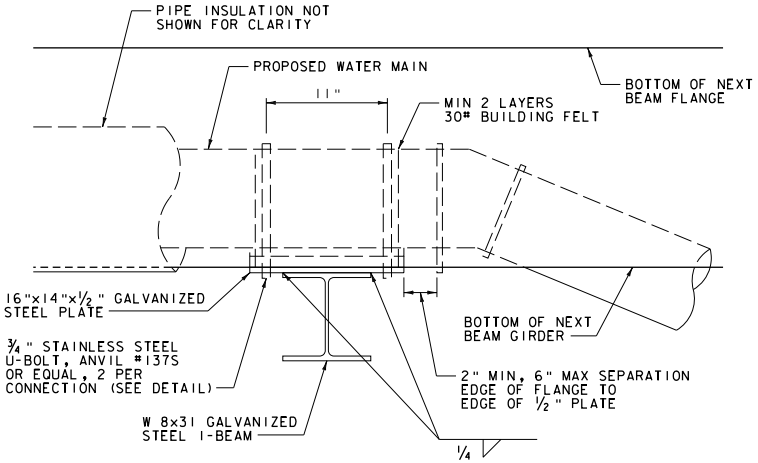

PROFILE VIEW

BRACED CONNECTION DETAIL

SCALE 2" = 1'-0"

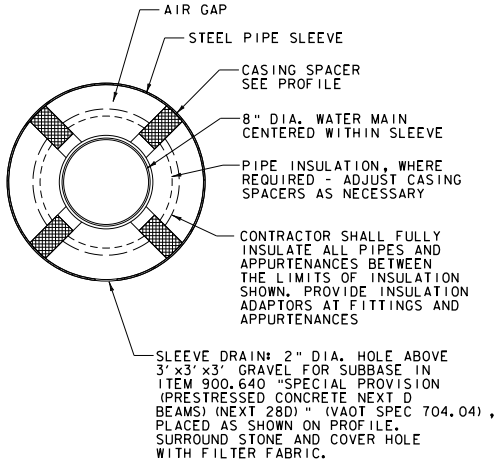

WATER SLEEVE CROSS-SECTION DETAIL

SCALE 2" = 1'-0"

TABLE OF DIMENSIONS

BENDS	B	C	D	E	F	BENDS	B	C	D	E	F
6" 11 1/4°	8"	15"	12"	24"	12"	6" 45°	8"	30"	12"	24"	14"
6" 22 1/2°	8"	19"	12"	24"	13"	6" 90°	8"	30"	12"	24"	27"
8" 11 1/4°	8"	20"	12"	24"	12"	8" 45°	8"	30"	12"	24"	24"
8" 22 1/2°	8"	22"	12"	24"	17"	8" 90°	8"	38"	12"	24"	36"
12" 11 1/4°	8"	30"	12"	24"	15"	12" 45°	8"	40"	12"	24"	40"
12" 22 1/2°	8"	35"	12"	24"	25"	12" 90°	8"	60"	12"	24"	52"

BENDS

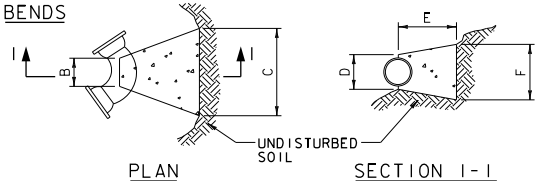

PLAN

SECTION 1-1

TABLE OF DIMENSIONS

TEES	G	H	I	J	TEES	G	H	I	J
6"x 6"x 6"	12"	24"	24"	18"	12"x 12"x 6"	12"	24"	24"	18"
8"x 8"x 6"	12"	24"	24"	18"	12"x 12"x 8"	12"	24"	24"	24"
8"x 8"x 8"	12"	24"	24"	24"	12"x 12"x 12"	12"	36"	24"	36"

TEES

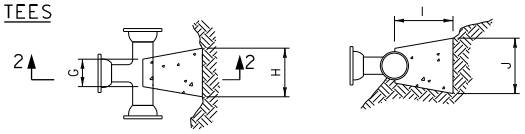

PLAN

SECTION 2-2

CONCRETE THRUST BLOCK

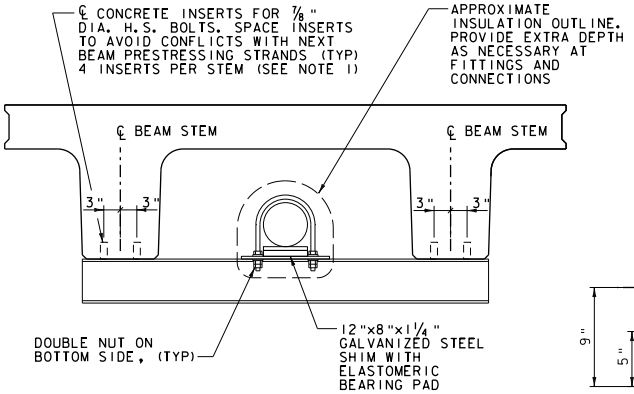

SECTION VIEW

BRACED CONNECTION DETAIL

SCALE 1" = 1'-0"

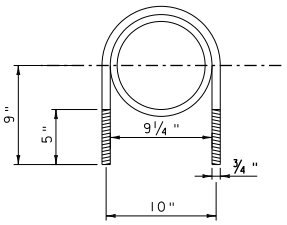

ANVIL 137S, OR EQUAL

STAINLESS STEEL

NOT TO SCALE

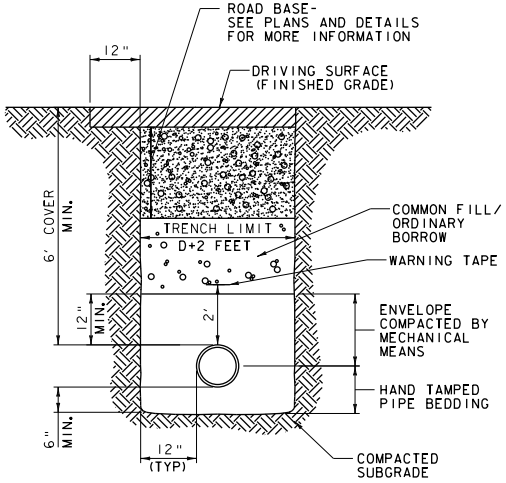

WATER TRENCH DETAIL

NOT TO SCALE

NOTES:

1. ALL COSTS FOR THREADED INSERTS INCLUDED IN ITEM 900.640 "SPECIAL PROVISION (PRESTRESSED CONCRETE NEXT D BEAMS) (NEXT 28D)"
2. PROVIDE BLOCKS FOR ALL BURIED TAPPING SLEEVES, DEAD ENDS, GATE VALVES, HORIZONTAL BENDS, AND VERTICAL BENDS (SAME SIZE AS REQUIRED FOR TEES). PROVIDE ANCHOR RODS AT VERTICAL BENDS AND GATE VALVES.
3. CONCRETE SHALL NOT BE PLACED AGAINST PIPE BEYOND FITTING.
4. CONCRETE SHALL BE CONCRETE CLASS C, 3000 PSI.

VHB Vanasse Hangen Brustlin, Inc.

PROJECT NAME: MIDDLEBURY	
PROJECT NUMBER: RS 0174(8)	
FILE NAME: z78f217_wtr.dgn	PLOT DATE: 8/27/2013
PROJECT LEADER: M.A. COLGAN	DRAWN BY: B.J. MASSE
DESIGNED BY: T. GINGRAS	CHECKED BY: M.J. LEO
WATERLINE DETAILS (2 OF 2)	SHEET 33 OF 104

VHB 57438

SUPPLEMENTAL INFORMATION

Macro Coupling(s)
MJ Pipe
Fittings
Insulation
Gate Valve
Valve Box
Curb & Corp
Casing Spacers
End Seals
Roller(s)
Pipe covering protection saddles
Threaded Rod
Stainless steel nuts
Structural Steel with bearing plates

ROMAC INDUSTRIES, INC.

MACRO HP 4” – 12”
EXTENDED RANGE COUPLING

SUBMITTAL INFORMATION

Use:	Provides an Extended Range Coupling for multi-purpose use from steel pipe up through class 200 asbestos cement pipe. Each end requires only one bolt to compress the gasket around the pipe. The MACRO HP can accommodate up to 10 degrees of deflection.
AWWA C219	The MACRO HP coupling is in accordance with the requirements of AWWA Standard C219.
MATERIALS	
Castings	All cast components (end rings, center ring, and bolt cams) are ductile iron, meeting or exceeding the requirements of ASTM A 536, grade 65-45-12.
End Rings:	End rings are segmented and joined with a pinless hinge. The gap is spanned by the armor.
Center Rings:	Cast with integral handle for ease of assembly.
Gaskets	Gaskets formed from virgin Nitrile Butadiene Rubber (NBR) compounded for water and sewer service in accordance with ASTM D2000. NSF 61 Certified rubber and other compounds available on request.
Armor	Heavy gauge 304 stainless steel.
Bolts and Nuts	5/8-11 UNC carriage head bolts with heavy hex nuts, 304 stainless steel. Fasteners provided with anti-galling protection. 316 stainless available on request.
Coatings	Center ring fusion bonded epoxy in accordance with AWWA C213 and NSF 61 Certified. End rings E-Coated epoxy.
PRESSURE	When properly installed on a pipe that is within the outside diameter range of the Romac MACRO HP coupling, the 4”-8” can be used at a working pressures up to 305 psi and the 10” and 12” up to 260 psi.
SIZES AND RANGES	See Catalog.

Romac Document Number 20-1-0048 6/12

This information is based on the best data available at the date printed above, please check with Romac Engineering Department for any updates or changes.

2011 EDITION

4"-12"

MECHANICAL JOINT PIPE

DUCTILE IRON

NSF® Certified to ANSI/NSF 61

FOR WATER & WASTEWATER, FIRE PROTECTION & INDUSTRIAL APPLICATIONS

MORE THAN JUST PIPE.

U.S. PIPE

866.DIP.PIPE

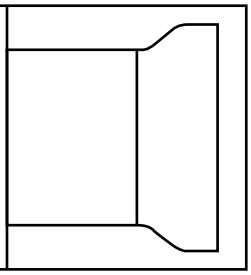

MECHANICAL JOINT PIPE

NSF Certified to ANSI/NSF 61

2011 EDITION

P 2

Table of Contents

Mechanical Joint Pipe	3
Assembly of Mechanical Joint Pipe	4
Technical Information	5

MECHANICAL JOINT PIPE

Mechanical Joint Pipe

Mechanical joint pipe is a time-tested Ductile Iron product with joint dimensions conforming to the standardized dimensions in AWWA C111. Mechanical joint pipe is UL Listed and FM Approved.

The mechanical joint is based on the stuffing box principle and consists of a bell with a flange cast integrally with it; a cast or ductile iron gland; a rubber gasket and the necessary bolts and nuts. Its design permits considerable deflection as well as longitudinal expansion and contraction in the line.

Gaskets, Glands and Bolts for Mechanical Joint Pipe and Fittings

All gaskets furnished for mechanical joints are made to accurate dimensions under rigid controls and inspection. Plain tipped rubber gaskets are normally furnished; however, gaskets for special applications can be furnished upon request.

Glands are made of special high quality gray or ductile iron under rigid metallurgical controls and inspections.

Alloy bolts normally furnished for the mechanical joint are low alloy, high strength steel bolts having a minimum yield strength of 45,000 psi. In this use these bolts are cathodic to the pipe, which minimizes any corrosive tendencies. Other types of bolts and bolts for unusual requirements are furnished to meet purchasers' specifications.

Gaskets, glands and bolts are furnished in sufficient quantities to provide for each socket opening on pipe and fittings.

ANSI / AWWA Standards

ANSI/AWWA C151/A21.51, Standard for Ductile Iron Pipe, Centrifugally Cast for Water.

Ductile Iron mechanical joint pipe are centrifugally cast in metal molds in sizes 4" through 12" in accordance with applicable requirements of ANSI/AWWA C151/A21.51.

ANSI/AWWA C111/A21.11, Standard for Rubber-Gasket Joints for Ductile Iron Pressure Pipe and Fittings.

Accessories conform to applicable requirements of ANSI/AWWA C111/A21.11.

NOTE: *U.S. Pipe neither manufactures nor recommends the use of mechanical joint retainer glands. As an accommodation to our customers and consulting engineers we do provide retainer glands for use where specified. Any warranties for those glands sold by U.S. Pipe shall be those warranties given by the particular manufacturer of the gland involved. U.S. PIPE MAKES NO WARRANTIES, EXPRESS OR IMPLIED CONCERNING THOSE GLANDS, AND U.S. PIPE WILL ASSUME NO LIABILITY FOR THEIR USE. We continue to offer other restrained joint products, TR FLEX® Pipe and Fittings, and the FIELD LOK 350® Gasket for use with TYTON JOINT® Pipe and Fittings.*

If specifiers and users believe that corrosive soils will be encountered where our products are to be installed, please refer to ANSI/AWWA C105/A21.5 Polyethylene Encasement for Ductile Iron Pipe Systems for proper protection procedures.

MECHANICAL JOINT PIPE

Assembly of Mechanical Joint Pipe

These photographs show each of the five progressive steps in assembling mechanical joint pipe.

Figure 1.
Brush socket, plain end and gasket with soapy water, then slip gland and gasket over plain end. The small side of the gasket and the lip side of the gland face the socket.

Figure 2.
Insert plain end into socket. Push gasket into position with fingers, making sure it is evenly seated.

Figure 3.
Slide gland into position, insert bolts and tighten nuts by hand.

Figure 4.
With ordinary ratchet wrench, tighten bolts alternatively (bottom then top, and so on, all around) to a torque range of 75-90 ft-lb.

Figure 5.
The completed mechanical joint.

NOTE: *Installation of mechanical joint pipe should be made following the instructions in ANSI/AWWA C600 and ANSI/AWWA C111/A21.11.*

1.

2.

3.

4.

5.
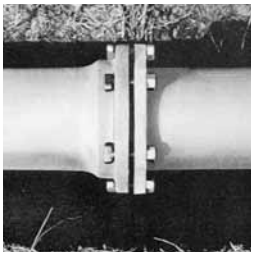

MECHANICAL JOINT PIPE

Technical Information

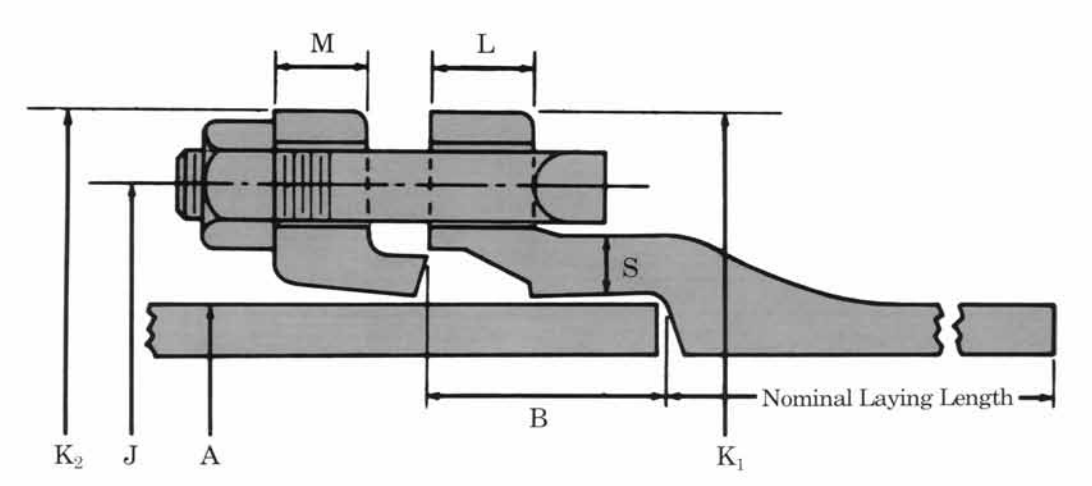

DIMENSIONS
Inches

Table 1. 4"-12" Mechanical Joint Pipe

									BOLTS					
SIZE	**A**	**B**	**J**	**K_1**	**K_2**	**L**	**M**	**S**	**QUANTITY**	**SIZE** Inches	**LENGTH** Inches	**BOLTS BELL** Pounds	**GLAND MAX GASKET** Pounds	**DEFLECTION** Degrees
4	4.80	2.50	7.50	9.06	9.12	.91	.75	.41	4	3/4	3-1/2	13	10	8º
6	6.90	2.50	9.50	11.06	11.12	.94	.88	.43	6	3/4	3-1/2	18	16	7º
8	9.05	2.50	11.75	13.31	13.37	.98	1.00	.45	6	3/4	4	24	25	5º
10	11.10	2.50	14.00	15.62	15.62	.98	1.00	.47	8	3/4	4	31	30	5º
12	13.20	2.50	16.25	17.88	17.88	.98	1.00	.49	8	3/4	4	37	40	5º

NOTE: *Ductile Iron glands are furnished with 4"-12" mechanical joint pipe.*

MECHANICAL JOINT PIPE

Technical Information (cont.)

Table 2. Nominal thicknesses, dimensions and weights of 4”-12” mechanical joint pipe conforming to ANSI/AWWA C151/A21.51.

					WEIGHTS† MJ PIPE	
SIZE Inches	**THICKNESS CLASS**	**THICKNESS** Inches	**OUTSIDE DIAMETER** Inches	**WEIGHT BARREL PER FOOT** Pounds	**PER LENGTH*** Pounds	**AVERAGE WEIGHT PER FOOT**** Pounds
4	50	—	—	—	—	—
6	50	0.25	6.90	16.0	305	16.0
8	50	0.27	9.05	22.8	435	22.8
10	50	0.29	11.10	30.1	575	30.1
12	50	0.31	13.20	38.4	730	38.4
4	51	0.26	4.80	11.3	215	11.3
6	51	0.28	6.90	17.8	340	17.8
8	51	0.30	9.05	25.2	480	25.2
10	51	0.32	11.10	33.2	630	33.2
12	51	0.34	13.20	42.0	795	42.0
4	52	0.29	4.80	12.6	240	12.6
6	52	0.31	6.90	19.6	370	19.6
8	52	0.33	9.05	27.7	520	27.7
10	52	0.35	11.10	36.2	680	36.2
12	52	0.37	13.20	45.6	860	45.6
4	53	0.32	4.80	13.8	260	13.8
6	53	0.34	6.90	21.4	405	21.4
8	53	0.36	9.05	30.1	565	30.1
10	53	0.38	11.10	39.2	735	39.2
12	53	0.40	13.20	49.2	925	49.2
4	54	0.35	4.80	15.0	285	15.0
6	54	0.37	6.90	23.2	435	23.2
8	54	0.39	9.05	32.5	610	32.5
10	54	0.41	11.10	42.1	790	42.1
12	54	0.43	13.20	52.8	990	52.8

Tolerances of OD of Spigot End: 4”-12” ± .06”

†4”-12” - Nominal 18’ laying lengths.

**Including bell calculated weight of pipe rounded off to nearest 5 lbs.*

***Including bell average weight of pipe per foot, based on calculated weight of pipe before rounding.*

MECHANICAL JOINT PIPE

Technical Information (cont.)

Table 2. Nominal thicknesses, dimensions and weights of 4”-12” mechanical joint pipe conforming to ANSI/AWWA C151/A21.51.

SIZE Inches	THICKNESS CLASS	THICKNESS Inches	OUTSIDE DIAMETER Inches	WEIGHT BARREL PER FOOT Pounds	WEIGHTS† MJ PIPE PER LENGTH* Pounds	WEIGHTS† MJ PIPE AVERAGE WEIGHT PER FOOT** Pounds
4	55	0.38	4.80	16.1	305	16.1
6	55	0.40	6.90	25.0	470	25.0
8	55	0.42	9.05	34.8	650	34.8
10	55	0.44	11.10	45.1	845	45.1
12	55	0.46	13.20	56.3	1050	56.3
4	56	0.41	4.80	17.3	325	17.3
6	56	0.43	6.90	26.7	500	26.7
8	56	0.45	9.05	37.2	695	37.2
10	56	0.47	11.10	48.0	895	48.0
12	56	0.49	13.20	59.9	1115	59.9

Tolerances of OD of Spigot End: 4”-12” ± .06”

†4”-12” - Nominal 18’ laying lengths.

**Including bell calculated weight of pipe rounded off to nearest 5 lbs.*

***Including bell average weight of pipe per foot, based on calculated weight of pipe before rounding.*

MECHANICAL JOINT PIPE

Products for Water, Wastewater and Fire Protection

Ductile Iron Pipe	SIZE RANGE
TYTON JOINT® Pipe	4"-64" Ductile Iron
Mechanical Joint Pipe	4"-12" Ductile Iron
TR FLEX® Pipe	4"-64" Ductile Iron
Flanged Pipe	3"-64" Ductile Iron
USIFLEX® Boltless Flexible Joint Pipe — for Subaqueous Installations	4"-48" Ductile Iron
Restrained Joints	
TR FLEX® Pipe	4"-64" Ductile Iron
MJ FIELD LOK® Gaskets	4"-24"
FIELD LOK 350® Gaskets	4"-24"
FIELD LOK® Gasket	30" & 36"
TR FLEX GRIPPER® Rings	4"-36" Ductile Iron
TR TELE FLEX® Assemblies	4"-24" Ductile Iron
HP LOK™ Restrained Joint	30"-42"
Ductile Iron Fittings	
TYTON® Fittings	14"-64" Ductile Iron
TRIM TYTON® Fittings	4"-12" Ductile Iron
TR FLEX® Fittings and TR FLEX® Telescoping Sleeves	4"-64" Ductile Iron
Mechanical Joint Fittings	3"-48" Ductile Iron
TRIM TYTE® MJ Fittings	3"-48" Ductile Iron
Flanged Fittings	3"-64" Ductile Iron
XTRA FLEX® Couplings	4"-24" Ductile Iron
Miscellaneous Products	
PROTECTO 401™ Lined Ductile Iron Pipe for Domestic Sewage and Industrial Wastes	4"-64" Ductile Iron
FLANGE-TYTE® Gaskets	4"-64"
Polymeric Linings	For all pipe sizes
Saddle Outlets	Various Ductile Iron
Welded Outlets	Various Ductile Iron
Polyethylene Encasement	4"-64"

Our products are manufactured in conformance with National Standards so that our customers may be assured of getting the performance and longevity they expect. Use of accessories or other appurtenances that do not comply with recognized standards may jeopardize the performance and longevity of the project.

All U.S. Pipe brochures and/or products are subject to change without further notice.

P.O. BOX 10406
BIRMINGHAM, AL 35202
866.DIP.PIPE (866.347.7473)
FAX: 205.254.7165
EMAIL: INFO@USPIPE.COM
WWW.USPIPE.COM

MORE THAN JUST PIPE.

U.S. PIPE

SIGMA

COMPACT MJ

C153 Mechanical Joint Ductile Iron Fittings

©2007 Sigma Corporation, All Rights Reserved

SIGMA

Weights in Pounds, Less Accessories / Dimensions in inches
Ductile Iron Class 350 per ANSI/AWWA C153/A21.53

C153 Mechanical Joint Compact Fittings

3-48” Ductile Iron Mechanical Joint Fittings Class 350

MATERIAL: Ductile Iron ASTM A536

PRESSURE: 350PSI WATER WORKING PRESSURE (CLASS 350) 3” - 24”: & 250 PSI 30” - 48”

TESTING: In accordance with ANSI / AWWA C153 / A21.53 & UL - FM requirements

LAYING LENGTH:Short body design - straight section of body deleted to provide a compact and lighter fitting without reducing strength or flow characterisitics, in accordance with ANSI / AWWA C153 / A21.53

CEMENT LINING: In accordance with ANSI / AWWA C104 / A21.4 COATING: Tar coated (bituminous) inside and out in accordance with ANSI / AWWA C104 / A21.4

GASKETS: SBR in accordance with ANSI / AWWA C111 / A21.11

T-BOLTS: Low Alloy corrosion resistant high strength steel in accordance with ANSI / AWWA C111 / A21.11

APPROVALS: 3”-16” Underwriters Laboratories listed and Factory Mutual Approved.

STANDARDS: Certified to NSF61 Standard ANSI / AWWA C153 / A21.53 for Compact Ductile Iron Fittings 3”-48” for water and other liquids.

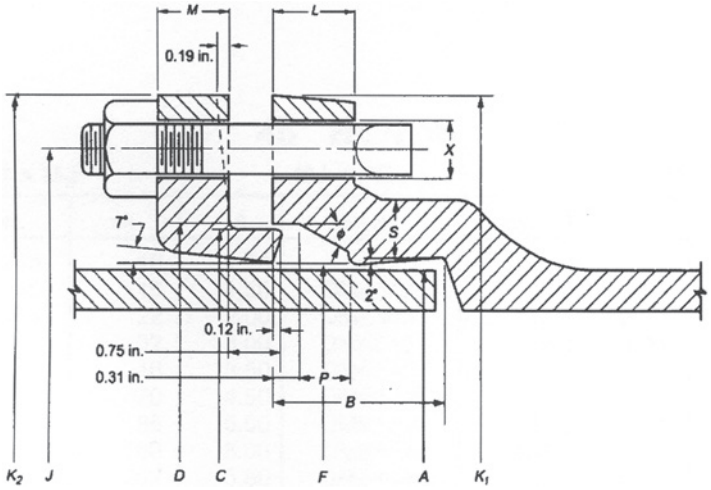

Mechanical Joint Detail

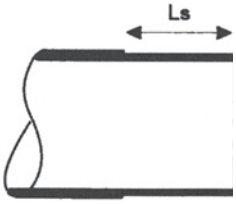

Plain End Detail

Size	A	B	C	D	F	J	K1	K2	L	M	P	S	X	Bolts			
														No	Size	Len	L_S
3	3.96	2.50	4.84	4.94	4.06	6.19	7.62	7.69	0.58	0.62	0.63	0.39	3/4	4	5/8	3.0	5.5
4	4.80	2.50	5.92	6.02	4.90	7.50	9.06	9.12	0.60	0.75	0.75	0.39	7/8	4	3/4	3.5	5.5
6	6.90	2.50	8.02	8.12	7.00	9.50	11.06	11.12	0.63	0.88	0.75	0.43	7/8	6	3/4	3.5	5.5
8	9.05	2.50	10.17	10.27	9.15	11.75	13.31	13.37	0.66	1.00	0.75	0.45	7/8	6	3/4	3.5	5.5
10	11.10	2.50	12.22	12.34	11.20	14.00	15.62	15.62	0.70	1.00	0.75	0.47	7/8	8	3/4	3.5	5.5
12	13.20	2.50	14.32	14.44	13.30	16.25	17.88	17.88	0.73	1.00	0.75	0.49	7/8	8	3/4	3.5	5.5
14	15.30	3.50	16.40	16.54	15.44	18.75	20.25	20.25	0.79	1.25	0.75	0.55	7/8	10	3/4	4.0	8.0
16	17.40	3.50	18.50	18.64	17.54	21.00	22.50	22.50	0.85	1.31	0.75	0.58	7/8	12	3/4	4.0	8.0
18	19.50	3.50	20.60	20.74	19.64	23.25	24.83	24.75	1.00	1.38	0.75	0.68	7/8	12	3/4	4.0	8.0
20	21.60	3.50	22.70	22.84	21.74	25.50	27.08	27.00	1.02	1.44	0.75	0.69	7/8	14	3/4	4.0	8.0
24	25.80	3.50	26.90	27.04	25.94	30.00	31.58	31.50	1.02	1.56	0.75	0.75	7/8	16	3/4	4.5	8.0
30	32.00	4.00	33.29	33.46	32.17	36.88	39.12	39.12	1.31	2.00	1.00	0.82	1 1/8	20	1	5.5	8.0
36	38.30	4.00	39.59	39.76	38.47	43.75	46.00	46.00	1.45	2.00	1.00	1.00	1 1/8	24	1	5.5	8.0
42	44.50	4.00	45.79	45.96	44.67	50.62	53.12	53.12	1.45	2.00	1.00	1.25	1 3/8	28	1 1/4	6.0	8.0
48	50.80	4.00	52.09	52.26	50.97	57.50	60.00	60.00	1.45	2.00	1.00	1.35	1 3/8	32	1 1/4	6.0	8.0

©2007 Sigma Corporation, All Rights Reserved

Weights in Pounds, Less Accessories / Dimensions in inches
Ductile Iron Class 350 per ANSI/AWWA C153/A21.53

SIGMA

C153 Mechanical Joint Compact Fittings

90 Degree Bends

MJ x MJ				MJ x PE				
Size	Item No.	Wt.	A	Item No.	Wt.	A	B	t
2	DMB290	17	3.00					0.30
3	DMB390	19	3.50	DME390	16	3.25	8.50	0.33
4	DMB490	25	4.00	DME490	22	4.00	9.50	0.34
6	DMB690	39	5.00	DME690	41	5.00	11.50	0.36
8	DMB890	57	6.50	DME890	58	6.50	12.50	0.38
10	DMB1090	89	7.50	DME1090	88	7.50	13.00	0.40
12	DMB1290	108	9.00	DME1290	114	9.00	14.50	0.42
14	DMB1490	210	11.50	DME1490	211	11.50	19.50	0.47
16	DMB1690	264	12.50	DME1690	248	12.50	20.50	0.50
18	DMB1890	335	14.00	DME1890	325	14.00	21.00	0.54
20	DMB2090	400	15.00	DME2090	390	15.00	22.50	0.57
24	DMB2490	565	16.75	DME2490	575	17.00	25.00	0.61
30	DMB3090	930	21.50	DME3090	865	21.50	30.50	0.66
36	DMB3690	1,450	24.50	DME3690	1,355	24.50	33.50	0.74
42	DMB4290	2,205	29.25	DME4290	2,055	29.25	38.25	0.82
48	DMB4890	2,990	33.25	DME4890	2,805	33.25	42.25	0.90

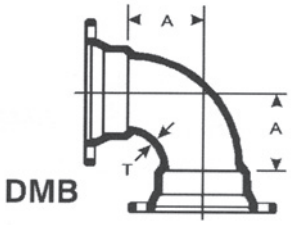

MJ x MJ 90°

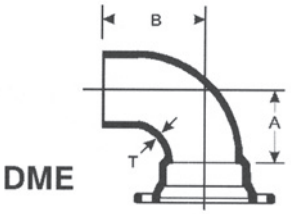

MJ x PE 90°

45 Degree Bends

MJ x MJ				MJ x PE				
Size	Item No.	Wt.	A	Item No.	Wt.	A	B	T
2	DMB245	10	1.50					0.30
3	DMB345	16	1.50	DME345	13	1.50	7.00	0.33
4	DMB445	22	2.00	DME445	19	2.00	7.50	0.34
6	DMB645	32	3.00	DME645	34	3.00	8.50	0.36
8	DMB845	46	3.50	DME845	49	3.50	9.00	0.38
10	DMB1045	70	4.50	DME1045	70	4.50	10.00	0.40
12	DMB1245	86	5.50	DME1245	93	5.50	11.00	0.42
14	DMB1445	160	5.00	DME1445	146	5.00	13.00	0.47
16	DMB1645	202	5.50	DME1645	212	5.50	13.50	0.50
18	DMB1845	250	6.00	DME1845	235	6.00	13.00	0.54
20	DMB2045	305	7.00	DME2045	290	7.00	14.00	0.57
24	DMB2445	405	7.50	DME2445	390	7.50	14.50	0.61
30	DMB3045	780	10.50	DME3045	715	10.50	19.50	0.66
36	DMB3645	1135	11.50	DME3645	1,040	12.00	21.00	0.74
42	DMB4245	1610	14.00	DME4245	1,460	14.00	23.00	0.82
48	DMB4845	2090	15.00	DME4845	1,905	15.00	24.00	0.90

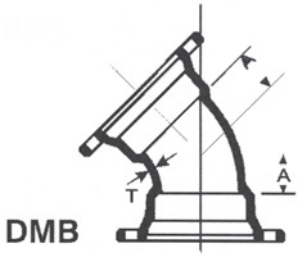

MJ x MJ 45°

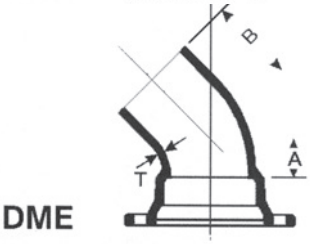

MJ x PE 45°

22-1/2 Degree Bends

MJ x MJ				MJ x PE				
Size	Item No.	Wt.	A	Item No.	Wt.	A	B	T
3	DMB322	15	1.00	DME322	12	1.00	6.50	0.33
4	DMB422	18	1.50	DME422	18	1.50	7.00	0.34
6	DMB622	31	2.00	DME622	29	2.00	7.50	0.36
8	DMB822	46	2.50	DME822	43	2.50	8.00	0.38
10	DMB1022	64	3.00	DME1022	61	3.00	8.50	0.40
12	DMB1222	80	3.50	DME1222	79	3.50	9.00	0.42
14	DMB1422	136	3.75	DME1422	133	3.75	11.25	0.47
16	DMB1622	172	3.75	DME1622	166	3.75	11.75	0.50
18	DMB1822	255	4.50	DME1822	235	6.00	13.00	0.54
20	DMB2022	310	4.50	DME2022	300	7.00	14.00	0.57
24	DMB2422	412	4.50	DME2422	395	7.50	14.50	0.61
30	DMB3022	665	6.75	DME3022	600	6.75	15.75	0.66
36	DMB3622	960	7.75	DME3622	865	7.75	16.75	0.74
42	DMB4222	1350	9.00	DME4222	1,200	9.00	18.00	0.82
48	DMB4822	1760	10.00	DME4822	1,575	10.00	19.00	0.90

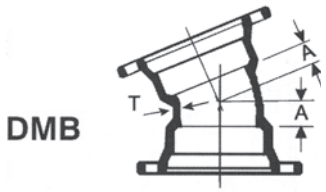

MJ x MJ 22½°

MJ x PE 22½°

©2007 Sigma Corporation, All Rights Reserved

SIGMA

Weights in Pounds, Less Accessories / Dimensions in inches
Ductile Iron Class 350 per ANSI/AWWA C153/A21.53

C153 Mechanical Joint Compact Fittings

11-1/4 Degree Bends

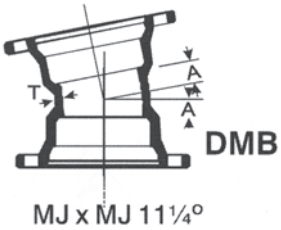

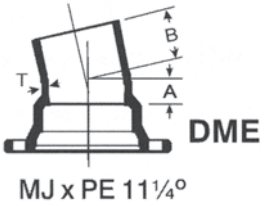

	MJ x MJ			MJ x PE				
Size	Item No.	Wt.	A	Item No.	Wt.	A	B	T
3	DMB311	14	1.00	DME311	12	1.00	6.50	0.33
4	DMB411	16	1.25	DME411	17	1.25	6.25	0.34
6	DMB611	30	1.50	DME611	27	1.50	7.00	0.36
8	DMB811	42	1.75	DME811	39	1.75	7.25	0.38
10	DMB1011	58	2.00	DME1011	52	2.00	7.50	0.40
12	DMB1211	67	2.25	DME1211	69	2.25	7.75	0.42
14	DMB1411	93	2.50	DME1411	118	2.50	10.50	0.47
16	DMB1611	148	2.50	DME1611	136	2.50	10.50	0.50
18	DMB1811	205	3.00	DME1811	235	6.00	13.00	0.54
20	DMB2011	245	3.00	DME2011	300	7.00	14.00	0.57
24	DMB2411	315	3.00	DME2411	400	7.50	14.50	0.61
30	DMB3011	600	4.75	DME3011	535	4.75	13.75	0.66
36	DMB3611	820	5.00	DME3611	725	5.00	14.00	0.74
42	DMB4211	1,180	6.00	DME4211	1,030	6.00	15.00	0.82
48	DMB4811	1,475	6.50	DME4811	1,290	6.50	15.50	0.90

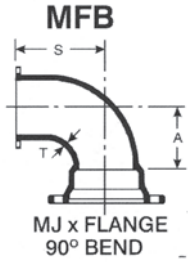

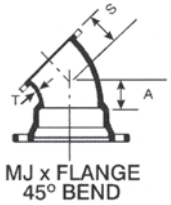

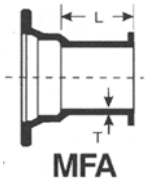

MJ x Flange Bends & Adapters

	90 deg. bends				45 deg. bends				Adapters			
Size	Item No.	A	S	Wt.	Item No.	A	S	Wt.	Item No.	L	Wt.	T
3	MFB390	3.50	5.50	21	MFB345	1.50	3.00	17	MFA3	3.50	18	0.33
4	MFB490	4.00	6.50	28	MFB445	2.00	4.00	34	MFA4	3.50	24	0.34
6	MFB690	5.00	8.00	46	MFB645	3.00	5.00	57	MFA6	3.50	36	0.36
8	MFB890	6.50	9.00	71	MFB845	3.50	5.50	83	MFA8	4.00	52	0.38
10	MFB1090	7.50	11.00	121	MFB1045	4.50	6.50	122	MFA10	4.00	67	0.40
12	MFB1290	9.00	12.00	155	MFB1245	5.50	7.50	159	MFA12	4.00	80	0.42
14									MFA14	5.00	126	0.47
16	MFB1690	12.50	15.00	280	MFB1645	5.50	8.00	290	MFA16	5.00	166	0.50
18									MFA18	5.00	206	0.54
20	MFB2090	15.00	18.00	441	MFB2045	7.00	9.50	338	MFA20	5.00	275	0.57
24	MFB2490	16.75	22.00	618	MFB2445	7.50	11.00	442	MFA24	5.00	324	0.61
30									MFA30	7.00	420	0.66

MJ x Flange 22-1/2 Bends

Size	Item No.	A	S	T	Wt.
3	MFB322	1.00	3.00	0.33	15
4	MFB422	1.50	4.00	0.34	23
6	MFB622	2.00	5.00	0.36	37
8	MFB822	2.50	5.50	0.38	56
10	MFB1022	3.00	6.50	0.40	81
12	MFB1222	3.50	7.50	0.42	114

©2007 Sigma Corporation, All Rights Reserved

Weights in Pounds, Less Accessories / Dimensions in inches
Ductile Iron Class 350 per ANSI/AWWA C153/A21.53

SIGMA

C153 Mechanical Joint Compact Fittings

Crosses

Size		Item No.	H	J	T	T1	Wt.
Run	Branch						
3	3	DMC33	3.00	3.00	0.33	0.33	35
4	3	DMC43	3.50	4.00	0.34	0.33	49
4	4	DMC44	4.00	4.00	0.34	0.34	57
6	4	DMC64	4.00	5.00	0.36	0.34	68
6	6	DMC66	5.00	5.00	0.36	0.36	75
8	4	DMC84	4.00	6.50	0.38	0.34	99
8	6	DMC86	5.00	6.50	0.38	0.36	108
8	8	DMC88	6.00	6.00	0.38	0.38	105
10	3	DMC103	3.00	7.50	0.40	0.33	115
10	4	DMC104	4.00	7.50	0.40	0.34	98
10	6	DMC106	5.00	7.50	0.40	0.36	118
10	8	DMC108	6.50	7.50	0.40	0.38	138
10	10	DMC1010	7.00	7.00	0.40	0.40	145
12	4	DMC124	4.00	8.75	0.42	0.34	100
12	6	DMC126	5.00	8.75	0.42	0.36	140
12	8	DMC128	6.50	8.75	0.42	0.38	162
12	10	DMC1210	7.50	8.75	0.42	0.40	190
12	12	DMC1212	8.50	8.50	0.42	0.42	213
14	8	DMC148	8.00	10.50	0.47	0.38	259
14	14	DMC1414	10.50	10.50	0.47	0.47	299
16	6	DMC166	6.50	11.50	0.50	0.36	250
16	8	DMC168	7.50	11.50	0.50	0.38	289
16	10	DMC1610	8.50	11.50	0.50	0.40	345
16	12	DMC1612	9.50	11.50	0.50	0.42	397
16	16	DMC1616	11.50	11.50	0.50	0.50	385
20	20	DMC2020	14.00	14.00	0.57	0.57	605
24	24	DMC2424	16.00	16.00	0.61	0.61	830
30	30	DMC3030	22.00	22.00	0.66	0.66	1840
36	36	DMC3636	26.00	26.00	0.74	0.74	2655
42	42	DMC4242	30.00	30.00	0.82	0.82	3725
48	48	DMC4848	33.50	33.50	0.90	0.90	4955

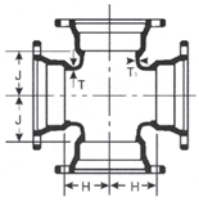

DMC

Tees

SIZE		MJ x MJ						MJ x Flange			
Run	Br.	Item No.	Wt.	H	J	T	T1	Item No.	Wt.	H	L
2	2	DMT22	16	3.00	3.00	0.30	0.30				
3	3	DMT33	28	3.00	3.00	0.33	0.33	DMF33	28	3.00	5.50
4	2	DMT42	29	3.00	4.00	0.34	0.30				
4	3	DMT43	30	3.50	4.00	0.34	0.33				
4	4	DMT44	32	4.00	4.00	0.34	0.34	DMF44	38	4.00	6.50
6	3	DMT63	42	3.50	5.00	0.36	0.33	DMF63	51	3.50	8.00
6	4	DMT64	46	4.00	5.00	0.36	0.34	DMF64	54	4.00	8.00
6	6	DMT66	56	5.00	5.00	0.36	0.36	DMF66	56	5.00	8.00
8	3	DMT83	52	3.50	6.50	0.38	0.33	DMF83	70	4.00	9.00
8	4	DMT84	60	4.00	6.50	0.38	0.34	DMF84	72	4.00	9.00
8	6	DMT86	72	5.00	6.50	0.38	0.36	DMF86	83	5.00	9.00
8	8	DMT88	86	6.50	6.50	0.38	0.38	DMF88	94	6.50	9.00
10	3	DMT103	75	4.00	7.50	0.40	0.33				
10	4	DMT104	78	4.00	7.50	0.40	0.34	DMF104	89	4.00	11.00
10	6	DMT106	90	5.00	7.50	0.40	0.36	DMF106	107	5.00	11.00
10	8	DMT108	105	6.50	7.50	0.40	0.38	DMF108	115	6.50	11.00
10	10	DMT1010	120	7.50	7.50	0.40	0.40	DMF1010	130	7.50	11.00
12	3	DMT123	90	4.00	8.75	0.42	0.33				
12	4	DMT124	94	4.00	8.75	0.42	0.34	DMF124	115	4.00	12.00
12	6	DMT126	110	5.00	8.75	0.42	0.36	DMF126	120	5.00	12.00
12	8	DMT128	125	6.50	8.75	0.42	0.38	DMF128	146	6.50	12.00

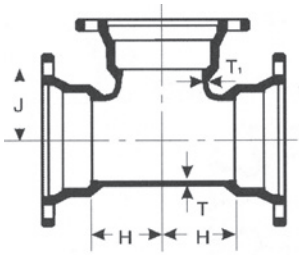

MJ x MJ
DMT

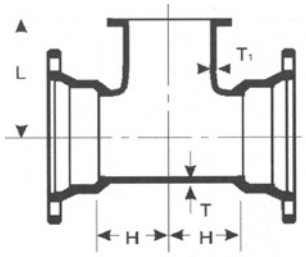

MJ x FLANGE
DMF

©2007 Sigma Corporation, All Rights Reserved

SIGMA

Weights in Pounds, Less Accessories / Dimensions in inches
Ductile Iron Class 350 per ANSI/AWWA C153/A21.53

C153 Mechanical Joint Compact Fittings

Tees (continued)

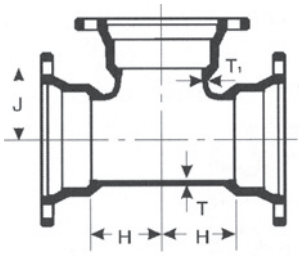

MJ x MJ
DMT

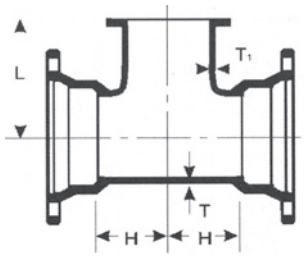

MJ x FLANGE
DMF

SIZE		MJ x MJ						MJ x Flange			
Run	Br.	Item No.	Wt.	H	J	T	T1	Item No.	Wt.	H	L
12	10	DMT1210	140	7.50	8.75	0.42	0.40	DMF1210	174	7.50	12.00
12	12	DMT1212	160	8.75	8.75	0.42	0.42	DMF1212	198	8.75	12.00
14	4	DMT144	172	5.50	10.50	0.47	0.34				
14	6	DMT146	182	6.50	10.50	0.47	0.36				
14	8	DMT148	206	7.50	10.50	0.47	0.38				
14	10	DMT1410	228	8.50	10.50	0.47	0.40				
14	12	DMT1412	234	9.50	10.50	0.47	0.42				
14	14	DMT1414	280	10.50	10.50	0.47	0.47				
16	6	DMT166	228	6.50	11.50	0.50	0.36	DMF166	213	6.50	15.00
16	8	DMT168	248	7.50	11.50	0.50	0.38	DMF168	260	7.50	15.00
16	10	DMT1610	264	8.50	11.50	0.50	0.40	DMF1610	287	8.50	15.00
16	12	DMT1612	280	9.50	11.50	0.50	0.42	DMF1612	312	9.50	15.00
16	14	DMT1614	316	10.50	11.50	0.50	0.47				
16	16	DMT1616	322	11.50	11.50	0.50	0.50				
18	6	DMT186	275	6.50	12.50	0.54	0.36	DMF186	261	6.50	15.50
18	8	DMT188	295	7.50	12.50	0.54	0.38				
18	10	DMT1810	315	8.50	12.50	0.54	0.40				
18	12	DMT1812	335	9.50	12.50	0.54	0.42				
18	14	DMT1814	380	10.50	12.50	0.54	0.47				
18	16	DMT1816	428	11.50	12.50	0.54	0.50				
18	18	DMT1818	448	12.50	12.50	0.54	0.54				
20	6	DMT206	348	6.50	14.00	0.57	0.36	DMF206	345	6.50	17.00
20	8	DMT208	345	8.00	14.00	0.57	0.38	DMF208	384	8.00	17.00
20	10	DMT2010	370	9.00	14.00	0.57	0.40				
20	12	DMT2012	441	10.00	14.00	0.57	0.42				
20	14	DMT2014	440	11.00	14.00	0.57	0.47				
20	16	DMT2016	465	12.00	14.00	0.57	0.50				
20	18	DMT2018	505	13.00	14.00	0.57	0.54				
20	20	DMT2020	535	14.00	14.00	0.57	0.57				
24	6	DMT246	415	7.00	16.00	0.61	0.36	DMF246	460	7.00	19.00
24	8	DMT248	445	8.00	16.00	0.61	0.38	DMF248	418	8.00	19.00
24	10	DMT2410	470	9.00	16.00	0.61	0.40				
24	12	DMT2412	500	10.00	16.00	0.61	0.42				
24	14	DMT2414	550	11.00	16.00	0.61	0.47				
24	16	DMT2416	580	12.00	16.00	0.61	0.50				
24	18	DMT2418	630	13.00	16.00	0.61	0.54				
24	20	DMT2420	660	14.00	16.00	0.61	0.57				
24	24	DMT2424	720	16.00	16.00	0.61	0.61				
30	6	DMT306	700	7.00	20.00	0.66	0.36				
30	8	DMT308	739	8.50	20.00	0.66	0.38				
30	12	DMT3012	830	10.00	20.00	0.66	0.42				
30	16	DMT3016	959	12.50	20.00	0.66	0.50				
30	20	DMT3020	995	15.00	20.00	0.66	0.57				
30	24	DMT3024	1060	16.00	20.00	0.66	0.61				
30	30	DMT3030	1323	20.00	20.00	0.66	0.66				
36	12	DMT3612	1205	10.00	23.50	0.74	0.43				
36	16	DMT3616	1350	12.50	23.50	0.74	0.52				
36	24	DMT3624	1498	16.00	23.50	0.74	0.61				
36	30	DMT3630	1767	20.00	23.50	0.74	0.66				
36	36	DMT3636	1900	23.50	23.50	0.74	0.74				
42	12	DMT4212	1410	10.00	29.50	0.82	0.43				
42	24	DMT4224	2270	20.00	27.50	0.82	0.61				
42	30	DMT4230	2425	22.00	29.50	0.82	0.66				
42	36	DMT4236	3000	30.00	30.00	0.82	0.74				
42	42	DMT4242	3175	30.00	30.00	0.82	0.82				
48	24	DMT4824	2870	23.00	32.00	0.90	0.61				
48	30	DMT4830	3050	23.00	32.00	0.90	0.66				
48	36	DMT4836	3900	33.50	32.25	0.90	0.74				
48	42	DMT4842	4100	33.50	33.50	0.90	0.82				
48	48	DMT4848	4250	33.50	33.50	0.90	0.90				

©2007 Sigma Corporation, All Rights Reserved

Weights in Pounds, Less Accessories / Dimensions in inches
Ductile Iron Class 350 per ANSI/AWWA C153/A21.53

SIGMA

C153 Mechanical Joint Compact Fittings

Tapped Tees and Crosses

Size	TEE		CROSS		T	L	Tap Size
	Item No.	Wt.	Item No.	Wt.			
3	DTT3	35	DTC3	19	0.33	6.0	2
4	DTT4	45	DTC4	23	0.34	8.0	2
6	DTT6	70	DTC6	37	0.36	10.0	2
8	DTT8	95	DTC8	53	0.38	13.0	2
10	DTT10	130	DTC10	68	0.40	14.0	2
12	DTT12	165	DTC12	88	0.42	17.5	2
16	DTT16	178	DTC16	178	0.50	23.0	2
20	DTT20	259	DTC20	259	0.57	28.0	2
24	DTT24	320	DTC24	320	0.61	32.0	2

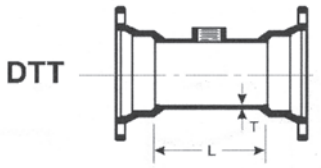

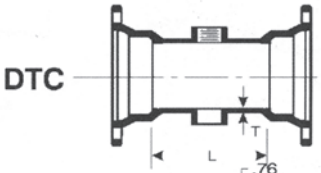

Caps and Plugs

Size	CAP SOLID	CAP TAPPED	Wt.	PLUG SOLID	PLUG TAPPED	Wt.
	Item No.	Item No.		Item No.	Item No.	
3	DMK3	DTK3	8	DMP3	DTP3	8
4	DMK4	DTK4	9	DMP4	DTP4	10
6	DMK6	DTK6	15	DMP6	DTP6	16
8	DMK8	DTK8	22	DMP8	DTP8	26
10	DMKI0	DTK10	32	DMP10	DTP10	36
12	DMK12	DTK12	42	DMP12	DTP12	46
14	DMK14	DTK14	66	DMP14	DTP14	75
16	DMK16	DTK16	92	DMP16	DTP16	95
18	DMK18	DTK18	114	DMP18	DTP18	121
20	DMK20	DTK20	125	DMP20	DTP20	135
24	DMK24	DTK24	166	DMP24	DTP24	175
30	DMK30	DTK30	345	DMP30	DTP30	355
36	DMK36	DTK36	628	DMP36	DTP36	688

DMK

DTK

DMP

DTP

Push In Plugs

Size	SOLID PLUG	TAPPED PLUG	Wt.	T
	Item No.	Item No.		
4	DPP4	PTP4	12	0.43
6	DPP6	PTP6	20	0.47
8	DPP8	PTP8	27	0.49
10	DPP10	PTP10	36	0.52
12	DPP12	PTP12	47	0.54
16	DPP16	PTP16	59	0.60

DPP

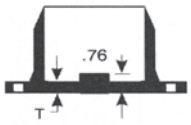

PTP

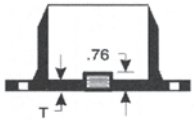

Wyes (45 degree laterals)

Size		Item No.	X	Y	T	T1	Wt.
Run	Branch						
3	3	DMY33	2.0	8.5	.34	.34	36
4	4	DMY44	2.5	9.5	.35	.35	45
6	4	DMY64	1.5	11.0	.37	.35	67
6	6	DMY66	3.0	13.0	.37	.37	93
8	4	DMY84	0.5	13.0	.39	.35	93
8	6	DMY86	2.0	14.5	.39	.37	113
8	8	DMY88	3.5	16.0	.39	.39	136
10	4	DMY104	0.0	15.0	.41	.35	118
10	6	DMY106	1.0	16.0	.41	.37	136
10	8	DMY108	2.5	17.0	.41	.39	170
10	10	DMY1010	3.5	19.0	.41	.41	199
12	4	DMY124	0.0	16.5	.43	.35	150
12	6	DMY126	1.5	18.5	.43	.37	186
12	8	DMY128	1.5	18.5	.43	.39	188
12	10	DMY1210	3.0	20.0	.43	.41	223
12	12	DMY1212	4.5	22.5	.43	.43	272

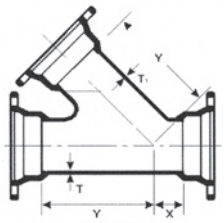

DMY

©2007 Sigma Corporation, All Rights Reserved

SIGMA

Weights in Pounds, Less Accessories / Dimensions in inches
Ductile Iron Class 350 per ANSI/AWWA C153/A21.53

C153 Mechanical Joint Compact Fittings

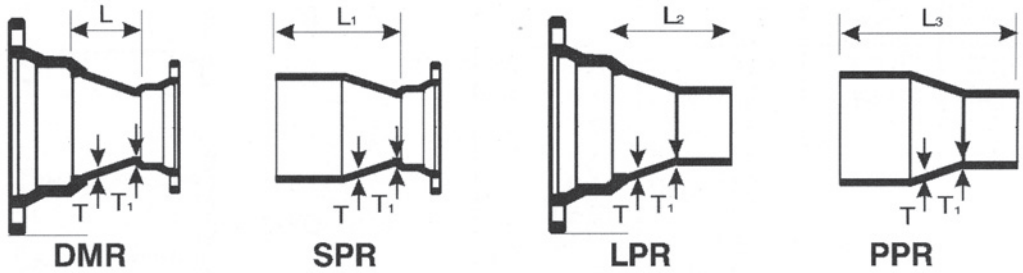

Reducers

Size	Item No.	Wt.	L	Item No.	Wt.	L1	Item No.	Wt.	L2	Item No.	Wt.	L3	T	T1
4 x 2	DMR42	16	2.50	SPR42	14	8.00							0.34	0.30
4 x 3	DMR43	18	3.00	SPR43	17	8.50	LPR43	18	8.50	PPR43	14	14.00	0.34	0.33
6 x 3	DMR63	22	5.00	SPR63	24	10.50	LPR63	19	10.50	PPR63	19	16.00	0.36	0.33
6 x 4	DMR64	24	4.00	SPR64	25	9.50	LPR64	25	9.50	PPR64	22	15.00	0.36	0.34
8 x 4	DMR84	32	5.00	SPR84	30	10.50	LPR84	34	10.50	PPR84	30	16.00	0.38	0.34
8 x 6	DMR86	36	4.00	SPR86	35	9.50	LPR86	32	9.50	PPR86	30	15.00	0.38	0.36
10 x 4	DMR104	46	7.00	SPR104	43	12.50	LPR104	43	12.50	PPR104	46	18.00	0.40	0.34
10 x 6	DMR106	47	5.00	SPR106	46	10.50	LPR106	42	10.50	PPR106	46	16.00	0.40	0.36
10 x 8	DMR108	50	4.00	SPR108	42	9.50	LPR108	50	9.50	PPR108	49	15.00	0.40	0.38
12 x 4	DMR124	58	9.00	SPR124	60	14.50	LPR124	60	14.50	PPR124	58	20.00	0.42	0.34
12 x 6	DMR126	58	7.00	SPR126	58	12.50	LPR126	58	12.50	PPR126	58	18.00	0.42	0.36
12 x 8	DMR128	57	5.00	SPR128	54	10.50	LPR128	55	10.50	PPR128	59	16.00	0.42	0.38
12 x10	DMR1210	61	4.00	SPR1210	59	9.50	LPR1210	59	9.50	PPR1210	59	15.00	0.42	0.40
14 x 6	DMR146	100	9.00	SPR146	100	16.90	LPR146	104	14.50	PPR146	93	22.30	0.47	0.36
14 x 8	DMR148	100	7.00	SPR148	98	14.90	LPR148	98	12.40	PPR148	94	20.30	0.47	0.38
14 x 10	DMR1410	100	5.00	SPR1410	94	12.90	LPR1410	92	10.40	PPR1410	90	18.30	0.47	0.40
14 x 12	DMR1412	100	4.00	SPR1412	90	11.90	LPR1412	92	9.40	PPR1412	88	17.30	0.47	0.42
16 x 6	DMR166	124	11.00	SPR166	125	18.90	LPR166	136	16.50	PPR166	93	24.30	0.50	0.36
16 x 8	DMR168	124	9.00	SPR168	121	16.90	LPR168	128	14.40	PPR168	121	22.30	0.50	0.38
16 x 10	DMR1610	124	7.00	SPR1610	105	15.00	LPR1610	123	12.50	PPR1610	119	20.50	0.50	0.40
16 x 12	DMR1612	112	5.00	SPR1612	109	12.90	LPR1612	108	10.50	PPR1612	99	18.30	0.50	0.42
16 x 14	DMR1614	140	4.00	SPR1614	126	12.00	LPR1614	132	12.00	PPR1614	129	19.70	0.50	0.47
18 x 6	DMR186	194	16.00										0.54	0.36
18 x 8	DMR188	190	13.00	SPR188	170	20.00	LPR188	195	19.50	PPR188	170	27.40	0.54	0.38
18 x 10	DMR1810	195	10.00	SPR1810	165	18.00	LPR1810	185	17.40	PPR1810	160	25.50	0.54	0.40
18 x 12	DMR1812	180	7.00	SPR1812	150	15.50	LPR1812	175	14.00	PPR1812	150	19.50	0.54	0.42
18 x 14	DMR1814	190	6.00	5PR1814	175	15.00	LPR1814	190	15.00	PPR1814	160	23.00	0.54	0.47
18 x 16	DMR1816	193	5.00	SPR1816	170	12.50	LPR1816	190	12.50	PPR1816	145	18.00	0.54	0.50
20 x 6	DMR206	232	22.00	SPR206	201	30.00	LPR206	231	27.50	PPR206	106	35.50	0.57	0.36
20 x 8	DMR208	227	19.00	SPR208	198	27.00	LPR208	227	24.50	PPR208	106	32.50	0.57	0.38
20 x 10	DMR2010	230	14.00	SPR2010	200	22.00	LPR2010	210	19.00	PPR2010	180	27.50	0.57	0.40
20 x 12	DMR2012	205	12.00	SPR2012	170	17.50	LPR2012	205	16.00	PPR2012	190	21.50	0.57	0.42
20 x 14	DMR2014	200	10.00	SPR2014	190	18.00	LPR2014	205	17.90	PPR2014	195	26.00	0.57	0.47
20 x 16	DMR2016	200	7.00	SPR2016	185	13.50	LPR2016	200	13.50	PPR2016	170	19.00	0.57	0.50
20 x 18	DMR2018	225	4.00	SPR2018	200	12.00	LPR2018	225	12.00	PPR2018	190	20.00	0.57	0.54
24 x 6	DMR246	322	28.00	SPR246	284	36.00	LPR246	320	33.50	PPR246	283	41.50	0.61	0.36
24 x 8	DMR248	318	25.00	SPR248	282	33.00	LPR248	316	30.50	PPR248	281	38.50	0.61	0.38
24 x 10	DMR2410	312	22.00	SPR2410	276	30.00	LPR2410	310	27.50	PPR2410	274	35.50	0.61	0.40
24 x 12	DMR2412	305	16.00	SPR2412	275	21.50	LPR2412	290	21.00	PPR2412	240	22.50	0.61	0.42
24 x 14	DMR2414	310	14.00	SPR2414	310	22.00	LPR2414	315	21.90	PPR2414	295	25.00	0.61	0.47
24 x 16	DMR2416	320	12.00	SPR2416	285	17.50	LPR2416	285	17.50	PPR2416	285	23.00	0.61	0.50
24 x 18	DMR2418	308	10.00	SPR2418	300	18.00	LPR2418	310	18.00	PPR2418	290	21.00	0.61	0.54
24 x 20	DMR2420	300	7.00	SPR2420	270	13.50	LPR2420	275	13.50	PPR2420	240	14.00	0.61	0.57
30 x 16	DMR3016	633	30.00	SPR3016	565	39.00	LPR3016	623	39.00	PPR3016	555	48.00	0.66	0.50
30 x 18	DMR3018	658	28.00	SPR3018	590	37.00	LPR3018	635	37.00	PPR3018	567	46.00	0.66	0.54
30 x 20	DMR3020	628	24.00	SPR3020	560	33.00	LPR3020	603	33.00	PPR3020	535	42.00	0.60	0.57
30 x 24	DMR3024	478	10.00	SPR3024	495	24.50	LPR3024	526	24.50	PPR3024	458	33.50	0.66	0.61
36 x 20	DMR3620	975	36.00	SPR3620	874	45.00	LPR3620	950	45.00	PPR3620	849	54.00	0.74	0.57
36 x 24	DMR3624	770	19.00	SPR3624	746	33.00	LPR3624	810	33.00	PPR3624	709	42.00	0.74	0.61
36 x 30	DMR3630	650	15.50	SPR3630	725	24.50	LPR3630	758	24.50	PPR3630	657	33.50	0.74	0.66
42 x 24	DMR4224	1356	40.00	SPR4224	1204	49.00	LPR4224	1319	49.00	PPR4224	1167	58.00	0.82	0.61
42 x 30	DMR4230	1083	20.00	SPR4230	931	29.00	LPR4230	1015	29.00	PPR4230	863	38.00	0.82	0.66
42 x 36	DMR4236	1114	15.50	SPR4236	962	24.50	LPR4236	1013	24.50	PPR4236	861	33.50	0.82	0.74
48 x 30	DMR4830	1779	40.00	SPR4830	1594	49.00	LPR4830	1711	49.00	PPR4830	1526	58.00	0.90	0.66
48 x 36	DMR4836	1641	28.00	SPR4836	1456	37.00	LPR4836	1540	37.00	PPR4836	1355	46.00	0.90	0.74
48 x 42	DMR4842	1426	15.50	SPR4842	1241	24.50	LPR4842	1274	24.50	PPR4842	1089	33.50	0.90	0.82

©2007 Sigma Corporation, All Rights Reserved

Weights in Pounds, Less Accessories / Dimensions in inches
Ductile Iron Class 350 per ANSI/AWWA C153/A21.53

SIGMA

C153 Mechanical Joint Compact Fittings

Tees: MJ x Swivel (Hydrant Tees)

Size	Item No.	H	S	T	T1	Wt
6 x 6	DMH66	5.00	10.00	0.36	0.36	77
8 x 6	DMH86	5.00	11.00	0.38	0.36	89
8 x 8	DMH88	6.50	11.00	0.38	0.38	116
10 x 6	DMH106	5.00	12.50	0.40	0.36	113
10 x 8	DMH108	6.50	12.50	0.40	0.38	129
12 x 6	DMH126	5.00	13.50	0.42	0.36	128
12 x 8	DMH128	6.50	13.50	0.42	0.38	149
14 x 6	DMH146	6.50	15.00	0.47	0.36	211
16 x 6	DMH166	6.50	16.00	0.50	0.36	248
16 x 8	DMH168	7.50	16.00	0.50	0.38	298
18 x 6	DMH186	6.50	17.00	0.54	0.36	300
20 x 6	DMH206	6.50	18.50	0.57	0.36	358
20 x 8	DMH208	8.00	18.50	0.57	0.38	382
24 x 6	DMH246	7.00	19.00	0.61	0.36	458
24 x 8	DMH248	8.00	19.00	0.61	0.38	477

DMH

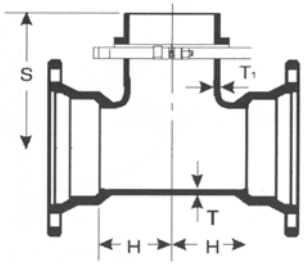

MJ x SWIVEL TEE

Swivel Gland

Size	Item No.	Wt.
4	HR4	8
6	HR6	18
8	HR8	15
10	HR10	18
12	HR12	24

HR

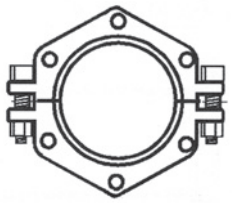

Swivel x Solid 90 Degree Bend

Size	Item No.	A	B	T	Wt.
6	SSB690	10.50	16.00	.36	52
8	SSB890	12.50	18.00	.38	74
10	SSB1090	13.00	20.00	.40	102

SSB

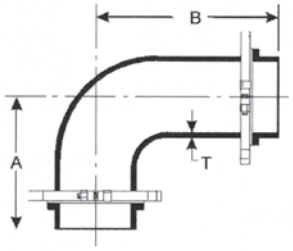

Swivel x Solid Adapter

Size	Item No.	L	T	Wt.
4	SSA413	13.00	0.34	29
6	SSA613	13.00	0.36	47
6	SSA618	18.00	0.36	58
6	SSA624	24.00	0.36	69
6	SSA630	30.00	0.36	66
6	SSA636	36.00	0.36	75
6	SSA648	48.00	0.36	94
6	SSA660	60.00	0.36	112
6	SSA672	72.00	0.36	131
8	SSA813	13.00	0.38	52
10	SSA1013	13.00	0.40	69
12	SSA1213	13.00	0.42	87

SSA

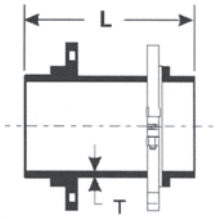

Dual Cutting-In Sleeves

Size	Item No.	Wt.	T	T1	A	L
3	DCL3	34	0.34	0.36	3.96	20
4	DCL4	50	0.35	0.37	4.80	20
6	DCL6	62	0.37	0.39	6.90	20
8	DCL8	90	0.39	0.41	9.05	20
10	DCL10	105	0.41	0.43	11.10	20
12	DCL12	128	0.43	0.45	13.20	20

DCL

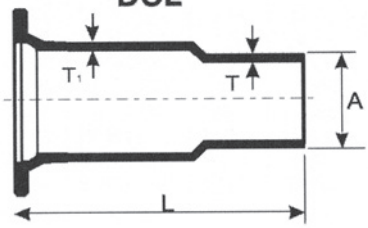

©2007 Sigma Corporation, All Rights Reserved

SIGMA

Weights in Pounds, Less Accessories / Dimensions in inches
Ductile Iron Class 350 per ANSI/AWWA C153/A21.53

C153 Mechanical Joint Compact Fittings

Offsets

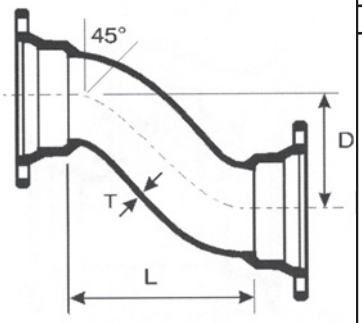

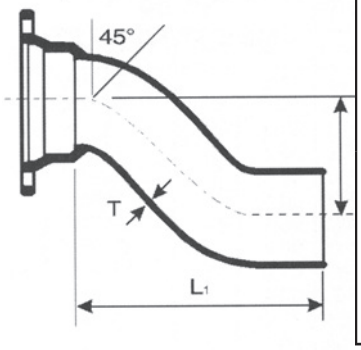

MJ x MJ Size	Item No.	Wt.	D	L	L1	T	MJ x PE Item No.	Wt.
3 x 6	DM036	30	6.00	9.00	14.50	0.33	DMQ36	29
3 x 12	DM0312	40	12.00	15.00	20.50	0.33	DMQ312	39
3 x 18	DM0318	49	18.00	21.00	26.50	0.33	DMQ318	48
3 x 24	DM0324	55	24.00	27.00	32.50	0.33	DMQ324	53
4 x 6	DM046	45	6.00	10.00	15.50	0.34	DMQ46	44
4 x 12	DM0412	55	12.00	16.00	21.50	0.34	DMQ412	54
4 x 18	DM0418	65	18.00	22.00	27.50	0.34	DMQ418	63
4 x 24	DM0424	75	24.00	28.00	33.50	0.34	DMQ424	72
6 x 6	DM066	41	6.00	12.00	17.50	0.36	DMQ66	54
6 x 12	DM0612	65	12.00	18.00	23.50	0.36	DMQ612	64
6 x 18	DM0618	75	18.00	24.00	29.50	0.36	DMQ618	72
6 x 24	DM0624	85	24.00	30.00	35.50	0.36	DMQ624	82
8 x 6	DM086	84	6.00	13.00	18.50	0.38	DMQ86	78
8 x 12	DM0812	90	12.00	19.00	24.50	0.38	DMQ812	88
8 x 18	DM0818	100	18.00	25.00	30.50	0.38	DMQ818	96
10 x 6	DM0106	105	6.00	15.00	20.50	0.40	DMQ106	102
10 x 12	DM01012	135	12.00	21.00	26.50	0.40	DMQ1012	132
10 x 18	DM01018	165	18.00	27.00	32.50	0.40	DMQ1018	160
12 x 6	DM0126	124	6.00	17.00	22.50	0.42	DMQ126	112
12 x 12	DM01212	153	12.00	23.00	28.50	0.42	DMQ1212	146
12 x 18	DM01218	190	18.00	29.00	34.50	0.42	DMQ1218	184
12 x 24	DM01224	202	24.00	35.00	40.50	0.42	DMQ1224	194
12 x 30	DM01230	213	30.00	41.00	46.50	0.42	DMQ1230	205

Sleeves

DML

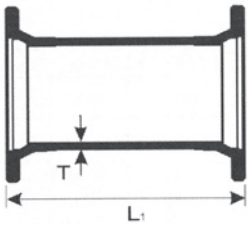

DMS

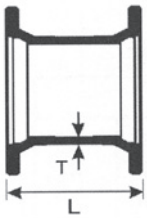

Size	Item No.	Wt.	L	Item No.	Wt.	L1	T
3	DMS3	13	7.50	DML3	18	12.00	0.33
4	DMS4	17	7.50	DML4	20	12.00	0.34
6	DMS6	28	7.50	DML6	33	12.00	0.36
8	DMS8	38	7.50	DML8	46	12.00	0.38
10	DMS10	49	7.50	DML10	62	12.00	0.40
12	DMS12	56	7.50	DML12	76	12.00	0.42
14	DMS14	111	9.50	DML14	140	15.00	0.47
16	DMS16	123	9.50	DML16	170	15.00	0.50
18	DMS18	160	9.00	DML18	200	15.00	0.54
20	DMS20	195	9.00	DML20	255	15.00	0.57
24	DMS24	255	9.00	DML24	335	15.00	0.61
30	DMS30	500	15.00	DML30	640	24.00	0.66
36				DML36	925	24.00	0.74
42				DML42	1150	24.00	0.82
48				DML48	1435	24.00	0.90

Dual Purpose Sleeves

DDL

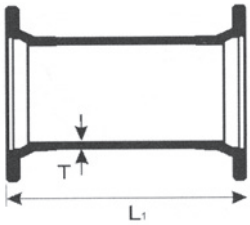

Item No.	L1	T	Wt.
DDL3	23	12	0.33
DDL4	32	12	0.34
DDL6	50	12	0.36
DDL8	65	12	0.38
DDL10	89	12	0.40
DDL12	104	12	0.42

©2007 Sigma Corporation, All Rights Reserved

Weights in Pounds, Less Accessories / Dimensions in inches
Ductile Iron Class 350 per ANSI/AWWA C153/A21.53

SIGMA

C153 Mechanical Joint Compact Fittings

Mechanical Joint Accessories

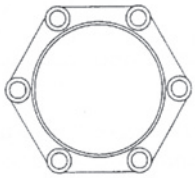

MJ Glands

Size	Item No.	Wt.
2	DG2	2
3	DG3	4
4	DG4	5
6	DG6	6
8	DG8	7
10	DG10	10
12	DG12	15
14	DG14	23
16	DG16	28
18	DG18	30
20	DG20	43
24	DG24	50
30	DG30	85
36	DG36	115
42	DG42	180
48	DG48	275

MJ Gaskets

Size	Item No.	Wt.	Item No.	Wt.
2	MG2			
3	MG3	0.25	TG3	0.50
4	MG4	0.30	TG4	0.60
6	MG6	0.50	TG6	0.75
8	MG8	0.75	TG8	1.10
10	MG10	0.80	TG10	1.30
12	MG12	1.00	TG12	1.65
14	MG14	1.30		
16	MG16	1.45		
18	MG18	1.60		
20	MG20	1.90		
24	MG24	2.10		
30	MG30	2.30		
36	MG36	2.75		
42	MG42	3.20		
48	MG48	3.65		

Gasket/Bolt Packs

Size (in.)	Item No.	Wt. (lb.)
3	MGP3	3
4	MGP4	4
6	MGP6	6
8	MGP8	7
10	MGP10	8
12	MGP12	9

MJ Gland Packs

Size (in.)	Item No.	Wt. (lb.)
2	DGP2	6
3	DGP3	7
4	DGP4	8
6	DGP6	12
8	DGP8	15
10	DGP10	20
12	DGP12	25
14	DGP14	37
16	DGP16	43
18	DGP18	47
20	DGP20	61
24	DGP24	72

Includes: Gland, MJ Gasket, and Standard Tee Bolts & Nuts

Low Alloy, Corrosion Resistant Steel T-Head Bolts

Standard Bolts

Size (in.)	Item No.	Wt. (lb.)
3	MGP3	3
4	MGP4	4
6	MGP6	6
8	MGP8	7
10	MGP10	8
12	MGP12	9

Anti-Rotation Bolts

Size (in.)	Item No.	Wt. (lb.)
3	MGP3	3
4	MGP4	4
6	MGP6	6
8	MGP8	7
10	MGP10	8
12	MGP12	9

MJ Retainer Glands

Pipe Size	Item No.	Wt.	IRON PIPE O.D	Rating (psi)	Qty	Size	Torque (ft-lbs)
3	RMG3	5	3.96	350	4	5/8 X 2	85
4	RMG4	7	4.80	350	4	5/8 X 2	85
6	RMG6	12	6.90	350	6	5/8 X 2	85
8	RMG8	16	9.05	250	9	5/8 X 2	85
10	RMG10	22	11.10	250	16	5/8 X 2	85
12	RMG12	28	13.20	250	16	5/8 X 2	85
14	RMG14	45	15.30	250	20	5/8 X 2	85
16	RMG16	52	17.40	250	24	5/8 X 2	85
18	RMG18	62	19.50	200	24	5/8 X 2	85
20	RMG20	75	21.60	200	28	3/4 X	110
24	RMG24	97	25.80	200	32	3 3/4 X	110
30	RMG30	196	32.00	100	40	3 3/4 X 3	110
36	RMG36	246	38.30	100	48	3/4 X 2-1/2	110
42	RMG42	302	44.50	100	56	3/4 X 2-1/2	110
48	RMG48	380	50.80	100	64	3/4 X 2-1/2	110

RMG

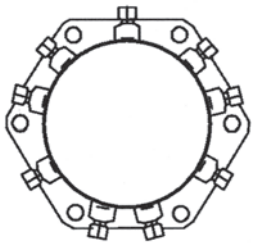

Retainer Packs

Size	Item No.	Wt.
3	RGP3	9
4	RGP4	10
6	RGP6	15
8	RGP8	19
10	RGP10	25
12	RGP12	32

©2007 Sigma Corporation, All Rights Reserved

SIGMA

The Total SIGMA Line Card

Mechanical Joint Fittings*

- Compact, DI, 2"–48" (AWWA C153)
- Full Body, DI, 3"–48" (AWWA C110)

Push-On Fittings*

- Compact DI, 4"–24" (AWWA C153), TYTON® Joint
- Full Body, CI/DI, 4"–24" (AWWA C110)

Flanged Fittings

- DI Fittings 2" – 54" (AWWA C110)
- CI Fittings 3" – 12" (AWWA C110)

*Sizes 3-24 Available with AWWA C116 Fusion Bonded Epoxy
All Fittings Products sizes 4-48" available with PROTECTO 401® Ceramic Epoxy Lining for wastewater applications

Mechanical Joint Accessories

- Gland Packs
- Valve Packs
- Bolt Packs
- T Bolts & nuts
- BLUE T Bolts & Nuts

Retainer Glands with Set Screws 3" – 48"
Flange Adapters (ZIP FLANGE®): 4" – 48"
OMNI-SLEEVE™ (all-in-one patented wall sleeve)
Threaded Flanges & Flange Adapters

- 3" – 54" (for DI Pipe Fabrication)
- Drilled and Tapped Flanges
- 250 lb Drilled Flanges
- Anchor Flanges
- MJ Bell Adapters – Threaded Bell + PE Adapter

Municipal Construction Castings

- **Valve Boxes & Service Boxes, risers and extensions**
- **Service Boxes & Curb Boxes**
- **Meter Boxes & Lids**
- **Manhole Covers, Grates, & Frames, Risers Rings**
- **Ornamental & Architectural Castings**

PV-LOK™ (Serration Type Restraints)

PVM Series: Pipe to MJ Bells

- 4" – 48" Restraints for PVC Pipe with DI Pipe OD
- 2" – 12" Restraints for PVC Pipe with Steel Pipe OD

PVP* Series: Spigot PVC Pipe to PVC Pipe Bells

- 4" – 48" Restraints for PVC with DI Pipe OD
- 2" – 12" Restraints for PVC Pipe with Steel Pipe OD

PVPF Series: Pipe to PVC Pressure Fittings

- 4" – 48" Restraints for PVC Pipe with DI Pipe OD
- 4" – 8" Restraints for PVC with Steel Pipe OD

*Also for use with DI pipe in 4" – 16" range

ONE-LOK™ (Wedge-Action Type Restraints)

SLD Series: DI Pipe to MJ Bells

- 3" – 48" Restraints for DI Pipe
- 4" – 12" 20" Available for Large Size CI Pipe OD (SLDM)
- 4" – 12" Split Restraints (SSLD)
- 4" – 24" Harness Restraint for DI pipe joints (SLDH)

SLC Series: PVC Pipe to MJ Bells

- 4" – 36" Restraints for PVC Pipe with DI Pipe OD
- 4" – 12" Restraints for PVC Pipe with Steel Pipe OD

*3" – 24" restraints are available in loose or packaged with MJ gasket and T-head bolts & nuts. 30" – 48" available as a package only.

Extended Products

- Tie-Rod Accessories
  - Duc lugs
  - Threaded Rods
  - Eye Bolts
  - Pipe Hangers and Clamps
- Flange Accessory Kits
- Pipe Lubricant
- Hydraulic Cement
- Tracer Wire
- Detectable Tape

www.sigmaco.com

Cream Ridge, NJ	Houston, TX	Alexander City, AL	Ontario, CA	Sauk Village, IL
(800)-999-2550	(800)-999-0109	(800)-824-4513	(800)-688-6230	(888)-999-0420
crm-sales@sigmaco.com	htn-sales@sigmaco.com	rps-sales@sigmaco.com	ont-sales@sigmaco.com	chi-sales@sigmaco.com
New York	Texas	Florida	California	Illinois
New Jersey	Louisiana	Alabama	Arizona	Indiana
Maryland	Arkansas	Georgia	Colorado	Wisconsin
Delaware	Missouri	North Carolina	Alaska, Hawaii	Michigan
Virginia	Kansas	South Carolina	Idaho, Utah	Minnesota
New England	New Mexico	Tennessee	Nevada	North Dakota
Eastern Canada	Nebraska	MIssissippi	Washington	South Dakota
Pennsylvania	Oklahoma		Oregon, Wyoming	Ohio
	Iowa		Montana	Kentucky
	Puerto Rico		Western Canada	West Virgina

©2007 Sigma Corporation, All Rights Reserved

NORTHEAST SPECIALTY INSULATIONS, INC.
21 Glenn Street
Lawrence, MA 01843
Phone (978) 688-1162
Fax (978) 686-7570

POLYISOCANURATE

(BRIDGE CROSSING)

TEMPERATURE APPLICATION – 297 F TO 300 F

ITW Trymer 2000 XP Insulation material and aluminum protective jacketing is an ideal system for use on above grade or bridge crossing pipe lines.

- High insulating value (allowing for minimum space requirement)
- Easy to apply 3 foot lengths
- Very light weight
- Durable

ITW Trymer 2000 XP pipe insulation is applied in half sections of 3′ long. The half sections are applied on 18″ stagger from top to bottom. Top and bottom halves are held onto pipe using filament tape wrapped 1 ½ times around the circumference of insulation 9″ on center. Aluminum jacketing is then applied by wrapping pre-cut aluminum jacket around circumference of insulation so as to have overlap of jacket facing downward, creating a water shed. Each additional piece of jacket is then overlapped onto the proceeding pipe covering by a minimum of 2 inches. This jacketing is then held in place by fastening pre-cut stainless steel strapping and wing seals 12″ on center, fastening with a tensioning tool.

ITW Insulation Systems

TRYMER™
PIR insulation

TRYMER™ 2000 XP Polyisocyanurate Insulation

TRYMER™ 2000 XP insulation is polyurethane modified polyisocyanurate cellular plastic. The rigid insulation is supplied in the form of bunstock for fabrication into sheets, pipe shells, tank and vessel coverings, and other shapes for a variety of thermal insulation applications.

TRYMER 2000 XP insulation features improved dimensional stability over a wider range of temperatures than standard polyurethane insulation.

TRYMER insulation is not a known nutrient source for mold and mildew.

Applications

TRYMER 2000 XP insulation is suitable for applications that require a Flame Spread Index of 25 or less and a Smoke Developed Index of 450 or less when tested as per ASTM E84. These are typical requirements for pipe insulation located in non-plenum locations so TRYMER 2000 XP Insulation is particularly ideal for use as pipe insulation in the non-plenum areas of commercial buildings. *For pipe insulation located inside plenums of commercial buildings, ITW recommends the use of our Trymer Green Phenolic Insulation.* TRYMER 2000 XP can be used within the service temperature range of -297°F to 300°F (-183°C to 149°C). Typical applications for TRYMER 2000 XP insulation include:

- industrial pipe insulation, including elbows and fittings
- commercial chilled water insulation
- tank and vessel insulation
- core material for architectural and structural panels
- insulation for shipping containers, trucks or railcars
- core material for factory built panellized constructions
- flat or tapered board stock for roof insulation

ITW can provide general guidelines and recommendations for TRYMER™2000 XP insulation. For additional information, visit www.itwinsulation.com, call 1-800-231-1024 or contact your regional ITW representative.

SIZE

Height:	24" (61 cm)
Width:	48" (122 cm)
Length:	36" (91 cm)
	96" (244 cm)
	108" (274 cm)

Custom lengths are also available. Contact your regional ITW representative for details.

PHYSICAL PROPERTIES

TRYMER 2000 XP insulation exhibits the properties and characteristics indicated in Table 1 when tested as represented. Consultation with local code officials and design engineers/specifiers is recommended before application.

As with all cellular polymers, TRYMER 2000 XP insulation will degrade upon prolonged exposure to sunlight. A covering to block ultra-violet radiation must be used to help prevent degradation. Other coverings to protect the insulation from the elements may be required.

ENVIRONMENTAL DATA

TRYMER 2000 XP insulation is specifically formulated to provide excellent thermal insulation properties without the use of chlorofluorocarbon (CFC) or hydrochlorofluorocarbon (HCFC) blowing agents. In compliance with the Montreal Protocol and the Clean Air Act, TRYMER 2000 XP insulation is manufactured with hydrocarbon blowing agents, which have no ozone depletion potential.

SAFETY CONSIDERATIONS

TRYMER 2000 XP insulation requires care in handling. All persons working with this material must know and follow the proper handling procedures. The current Material Safety Data Sheet (MSDS) and General Handling Recommendations for TRYMER contain information on the safe handling, storage and use of this material. For copies of these documents, visit the literature library at www.itwinsulation.com, call 1-800-231-1024 or contact your regional ITW representative.

Installation

TRYMER 2000 XP insulation is specifically formulated for easy fabrication into many shapes, such as pipe coverings, valve and fitting covers, and others to meet specific design needs. Because of the critical technical design aspects in many applications, ITW recommends contacting qualified designers to specify the total system. For more specific instructions, contact a regional ITW representative or access the literature library at www.itwinsulation.com.

Availability

TRYMER 2000 XP insulation is distributed through ITW's extensive Authorized Fabricator Network. For more information, call: 1-800-231-1024.

TRYMER 2000 XP Polyisocyanurate Insulation

™Trademark of ITW Insulation Systems

Product Information

TRYMER™ 2000 XP complies with ASTM C591, Grade 2, Type IV

Table 1

Physical Properties of TRYMER™ 2000 XP Polyisocyanurate Foam[1,2]

Property and Test Method	Value
Density, ASTM D1622, lb/ft³ (kg/m³)	2.05 (32.8)
Compressive Strength, ASTM D1621, lb/in² (kPa),	
Parallel to rise	25 (172)
Perpendicular to rise - width	24 (165)
Perpendicular to rise - length	30 (207)
Compressive Modulus, ASTM D1621, lb/in² (kPa),	
Parallel to rise	650 (4,485)
Perpendicular to rise - width	475 (3,278)
Perpendicular to rise - length	600 (4,414)
Shear Strength, ASTM C273, lb/in² (kPa),	
Parallel and perpendicular, avg	15 (104)
Shear Modulus, ASTM C273, lb/in² (kPa),	
Parallel and perpendicular, avg	250 (1,725)
Tensile Strength, ASTM D1623, lb/in² (kPa),	
Parallel to rise - thickness	20 (138)
Flexural Modulus, ASTM C203, lb/in² (kPa),	
Parallel to rise	720 (4,968)
Flexural Strength, ASTM C203, lb/in² (kPa),	
Parallel to rise	33 (228)
k-Factor for comparison and product qualification[3], ASTM C518, Btu-in/hr-ft²-°F (W/m°C) @ 75°F (24° C)	0.168 (0.024)
R-Value per inch for comparison and product qualification[3], ASTM C518, hr-ft²-°F/Btu (m²-°C/W) @ 75°F (24°C)	6.0 (1.06)
k-Factor for thickness calculations[4], ASTM C518, Btu-in/hr-ft²-°F (W/m°C), Aged 180 days @ 75°F (24°C)	0.19 (0.027)
R-Value per inch for thickness calculations[4], ASTM C518, hr-ft²-°F/Btu (m²-°C/W) @ 75°F (24°C)	5.3 (0.93)

Property[1] and Test Method[2]	Value
Closed Cell Content, ASTM D6226, % min.	90
Water Absorption, ASTM C272, 24-hour immersion, % by volume	<0.7
Water Vapor Permeability, ASTM E96 perm-inch (ng/Pa•s•m)	4 (5.8)
Dimensional Stability[5], ASTM D2126	
At -40° F (-40°C), 7 days	
Length, % change	0.1
Volume, % change	0.6
At -20° F (-23°C), 7 days	
Length, % change	0.2
Volume, % change	0.2
At 158° F (70°C), 7 days	
Length, % change	1.5
Volume, % change	3.0
At 158° F (70°C), 97% R.H. 7 days	
Length, % change	1.6
Volume, % change	3.4
At 300° F (149°C), 7 days	
Length, % change	2.7
Volume, % change	4.5
Service Temperature[6], °F (°C)	-297 to +300 (-183 to +149)
Surface Burning Characteristics[7], ASTM E84,	
Flame Spread	≤25
Smoke Developed	≤450
Color	Tan

k factor always measure in 1 inch

(1) All properties are measured at 74° (23°C), unless otherwise indicated.

(2) Unless otherwise indicated, data shown are typical values obtained from representative production samples. This data may be used as a guide for design purposes, but should not be construed as specifications. For property ranges and specifications, consult your ITW representative.

(3) Trymer 2000 XP has third party test results showing a 180 day aged k-Factor of 0.168 Btu-in/hr-ft²-°F at 75°F mean temperature. This value demonstrates the excellent performance of the product and can be used for comparison to other materials and to qualify Trymer 2000 XP to specification requirements.

(4) Thermal conductivity test results include no safety factor and are obtained in pristine lab conditions on samples with no joints and that have not been subjected to the vagaries of installation. For Trymer 2000XP, ITW recommends that a more conservative 180 days aged k-Factor curve represented by a value of 0.19 Btu-in/hr-ft²-°F at 75°F mean temperature be used for all system design and insulation thickness calculation purposes.

(5) Frequent and severe thermal cycling can produce dimensional changes significantly greater than those stated here. Special design consideration must be made in systems that cycle frequently.

(6) Above 300°F, discoloration and charring will occur, resulting in an increased k-factor in the discolored area.

(7) This numerical flame spread data is not intended to reflect hazards presented by this or any other material under actual fire conditions.

- For Technical Information: 1-800-231-1024
- For Sales Information: 1-800-231-1024
- ITW Insulation Systems
- 1370 East 40th Street, Building 7, Suite 1, Houston, TX 77022-4104
- www.itwinsulation.com

NOTICE. No freedom from any patent owned by ITW or others is to be inferred. Because use conditions and applicable laws may differ from one location to another and may change with time, Customer is responsible for determining whether products and the information in this document are appropriate for Customer's use and for ensuring that Customer's workplace and disposal practices are in compliance with applicable laws and other government enactments. ITW Insulation Systems assumes no obligation or liability for the information in this document. NO WARRANTIES ARE GIVEN; ALL IMPLIED WARRANTIES OF MERCHANTABILITY OR FITNESS FOR A PARTICULAR PURPOSE ARE EXPRESSLY EXCLUDED.

COMBUSTIBLE: Protect from high heat sources. Local building codes may require a protection or thermal barrier. For more information, consult MSDS, call ITW at 1-800-231-1024 or contact your local building inspector.

ITW Insulation Systems

™Trademark of ITW Insulation Systems

Copyright ITW 2011
Form No. T2000XPI-011411

DESCRIPTION

ITW Pabco/Childers Aluminum Roll Jacketing is manufactured from alloys 3105 and 3003, conforming to ASTM B-209 designation, half-hard temper (H-14) and heavier gauges quarter-hard (H-12 lock-forming quality).

Commercially pure aluminum is relatively soft as structural material. Its strength can be greatly improved by alloying aluminum with small percentages of one or more other elements such as manganese, silicon, copper, magnesium or zinc. Additional strength can be achieved by cold working, such as cold rolling.

Standard alloys and nominal chemical composition

Alloy	Copper	Manganese	Magnesium
3105		.6	.50
3003	.12	1.2	~

ITW reserves the right to ship whichever alloy is in stock at time of order placement, unless advised a specific alloy is requested (may affect lead-time and/or price). Other alloys are special order and minimum quantities and extended lead-time required.

ITW's aluminum roll jacketing is available in smooth, stucco embossed or 3/16 corrugations (cross-crimped) finishes.

THICKNESS *& Suggested Applications*

.010" (.25mm)	Recommended 3/16" corrugated for use on lines up to 14" O.D. including insulation. An intermediate weight jacketing that is economical when used in areas not subject to mechanical abuse.
.016" (.4mm) & **.020"** (.5mm)	The standard for industrial use. Recommended over insulated lines up to 36" O.D. including insulation.
.024" (.6mm)	A heavier weight jacketing used on larger diameter lines and large equipment up to 8 feet in diameter.
.032" (.8mm)	Used in special applications where extra thickness and protection is required, such as fabricated tank head covers and other special fabrications.
.040" (1.0mm) & **.050"** (1.2mm)	Available in rolls, where extra heavy gauges are required because of severe mechanical abuse or special fabricating requirements, such as flat ducts or precipitators. Also recommended for areas subject to high wind conditions.

RECOMMENDED USES

Jacketing is recommended for insulated piping, tanks and vessels less than 8 feet in diameter. Deep corrugated sheets are recommended for diameters greater than 8 feet.

© 2003 ITW Insulation Systems
Pabco/Childers Metals

800-231-1024 Fax (713) 691-7492
www.itwinsulation.com

STRAPPING AND SEALS MANUFACTURED BY GERRARD & CO.

ALUMINUM STRAPPING

Gerrard Aluminum Strapping is manufactured from high quality aluminum alloy conforming to ASTM B-209 designation. It is .020" in thickness to allow for maximum tensioning. Aluminum strapping is available in 1/2" and 3/4" widths. Aluminum strapping is to be used where maximum tension or severe corrosion resistance is not required.

STAINLESS STEEL STRAPPING

Gerrard Stainless Steel Strapping is manufactured from 300 Series stainless steel in a special soft annealed temper to facilitate handling. It is available in 1/2" and 3/4" widths and in .015" and .020" thickness. Blue painted 1/2" width, .020" thickness is available when a need exists to identify underlying asbestos free insulation. Stainless strapping offers the greatest strength and corrosion resistance. T-316 Stainless Steel available upon request.

ALUMINUM BUTT STRAP

ITW's Aluminum Butt Strap is used to seal circumferential joints of aluminum jacketing on insulated piping. It is manufactured from aluminum alloy conforming to ASTM B-209 designation. It is available in .020" thickness, 2" widths and 100' lengths.

STAINLESS STEEL BUTT STRAP

ITW's Stainless Steel Butt Strap is used to seal circumferential joints of stainless steel jacketing on insulated piping. It is manufactured from T-304 stainless steel and is available in .010" thickness, 2" width and 100' lengths.

EXPAND-R-STRAP

Expand-R-Strap has been discontinued. Mity-Springs or Super Mity Springs are recommended as replacement.

ALUMINUM WING SEALS

Gerrard Aluminum Wing Seals are manufactured from heavy duty hard temper aluminum conforming to ASTM B-209 designatioan. These seals are .032" aluminum to allow for maximum tensioning and binding power. They are available in 1/2" and 3/4" widths.

STAINLESS STEEL WING SEALS

Gerrard Stainless Steel Wing Seals are manufactured from heavy duty 300 series annealed stainless steel. These seals are .032" in thickness to allow for maximum tensioning and binding power. They are available in 1/2", and 3/4" widths. T-316 available upon request. *(See Stainless Steel Closed Seals for diameters of 8' or more)*

STAINLESS STEEL CLOSED SEALS

Gerrard Stainless Steel Closed Seals are manufactured from heavy duty .025" 300 series hard temper stainless steel. They are available in 1/2" x 1" and 3/4" x 1" sizes. Closed seals are recommended in lieu of wing seals for use with strapping on tanks and/or vessels with diameters of 8' or more and when applying tensioning springs, since a much stronger closure results from the use of closed seals.

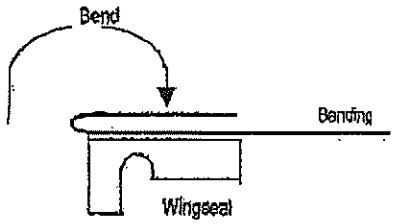

PITTSBURGH CORNING
FOAMGLAS®
INSULATION ACCESSORIES
800 Presque Isle Drive
Pittsburgh, Pennsylvania 15239-2799
Tel: 724/327-6100 • 800/359-8433
Fax: 724/327-5890
www.foamglasinsulation.com

PITTCOTE® 300 FINISH
PRODUCT DATA SHEET

IMPORTANT: MATERIAL SAFETY DATA SHEETS ARE AVAILABLE AND SHOULD BE READ BEFORE USING THIS PRODUCT.

DESCRIPTION:
PITTCOTE® 300 finish is a vapor and weather barrier asphalt coating especially formulated for use with FOAMGLAS® insulation in the low to moderate temperature range.

PITTCOTE® 300 finish is available in trowel and spray grades. Spray grade is a special order. Application is by spray, trowel or glove.

***TYPICAL PROPERTIES:**

Color:	black
Wt/gal, lbs (kg/l):	8.5 (1.02)
Solids, %wt (%vol.):	
Spray:	61.5 to 65.5 (50.7 to 54)
Trowel:	66 to 70 (56.5 to 60)
Coverage: gal/100 ft²	6 to 8
mils	95 to 130
l/m²	2.5 to 3.3
Application Temp, °F (°C) Material:	50 to 120 (10 to 49)
Service Temp, °F (°C)	-40 to 200 (-40 to 93)
Solvent:	mineral spirits
Flash Point, minimum PMCC, wet, °F (°C):	102 (38.8)
Water Vapor Permeability, ASTM E96 Procedure E, perm-in	0.003
perms @ 50 mils	0.06
perm-cm	0.005
**Drying Time, hrs:	Touch 2 Firm 24 Thorough 14 days

* Properties subject to change. Consult Pittsburgh Corning Corporation.
**Will vary with weather conditions and thickness.

SURFACE PREPARATION:
The FOAMGLAS® insulation surface should be dry, free of frost, oil and grease and below 140°F (60°C). Dust or other loose material should be removed.

MATERIAL PREPARATION:
This material should be thoroughly mixed prior to use. Be sure you have read and understand all instructions, cautions, and Material Safety Data Sheets contents before using.

Store PITTCOTE® 300 finish in a warm area for easy application in cold weather. Application temperature should be 50°F to 120°F (10°C to 49°C). Do Not heat can directly with an open flame. Do Not thin to overcome cold temperatures effects. Thin with mineral spirits for brush application only. Do Not thin more than 5% (1qt/5gal) (1 liter/20 liter).

APPLICATION ABOVE GROUND:
See **CAUTION**. Spray or trowel a tack coat of 2 to 3 gal/100ft² (.8 to 1.2 liters/m²) of PITTCOTE® 300 finish to FOAMGLAS® insulation. Embed PC® Fabric 79 into the wet coat overlapping all fabric joints 4" (10cm). Smooth fabric and stretch to remove wrinkles. Apply a second coat after the first coat dries at a rate of 4 to 5 gal/100ft² (1.6 to 2.0 liters/m²). Surface temperature should be 40°F to 140°F (5°C to 60°C) and material temperatures of 50°F to 120°F (10°C to 49°C). Spray application can be made with air or airless equipment. For airless use Graco 45:1 pump with mastic gun 451 orifice with reverse-a-clean attachment or equivalent. Lines should be 3/4" I.D., and pump should be equipped with a hydraulic ram; delivery pressure at gun should be about 1300 psi.

APPLICATION UNDERGROUND:
See **CAUTION**. On underground lines, flash polyester film from lapping or areas of PITTWRAP® jacketing to be coated. When using PITTWRAP® SS jacketing, see jacketing data sheet FI-179A. Be sure FOAMGLAS® insulation surface is free of moisture, dust and any other loose material before applying. Trowel or use plastic gloves a tack coat of 2 to 3 gal/100ft² (0.8 to 1.2 liters/m²) and embed PC® Fabric 79, lapping edges 4" (10cm). Apply a second coat of 2 to 3 gal/100ft² and a second layer of fabric. Apply a top coat of 2 to 3 gal/100ft² so that no fabric is visible when dry. Do not backfill until coating is dry.

CLEAN-UP AND DISPOSAL:
Mineral spirits or kerosene.
See Material Safety data Sheets for proper disposal.

SERIES 2500 RESILIENT WEDGE GATE VALVE

RWGV1

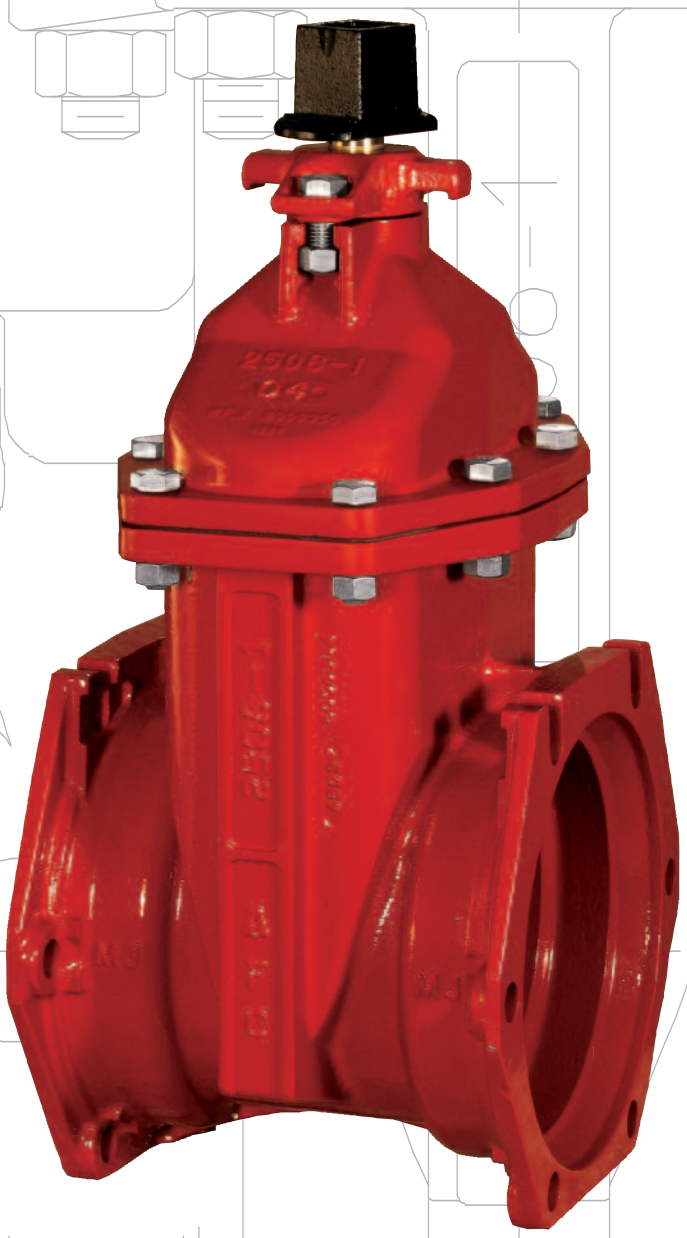

2"–12" 250 p.s.i.g.
SERIES 2500
RESILIENT WEDGE GATE VALVE

AMERICAN FLOW CONTROL
It's What We Know.®

CONSTRUCTION

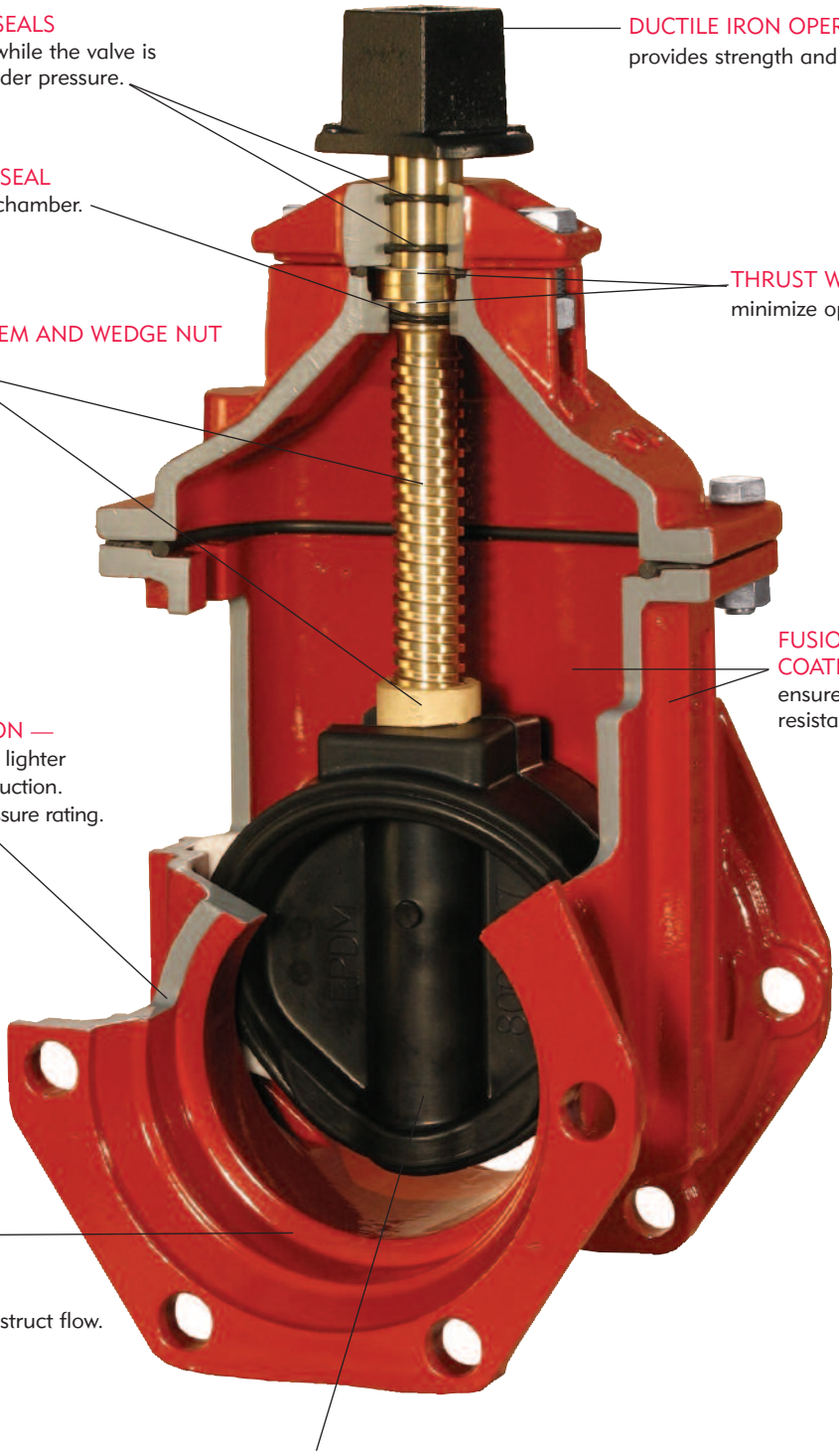

UPPER O-RING SEALS
can be replaced while the valve is fully open and under pressure.

LOWER O-RING SEAL
seals lubrication chamber.

HIGH-STRENGTH BRONZE STEM AND WEDGE NUT
resist corrosion and abuse.

DUCTILE IRON CONSTRUCTION —
Greater strength, durability, and lighter weight than cast gray iron construction.
250 p.s.i.g. AWWA UL & FM pressure rating.

SMOOTH WATERWAY CONSTRUCTION —
Oversize waterway.
No recesses to trap debris or obstruct flow.
Reduces pumping costs.

DUCTILE IRON OPERATING NUT
provides strength and durability.

THRUST WASHERS
minimize operating torque.

FUSION-BONDED-EPOXY COATING INSIDE AND OUT
ensures maximum corrosion resistance for long service life.

EPDM RUBBER-ENCAPSULATED DUCTILE IRON WEDGE
ensures drop tight seal every time with low stem torque.

FEATURES/BENEFITS/SPECIFICATIONS

FEATURES

The **Series 2500** Ductile Iron 250 p.s.i.g. AWWA Resilient Wedge Gate Valve is designed for use in drinking water, sewage, and fire protection systems as well as irrigation and backflow control systems.

Ductile Iron Construction

The ductile iron body, bonnet, and wedge provide strength and a pressure rating that meets or exceeds the requirements of AWWA C515. Strength more than doubles that provided by cast gray iron designs, and the pressure rating is 250 p.s.i.g. All this strength and higher pressure rating is provided in a compact, lightweight, and easy-to-handle ductile iron valve.

Fusion-Bonded Epoxy

The **Series 2500** valve is fully epoxy coated on the interior and the exterior. The fusion-bonded coating is applied prior to assembly so that even the bolt holes and body-to-bonnet flange surfaces are fully epoxy coated.

Triple O-Ring Stem Seals

This valve features triple O-Ring stem seals. Two O-Rings are located above, and one O-Ring is located below the thrust collar. The lower two O-Rings provide a permanently sealed lubrication chamber that will make the valve easier to operate over a longer period of time. The upper O-Ring ensures that sand, dirt, or grit cannot enter the valve to cause damage to the lower O-Rings. This is especially important for buried and sewage service applications.

Thrust Washers

Two thrust washers are used. One is located above, and one is located below the thrust collar. These thrust washers ensure easy operation at all times.

No Flat Gaskets

The body-to-bonnet and bonnet-to-bonnet cover seals are pressure-energized O-Rings. This eliminates the need for excessive bolt loading, which is required by designs that use flat gaskets. The O-Rings are reusable, which eliminates downtime during any needed repair.

The **Series 2500** Resilient Wedge Gate Valve is furnished in configurations that are Listed by Underwriters Laboratories, Inc. and Approved by Factory Mutual Research Corp.

BENEFITS

The **Series 2500 Ductile Iron Resilient Wedge Gate Valve** has these standard features:

- UL Listed-FM Approved
- Seat Tested at 500 p.s.i.g.
- Fusion-Bonded-Epoxy Coating Complies With ANSI/AWWA C550
- 250# Raised Face Flanges Available
- Ductile Iron Body, Bonnet, Wedge, Operating Nut, and Stuffing Box
- Shell Tested at 500 p.s.i.g.
- 250 p.s.i.g. AWWA UL and FM Pressure Rating
- Rubber-Encapsulated Wedge
- Triple O-Ring Stem Seals
- Thrust Washers
- Smooth (No Pocket) Waterway
- 100% Leak-Tight Closure
- NSF Standard 61 Certified
- Complies with AWWA C515

SPECIFICATIONS

Valves 2"-12" shall be resilient wedge type rated for 250 p.s.i.g. cold water working pressure. All ferrous components shall be ductile iron, ASTM A536. Valves 3"-12" shall be in full compliance with AWWA C515. The words "D.I." or "Ductile Iron" shall be cast on the valve. The wedge shall be ductile iron or bronze encapsulated with EPDM rubber.

The wedge shall be symmetrical and seal equally well with flow in either direction.

The gate valve stem and wedge nut shall be copper alloy in accordance with Section 4.4.5.1 of the AWWA C515 Standard. Stainless Steel stems are not acceptable. The NRS stem must have an integral thrust collar in accordance with Section 4.4.5.3 of AWWA C515 Standard. Two-piece stem collars are not acceptable. The wedge nut shall be independent of the wedge and held in place on three sides by the wedge to prevent possible misalignment.

Valves shall be certified by NSF to Standard 61.

Bolting materials shall develop the physical strength requirements of ASTM A307 and may have either regular square or hexagonal heads with dimensions conforming to ANSI B18.2.1. Metric size socket head cap screws, therefore, are not allowed.

The operating nut shall be constructed of ductile iron and shall have four flats at stem connection to ensure even input torque to the stem.

All gaskets shall be pressure-energized O-Rings.

Stem shall be sealed by three O-Rings. The top two O-Rings shall be replaceable with valve fully open and while subject to full rated working pressure. O-Rings set in a cartridge shall not be allowed.

Valve shall have thrust washers located with (1) above and (1) below the thrust collar to ensure trouble-free operation of the valve.

All internal and external surfaces of the valve body and bonnet shall have a fusion-bonded-epoxy coating, complying with ANSI/AWWA C550, applied electrostatically prior to assembly.

Valves shall be American Flow Control's **Series 2500 Ductile Iron Resilient Wedge Gate Valve.**

DRAWING/DIMENSIONS

SERIES 2500 – STANDARD NRS DIMENSIONS 2"-12" SIZES

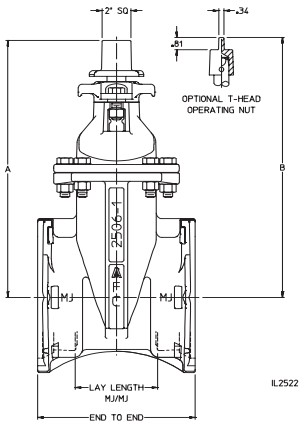

SHOWN WITH 2" OPERATING NUT

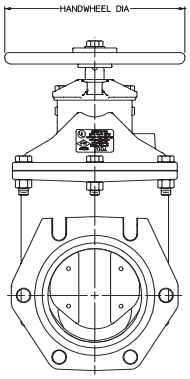

SHOWN WITH OPTIONAL HANDWHEEL

SUBMITTAL DATA

QUANTITY							
2"	2-1/2"	3"	4"	6"	8"	10"	12"

❑ NRS with 2" Sq. Oper. Nut
❑ NRS with T-Head Oper. Nut
❑ NRS with Handwheel
❑ Post Indicator Valve (PIV)
❑ OS & Y

ACTUATOR (Check One)
❑ NRS with Enclosed Miter Gearing
❑ 2" Sq. Oper. Nut Parallel to Waterway
❑ 2" Sq. Oper. Nut Perpendicular to Waterway
❑ Handwheel Perpendicular to Waterway

Open Direction:	❑ Left (C.C.W.)	❑ Right (C.W.)
End Connections:		
Mechanical Joint Accessories:	❑ Yes	❑ No
UL Listed, FM Approved:	❑ Yes	❑ No
Other Requirements (List on a separate sheet):		

See notes at bottom of page.

DIMENSION	VALVE SIZE							
	Series 2500			Series 2500-1				
	2"	2-1/2"	3"	4"	6"	8"	10"	12"
A	9.25	11.03	11.84	13.91	17.12	20.47	24.06	27.59
B	10.22	12.00	N/A	N/A	N/A	N/A	N/A	N/A
End to End – MJ/MJ	8.25	N/A	8.62	10.00	10.50	11.50	12.50	13.50
Lay Length – MJ/MJ	3.25	N/A	3.62	5.00	5.50	6.50	7.50	8.50
End to End – FL/FL (Class 125)	7.00	7.50	8.00	9.00	10.50	11.50	13.00	14.00
End to End – FL/FL (Class 250)	N/A	N/A	11.12	12.00	15.88	16.50	18.00	19.75
End to End – TY/TY	N/A	N/A	N/A	13.00	15.88	17.50	18.75	19.75
End to End – FL/MJ (Class 125)	N/A	N/A	N/A	9.50	10.50	12.28	13.62	14.38
End to End – FL/TY (Class 125)	N/A	N/A	N/A	11.00	13.19	14.50	15.88	16.88
End to End – PVC/PVC	10.75	11.12	11.38	13.00	15.88	17.50	N/A	N/A
End to End – Threaded	6.25	7.38	7.38	N/A	N/A	N/A	N/A	N/A
Handwheel Diameter	8.06	8.00	8.00	10.00	12.00	14.00	15.50	15.50
No. of Turns to Open	9	11	13	14	20	26	32	38

1. 3" through 12" valves meet or exceed requirements of ANSI/AWWA C515.
2. 2-1/2" through 12" valves may be ordered in configurations which are UL Listed and/or FM Approved.
3. 2" through 12" valves have 250 p.s.i.g. AWWA rated working pressure.
4. 2-1/2" through 12" valves have 250 p.s.i.g. UL and FM rated working pressure.
5. Fusion-bonded-epoxy coating meets or exceeds requirements of ASME/AWWA C550.
6. Flanged ends are in accordance with ANSI/AWWA C110/A21.10 (ASME B16.1, Class 125).
7. Threaded ends are in accordance with ASME B16.4, Class 125.
8. Mechanical joint ends are in accordance with ANSI/AWWA C111/A21.11.
9. Tyton® ends and push-on ends are in accordance with ANSI/AWWA C111/A21.11 for use on cast iron (CI) size ductile iron pipe.
10. PVC ends are suitable for use on steel (IPS) sizes of PVC or steel pipe.
11. 4" through 36" valves are certified to ANSI/NSF Standard 61.
12. It is recommended that stems be vertical in raw sewage applications.

DRAWING/DIMENSIONS/PARTS LIST

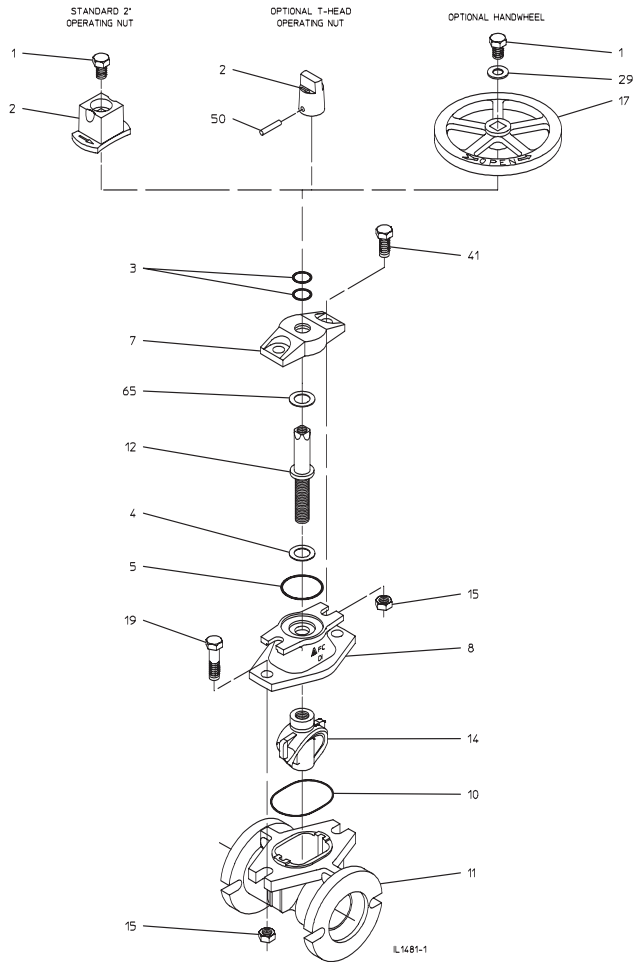

SERIES 2500 – STANDARD NRS PARTS LIST
2" SIZE

REFERENCE NUMBER	DESCRIPTION	MATERIAL	QTY Series 2500
1	Hex Head Bolt, 5/8-11 x 1"	Stainless Steel	1
2	Operating Nut, 2" Square Operating Nut, T-Head (Optional)	Ductile Iron	1
3	O-Ring	Nitrile Rubber	2
4	Lower Thrust Washer	Nylon	1
5	Stuffing Box Gasket	Nitrile Rubber O-Ring	1
7	Stuffing Box	Ductile Iron	1
8	Bonnet	Ductile Iron	1
10	Bonnet Gasket	Nitrile Rubber	1
11	Body	Ductile Iron	1
12	Stem	Manganese Bronze	1
14	Resilient Wedge	Cast Bronze, Coated with EPDM Rubber	1
15	Hex Nut, 5/8-11	Stainless Steel	4
17	Handwheel	Cast Aluminum	1
19	Hex Head Bolt, 5/8-11 x 2-1/4"	Stainless Steel	2
29	Flat Washer, 5/8	Stainless Steel	1
41	Hex Head Bolt, 5/8-11 x 1-1/2"	Stainless Steel	2
50	Spirol Pin, 5/16 x 1-1/2"	Stainless Steel	1
65	Upper Thrust Washer	Stainless Steel	1

DRAWING/DIMENSIONS/PARTS LIST

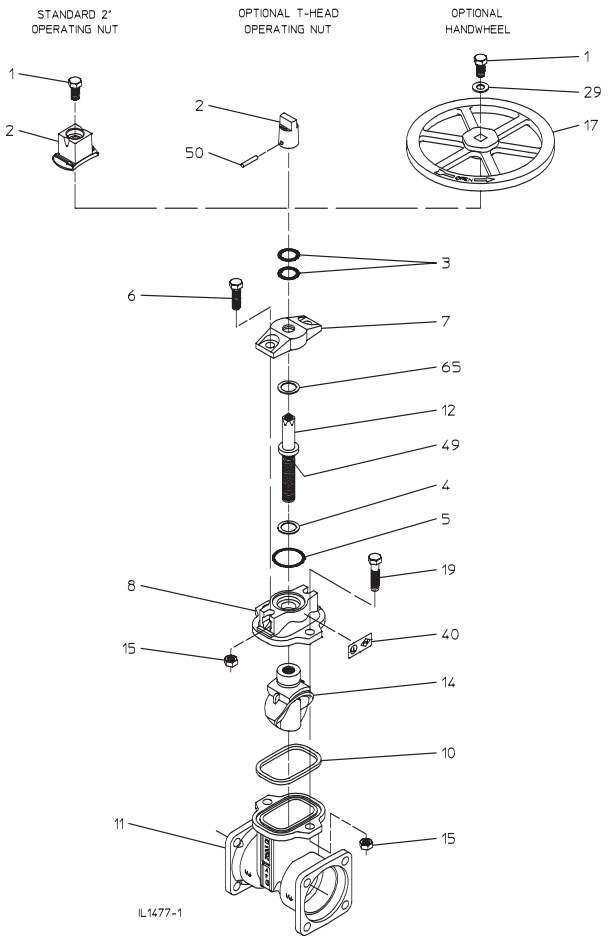

SERIES 2500 – STANDARD NRS PARTS LIST
2-1/2" & 3" SIZES

REFERENCE NUMBER	DESCRIPTION	MATERIAL	QTY Series 2500	
			2-1/2"	3"
1	Hex Head Bolt, 5/8-11 x 1"	Stainless Steel	1	1
2	Operating Nut, 2" Square	Ductile Iron	1	1
	Operating Nut, T-Head (Optional)		1	–
3	O-Ring	Nitrile Rubber	2	2
4	Lower Thrust Washer	Nylon	1	1
5	Stuffing Box Gasket	Nitrile Rubber O-Ring	1	1
6	Hex Head Bolt, 5/8-11 x 1-3/4"	Stainless Steel	2	2
7	Stuffing Box	Ductile Iron	1	1
8	Bonnet	Ductile Iron	1	1
10	Bonnet Gasket	Nitrile Rubber	1	1
11	Body	Ductile Iron	1	1
12	Stem	Manganese Bronze	1	1
14	Resilient Wedge	Cast Bronze, Coated with EPDM Rubber	1	1
15	Hex Nut, 5/8-11	Stainless Steel	4	4
17	Handwheel	Ductile Iron	1	1
19	Hex Head Bolt, 5/8-11 x 2-1/4"	Stainless Steel	2	2
29	Flat Washer, 5/8	Stainless Steel	1	1
40	UL/FM Label	Pressure-Sensitive Acrylic Film	1	1
49	O-Ring	Nitrile Rubber	1	1
50	Spirol Pin, 5/16 x 1-1/2"	Stainless Steel	1	–
65	Upper Thrust Washer	Stainless Steel	1	1

DRAWING/DIMENSIONS/PARTS LIST

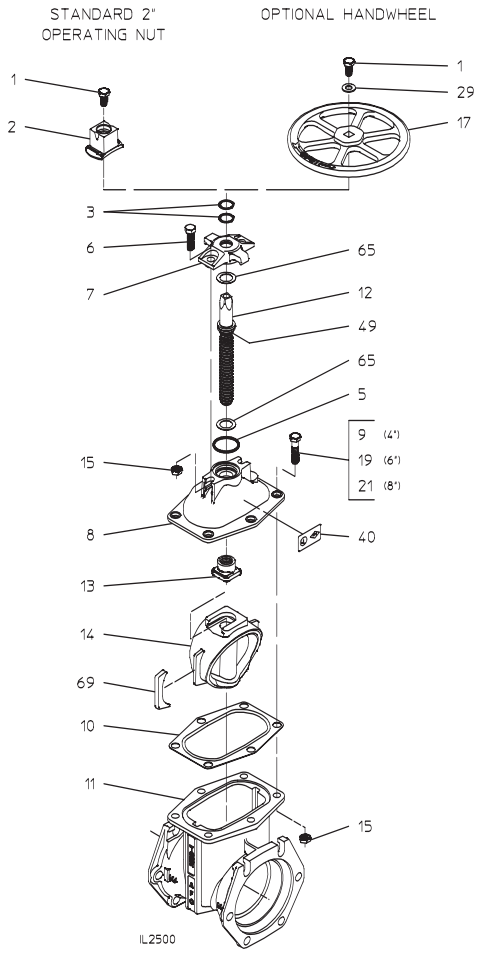

SERIES 2500-1 – STANDARD NRS PARTS LIST
4" – 8" SIZES

REFERENCE NUMBER	DESCRIPTION	MATERIAL	QTY Series 2500-1		
			4"	6"	8"
1	Hex Head Bolt, 5/8-11 x 1"	Stainless Steel	1	1	1
2	Operating Nut, 2" Square	Ductile Iron	1	1	1
3	O-Ring	Nitrile Rubber	2	2	2
5	Stuffing Box Gasket	Nitrile Rubber O-Ring	1	1	1
6	Hex Head Bolt, 5/8-11 x 1-3/4"	Stainless Steel	2	2	2
7	Stuffing Box	Ductile Iron	1	1	1
8	Bonnet	Ductile Iron	1	1	1
9	Hex Head Bolt, 5/8-11 x 2"	Stainless Steel	4	–	–
10	Bonnet Gasket	EPDM Rubber	1	1	1
11	Body	Ductile Iron	1	1	1
12	Stem	Manganese Bronze	1	1	1
13	Wedge Nut	Manganese Bronze	1	1	1
14	Resilient Wedge	Ductile Iron, Encapsulated with EPDM Rubber	1	1	1
15	Hex Nut, 5/8-11	Stainless Steel	6	8	10
17	Handwheel	Ductile Iron	1	1	1
19	Hex Head Bolt, 5/8-11 x 2-1/4"	Stainless Steel	–	6	–
21	Hex Head Bolt, 5/8-11 x 2-1/2"	Stainless Steel	–	–	8
29	Flat Washer, 5/8	Stainless Steel	1	1	1
40	UL/FM Label	Pressure-Sensitive Acrylic Film	1	1	1
49	O-Ring	Nitrile Rubber	1	1	1
65	Thrust Washer	Stainless Steel	2	2	2
69	Wedge Cover	Acetal	2	2	2

DRAWING/DIMENSIONS/PARTS LIST

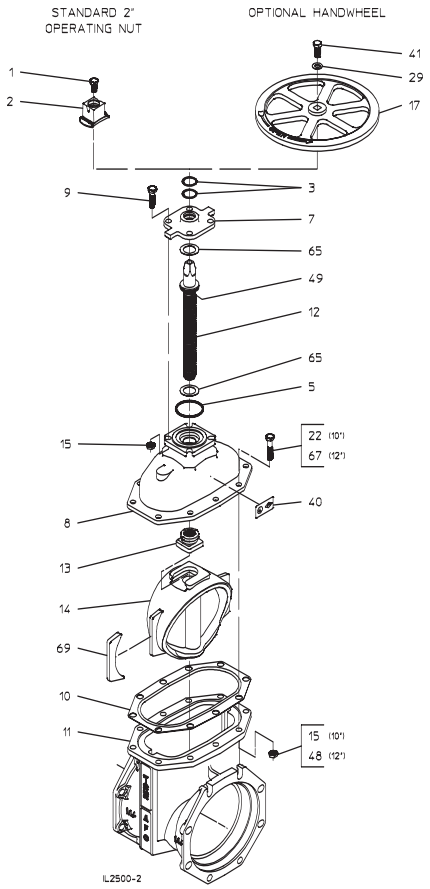

SERIES 2500-1 – STANDARD NRS PARTS LIST
10" & 12" SIZES

REFERENCE NUMBER	DESCRIPTION	MATERIAL	QTY Series 2500-1	
			10"	12"
1	Hex Head Bolt, 5/8-11 x 1"	Stainless Steel	1	1
2	Operating Nut, 2" Square	Ductile Iron	1	1
3	O-Ring	Nitrile Rubber	2	2
5	Stuffing Box Gasket	Nitrile Rubber O-Ring	1	1
7	Stuffing Box	Ductile Iron	1	1
8	Bonnet	Ductile Iron	1	1
9	Hex Head Bolt, 5/8-11 x 2"	Stainless Steel	4	4
10	Bonnet Gasket	EPDM Rubber	1	1
11	Body	Ductile Iron	1	1
12	Stem	Manganese Bronze	1	1
13	Wedge Nut	Manganese Bronze	1	1
14	Resilient Wedge	Ductile Iron, Encapsulated with EPDM Rubber	1	1
15	Hex Nut, 5/8-11	Stainless Steel	14	4
17	Handwheel	Ductile Iron	1	1
22	Hex Head Bolt, 5/8-11 x 2-3/4"	Stainless Steel	10	–
29	Flat Washer, 5/8	Stainless Steel	1	1
40	UL/FM Label	Pressure-Sensitive Acrylic Film	1	1
41	Hex Head Bolt, 5/8-11 x 1-1/2"	Stainless Steel	1	1
48	Hex Nut, 3/4-10	Stainless Steel	–	10
49	O-Ring	Nitrile Rubber	1	1
65	Thrust Washer	Stainless Steel	2	2
67	Hex Head Bolt, 3/4-10 x 3"	Stainless Steel	–	10
69	Wedge Cover	Acetal	2	2

DRAWING/DIMENSIONS/PARTS LIST

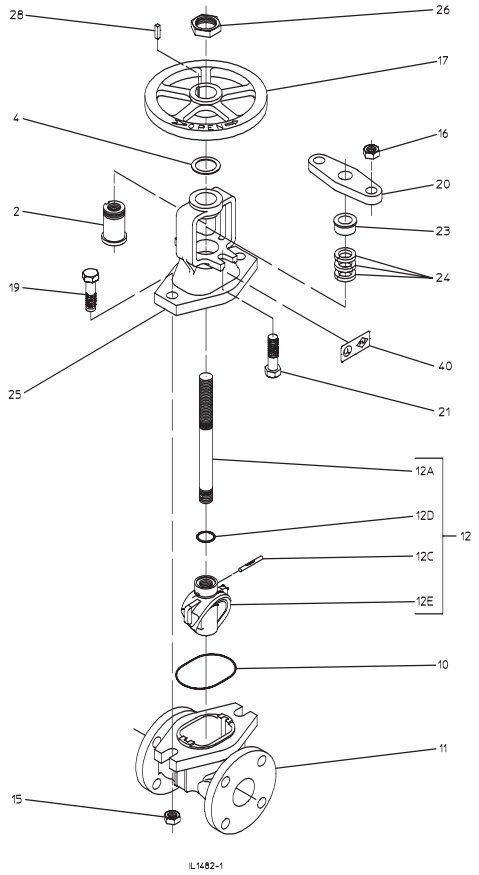

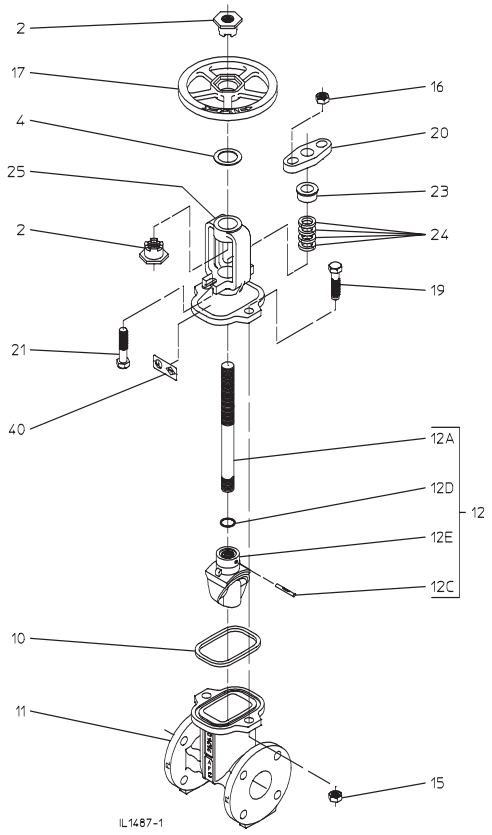

SERIES 2500 – OS & Y PARTS LIST
2", 2-1/2", & 3" SIZES

REFERENCE NUMBER	DESCRIPTION	MATERIAL	QTY Series 2500		
			2"	2-1/2"	3"
2	Stem Nut	Free Cutting Brass	1	–	–
2	Stem Nut	Forging Brass	–	2	2
4	Handwheel Washer	Nylon	1	1	1
10	Bonnet Gasket	Nitrile Rubber	1	1	1
11	Body	Ductile Iron	1	1	1
12	Stem & Wedge Assembly	See Below	1	1	1
12A	Stem	Free Cutting Brass	1	1	1
12C	Groove Pin	Stainless Steel	1	1	1
12D	O-Ring	Buna N Rubber	1	–	–
12D	O-Ring	Nitrile Rubber	–	1	1
12E	Resilient Wedge	Cast Bronze, Coated with EPDM Rubber	1	1	1
15	Hex Nut, 5/8-11	Stainless Steel	2	2	2
16	Hex Nut, 5/8-11	Brass	2	2	2
17	Handwheel	Gray Iron	1	–	–
17	Handwheel	Ductile Iron	–	1	1
19	Hex Head Bolt, 5/8-11 x 2-1/4"	Stainless Steel	2	2	2
20	Gland Follower	Ductile Iron	1	1	1
21	Hex Head Bolt, 5/8-11 x 2-1/2"	Stainless Steel	2	2	2
23	Gland	Sintered Bronze, Oil Impregnated	1	1	1
24	Packing Ring	Tallow Impregnated Flax	3	4	4
25	Bonnet	Ductile Iron	1	1	1
26	Handwheel Nut	Cast Bronze	1	–	–
28	Square Key	Stainless Steel	1	–	–
40	UL/FM Label	Pressure-Sensitive Acrylic Film	1	1	1

DRAWING/DIMENSIONS/PARTS LIST

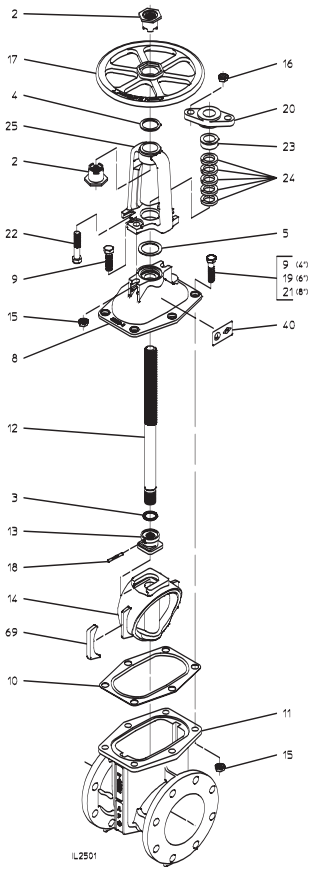

SERIES 2500-1 – OS & Y PARTS LIST
4" – 8" SIZES

REFERENCE NUMBER	DESCRIPTION	MATERIAL	QTY Series 2500-1		
			4"	6"	8"
2	Stem Nut	Bronze	2	2	2
3	O-Ring	Nitrile Rubber	1	1	1
4	Handwheel Washer	Brass	1	1	1
5	Stuffing Box Gasket	Nitrile Rubber	1	1	1
8	Bonnet	Ductile Iron	1	1	1
9	Hex Head Bolt, 5/8-11 x 2"	Stainless Steel	6	2	2
10	Bonnet Gasket	EPDM Rubber	1	1	1
11	Body	Ductile Iron	1	1	1
12	Stem	Free Cutting Brass	1	1	1
13	Wedge Nut	Ductile Iron	1	1	1
14	Resilient Wedge	Ductile Iron, Encapsulated with EPDM Rubber	1	1	1
15	Hex Nut, 5/8-11	Stainless Steel	6	8	10
16	Hex Nut, 5/8-11	Brass	2	2	2
17	Handwheel	Ductile Iron	1	1	1
18	Groove Pin	Stainless Steel	1	1	1
19	Hex Head Bolt, 5/8-11 x 2-1/4"	Stainless Steel	–	6	–
20	Gland Follower	Ductile Iron	1	1	1
21	Hex Head Bolt, 5/8-11 x 2-1/2"	Stainless Steel	–	–	8
22	Hex Head Bolt, 5/8-11 x 2-3/4"	Stainless Steel	2	2	2
23	Gland	Sintered Bronze, Oil Impregnated	1	1	1
24	Packing Ring	Tallow Impregnated Flax	5	5	5
25	Yoke	Ductile Iron	1	1	1
40	UL/FM Label	Pressure-Sensitive Acrylic Film	1	1	1
69	Wedge Cover	Acetal	2	2	2

DRAWING/DIMENSIONS/PARTS LIST

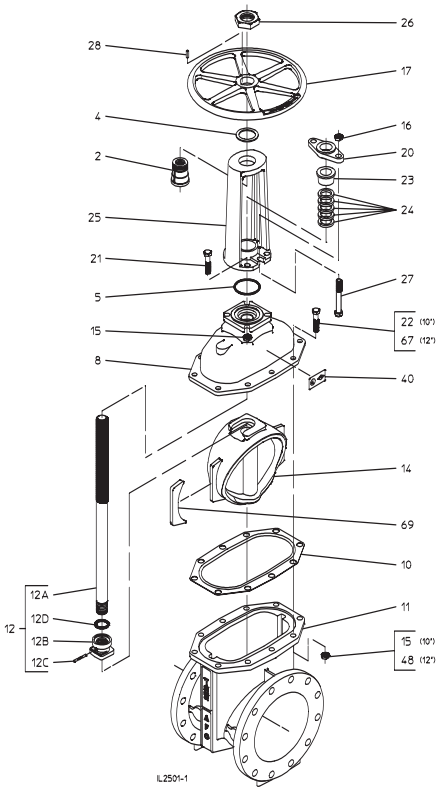

SERIES 2500-1 – OS & Y PARTS LIST
10" & 12" SIZES

REFERENCE NUMBER	DESCRIPTION	MATERIAL	QTY Series 2500-1	
			10"	12"
2	Yoke Nut	Manganese Bronze	1	1
4	Handwheel Washer	Brass	1	1
5	Stuffing Box Gasket	Nitrile Rubber O-Ring	1	1
8	Bonnet	Ductile Iron	1	1
10	Bonnet Gasket	EPDM Rubber	1	1
11	Body	Ductile Iron	1	1
12	Stem & Wedge Assembly	See Below	1	1
12A	Stem	Free Cutting Brass	1	1
12B	Wedge Nut	Ductile Iron	1	1
12C	Groove Pin	Stainless Steel	1	1
12D	O-Ring	Nitrile Rubber	1	1
14	Resilient Wedge	Ductile Iron, Encapsulated with EPDM Rubber	1	1
15	Hex Nut, 5/8-11	Stainless Steel	14	4
16	Hex Nut, 5/8-11	Brass	2	2
17	Handwheel	Ductile Iron	1	1
20	Gland Follower	Ductile Iron	1	1
21	Hex Head Bolt, 5/8-11 x 2-1/2"	Stainless Steel	4	4
22	Hex Head Bolt, 5/8-11 x 2-3/4"	Stainless Steel	10	–
23	Gland	Bronze	1	1
24	Packing Ring	Tallow Impregnated Flax	5	5
25	Yoke	Ductile Iron	1	1
26	Handwheel Nut	Cast Bronze	1	1
27	Hex Head Bolt, 5/8-11 x 4-1/4"	Stainless Steel	2	2
28	Square Key	Stainless Steel	1	1
40	UL/FM Label	Pressure-Sensitive Acrylic Film	1	1
48	Hex Nut, 3/4-10	Stainless Steel	–	10
67	Hex Head Bolt, 3/4-10 x 3"	Stainless Steel	–	10
69	Wedge Cover	Acetal	2	2

American Flow Control

American-Darling Valve and Waterous

A Division of American Cast Iron Pipe Company

www.acipco.com/afc

American-Darling Valve
P.O. Box 2727
Birmingham, AL 35202-2727
Phone: 1-800-326-8051
Fax: 1-800-610-3569
e-mail: bpatton@acipco.com

Waterous Company
125 Hardman Avenue South
South St. Paul, MN 55075-1191
Phone: 1-888-266-3686
Fax: 1-800-601-2809
e-mail: medybedahl@waterousco.com

Distributed By:

AFC-4/05-6M

SIGMA

VALVE BOXES - 2-Piece, Adjustable, SCREW Type & SLIP Type

SCREW TYPE

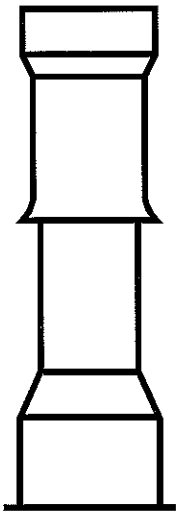

VALVE BOX COMPLETE

Features:

1. Interchangeable with major national brands.
2. Lids are marked 'WATER.' Lids marked 'SEWER' or 'GAS' are available separately.
3. SIGMA Valve Box Lids all have the longer 2" skirts!
4. Valve Box extensions and risers are available for use with these Valve Boxes.

SCREW TYPE	Specifications common to Screw Type and Slip Type						SLIP TYPE
	COMPLETE		TOP		BOTTOM		
Item No.	Wt.* Lbs.	Height Range	Length T	Wt.* Lbs.	Length B	Wt.* Lbs	Item No.
VB261	60	18-22	10	35	15	25	VB461
VB262	80	27-37	16	45	24	35	VB462
VB264	90	39-49	16	45	36	45	VB464
VB266	110	39-59	26	65	36	45	VB466
VB267	135	51-71	26	65	48	70	VB467
VB268	145	63-83	26	65	60	80	VB468

* Wts. are approximate

SLIP TYPE

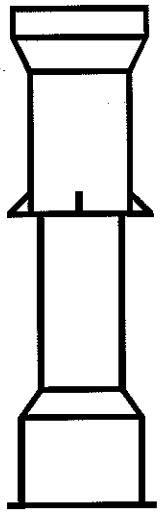

VALVE BOX COMPLETE

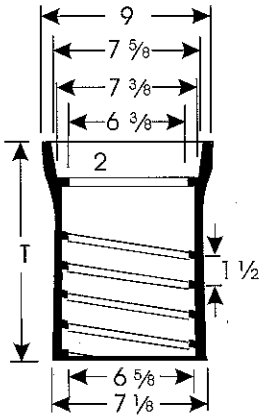

TOP

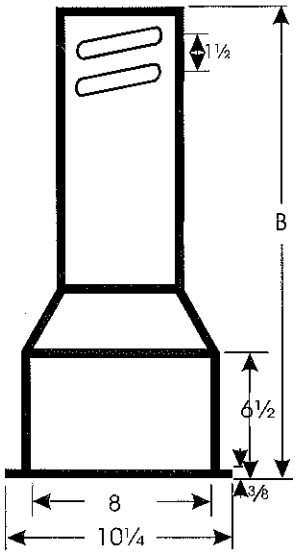

BOTTOM

Lids fit both Screw Type and Slip Type Valve Boxes

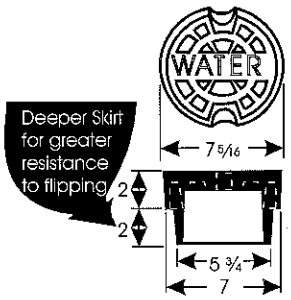

VB2600: 5 1/4 DROP LID
Wt. 12

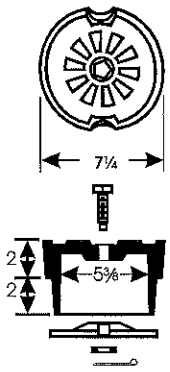

VB2625: 5 1/4 LOCK LID
Wt. 18

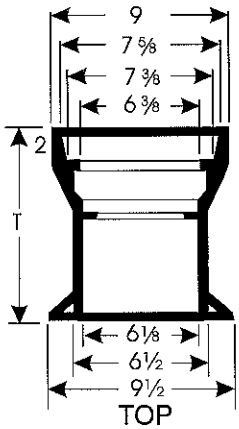

TOP
w/Bottom Flange

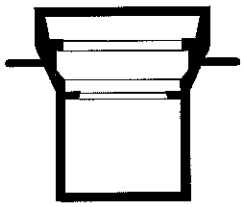

TOP
w/Top Flange

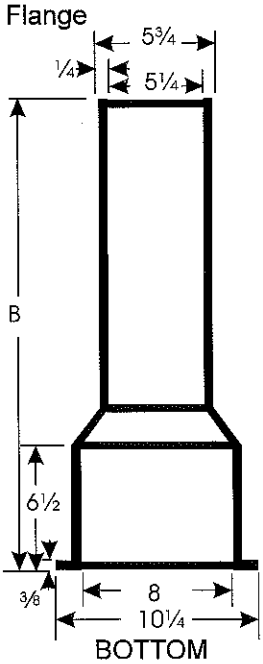

BOTTOM

SUBMITTAL DATA SHEET

NL Ball Style Curb Stop – 76100Q

Q CTS Compression x Q CTS Compression

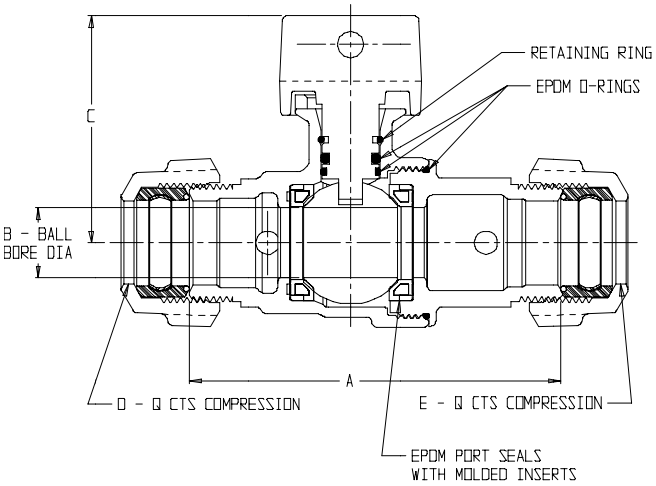

MODEL	SIZE	A	B	C	D	E
76100Q	3/4 X 5/8 X 3/4	3.36	.63	2.33	3/4	3/4
76100Q	3/4	3.99	.75	2.44	3/4	3/4
76100Q	1 X 3/4 X 3/4	4.03	.75	2.44	1	3/4
76100Q	1 X 3/4 X 1	4.25	.75	2.44	1	1
76100Q	1	4.49	1.00	2.65	1	1
76100Q	1 1/4 X 1 X 1	4.79	1.00	2.65	1 1/4	1
76100Q	1 1/4 X 1 X 1 1/4	4.79	1.00	2.65	1 1/4	1 1/4
76100Q	1 1/2	6.05	1.50	3.39	1 1/2	1 1/2
76100Q	2	6.99	2.00	3.70	2	2

SUBMITTAL INFORMATION

- Manufactured in compliance with ANSI/AWWA C800 (latest revision)
- Brass components in contact with potable water conform to ASTM B584, UNS C89833 (latest revision) and identified with "NL"
- Certified to NSF/ANSI 61 and NSF/ANSI 372
- Brass components not in contact with potable water conform to ASTM B62 and ASTM B584, UNS C83600 -85-5-5-5 (latest revision)
- PTFE coated brass ball
- Rated for 300 PSIG water pressure
- Blow out proof EPDM port seals
- End piece joint sealed with an EPDM o-ring and thread locker
- Made in the United States of America

A.Y. McDonald Mfg. Co.
P.O. Box 508
Dubuque, IA 52004-508

Toll Free: 1-800-292-2737
Fax: 1-800-832-9296
Hours: 7:00 a.m. – 5:00 p.m., CST

sales@aymcdonald.com
www.aymcdonald.com

A.Y. McDonald considers the information on this assembly drawing correct when published. Item and option availability, including specifications, are subject to change without notice.

Submitted by:

SUBMITTAL DATA SHEET

NL Ball Style Corporation Stop – 74701BQ

AWWA/CC x Q CTS Compression

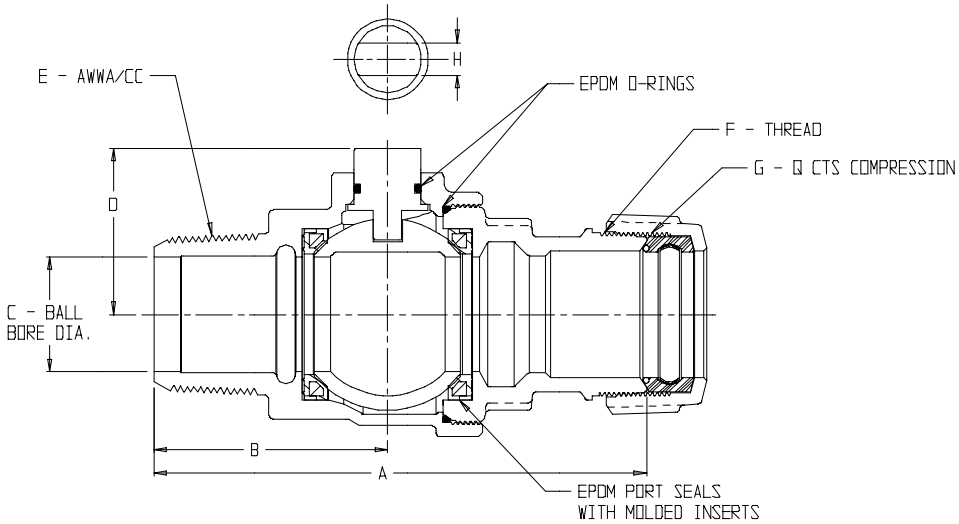

MODEL NO.	SIZE	A	B	C	D	E	F	G	H
74701BQ	3/4	4.22	1.96	.75	1.39	3/4"	3/4" AWWA FLARE	3/4"	.38
74701BQ	3/4 X 1	4.44	1.96	.75	1.39	3/4"	1" AWWA FLARE	1"	.38
74701BQ	1	4.37	2.11	1.00	1.50	1"	1" AWWA FLARE	1"	.28
74701BQ	1 X 1 1/4	4.51	2.11	1.00	1.50	1"	1 1/4" AWWA FLARE	1 1/4"	.28
74701BQ	1 1/2	6.42	3.05	1.50	2.15	1 1/2"	2 1/8-16 SPECIAL	1 1/2"	.42
74701BQ	2	6.86	3.21	2.00	2.46	2"	2 5/8-16 SPECIAL	2"	.42

SUBMITTAL INFORMATION

- Manufactured in compliance with ANSI/AWWA C800 (latest revision)
- Brass components in contact with potable water conform to ASTM B584, UNS C89833 (latest revision) and identified with "NL"
- Certified to NSF/ANSI 61 and NSF/ANSI 372
- Brass components not in contact with potable water conform to ASTM B62 and ASTM B584, UNS C83600 -85-5-5-5 (latest revision)
- PTFE coated brass ball rotates 360°
- Rated for 300 PSIG water pressure
- Blow out proof EPDM port seals
- End piece joint sealed with an EPDM o-ring and thread locker
- Made in the United States of America

A.Y. McDonald Mfg. Co.
P.O. Box 508
Dubuque, IA 52004-508

Toll Free: 1-800-292-2737
Fax: 1-800-832-9296
Hours: 7:00 a.m. – 5:00 p.m., CST

sales@aymcdonald.com
www.aymcdonald.com

A.Y. McDonald considers the information on this assembly drawing correct when published. Item and option availability, including specifications, are subject to change without notice.

Submitted by:

"THE STANDARD OF EXCELLENCE IN THE INDUSTRY"

CASING SPACERS (Stainless Steel) - STYLE – CCS

Casing spacer shall be a two-piece shell per carrier pipe and made from T-304 stainless steel of a minimum 14 gauge thickness. Each shell section shall be lined with a 0.090" thick, ribbed PVC extrusion with a retaining section that overlaps the edges of the shell and prevents slippage. Bearing surfaces (runners) shall be ultra high molecular weight polyethylene (UHMW) to provide abrasion resistance and a low coefficient of friction (0.12). The runners shall be attached to support structures (risers) at appropriate positions to properly support the carrier pipe within the casing pipe and to ease installation. The runners shall be mechanically bolted to the riser. The bolt heads are welded to the inside of the risers for strength. Risers shall be made of T-304 stainless steel of a maximum 10 gauge. All risers shall be MIG welded to the shell. Bottom risers 6" and over in height shall be reinforced. All reinforcing plates shall be 10 ga. T-304 stainless steel and shall be MIG welded to mating parts. ***Standard positioning within the casing pipe*** shall be sized such that the carrier rests near the bottom of the casing pipe and the height of the risers and runners are to provide a bottom clearance not less than one-half inch between the casing pipe and the extreme outside diameter of the joint (bell, seam weld, joint clamp, …) of the carrier pipe. ***Centered & Restrained positioning within the casing pipe*** shall be sized such that the height of the risers and runners are to center the carrier pipe in the casing pipe with a top clearance of three-fourths inch minimum. ***Restrained positioning within the casing pipe*** shall be sized such that the carrier rests near the bottom of the casing pipe and the height of the risers and runners are to provide a bottom clearance not less than one-half inch between the casing pipe and the extreme outside diameter of the joint (bell, seam weld, joint clamp, …) of the carrier pipe and a top clearance of three-fourths inch minimum. ***Multiple Carrier pipes within the casing pipe*** shall be sized such that the carrier pipes are held at fixed distances relative to each other, with the height of the risers and runners to provide not less than three-fourths inch between the casing pipe and the outside diameter of the riser/runner combinations. Special reinforcing plates may be required to stabilize and support structure. All welds and metal surfaces shall be chemically passivated. Due to the numerous application possibilities, consult factory for spacing requirements. Casing spacers shall be Model CCS as manufactured by Cascade Waterworks Mfg. Co. of Yorkville, IL or approved equal.

CASCADE WATERWORKS MANUFACTURING COMPANY
1213 Badger Street • Yorkville, IL 60560 • (630) 553-0840 • (800) 426-4301 • FAX (630) 553-0181
www.cascademfg.com

"THE STANDARD OF EXCELLENCE IN THE INDUSTRY"

CASING SPACERS END SEALS - STYLE – CCES

Casing spacer end seals shall be a pull-over type construction and made from Neoprene with T-304 stainless steel bands for securing the ends of the end seal to the casing pipe and carrier pipe. Casing spacer end seals shall be Model CCES as manufactured by Cascade Waterworks Mfg. Co. of Yorkville, IL or approved equal.

10.09.2007

CASCADE WATERWORKS MANUFACTURING COMPANY
1213 Badger Street • Yorkville, IL 60560 • (630) 553-0840 • (800) 426-4301 • FAX (630) 553-0181
www.cascademfg.com

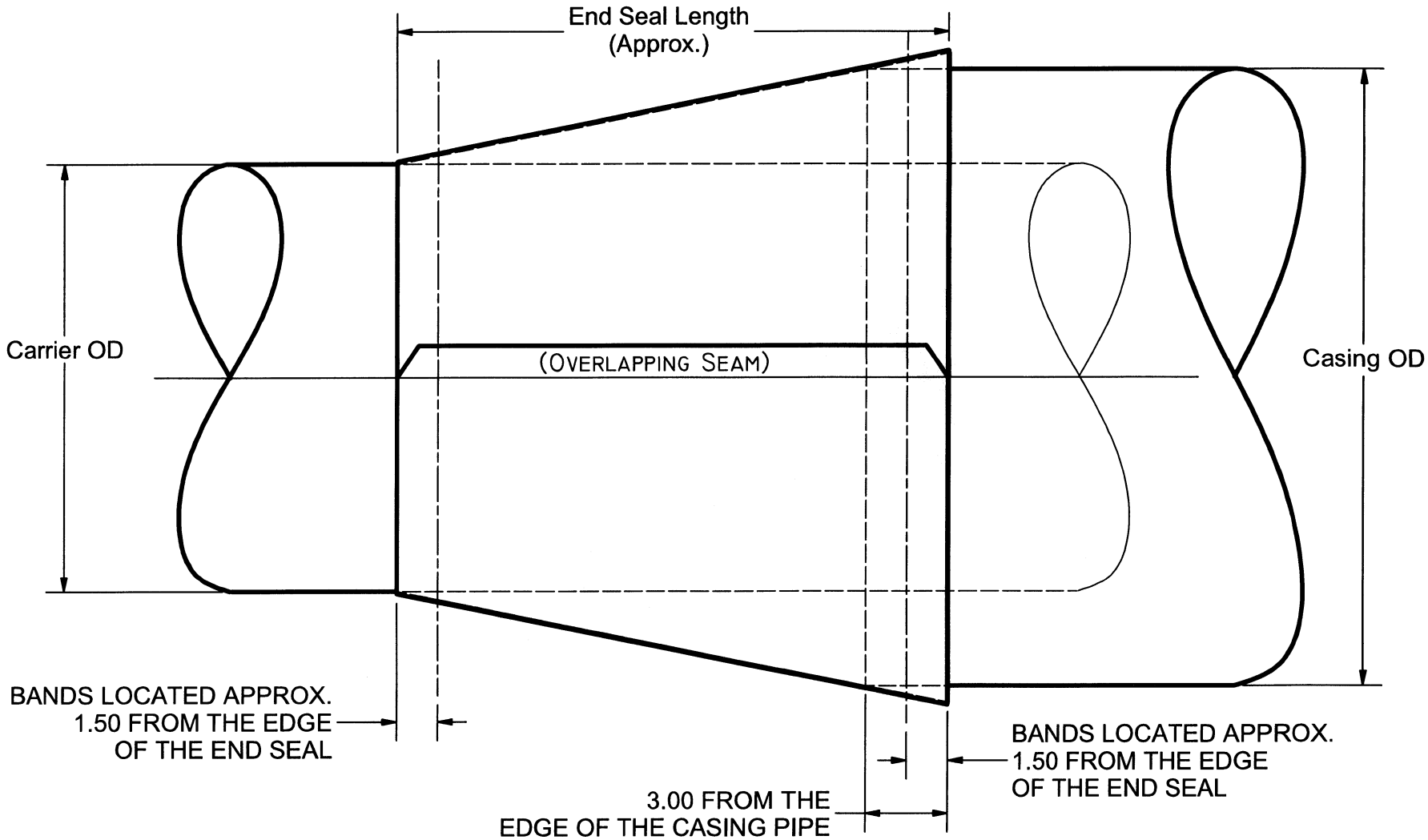

CASCADE MODEL CCES END SEALS

PULL OVER THE CASING AND CARRIER PIPES AFTER INSTALLATION TO PROVIDE A BARRIER TO BACKFILL DEBRIS AND SEEPAGE.

(NOT FOR PRESURE APPLICATIONS.)

20.00"	9.05"	24.5"
END SEAL LENGTH	CARRIER OD	CASING OD

MATERIAL SPECIFICATIONS:

SEAL - NEOPRENE
OTHER MATERIALS AVAILABLE
BANDS - T-304 STAINLESS STEEL

NOTES:
1. FINISH = XXXX
2. 2 PLACE DECIMALS ± .03
3. 3 PLACE DECIMALS ± .010
4. ANGULAR DECIMALS ± 1/2 DEGREE.
5. CHAMFER ALL MACHINED SURFACES .005-.010 x 45° AND REMOVE ALL BURRS.
6. ALL PARTS MUST BE FREE FROM SCALE.
7. NO TOLERANCE NEEDED ON REFERENCE DIMENSIONS.
8. ALL BOLT CIRCLE TOLERANCES PER ANSI B16.5 PARA. 7.7
9. CONCENTRICITY TO CENTERLINE .005

STANDARD TOLERANCES UNLESS OTHERWISE SPECIFIED

End Seal Installation Guide

Push in Carrier side before tightening End Seal

MATERIAL: Neoprene (60 Duro.)		DRAWING NO: End Seal
SCALE: NTS	DRAWN BY: M. Zimmerle	REVISED 1:
DATE: 11/19/2007	APP'D BY:	REVISED 2:

Cascade Waterworks, Mfg.
1213 BADGER STREET • YORKVILLE, ILLINOIS 60560

Q:\Data\Dwgs\STD\End Seals\End Seal - (12.75-20.00 x 1).ipt

SIGMA™

Quality – Service – Commitment – Delivered.

ONE-LOK™ Series SLDE for Ductile Iron Pipe

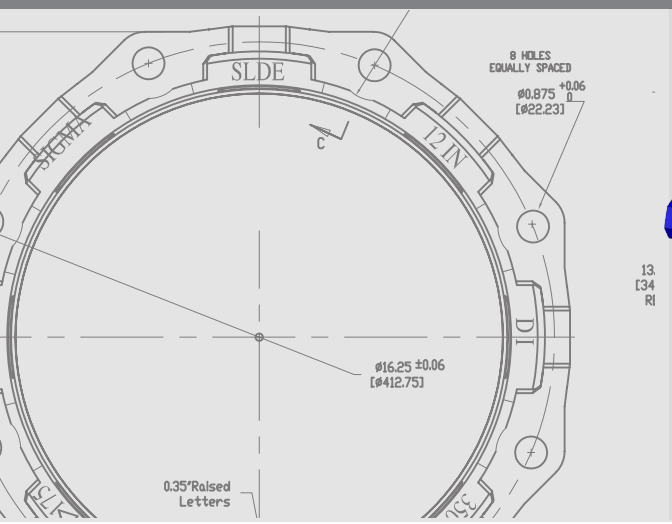

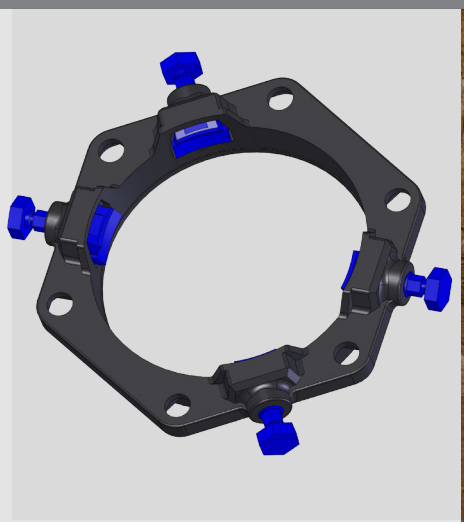

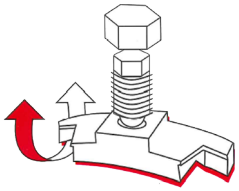

ONE-LOK's unique cam action allows the restraining wedges to "rock," gripping the pipe wall more securely as thrust force increases.

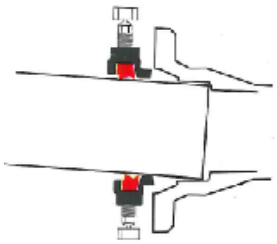

ONE-LOK's cam action also accommodates deflection of the joint during installation, and also allows for subsidence, seismic or other forces after installation, up to the maximum allowed deflection.

Deflection Chart

Nominal Size	Item #	Deflection
3-12"	SLDE3-SLDE12	5 deg
14-16"	SLDE14-SLDE16	2 deg
18-24"	SLDE18-SLDE24	1.5 deg
30-48"	SLDE30-SLDE48	1 deg

The SIGMA ONE-LOK Series SLDE is a mechanical joint restraining gland that implements a series of individually activated wedges into the mechanical joint follower gland. When the wedge segment is engaged by the actuating bolt, the primary contact edges of each wedge segment lock onto the pipe wall. This action causes the primary contact edges to grip the pipe and effectively restrain all classifications of ductile iron pipe.

ONE-LOK SLDE's precision contoured wedges provide proper contact and support of the ductile iron pipe wall. Each wedge is manufactured with an elongated contour that evenly matches the outside circumference of each nominal diameter of ductile iron pipe. This elongated contour also eliminates the concern of damage to both the pipe wall and the interior cement mortar lining caused by point loading, even on the thinner pressure classes of ductile iron pipe.

ONE-LOK SLDE's wedge actuating bolt provides the installer with a visual torque indicator. The breakaway top ensures proper engagement of the wedge segment at the time of installation. Unlike other actuating bolts, the ONE-LOK SLDE is manufactured with a proprietary quality control system that ensures the breakaway tops will activate at the correct torque. The breakaway top is sized to match the same dimensions of the bolts and nuts used to assemble the mechanical joint fitting and follower gland, eliminating the need for special installation tools. Once engaged, the actuating bolt leaves a residual hex-head shank, allowing post-installation disassembly of the restrained joint, if necessary.

SIGMA Corporation

700 Goldman Drive
Cream Ridge, NJ 08514

800 999 2550 p
609 758 1163 f
crm-sales@sigmaco.com

www.sigmaco.com

ONE-LOK™ Series SLDE for Ductile Iron Pipe

ONE-LOK SLDE's unique wedge segment and actuating bolt design allows the two components to interface using a cam action principle, allowing the wedge segments to rock and increase their grip on the pipe wall as thrust on the assembled joint increases. This also allows improved resistance to subsidence, seismic forces, and other movement within the maximum deflection limitations of the mechanical joint under applicable AWWA standards.

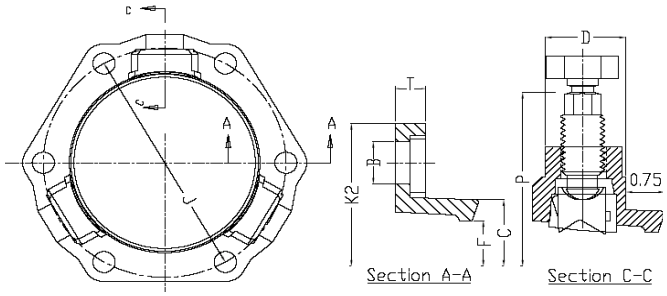

Dimensions in Inches, Weights in Pounds

Size	Item #	Weight (lbs)	Pipe OD	Dimensions								Bolts and Inserts			Rating
				C	F	D	T	P*	B	J	K2	No.	Size	Torque	
3	SLDE3	5.5	3.96	4.84	4.16	1.58	0.55	9.40	0.750	6.19	7.69	2	7/8	80-90	350
4	SLDE4	6.5	4.80	5.92	5.00	1.58	0.55	10.24	0.875	7.50	9.12	2	7/8	80-90	350
6	SLDE6	10.0	6.90	8.02	7.10	1.58	0.60	12.34	0.875	9.50	11.12	3	7/8	80-90	350
8	SLDE8	14.5	9.05	10.17	9.25	1.63	0.75	14.32	0.875	11.75	13.37	4	7/8	80-90	350
10	SLDE10	23.0	11.10	12.22	11.30	1.58	0.85	16.54	0.875	14.00	15.62	6	7/8	80-90	350
12	SLDE12	29.0	13.20	14.32	13.40	1.58	0.85	18.80	0.875	16.25	17.88	8	7/8	80-90	350
14	SLDE14	39.60	15.30	16.40	15.55	1.58	1.125	21.20	0.875	18.75	20.25	10	7/8	80-90	350
16	SLDE16	49.67	17.40	18.50	17.54	1.77	1.21	23.74	0.875	21.00	22.50	12	7/8	80-90	350
18	SLDE18	60.33	19.50	20.60	19.64	1.77	1.25	25.84	0.875	23.25	24.75	12	7/8	80-90	250
20	SLDE20	69.00	21.60	22.70	21.74	1.87	1.25	27.94	0.875	25.50	27.00	14	7/8	80-90	250
24	SLDE24	103.67	25.80	26.88	25.95	1.92	1.47	32.14	0.875	30.00	31.50	16	7/8	80-90	250
30*	SLDE30	158.67	32.00	33.29	32.17	2.13	1.65	39.30	1.125	36.88	39.12	20	1	115-125	250
36*	SLDE36	234.50	38.30	39.59	38.47	3.15	1.75	46.07	1.125	43.75	46.00	24	1	115-125	250
42*	SLDE42	344.0	44.50	45.79	44.67	3.56	2.25	53.25	1.38	50.62	53.38	28	1 1/4	115-125	250
48*	SLDE48	456.0	50.80	52.09	50.97	3.81	2.25	59.55	1.38	57.5	60.26	32	1 1/4	115-125	250

ONE-LOK SLDE was previously referred to as model SLD

P* Dim shows OD after head is broken/removed.
Sizes 3"-12" is approved for thinnest class of DI pipe.

** Product is provided with SIGMASEAL™ improved mechanical joint gasket.*

UL LISTED

FM APPROVED

Sizes 3" - 16" are pressure rated and UL listed for 350 psi on DI pipe and 250 psi sizes 18" - 36".
Sizes 42" and 48" are pressure rated at 250 psi.
Sizes 4" - 12" are FM approved for 175 psi on DI pipe.

Sample Specification:

Restraint for standard mechanical joint fittings shall be incorporated in the design of the follower gland and shall utilize multiple wedge segments that act against the pipe, increasing their resistance as the line pressure increases. The assembled joint shall maintain the maximum flexibility and deflection of all nominal pipe sizes after burial. Restraining gland, wedge segments, and actuating bolts shall be manufactured of high strength ductile iron conforming to the requirements of ASTM A536, Grade 65-45-12. Wedge segments shall be heat treated to a hardness of 370 BHN minimum. Dimensions shall be compatible with standardized mechanical joints conforming to the requirements AWWA C111/ANSI A21.11 and AWWA C153/ANSI 21.53 through 24" (latest revision). Breakaway tops shall be incorporated in the design of the actuating bolts to visually ensure proper torque. The manufacturing of the actuating bolt must incorporate a quality control procedure that is deemed acceptable by the specifier and positively assures precise and consistent operating torque of the breakaway top. The mechanical joint restraining devices shall have a working pressure rating of 350psi (for sizes 3-16") and 250 psi (for sizes 18-48") minimum and provide no less than a safety factor of 2:1. Restraint shall be UL Listed and FM approved in applicable sizes. Restraining device shall be SIGMA ONE-LOK™ or approved equal.

Installation Instructions:

Note: This product is designed for use on ductile iron pipe. Contact SIGMA for use on plain end fittings.

1. Clean fitting socket and pipe end. Lubricate gasket and pipe end with soapy water (or approved pipe lubricant meeting AWWA C111). Install ONE-LOK™ restrainer on the pipe with the lip extension facing the pipe end, followed by the gasket, tapered side toward end of pipe.

NOTE: SIGMASEAL Gasket is recommended for ONE-LOK 30-48". When installing SIGMASEAL gasket, the tapered edges of the gasket must face away from the pipe wall.

2. Insert pipe into fitting outlet and seat the gasket firmly and evenly into the gasket cavity. Maintain a straight joint during assembly.

3. Push the ONE-LOK gland toward the fitting and center it around the pipe with the lip evenly against the gasket. Insert the T-bolts and hand tighten the nuts. If deflection is required, make up after joint assembly but before tightening T-bolts.

4. Tighten T-bolts in an alternating manner maintaining an even gap between the gland and the fitting face at all points around the socket. Repeat until all the T-bolts are within the recommended torque value of AWWA C111/C600.

5. Following proper assembly of the mechanical joint, hand tighten actuating bolts until all wedges make complete contact with the pipe.

6. Tighten each actuating bolt in a clockwise direction, alternating between the bolts in a star pattern, until the break-off tops have been removed. Never tighten a wedge bolt more than 180 degrees before moving to the next bolt.

LOCATIONS

North Region

Cream Ridge, New Jersey (HQ)
Phone (800) 999-2550
Fax (609) 758-1158
crm-sales@sigmaco.com

Sauk Village, Illinois
Phone (888) 999-0420
Fax (708) 758-6790
chi-sales@sigmaco.com

South Region

Alexander City, Alabama
Phone (800) 824-4513
Fax (256) 234-4956
rps-sales@sigmaco.com

Houston, Texas
Phone (800) 999-0109
Fax (281) 987-0200
htn-sales@sigmaco.com

West Region & Canada

Ontario, California
Phone (800) 688-6230
Fax (909) 391-2033
ont-sales@sigmaco.com

Auburn, Washington
Phone (800) 688- 6230
Fax (909) 391-2033
ont-sales@sigmaco.com

Victoriaville, Quebec, Canada
Phone (888) 744-6262
Fax (819) 758-1153
crm-sales@sigmaco.com

Innisfil, Ontario, Canada
Phone (877) 436-3800
Fax (705) 436-6338
crm-sales@sigmaco.com

www.sigmaco.com

Terms and Conditions of Sales available at our website.

AWWA Ductile Iron Fittings

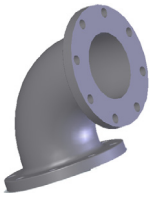

- 2-48” mechanical joint fittings (AWWA C153 & C110)
- 2-48” C110 / 54-64” C153 flanged fittings (cast iron also available)
- 3-48” MJ and 3-48” Flanged AWWA Fittings, Domestic Manufacture
- 4-24” TRIM TYTON® C153 / 14-24” TYTON® push on fittings
- 4-24” C110 push on fittings
- C116 fusion bonded epoxy lining available
- PROTECTO 401® ceramic epoxy lining available

Mechanical Joint Accessories

- Prepackaged and loose mechanical joint accessories
- SIGMASEAL™ improved mechanical joint gasket
- Snap-on multi-purpose gasket for ductile iron or PVC pressure pipes
- Ductile iron set screw retainer glands
- OMNI-SLEEVE™ improved wall penetration sleeve
- Specialty bolts and nuts for mechanical joint assemblies

ONE-LOK™ Wedge Action Restraints

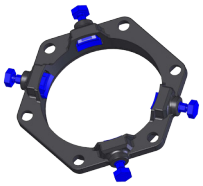

- 3-48” ONE-LOK SLDE restraint for ductile iron pipe (import or domestic)
- 3-36” ONE-LOK SLCE restraint for PVC pipe (import or domestic)
- 3-36” ONE-LOK SLDEH bell joint harness for ductile iron pipe
- 4-12” / 20” ONE-LOK SLDM restraint for oversized cast iron pipe
- 4-36” ONE-LOK SSLD split restraint for existing ductile iron pipe
- 4-36” ONE-LOK SSLDH split restraint harness for existing ductile iron pipe
- 4-12” ONE-LOK SLCEH bell joint harness for PVC pipe

PV-LOK™ Serration Lock Restraints

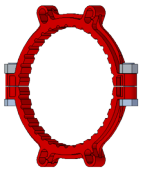

- 4-48” PV-LOK PWM Restraint for MJ Fitting to PVC pipe
- 4-48” PV-LOK PWP Restraint for PVC bell joint restraint
- 4-48” PV-LOK PWPF Restraint for PVC fitting to PVC pipe
- 4-12” PV-LOK PWH PVC bell joint harness
- 2-12” PV-LOK PVM Restraint for MJ Fitting to IPS PVC pipe
- 2-12” PV-LOK PVP Restraint for IPS PVC pipe bell joint
- 4-8” PV-LOK PVPF Restraints for IPS PVC pressure fitting

Flange Adapters

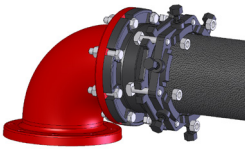

- 3-36” SIGMAFLANGE SFA flange adapter sleeve for PVC and DIP
- 2-48” ZIP FLANGE set screw style flange adapter

Municipal Construction Castings

- Manhole Rings and Covers
- Curb and Meter Boxes
- Frames and Grates
- Storm Inlets
- Valve Boxes, Risers, and Extensions

Products for the Ductile Iron Fabricator

- 3-64” High Hub Threaded Flanges
- 3-48” Tapped High Hub Threaded Flanges
- 3-36” Extra Heavy 250lb Drilled Threaded Flanges
- 3-48” Threaded MJ Bell Adapters
- 3-48” MJ x PE Bell adapter (2ft)
- 3-48” Anchor Flanges
- 3-16” Filler Flanges

Extended Range Products

- FLANGE-PAK™ prepackaged flange accessory sets
- Polyethylene encasement for ductile iron pipe
- Copper tubing products
- Tracer wire & detectable/non-detectable marking tape
- Pipe joint lubricant & hydraulic cement
- Socket clamps and tie rod accessories
- BOXLOK Valve Box Alignment Device
- Cast Iron Companion Flanges

TRIM-TYTON and TYTON are registered trademarks of the United States Pipe and Foundry Company
PROTECTO 401 is a registered trademark of Induron, Inc.

©2011 SIGMA Corporation. All rights reserved. SLDE/10-11

411 Burnham St.
P.O. BOX 280186
East Hartford, CT 06108
TEL (860) 289-0285 FAX (860) 282-1487
Toll Free 1-800-969-0285

Adjustable Two Rod Roller Nefco Fig #N277

EMPIRE INDUSTRIES, INC. FIG. #277
ERICO FIG. #605
TOLCO FIG. #322

Material: Carbon steel axle with cast iron roller.

Finish: ☐ Plain ☐ Electro-galvanized ☐ Painted
☒ Hot Dipped Galvanized

Service: Designed for the suspension of pipe where longitudinal movement may occur due to expansion and contraction, and vertical adjustment is necessary.

Approvals: Complies with Federal Specification WW-H-171-E (Type# 42), A-A-1192 A (type# 41) and Manufacturers' Standardization Society MSS SP-58 and SP-59 (Type# 41).

Ordering: Specify roller size, figure number and finish. Please remember to consider insulation thickness when sizing rollers.

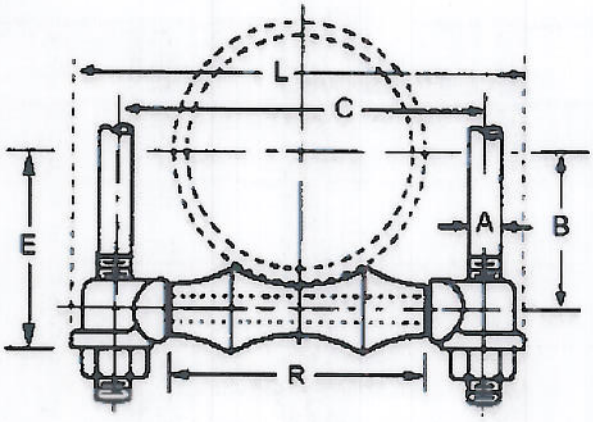

PIPE ROLLER SIZE	PIPE OD	AXLE SIZE	A	B	C	E	L	R	WGT EACH (LBS)	MAX REC LOAD (LBS)
2	2.375	3/8	3/8	1 9/16	4 3/8	2 3/16	5 5/8	2 7/8	0.760	600
2 1/2	2.875	1/2	1/2	1 7/8	5 1/8	2 5/8	6 1/2	3 1/8	1.185	660
3	3.500	1/2	1/2	2 1/8	5 5/8	2 7/8	7	3 3/4	1.385	700
3 1/2	4.000	1/2	1/2	2 1/2	5 7/8	3 1/4	7 1/4	3 7/8	1.500	750
4	4.500	1/2	5/8	2 13/16	7	3 13/16	8 9/16	4 3/4	2.110	750
5	5.563	5/8	5/8	3 3/8	8 1/8	4 3/8	9 3/4	5 3/4	2.570	750
6	6.625	3/4	3/4	3 15/16	9 3/4	4 15/16	11 5/8	6 7/8	4.395	1070
7	7.625	3/4	3/4	4 1/2	10 1/2	5 1/4	12 1/2	8	5.160	1100
8	8.625	7/8	7/8	5 1/8	12 1/8	6 3/8	14 1/4	8 7/8	7.425	1350
10	10.750	7/8	7/8	6 1/4	14	7 1/2	16 1/4	11	9.170	1730
12	12.750	7/8	7/8	7 5/16	15 3/4	8 9/16	18	13	13.150	2400
14	14.000	1 1/8	1	8 3/8	17 3/4	9 13/16	20 1/2	14 1/4	18.745	3130
16	16.000	1 1/4	1	9 1/2	20 9/16	10 15/16	23 3/8	16 7/8	24.540	3970
18	18.000	1 1/4	1	10 7/16	22	11 7/8	24 7/8	18 5/16	27.200	4200
20	20.000	1 1/4	1 1/4	11 1/2	24	13 3/8	27	20 1/4	32.000	4550
24	24.000	1 1/2	1 1/2	13 13/16	28 3/4	16 1/6	32	24 1/4	54.000	6160
30	30.000	1 3/4	1 1/2	17 1/4	35 5/8	19 5/8	39 3/4	30 1/4	82.000	7290

SUBMITTAL INFORMATION		
CUSTOMER:		APPROVAL STAMP
PROJECT NAME:		
PROJECT NUMBER:	SECTION:	
PARAGRAPH:	OTHER:	

Rev: A 2008

Pipe Covering Protection Saddles

Pipe Size	Ins Size	Actual Thickness Of Covering	Hanger Roller Size		Centerline Of Pipe To Outside Of Saddle, C	Centerline Of Pipe To Centerline Of Roll D	Wgt./C Approx	Max. Rec. Load, Lb.
4	1	1 1/16	5	6	3 9/16	4 3/16	158	1800
4	1 1/2	1 9/16	7	7	3 7/8	4 11/16	214	1800
4	2	2 1/16	8	8	4 11/6	5 1/2	295	1800
4	2 1/2	2 9/16	8	10	5 1/8	6 1/16	343	1800
4	3	3 1/16	10	10	5 9/16	6 1/2	449	1800
4	4	4 1/16	12	14	6 9/16	7 11/16	609	1800
5	1	1	7	7	4 1/8	4 13/16	262	1800
5	1 1/2	1 1/2	8	8	4 1/2	5 5/16	330	1800
5	2	2	8	10	4 15/16	5 7/8	345	1800
5	2 1/2	2 9/16	10	12	5 9/16	6 1/2	685	1800
5	3	3 1/6	10	12	6 1/8	7 1/16	449	1800
5	4	4 3/16	12	14	7 3/16	8 1/4	609	1800
6	1	1	8	8	4 9/16	5 3/8	382	1800
6	1 1/2	1 1/2	8	10	5 1/16	5 7/8	428	1800
6	2	2	10	10	5 1/2	6 1/2	540	1800
6	2 1/2	2 1/2	10	12	6 1/16	7 1/16	685	1800
6	3	3	12	12	6 9/16	7 5/8	769	1800
6	4	4 1/8	14	16	7 5/8	9 1/8	1024	1800
8	1 1/2	1 1/2	10	12	6	7 1/8	582	1800
8	2	2	12	12	6 1/2	7 5/8	641	1800
8	2 1/2	2 11/16	12	14	7 1/4	8 5/16	721	1800
8	3	3 1/8	14	16	7 5/8	9 1/8	914	1800
8	4	4 1/8	16	18	8 11/16	10 1/8	1024	1800
10	1 1/2	1 9/16	12	14	7 1/4	8 5/16	666	1800
10	2	2 1/16	14	16	7 5/8	9 1/16	857	1800
10	2 1/2	2 9/16	14	16	8 3/16	9 5/8	891	1800
10	3	3 1/16	16	18	8 7/8	10 1/4	1110	1800
10	4	4 1/16	18	20	9 11/16	11 5/16	1410	1800
12	1 1/2	1 1/2	14	16	8 1/6	9 5/8	761	5000
12	2.	2 1/16	16	18	8 13/16	10 3/16	873	5000
12	2 1/2	2 5/8	16	18	9 1/8	10 11/16	969	5000
12	3	3 1/16	18	20	9 11/16	11 5/16	1138	5000
12	4	4 1/8	20	-	10 13/16	12 3/8	1420	5000
14	1 1/2	1 1/2	16	18	8 7/8	10 3/16	767	5000
14	2	2	16	18	9 1/4	10 3/4	943	5000
14	2 1/2	2 1/2	18	20	9 3/4	11 5/16	969	5000
14	3	3	18	20	10 1/4	11 7/8	1182	5000
14	4	4	20	-	11 7/16	13 1/8	1848	7200
16	1 1/2	1 1/2	18	20	9 7/8	11 3/8	835	5000
16	2	2	18	20	10 1/4	11 7/8	1000	5000
16	2 1/2	2 1/2	20	-	10 7/8	12 7/16	1462	7200
16	3	3	24	-	11 3/16	13 1/8	1817	7200
16	4	4	24	-	12 5/16	14 3/16	2180	7200
18	1 1/2	1 1/2	20	-	10 7/8	12 1/2	892	5000
18	2	2	20	-	11 1/2	13 1/16	1319	7200
18	2 1/2	2 1/2	24	-	12	13 15/16	1689	7200
18	3	3	24	-	12 5/16	14 1/4	1820	7200
18	4	4	24	-	13 1/2	15 7/16	2195	7200
20	1 1/2	1 1/2	24	-	11 3/4	13 11/16	1376	7200
20	2	2	24	-	12 5/16	14 1/4	1498	7200
20	2 1/2	2 1/2	24	-	12 7/8	14 13/16	1679	7200
20	3	3	24	-	13 1/2	15 1/2	1840	7200
20	4	4	30	-	14 3/16	16 5/8	2283	7200
24	1 1/2	1 1/2	30	-	13 5/8	16 1/16	1605	7200
24	2	2	30	-	14 3/6	16 5/8	1762	7200
24	2 1/2	2 1/2	30	-	14 3/4	17 3/16	1875	7200
24	3	3	30	-	15 3/8	17 13/16	1972	7200
24	4	4	30	-	16 9/16	19	2314	7200

Material: Carbon steel

Finish: ☒ Black ☐ Electro-galvanized ☐ Painted

Service: For suspension of insulated pipe where heat losses are to be kept at a minimum

Approvals: Complies with federal specification WW-H-171E (Type 40A or 40B) and manufacturers standardization society SP-58 and SP-69 (Type 39A or 39B)

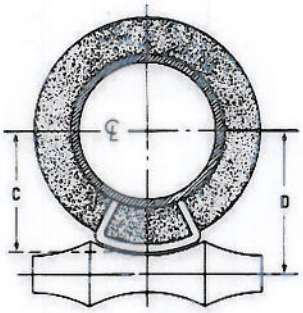

SADDLE WITH ROLL

Rev: A 2008

THREADED ROD
304 STAINLESS STEEL

411 BURNHAM ST.
P.O. BOX 280186
EAST HARTFORD, CT 06108
TEL (860) 289-0285 FAX (860) 282-1487
TOLL FREE 1-800-969-0285

TENSILE: 70,000 PSI MIN
YIELD: 30,000 PSI MIN
HARDNESS: 70 ROCKWELL B MIN
ELONGATION: 30% MIN
REDUCTION IN AREA: 40% MIN
MAGNETIC PERMEABILITY: 2% MAX

NOTES: STAINLESS STEEL ROD IS RECOMMENDED FOR APPLICATIONS WHERE PROTECTION FROM CORROSIVE ENVIRONMENTS IS NEEDED.

300 SERIES (18-8) GROUP STAINLESS IS THE MOST POPULAR OF THE STAINLESS ALLOYS. THIS GROUPING CONSISTS OF 18% CHROMIUM AND 8% NICKEL.

ROD SIZE	WGT./C APPROX.
1/4-20	0.12
3/8-16	0.29
1/2-13	0.54
5/8-11	0.83
3/4-10	1.25
7/8-9	1.70
1-8	2.23
1 1/8-7	2.81
1 1/4-7	3.54
1 1/2-6	5.12

SUBMITTAL INFORMATION		
CUSTOMER:		APPROVAL STAMP
PROJECT NAME:		
PROJECT NUMBER:	SECTION:	
PARAGRAPH:	OTHER:	

411 Burnham St.
P.O. BOX 280186
East Hartford, CT 06108
TEL (860) 289-0285 FAX (860) 282-1487
Toll Free 1-800-969-0285

Heavy Hex Nuts
304 Stainless Steel

Tensile: 100,000 - 125,000 psi approx

Yield: 55,000 - 75,000 psi approx

Hardness: 100 Rockwell B min

Elongation: 30 % approx

Magnetic Permeability: 2.0 Max

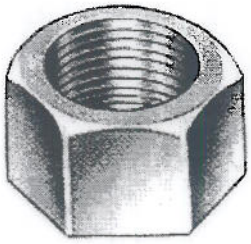

Dimensional Information											
Size	1/4	5/16	3/8	1/2	5/8	3/4	7/8	1	1-1/8	1-1/4	1-1/2
Width Across Flats	1/2	9/16	11/16	7/8	1-1/16	1-1/4	1-7/16	1-5/8	1-13/16	2	2-3/8
Thick	15/64	19/64	23/64	31/64	39/64	47/64	55/64	63/64	1-7/64	1-7/32	1-15/32

Chemical Requirements									
Grade Symbol	**Material**	**Carbon %**	**Manganese %**	**Phosphorus %**	**Sulfur, % [C]**	**Silicon %**	**Chromium %**	**Nickel %**	**Molybdenum %**
8M, 8MA	AISI 316	0.08 MAX	2.00 MAX	0.045 MAX	0.030 MAX	1.00 MAX	16.0 - 18.0	10.0 - 14.0	2.00 - 3.00

Submittal Information		
CUSTOMER:		APPROVAL STAMP
PROJECT NAME:		
PROJECT NUMBER:	SECTION:	
PARAGRAPH:	OTHER:	

Rev: A 2009

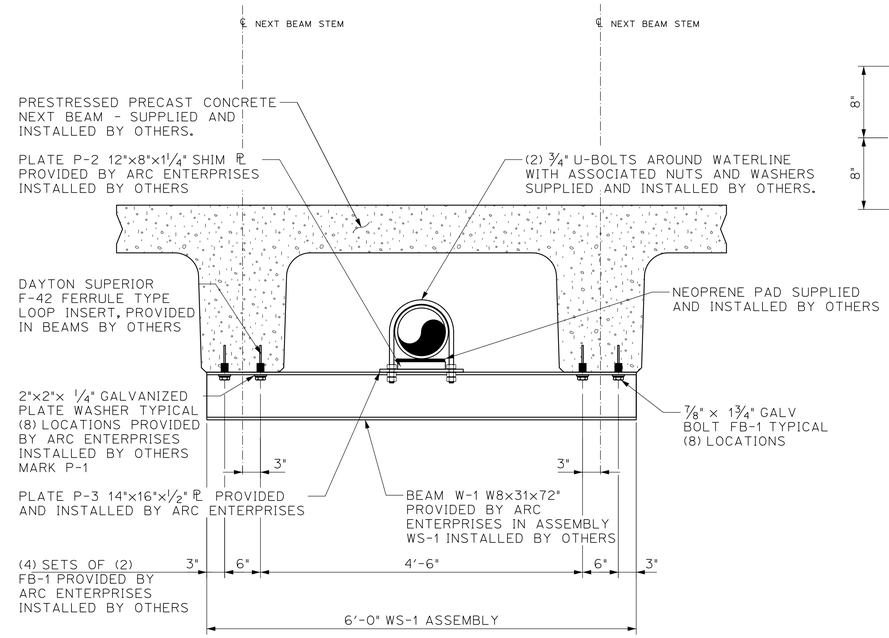

WATERLINE SUPPORT BEAM ASSEMBLY WS-1

(2) WS-1 REQUIRED

FIELD NOTE: DO NOT TIGHTEN A325 BOLTS FOR WATERLINE SUPPORT BEAM W1 CONNECTION TO PRECAST NEXT BEAM BEYOND SNUG TIGHT. IF VIBRATION IS A CONCERN USE A PERMANENT THREADLOCKER ON THE THREADS OF THE BOLTS.

THREADLOCKER PROVIDED AND INSTALLED BY OTHERS

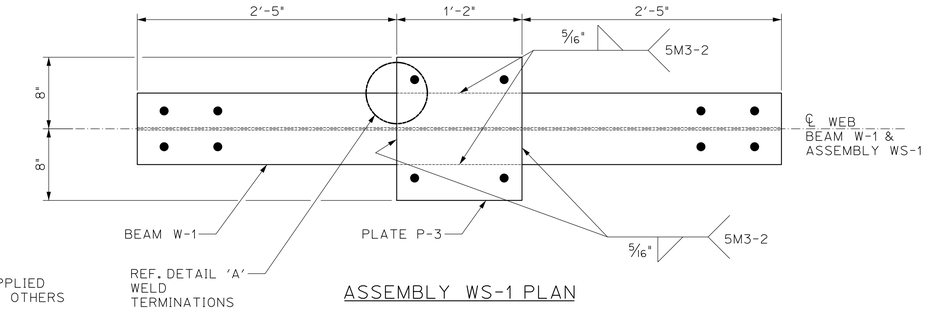

ASSEMBLY WS-1 PLAN

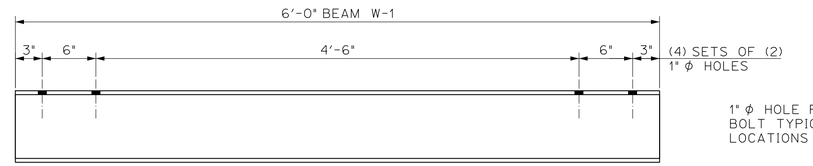

BEAM W-1 FRONT ELEVATION

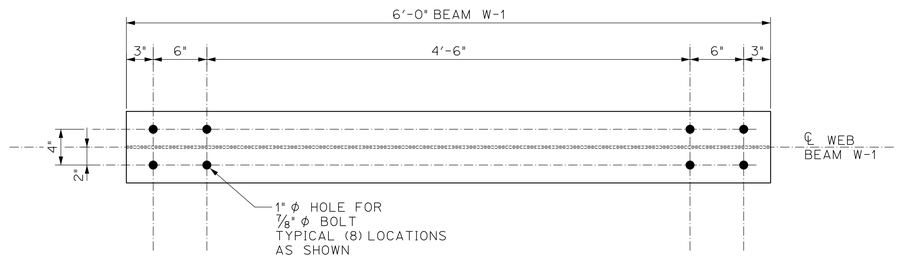

BEAM W-1 PLAN

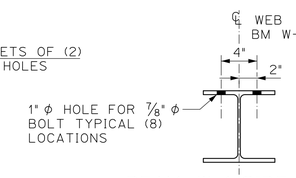

BEAM W-1 SIDE ELEV

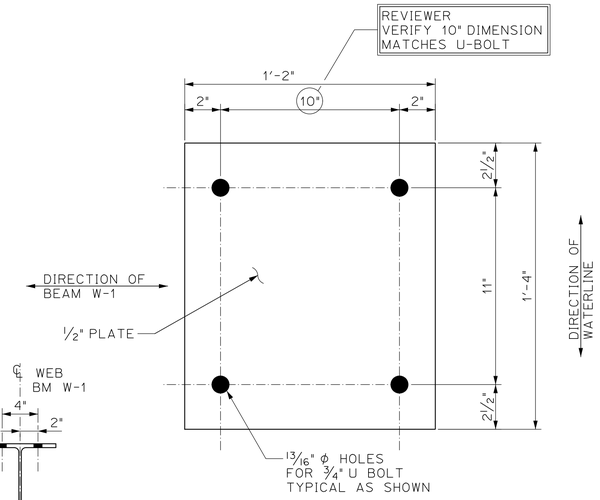

P-3 PLATE PLAN

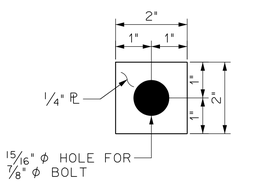

PLATE WASHER P-1

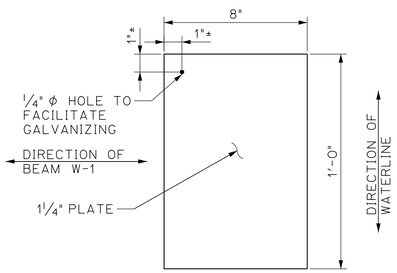

P-2 PLATE PLAN

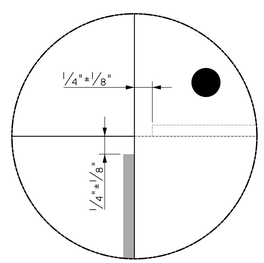

DETAIL 'A' WELD TERMINATIONS

GENERAL FABRICATION NOTES

1.) ALL MATERIAL SHALL BE AASHTO M270 GR. 36

2.) STEEL SHALL BE BLAST CLEANED TO SSPC SP-6.

3.) ALL CUTTING AND DRILLING OF MATERIAL SHALL BE DONE IN SUCH A MANNER THAT THE RESULTING SURFACES ARE FREE FROM ANY GOUGES OR BURRS.

4.) DIE STAMPING IS ALLOWED IN SPECIFIC LOCATIONS WITH THE APPROVAL OF THE ENGINEER.

5.) EXPOSED CORNERS SHALL BE ROUNDED TO APPROXIMATELY AN 1/8" RADIUS

6.) ALL WELDING PROCEDURES SHALL BE IN ACCORDANCE WITH THE LATEST EDITION OF THE A.W.S.

7.) NON DESTRUCTIVE TESTING OF WELDS SHALL BE IN ACCORDANCE WITH ANSI/AASHTO/AWS D1.5 - SECTION 6.

8.) FIELD BOLTS SHALL HAVE A HEX HEAD. AND ONE HARD WASHER EACH.

9.) HARDENED WASHERS WILL BE REQUIRED FOR OVER OVERSIZED HOLES.

10.) ASSEMBLIES SHALL BE HOT DIP GALVANIZED IN ACCORDANCE WITH ASTM A123 AFTER FABRICATION

11.) SHIM PLATES AND PLATE WASHERS SHALL BE HOT DIP GALVANIZED IN ACCORDANCE WITH ASTM A123

12.) FASTENERS & HARDENED WASHERS SHALL BE GALVANIZED IN ACCORDANCE WITH ASTM A153

SHIPPING MARK	NO OF PIECES	DESCRIPTION	PIECE MARK	DESCRIPTION	THICKNESS & WIDTH	LENGTH	NUMBER OF PCS PER SHIP MARK	TOTAL NUMBER OF PIECES	COMMENTS	WEIGHT PER PC	TOTAL WEIGHT PER SHIP MK
WS-1	2	WATERLINE SUPPORT ASSEMBLY									260 LBS
			W-1	W8x31	N/A	6'-0"	1	2	AASHTO M270 GRADE 36	186 LBS	
			P-1	PLATE WASHER	¼" x 2"	2"	8	16	AASHTO M270 GRADE 36	0.25 LBS	
			P-2	SHIM PLATE	1-¼" x 8"	1'-0"	1	2	AASHTO M270 GRADE 36 - SHIP LOOSE	35 LBS	
			P-3	SUPPORT PLATE	½" x 1'-2"	1'-4"	1	2	AASHTO M270 GRADE 36	35 LBS	

FIELD BOLTS & THREADED PARTS

SHIPPING MARK	NO OF PIECES	DESCRIPTION	DIA	LENGTH	COMMENTS
FB-1	16	FIELD BOLTS	⅞"	1 ¾"	ASTM A325 TYPE I GALV. - SHIP LOOSE WITH 1 - ASTM F436-1 GALV. WASHER PER BOLT

FINISH	HOT DIP GALVANIZED
MATERIAL	SEE BILL OF MATERIALS
HOLES	SEE PLANS
ELECTRODES	PER WELD PROCEDURE
WELDS	PER WELD PROCEDURE
SURFACE PREP	SSPC SP6

NO	DATE	DESCRIPTION	BY

REVISIONS

ARC ENTERPRISES, INC.
ADVANCED RESOURCES & CONST. ENTERPRISES, INCORPORATED
P.O. BOX 120 KINGFIELD, ME. 04947
PHONE: (207) 265-2646 - FAX: (207) 265-4054

DRAFTER ETC
DATE MAR. 2014
CHECKED
DATE

WATERLINE SUPPORT ASSEMBLY WS-1
MIDDLEBURY, VERMONT
VT ROUTE 125, BRIDGE NO. 13
GC: T BUCK CONSTRUCTION

PROJECT NO. 13-169A
DWG. NO. 1