STATE OF VERMONT
AGENCY OF TRANSPORTATION

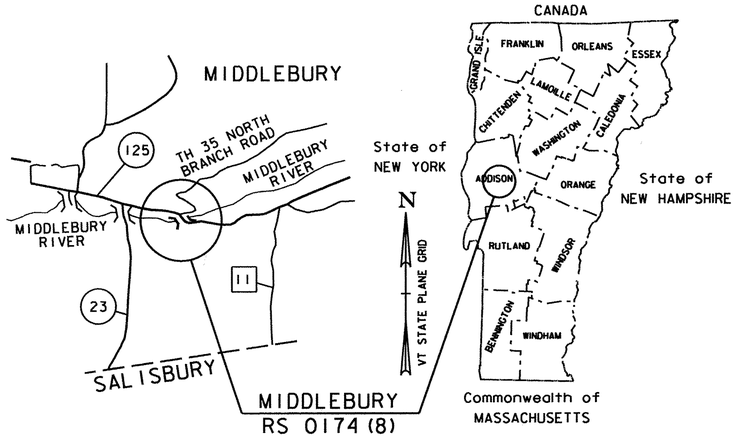

PROPOSED IMPROVEMENT
BRIDGE PROJECT

TOWN OF MIDDLEBURY
COUNTY OF ADDISON
VT ROUTE 125 (MAJOR COLLECTOR), BRIDGE NO 13

PROJECT LOCATION : LOCATED IN THE COUNTY OF ADDISON, TOWN OF MIDDLEBURY, ON VT 125; BRIDGE NO. 13 OVER MIDDLEBURY RIVER, APPROXIMATELY 1.58 MILES EAST OF THE INTERSECTION OF US 7 AND VT 125.

PROJECT DESCRIPTION : WORK TO BE PERFORMED UNDER THIS PROJECT INCLUDES THE REMOVAL AND REPLACEMENT OF BRIDGE NO. 13 ON A NEW ALIGNMENT, WITH ASSOCIATED ROADWAY WORK.

LENGTH OF STRUCTURE : 66.00 FEET
LENGTH OF ROADWAY : 634.00 FEET
LENGTH OF PROJECT : 700.00 FEET

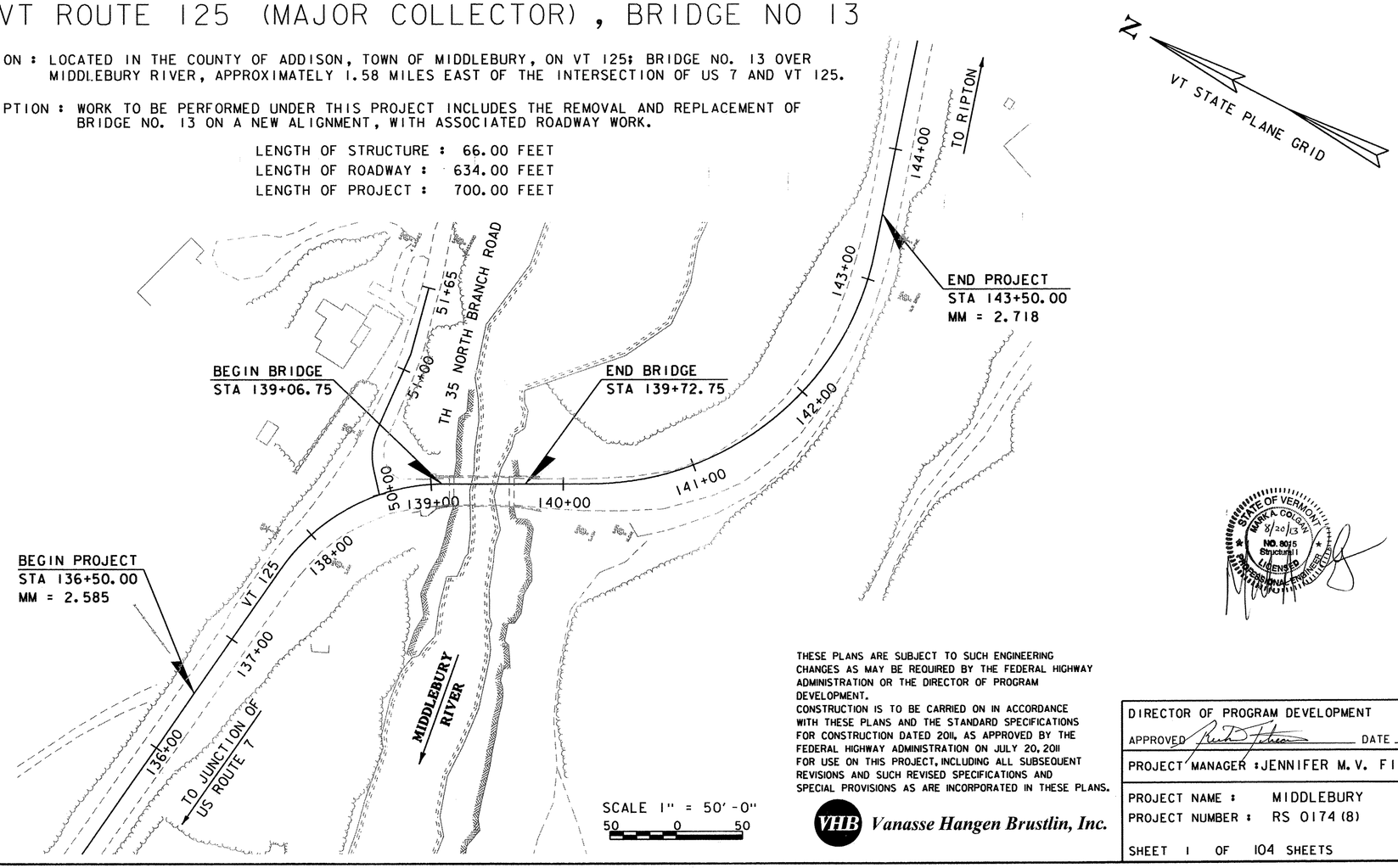

QUALITY ASSURANCE PROGRAM: LEVEL 2

CONVENTIONAL SYMBOLS

COUNTY LINE
TOWN LINE
LIMITS OF ACCESS
POINT OF ACCESS
FENCE LINE
STONE WALL
TRAVELED WAY
GUARD RAIL
RAILROAD
SURVEY LINE
CULVERT
POWER POLE
TELEPHONE POLE
TREES
CONTROL OF ACCESS
PROPERTY LINE
R.O.W. TAKING LINE
SLOPE RIGHTS (SR)
TOP OF CUT
TOE OF SLOPE

SURVEYED BY : VTRANS
SURVEYED DATE : DECEMBER 1998

DATUM
VERTICAL NAVD 88
HORIZONTAL NAD 83/92

THESE PLANS ARE SUBJECT TO SUCH ENGINEERING CHANGES AS MAY BE REQUIRED BY THE FEDERAL HIGHWAY ADMINISTRATION OR THE DIRECTOR OF PROGRAM DEVELOPMENT.
CONSTRUCTION IS TO BE CARRIED ON IN ACCORDANCE WITH THESE PLANS AND THE STANDARD SPECIFICATIONS FOR CONSTRUCTION DATED 2011, AS APPROVED BY THE FEDERAL HIGHWAY ADMINISTRATION ON JULY 20, 2011 FOR USE ON THIS PROJECT, INCLUDING ALL SUBSEQUENT REVISIONS AND SUCH REVISED SPECIFICATIONS AND SPECIAL PROVISIONS AS ARE INCORPORATED IN THESE PLANS.

VHB Vanasse Hangen Brustlin, Inc.

STATE OF VERMONT
MARK A. COLGAN
8/20/13
NO. 8015
Structural
LICENSED
PROFESSIONAL ENGINEER

DIRECTOR OF PROGRAM DEVELOPMENT
APPROVED _____ DATE 8-21-13
PROJECT MANAGER : JENNIFER M. V. FITCH, P.E.

PROJECT NAME : MIDDLEBURY
PROJECT NUMBER : RS 0174 (8)

SHEET 1 OF 104 SHEETS

VHB 57438

STATE OF VERMONT
AGENCY OF TRANSPORTATION

PRELIMINARY INFORMATION SHEET (BRIDGE)

Version 12.01.01c

LRFD

INDEX OF SHEETS

PLAN SHEETS

1	TITLE SHEET
2	PRELIMINARY INFORMATION SHEET
3	TYPICAL BRIDGE SECTION
4	TYPICAL ROADWAY SECTIONS
5	TYPICAL EARTHWORK SECTIONS
6 - 8	PROJECT NOTES
9 - 11	QUANTITY SHEETS
12	BRIDGE QUANTITY SHEET
13	EARTHWORK SHEET
14	CONVENTIONAL SYMBOLOGY LEGEND
15	TIE SHEET
16	ALIGNMENT LAYOUT SHEET
17 - 19	LAYOUT SHEETS
20 - 21	PROFILE AND BANKING DIAGRAM
22	PROFILE SHEET NORTH BRANCH RD
23 - 28	TRAFFIC CONTROL SHEETS
29	DRAINAGE & UTILITY LAYOUT SHEET
30	DRAINAGE DETAIL SHEET
31	WATERLINE LAYOUT SHEET
32 - 33	WATERLINE DETAILS
34 - 36	TRAFFIC SIGNS & STRIPING
37	TRAFFIC SIGN SUMMARY SHEET
38	BORING INFORMATION SHEET
39 - 45	BORING LOGS
46	PLAN AND ELEVATION (BRIDGE)
47	FRAMING PLAN
48 - 50	NEXT BEAM DETAILS
51 - 52	CURTAIN WALL DETAILS
53	CAST-IN-PLACE OVERLAY DETAILS
54 - 55	BEARING DETAILS
56 - 57	PRECAST APPROACH SLAB
58	CORNER DETAILS
59	ABUTMENT NO 1 FOOTING
60	ABUTMENT NO 2 FOOTING
61	ABUTMENT NO 1 PLAN AND ELEVATION
62	ABUTMENT NO 2 PLAN AND ELEVATION
63	WINGWALL NO 1
64	WINGWALL NO 2
65	WINGWALL NO 3
66	WINGWALL NO 4
67 - 68	WINGWALL DETAILS
69 - 70	PRECAST ARCH DETAILS
71	PRECAST ARCHITECTURAL PANEL PLAN
72	WEST PRECAST ARCHITECHTURAL PANEL ELEVATION
73	EAST PRECAST ARCHITECHTURAL PANEL ELEVATION
74 - 75	PRECAST ARCHITECHTURAL PANEL DETAILS
76 - 77	SUPPORT BEAM DETAILS
78	BRIDGE RAIL LAYOUT
79 - 81	BRIDGE RAIL DETAILS
82 - 87	ROADWAY CROSS SECTIONS
88 - 89	NORTH BRANCH RD CROSS SECTIONS
90 - 92	CHANNEL CROSS SECTIONS
93	EPSC NARRATIVE
94 - 96	EPSC EXISTING SITE PLAN
97 - 99	EPSC CONSTRUCTION SITE PLAN
100 - 102	EPSC FINAL SITE PLAN
103 - 104	EPSC DETAILS

STANDARDS LIST

A-76	STANDARDS FOR TOWN & DEVELOPMENT ROADS	03-03-2003
B-5	SLOPE GRADING, EMBANKMENTS, MUCK	06-01-1994
C-3A	SIDEWALK RAMPS	03-10-2008
C-10	CURBING	02-11-2008
D-1	PRECAST REINF CONCRETE PIPE DROP INLET WITH CAST IRON GRATE	06-01-1994
D-15	PRECAST REINF CONC. MH-GRATES, CAST IRON GRATE WITH FRAME, TYPE D & E	06-01-1994
D-30	UNDERDRAIN CONSTRUCTION DETAILS	08-13-2007
E-100	CONSTRUCTION APPROACH SIGNS	01-02-2004
E-100A	SIDE ROAD CONSTRUCTION - APPROACH SIGNS	01-02-2004
E-102	CONSTRUCTION SIGN DETAILS	06-30-2003
E-102A	CONSTRUCTION SIGN DETAILS	05-01-2004
E-106	TRAFFIC CONTROL - MISCELLANEOUS DETAILS	03-01-2004
E-107	DELINEATORS, BARRICADE, AND DETOURS FOR CONSTRUCTION AREAS	06-30-2003
E-108	CONSTRUCTION ZONE LONGITUDINAL DROP OFFS	06-08-2009
E-108A	CONSTRUCTION ZONE LONGITUDINAL DROP OFFS FOR PAVING	06-08-2009
E-121	STANDARD SIGN PLACEMENT - CONVENTIONAL ROAD	08-08-1995
E-134	BRIDGE NUMBER PLAQUE	08-08-1995
E-136B	STATE ROUTE MARKER SIGN DETAILS	08-08-1995
E-141	REGULATORY SIGN DETAILS	09-20-1995
E-164	SQUARE STEEL SIGN POST	06-08-2009
E-193	PAVEMENT MARKING DETAILS	08-18-1995
G-1B	BOX BEAM GUARD RAIL	06-01-1994
G-1	STEEL BEAM GUARDRAIL WITH STEEL POSTS	01-03-2000
S-352B	BRIDGE RAILING, GALVANIZED STEEL TUBING/CONCRETE COMBINATION	08-22-2012
S-352C	BRIDGE RAILING, GALVANIZED STEEL TUBING/CONCRETE COMBINATION	08-22-2012

STRUCTURES DETAILS

SD-501.00	CONCRETE DETAILS AND NOTES	02-09-2012
SD-502.00	CONCRETE DETAILS AND NOTES	10-10-2012
SD-516.10	BRIDGE JOINT ASPHALTIC PLUG	08-29-2011

TRAFFIC DATA

YEAR	ADT	DHV	% D	% T	ADTT
2014	1900	250	55	6.6	95
2034	2000	260	55	10	150

20 year ESAL for flexible pavement from 2014 to 2034 : 417000
40 year ESAL for flexible pavement from 2014 to 2054 : 953000
Design Speed : 25 mph

AS BUILT "REBAR" DETAILS

LEVEL I	LEVEL II	LEVEL III
TYPE:	TYPE:	TYPE:
GRADE:	GRADE:	GRADE:

FINAL HYDRAULIC REPORT

HYDROLOGIC DATA

Date: July 2012

DRAINAGE AREA : 44.4 sq. mi.
CHARACTER OF TERRAIN : Hilly to mountainous
STREAM CHARACTERISTICS : Ledge gorge through the bridge
NATURE OF STREAMBED : Ledge, some boulders

PEAK FLOW DATA

Q 2.33 =	1900 cfs	Q 50 =	4720 cfs
Q 10 =	3250 cfs	Q 100 =	5500 cfs
Q 25 =	4100 cfs	Q 500 =	7000 cfs

DATE OF FLOOD OF RECORD : November 1927
ESTIMATED DISCHARGE: Unknown
WATER SURFACE ELEV.: Unknown
NATURAL STREAM VELOCITY : @ Q50 = 15.4 fps
ICE CONDITIONS : Moderate
DEBRIS: Moderate
DOES THE STREAM REACH MAXIMUM HIGHWATER ELEV. RAPIDLY? Yes
IS ORDINARY RISE RAPID? Yes
IS STAGE AFFECTED BY UPSTREAM OR DOWNSTREAM CONDITIONS? No
IF YES, DESCRIBE:

WATERSHED STORAGE: <1%
HEADWATERS:
UNIFORM: X
IMMEDIATELY ABOVE SITE:

EXISTING STRUCTURE INFORMATION

STRUCTURE TYPE: Concrete arch
YEAR BUILT: 1924
CLEAR SPAN(NORMAL TO STREAM): 42'
VERTICAL CLEARANCE ABOVE STREAMBED: 36'
WATERWAY OF FULL OPENING: approximately 980 sq. ft.
DISPOSITION OF STRUCTURE: Remove and replace
TYPE OF MATERIAL UNDER SUBSTRUCTURE: Ledge

WATER SURFACE ELEVATIONS AT:

Q2.33 =	502.6'	VELOCITY =	9.5 fps
Q10 =	505.6'	"	11.8 fps
Q25 =	507.2'	"	14.4 fps
Q50 =	508.5'	"	15.4 fps
Q100 =	509.8'	"	16.1 fps

LONG TERM STREAMBED CHANGES: There is an 8' deep scour hole through the bridge area. No significant changes are anticipated in the future, due to ledge.

IS THE ROADWAY OVERTOPPED BELOW Q100: No
FREQUENCY: Above Q100
RELIEF ELEVATION: 530.2'
DISCHARGE OVER ROAD @Q100: None

UPSTREAM STRUCTURE

TOWN:	Ripton	DISTANCE:	13,200 feet
HIGHWAY # :	VT 152	STRUCTURE #:	14
CLEAR SPAN:	40'	CLEAR HEIGHT:	12'
YEAR BUILT:	1978	FULL WATERWAY:	480 sq. ft.
STRUCTURE TYPE:	Twin cell reinforced concrete box		

DOWNSTREAM STRUCTURE

TOWN:	Middlebury	DISTANCE:	1584 feet
HIGHWAY # :	T.H. 23	STRUCTURE #:	21
CLEAR SPAN:	43'	CLEAR HEIGHT:	12'
YEAR BUILT:	1927	FULL WATERWAY:	550 sq. ft.
STRUCTURE TYPE:	Single span steel pony truss bridge		

LRFR LOAD RATING FACTORS

LOADING LEVELS	TRUCK						
	H-20	HL-93	3S2	6 AXLE	3A. STR.	4A. STR.	5A. SEMI
TONNAGE	20	36	36	66	30	34.5	38
INVENTORY	2.01	1.06					
POSTING							
OPERATING	2.81	1.49	1.42	0.89	1.14	1.03	1.17
COMMENTS:							

VHB Vanasse Hangen Brustlin, Inc.

PROPOSED STRUCTURE

STRUCTURE TYPE: New single span prestressed/precast concrete bridge

CLEAR SPAN(NORMAL TO STREAM): 46'
VERTICAL CLEARANCE ABOVE STREAMBED: 40'
WATERWAY OF FULL OPENING: approximately 1125 sq. ft.

WATER SURFACE ELEVATIONS AT:

Q2.33 =	502.6'	VELOCITY=	9.5 fps
Q10 =	505.6'	"	11.8 fps
Q25 =	507.2'	"	14.4 fps
Q50 =	508.5'	"	15.4 fps
Q100 =	509.8'	"	16.1 fps

IS THE ROADWAY OVERTOPPED BELOW Q100: No
FREQUENCY: Above Q100
RELIEF ELEVATION: 531.0'
DISCHARGE OVER ROAD @Q100: None

AVERAGE LOW ELEVATION OF SUPERSTRUCTURE: 530.5'
VERTICAL CLEARANCE: @ Q50 = 22'

SCOUR: The bridge completely spans a natural ledge gorge. No significant scour is anticipated.
REQUIRED CHANNEL PROTECTION: Type II Stone Fill above Q100

PERMIT INFORMATION

		DEPTH OR ELEVATION:
AVERAGE DAILY FLOW:	92 cfs	
ORDINARY LOW WATER:	42 cfs	Elev. 497'
ORDINARY HIGH WATER:	816 cfs	Elev. 500'

TEMPORARY BRIDGE REQUIREMENTS

STRUCTURE TYPE: No temporary bridge required.
CLEAR SPAN (NORMAL TO STREAM): N/A
VERTICAL CLEARANCE ABOVE STREAMBED: N/A
WATERWAY AREA OF FULL OPENING: N/A

ADDITIONAL INFORMATION

TRAFFIC MAINTENANCE NOTES

1. MAINTAIN TRAFFIC ON AN OFF SITE DETOUR.
2. TRAFFIC SIGNALS ARE NOT NECESSARY.
3. SIDEWALKS ARE NOT NECESSARY
4. ACCESS TO NORTH BRANCH RD SHALL BE MAINTAINED

DESIGN VALUES

1. DESIGN LIVE LOAD		HL-93
2. FUTURE PAVEMENT	d_p:	0.0 INCH
3. DESIGN SPAN	L:	61'-6" FT
4. MIN. MID-SPAN POS. CAMBER @ RELEASE (PRESTRESSED UNITS)	Δ:	2.75 INCH
5. PRESTRESSING STRAND (0.60 INCH DIAMETER - LOW RELAX)	f_y:	270 KSI
6. PRESTRESSED CONCRETE STRENGTH	f'_c:	10 KSI
7. PRESTRESSED CONCRETE RELEASE STRENGTH	f'_{ci}:	7 KSI
8. CONCRETE, HIGH PERFORMANCE CLASS AA	f'_c:	4.0 KSI
9. CONCRETE, HIGH PERFORMANCE CLASS A	f'_c:	4.0 KSI
10. CONCRETE, HIGH PERFORMANCE CLASS B	f'_c:	3.5 KSI
11. CONCRETE, CLASS C	f'_c:	- - -
12. REINFORCING STEEL	f_y:	60 KSI
13. STRUCTURAL STEEL AASHTO M270 (GALVANIZED)	f_y:	50 KSI
14. SOIL UNIT WEIGHT	γ:	0.140 KCF
15. NOMINAL BEARING RESISTANCE OF SOIL	q_n:	- - -
16. SOIL BEARING RESISTANCE FACTOR (REFER TO AASHTO LRFD)	ϕ:	- - -
17. NOMINAL BEARING RESISTANCE OF ROCK	q_n:	29.0 KSF
18. ROCK BEARING RESISTANCE FACTOR (REFER TO AASHTO LRFD)	ϕ:	0.45
19. NOMINAL AXIAL PILE RESISTANCE	q_p:	- - -
20. PILE YIELD STRENGTH ASTM A572	f_y:	- - -
21. PILE SIZE		- - -
22. EST. PILE LENGTH	L_p:	
23. PILE RESISTANCE FACTOR	ϕ:	- - -
24. LATERAL PILE DEFLECTION	Δ:	- - -
25. BASIC WIND SPEED	V_{3s}:	- - -
26. MINIMUM GROUND SNOW LOAD	p_g:	- - -
27. SEISMIC DATA PGA: - - -	S_s:	- - -
	S_1:	- - -

PROJECT NAME: **MIDDLEBURY**
PROJECT NUMBER: **RS 0174(8)**

FILE NAME:	z78f217pi.xls	PLOT DATE:	8/19/2013
PROJECT LEADER:	M.A. COLGAN	DRAWN BY:	B.J. MASSE
DESIGNED BY:	VHB	CHECKED BY:	G.S. GOODRICH
PRELIMINARY INFORMATION SHEET		SHEET 2	OF 104

VHB 57438

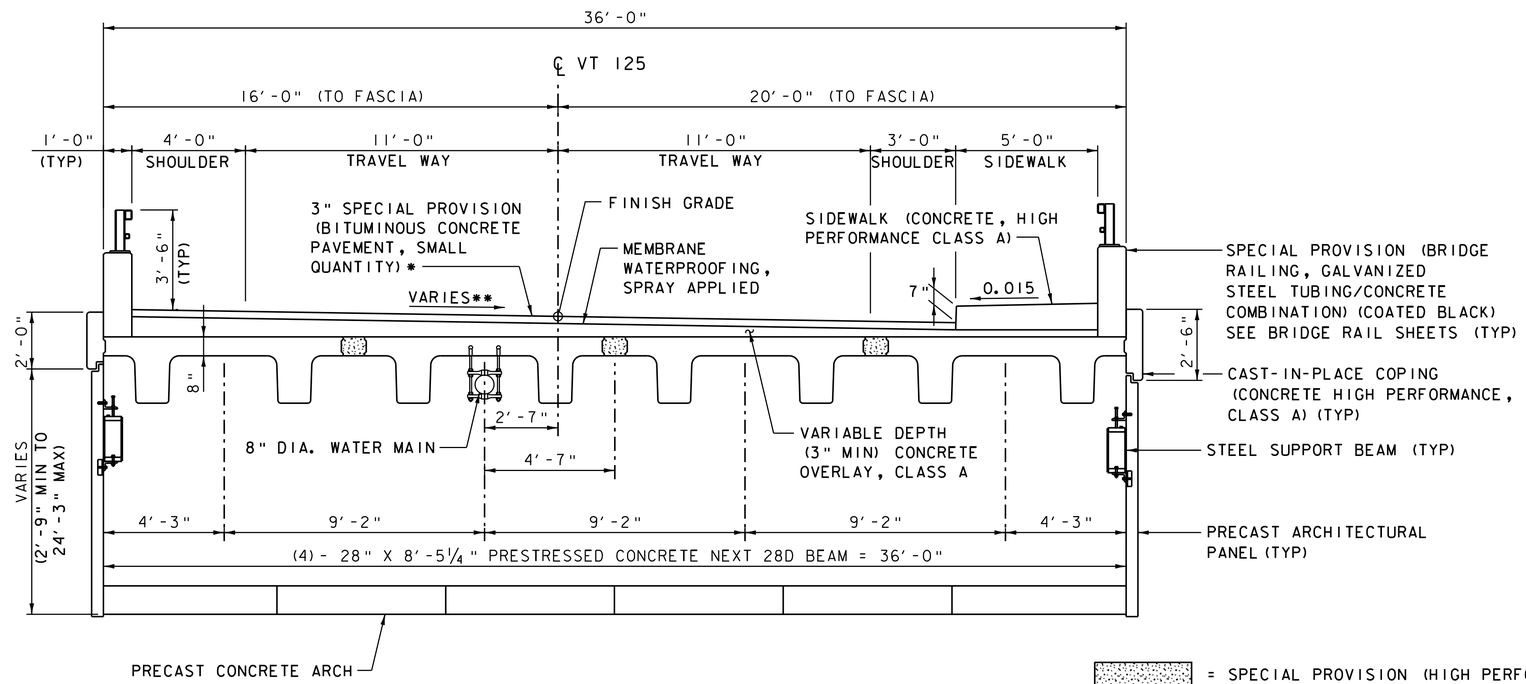

TYPICAL BRIDGE SECTION

SCALE ⅜" = 1'-0"

1 0 1 2 3 4

= SPECIAL PROVISION (HIGH PERFORMANCE CONCRETE, RAPID SET)

* (2) - LIFTS OF 1½" TYPE IVS

** CROSS SLOPE VARIES
SEE BANKING DIAGRAM ON
PROFILE AND BANKING
DIAGRAM SHEET.

Vanasse Hangen Brustlin, Inc.

PROJECT NAME: MIDDLEBURY	
PROJECT NUMBER: RS 0174(8)	
FILE NAME: z78f217typ_B.dgn	PLOT DATE: 8/27/2013
PROJECT LEADER: M.A. COLGAN	DRAWN BY: B.J. MASSE
DESIGNED BY: G.S. GOODRICH	CHECKED BY: G.S. GOODRICH
TYPICAL BRIDGE SECTION	SHEET 3 OF 104

VHB 57438

*1½" BITUMINOUS CONCRETE PAVEMENT (TYPE IVS)
1½" BITUMINOUS CONCRETE PAVEMENT (TYPE IVS)
2½" BITUMINOUS CONCRETE PAVEMENT (TYPE IIS)
2½" BITUMINOUS CONCRETE PAVEMENT (TYPE IIS)
2'-0" SUBBASE OF DENSE GRADED CRUSHED STONE
1'-0" SAND BORROW

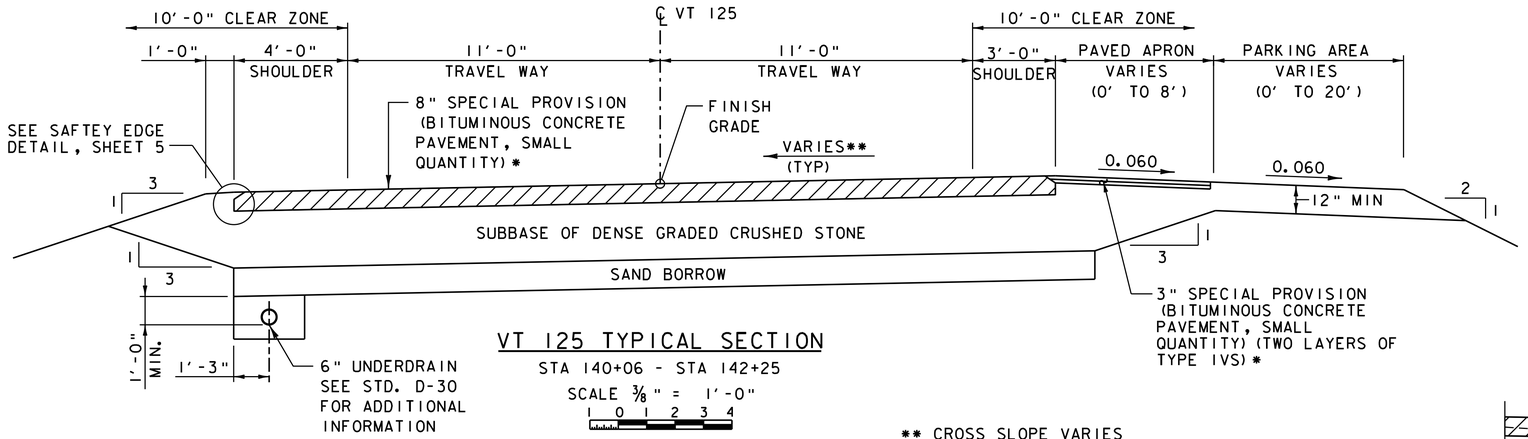

VT 125 TYPICAL SECTION

STA 140+06 - STA 142+25

SCALE ⅜" = 1'-0"

** CROSS SLOPE VARIES SEE BANKING DIAGRAM ON PROFILE AND BANKING DIAGRAM SHEET.

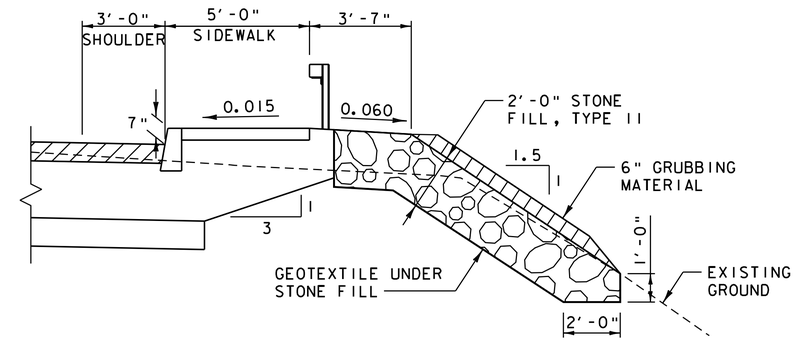

VT 125 TYPICAL 1:1.5 SLOPE SECTION

STA 138+00 - 139+00

SCALE ⅜" = 1'-0"

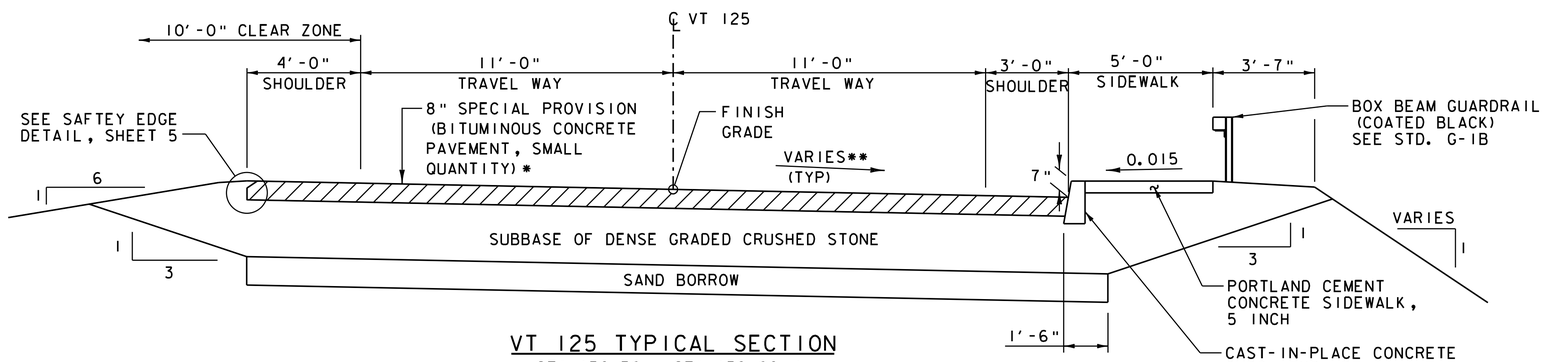

VT 125 TYPICAL SECTION

STA 136+50 - STA 139+06+/-
STA 139+73+/- - STA 139+95.50
STA 142+25 - STA 143+50

SCALE ⅜" = 1'-0"

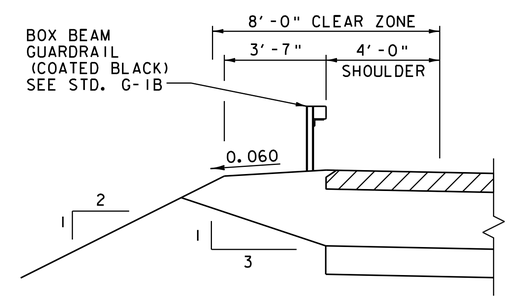

VT 125 TYPICAL GUARDRAIL SECTION

SCALE ⅜" = 1'-0"

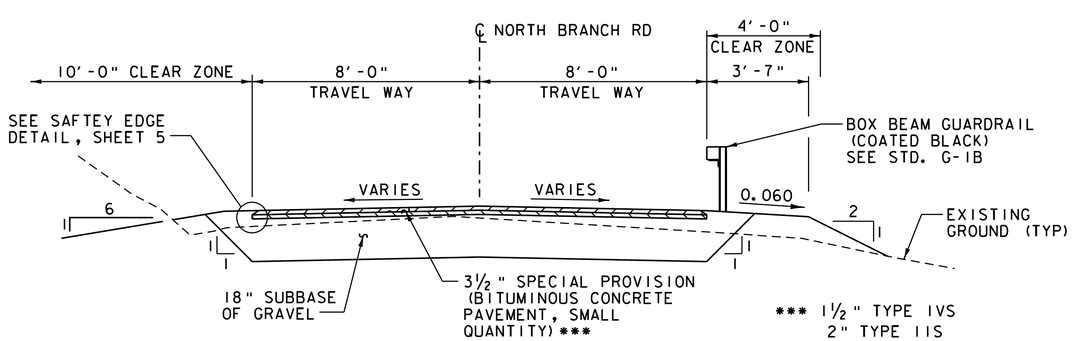

*** 1½" TYPE IVS
2" TYPE IIS

NORTH BRANCH ROAD TYPICAL SECTION

SCALE ⅜" = 1'-0"

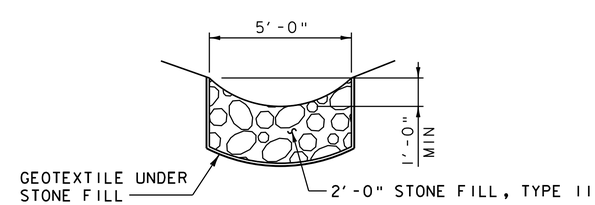

SWALE/DITCH DETAIL

STA 140+00 - 140+75 RT.
NOT TO SCALE

VHB Vanasse Hangen Brustlin, Inc.

PROJECT NAME: MIDDLEBURY	
PROJECT NUMBER: RS 0174(8)	
FILE NAME: z78f217typ_R.dgn	PLOT DATE: 8/27/2013
PROJECT LEADER: M.A. COLGAN	DRAWN BY: B.J. MASSE
DESIGNED BY: D.M. PECK	CHECKED BY: G.L. BAKOS
TYPICAL ROADWAY SECTIONS	SHEET 4 OF 104

VHB 57438

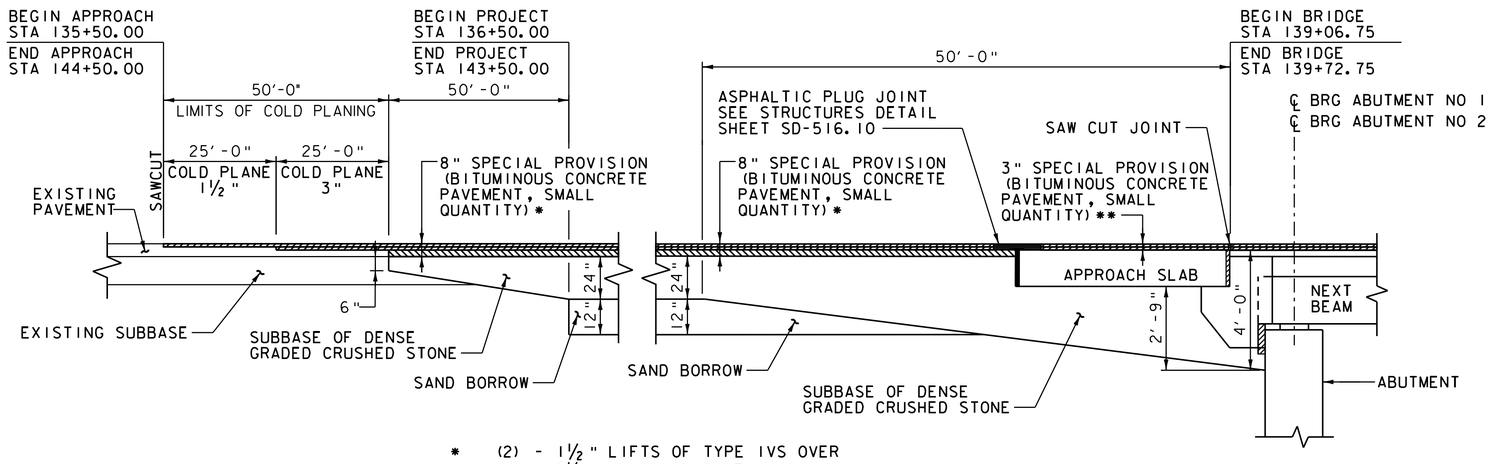

* (2) - 1½" LIFTS OF TYPE IVS OVER
(2) - 2½" LIFTS OF TYPE IIS

** (2) - 1½" LIFTS OF TYPE IVS

NOTE: EMULSIFIED ASPHALT IS TO BE APPLIED AT A RATE OF 0.040 GAL/SY BETWEEN ALL LIFTS OF BITUMINOUS CONCRETE PAVEMENT AND ON THE EXISTING PAVEMENT AND THE APPROACH SLAB PRIOR TO PLACING THE FIRST LIFT, AS DIRECTED BY THE ENGINEER.

APPROACH SECTION

NOT TO SCALE

GENERAL NOTES

SEED: TO BE APPLIED PER SEEDING FORMULAS OR AS DIRECTED BY THE ENGINEER.

FERTILIZER: FORMULA 10-20-10, TO BE USED WITH SEED, APPLIED AT THE RATE OF 500 LBS./ACRE. (HYDRO SEEDERS MAY USE 19-19-19 FORMULA).

AGRICULTURAL LIMESTONE: TO BE APPLIED AT THE RATE OF 2 TONS/ACRE, OR AS DIRECTED BY THE ENGINEER.

MARKER POSTS: TO BE PLACED AS INDICATED OR AS DIRECTED BY THE ENGINEER.

SLOPE ROUNDING: ALL CUT SLOPES TO BE ROUNDED IN ACCORDANCE WITH STANDARD SHEET B - 5.

MATERIAL TOLERANCES

(IF USED ON PROJECT)

SURFACE	
- PAVEMENT (TOTAL THICKNESS)	+/- ¼"
- AGGREGATE SURFACE COURSE	+/- ½"
SUBBASE	+/- 1"
SAND BORROW	+/- 1"

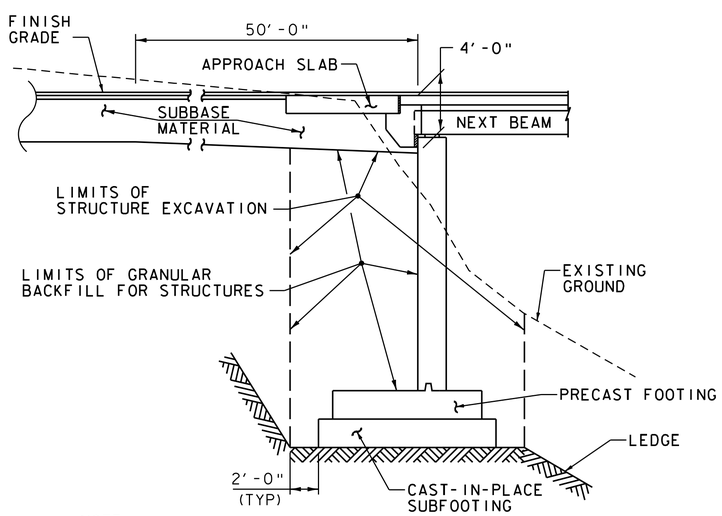

NOTE:

ACTUAL STRUCTURE EXCAVATION LIMITS SHALL BE DETERMINED BY THE CONTRACTOR. HOWEVER, ONLY THE EXCAVATION BETWEEN THE LIMITS SHOWN FOR STRUCTURE EXCAVATION WILL BE PAID FOR UNDER ITEM 204.25 "STRUCTURE EXCAVATION". EXCAVATION OUTSIDE OF THESE LIMITS WILL BE AT THE EXPENSE OF THE CONTRACTOR.

ABUTMENT EARTHWORK SECTION

NOT TO SCALE

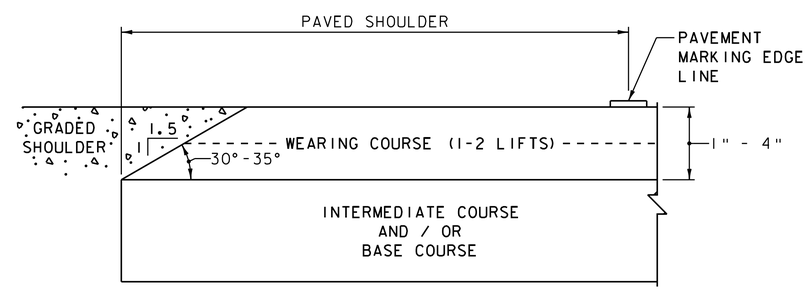

NOTE: COST FOR FORMING AND COMPACTING SAFETY EDGE SHALL BE INCIDENTAL TO SPECIAL PROVISION (BITUMINOUS CONCRETE PAVEMENT, SMALL QUANTITY). LEVELING COURSE MAY INCLUDE THE "SAFETY EDGE" AT THE CONTRACTOR'S CHOICE.

SAFETY EDGE DETAIL

NOT TO SCALE

Vanasse Hangen Brustlin, Inc.

PROJECT NAME: MIDDLEBURY	
PROJECT NUMBER: RS 0174(8)	
FILE NAME: z78f217typ_R.dgn	PLOT DATE: 8/27/2013
PROJECT LEADER: M.A. COLGAN	DRAWN BY: C.L. CILLEY
DESIGNED BY: C.L. CILLEY	CHECKED BY: G.L. BAKOS
TYPICAL EARTHWORK SECTIONS	SHEET 5 OF 104

GENERAL

1. ALL MATERIALS AND CONSTRUCTION SHALL CONFORM TO THE STATE OF VERMONT AGENCY OF TRANSPORTATION STANDARD SPECIFICATIONS FOR CONSTRUCTION, DATED 2011, AND ITS LATEST REVISIONS, AND THE AASHTO LRFD BRIDGE DESIGN SPECIFICATIONS, 6TH EDITION, AND ITS LATEST REVISIONS.

2. ALL PRECAST CONCRETE ELEMENTS TO BE FABRICATED TO THE SPECIFIED DIMENSIONS WITHIN THE TOLERANCES DICTATED IN THE PRECAST/PRESTRESSED CONCRETE INSTITUTE TOLERANCE MANUAL FOR PRECAST AND PRESTRESSED CONCRETE CONSTRUCTION, MNL 135-00, AND ITS LATEST REVISIONS.

3. ALL DIMENSIONS ARE HORIZONTAL OR VERTICAL, AND ARE GIVEN AT 68 DEGREES FAHRENHEIT, UNLESS NOTED OTHERWISE.

4. THE BRIDGE IS DESIGNED FOR HL-93 LIVE LOAD.

5. ITEM 529.15 "REMOVAL OF STRUCTURE" IS FOR THE COMPLETE REMOVAL AND DISPOSAL OF THE EXISTING BRIDGE SUBSTRUCTURE AND SUPERSTRUCTURE, INCLUDING ALL BRIDGE RAIL WHERE THE REMOVAL IS OUTSIDE OF THE AREAS COVERED BY ANY OF THE EXCAVATION ITEMS.

6. NO SUBSTITUTION FOR PRECAST CONCRETE WILL BE PERMITTED.

7. PLACE TWO FREE-STANDING CONTRACTOR GRADE 30-FOOT FIBERGLASS EXTENSION LADDERS INSIDE THE ARCH, ONE AT EACH ABUTMENT, TO FACILITATE FUTURE MAINTENANCE AND INSPECTIONS. COST TO BE INCLUDED IN ALL CONTRACT PAY ITEMS. LADDERS ARE IN ADDITION TO THE INSPECTION RUNGS INCLUDED IN THE PRECAST ARCH.

TRAFFIC CONTROL

8. THE CONTRACTOR SHALL IMPLEMENT THE ROAD CLOSURE, TRAFFIC CONTROL, AND DETOUR AS SHOWN ON THE PLANS.

9. THE CONTRACTOR SHALL NOTIFY THE TOWN A MINIMUM OF TWO (2) WEEKS PRIOR TO CLOSING THE ROAD.

10. FULL ACCESS TO ALL SIDE ROADS AND DRIVES WITHIN THE PROJECT LIMITS SHALL BE MAINTAINED AT ALL TIMES.

11. UNLESS COVERED UNDER INDIVIDUAL PAY ITEMS OR NOTED OTHERWISE, ALL COSTS FOR WORK SHOWN ON THE TRAFFIC CONTROL SHEETS AND FOR TEMPORARY TRAFFIC CONTROL DEVICES WILL BE CONSIDERED TO BE INCLUDED IN THE CONTRACT LUMP SUM PRICE FOR ITEM 641.10, "TRAFFIC CONTROL". THIS INCLUDES, BUT IS NOT LIMITED TO, THE FOLLOWING ITEMS:

    TEMPORARY TRAFFIC BARRIERS
    RETROREFLECTIVE DRUMS
    SIGNS
    SIGN POSTS AND STANDS

12. TEMPORARY TRAFFIC BARRIER SHALL BE FURNISHED IN ACCORDANCE WITH SECTION 621.

13. ALL SIGNS SHALL BE IN ACCORDANCE WITH THE CURRENT EDITIONS OF THE "MANUAL ON UNIFORM TRAFFIC CONTROL DEVICES" (MUTCD) AND THE "STANDARD HIGHWAY SIGNS AND MARKINGS" BOOK (SHSM) PUBLISHED BY THE FEDERAL HIGHWAY ADMINISTRATION (FHWA).

EARTHWORK

14. THE CONTRACTOR'S ATTENTION IS DIRECTED TO SUBSECTION 301.06 REGARDING THE COMPACTION OF THE SUBBASE MATERIAL.

STRUCTURAL STEEL

15. ALL STRUCTURAL STEEL PAID UNDER ITEM 506.60, "STRUCTURAL STEEL (FPQ)" SHALL CONFORM TO AASHTO M270M/M270 GRADE 50 AND SHALL BE GALVANIZED.

16. ALL STRUCTURAL STEEL SHALL BE DETAILED AND FABRICATED USING PROCEDURES AND TOLERANCES IN ACCORDANCE WITH APPLICABLE PUBLICATIONS OF THE AMERICAN INSTITUTE OF STEEL CONSTRUCTION (AISC).

17. ALL MEMBERS MARKED (CVN) MUST MEET THE CHARPY V-NOTCH TESTING REQUIREMENTS AS INDICATED IN SUBSECTION 714.01.

18. ALL FIELD CONNECTIONS SHALL BE MADE WITH 3/4" DIAMETER HIGH-STRENGTH BOLTS IN 13/16" DIAMETER HOLES, PER SECTION 506.

19. ALL WELDING SHALL CONFORM TO THE PROVISIONS OF SUBSECTION 506.10.

20. ANY CONNECTIONS THAT ARE NOT DETAILED ON THE PLANS SHALL BE DETAILED BY THE FABRICATOR AND SUBMITTED TO THE STRUCTURES ENGINEER FOR APPROVAL.

21. SUPPORT BEAM ENDS SHALL BE VERTICAL UNDER FULL DEAD LOAD DEFLECTION.

22. THE FAYING SURFACES ON THE CONNECTION PLATES SHALL BE PREPARED AS CLASS "B". THESE SURFACES SHALL BE PROTECTED FROM DAMAGE AND CORROSION PRIOR TO THE CONNECTION.

CONCRETE

23. ALL PRECAST SUBSTRUCTURE, APPROACH SLAB, ARCH, AND ARCHITECTURAL PANEL CONCRETE SHALL MEET THE REQUIREMENTS OF SECTION 540 - PRECAST CONCRETE.

24. THE CONNECTION BETWEEN APPROACH SLAB UNITS SHALL MEET THE REQUIREMENTS OF ITEM 900.608, "SPECIAL PROVISION (HIGH PERFORMANCE CONCRETE RAPID SET) (FPQ)".

25. CONCRETE FOR THE BRIDGE DECK OVERLAY, SIDEWALK ON BRIDGE, COPING, AND ARCHITECTURAL PANEL CLOSURE POURS SHALL BE ITEM 501.33, "CONCRETE, HIGH PERFORMANCE CLASS A (FPQ)".

26. ALL OTHER CAST-IN-PLACE SUBSTRUCTURE CONCRETE, INCLUDING SUBFOOTING, SHALL BE ITEM 501.34, "CONCRETE, HIGH PERFORMANCE CLASS B" UNLESS OTHERWISE NOTED.

27. THE OVERLAY IS TO BE POURED IN ONE CONTINUOUS POUR WITH A MAXIMUM DURATION OF EIGHT HOURS. IF CIRCUMSTANCES BEYOND THE CONTRACTOR'S CONTROL PREVENT THIS FROM BEING ACCOMPLISHED, A TRANSVERSE CONSTRUCTION JOINT SHALL BE USED BETWEEN ADJACENT POURS. A MINIMUM 96 HOUR DELAY BETWEEN ADJACENT POURS SHALL BE OBSERVED.

28. RELATIVE TO GRADE, ALL SUPERSTRUCTURE RELATED POURS SHALL BEGIN FROM THE LOW ELEVATION END AND PROCEED TOWARDS THE HIGH ELEVATION END.

29. ALL EXPOSED EDGES OF CONCRETE SHALL BE CHAMFERED 1 INCH X 1 INCH UNLESS OTHERWISE NOTED.

30. ITEM 514.10, "WATER REPELLENT, SILANE", SHALL BE APPLIED TO ALL EXPOSED CONCRETE ON THE BRIDGE SUPERSTRUCTURE AND SUBSTRUCTURE EXCEPT THE UNDERSIDE OF THE NEXT BEAMS AND THE PRECAST ARCH.

31. JOINTS AND SCORE MARKS IN CONCRETE SHALL BE CONSTRUCTED AS INDICATED ON THE PLANS OR AS DIRECTED BY THE RESIDENT ENGINEER.

32. THE KEY IN CONCRETE CONSTRUCTION JOINTS SHALL BE MONOLITHIC AND CONTINUOUS FOR THE FULL LENGTH OF THE JOINT.

33. MINIMUM COVER FOR REINFORCING STEEL SHALL BE 2" ALONG THE BACK FACES OF WALLS AGAINST EARTH, 1½" ALONG THE BOTTOM SURFACE OF NEXT BEAM FLANGE AND 3" ELSEWHERE, UNLESS OTHERWISE NOTED.

34. ALL REINFORCING STEEL SHALL BE DETAILED AND FABRICATED USING PROCEDURES AND TOLERANCES IN ACCORDANCE WITH APPLICABLE PUBLICATIONS OF THE CONCRETE REINFORCING STEEL INSTITUTE (CRSI).

35. EXPOSED FACES OF CAST-IN-PLACE PORTIONS OF WINGWALLS SHALL HAVE AN AESTHETIC FINISH IN ACCORDANCE WITH SECTION 501.

CONCRETE CONTINUED

36. REINFORCING STEEL IN THE OVERLAY, SIDEWALK ON BRIDGE, PARAPETS, COPING, AND CAST-IN-PLACE SECTIONS OF WINGWALLS AND CURTAIN WALLS SHALL BE PAID UNDER ITEM 507.12 REINFORCING STEEL, LEVEL II. REINFORCING STEEL IN THE PRECAST SECTIONS OF WINGWALLS, ARCHITECTURAL PANELS, AND NEXT BEAMS SHALL MEET THE REQUIREMENTS OF SECTION 507 FOR LEVEL II REINFORCING STEEL AND WILL BE PAID UNDER THE APPROPRIATE CONCRETE ITEM. ALL REINFORCING STEEL IN THE PRECAST ABUTMENT STEMS, FOOTINGS, ARCH, AND APPROACH SLABS SHALL MEET THE REQUIREMENTS OF SECTION 507 FOR LEVEL I REINFORCING STEEL AND WILL BE PAID UNDER THE APPROPRIATE SECTION 540 CONTRACT ITEM.

37. CUTTING AND REPAIRING DAMAGED AREAS OF COATED REINFORCING STEEL SHALL BE PERFORMED IN ACCORDANCE WITH SUBSECTION 507.04 OF THE STANDARD SPECIFICATIONS.

SUBSTRUCTURE ON LEDGE

38. FOOTINGS AND SUB-FOOTINGS SHALL BE FOUNDED ON LEDGE WHICH HAS BEEN CLEANED OF ALL LOOSE ROCK AND DEBRIS TO ENSURE THAT SUBSTRUCTURES ARE PLACED ON COMPETENT ROCK.

39. UPON COMPLETION OF THE EXCAVATION FOR SUBSTRUCTURES FOUNDED ON BEDROCK AND PRIOR TO PLACING FORMWORK, THE RESIDENT ENGINEER SHALL NOTIFY THE PROJECT MANAGER AND THE VTRANS GEOLOGIST. THE GEOLOGIST WILL DETERMINE IF THE BEDROCK IS STABLE AND COMPETENT TO OBTAIN THE REQUIRED NOMINAL BEARING RESISTANCE. THE CONTRACTOR SHALL NOTIFY THE GEOLOGIST 48 HOURS PRIOR TO WHEN THE ANALYSIS WILL BE NEEDED.

40. LEDGE THAT IS EXCAVATED FOR PLACEMENT OF FOOTINGS SHALL BE EXCAVATED TO PROVIDE A LEVEL SURFACE OR AS DIRECTED BY THE RESIDENT ENGINEER.

41. THE SUBSTRUCTURE UNITS HAVE BEEN DESIGNED FOR THE TOP OF FOOTING ELEVATIONS SHOWN ON THE PLANS. LEDGE SHALL BE EXCAVATED DOWN TO THE INDICATED BOTTOM OF FOOTING, INCLUDING 3" MIN GROUT BED, FOR THE FULL WIDTH (TOE TO HEEL) OF THE CONFIGURATION. IF THE LEDGE ELEVATION IS GREATER THAN 6" BELOW THE DESIGN BOTTOM OF FOOTING, A SUBFOOTING SHALL BE POURED SO THAT THE DESIGN TOP OF FOOTING IS AT THE REQUIRED ELEVATION. GROUT BED WILL BE PAID UNDER THE APPROPRIATE SECTION 540 CONTRACT ITEM. SUBFOOTINGS, IF REQUIRED, SHALL BE PAID UNDER ITEM 501.34, "CONCRETE, HIGH PERFORMANCE CLASS B".

42. THE LIMITS OF THE SUBFOOTING (IF REQUIRED) SHALL BE 1'-0" OUTSIDE THE LIMITS OF THE FOOTING OR AS DIRECTED BY THE RESIDENT ENGINEER.

43. SEE SECTIONS 203 AND 205 AND DRILLING AND BLASTING SPECIAL PROVISION FOR ADDITIONAL INFORMATION.

VHB Vanasse Hangen Brustlin, Inc.

PROJECT NAME: MIDDLEBURY	
PROJECT NUMBER: RS 0174(8)	
FILE NAME: z78f217pn.dgn	PLOT DATE: 9/6/2013
PROJECT LEADER: M.A. COLGAN	DRAWN BY: B.J. MASSE
DESIGNED BY: G.S. GOODRICH	CHECKED BY: S.E. BURBANK
PROJECT NOTES (1 OF 3)	SHEET 6 OF 104

PRECAST ABUTMENT

44. ABUTMENT STEMS SHALL BE PRECAST AND CONSTRUCTED WITH PRECAST CONCRETE FOOTINGS. ALL COST SHALL BE INCLUDED IN THE APPROPRIATE PRECAST CONCRETE ITEM. THIS SHALL INCLUDE ALL WORK NECESSARY TO FABRICATE, DELIVER, AND ASSEMBLE EACH UNIT COMPLETE AND IN-PLACE AS SHOWN ON THE PLANS. ALL APPURTENANCES SHALL BE INCIDENTAL.

45. THESE PLANS INCLUDE DETAILS AND GENERAL LAYOUT INFORMATION FOR PRECAST ABUTMENT STEMS, WINGWALLS, FOOTINGS, ARCH, AND ARCHITECTURAL PANELS. THE CONTRACTOR MAY INCLUDE ALTERNATIVE DETAILS AND JOINT LOCATIONS FOR APPROVAL AS PART OF THE FABRICATION DRAWING SUBMITTAL PROVIDED THE MODIFICATIONS ARE CONSISTENT WITH THE DESIGN DETERMINED BY THE ENGINEER. IF THE MODIFICATIONS ARE NOT CONSISTENT WITH THE DESIGN, THE CONTRACTOR SHALL SUBMIT ALL NECESSARY CALCULATIONS AND DRAWINGS CONSISTENT WITH THE MODIFICATIONS THAT ARE STAMPED BY A PROFESSIONAL ENGINEER LICENSED IN THE STATE OF VERMONT.

46. ALL COSTS FOR GROUTING MATERIALS USED IN PRECAST MEMBERS SHALL BE INCIDENTAL TO THE APPROPRIATE PRECAST CONCRETE PAY ITEM UNLESS OTHERWISE NOTED.

47. THE CONTRACTOR IS RESPONSIBLE FOR PROPER FIT-UP OF THE PRECAST AND CAST-IN-PLACE ELEMENTS, PER THE FABRICATOR'S RECOMMENDATIONS, APPROVED FABRICATION AND ENGINEERING DRAWINGS, AND TO THE SATISFACTION OF THE ENGINEER.

48. TEMPORARY SUPPORTS SHALL BE REQUIRED IF THE STRUCTURE IS BACKFILLED PRIOR TO ACHIEVING FULL MOMENT CAPACITY BETWEEN ALL CONNECTED ELEMENTS. ALL DETAILS SHALL BE INCLUDED IN THE FABRICATION DRAWINGS AND ERECTION PLAN.

49. MECHANICAL GROUTED SPLICES SHALL BE USED TO PROVIDE MOMENT CONNECTIONS BETWEEN MEMBERS AS SHOWN IN THE PLANS. GROUTED SPLICES SHALL DEVELOP A MINIMUM OF 125% OF THE SPECIFIED YIELD STRENGTH OF THE REINFORCING BAR BEING SPLICED. ALL COSTS FOR THE GROUTED SPLICES SHALL BE INCLUDED IN THE APPROPRIATE PRECAST CONCRETE PAY ITEM.

50. VERTICAL JOINTS BETWEEN ABUTMENT STEMS, WINGWALLS, AND FOOTINGS SHALL BE STAGGERED A MINIMUM OF SIX INCHES. ALL JOINT DETAILS SHALL BE SHOWN ON THE FABRICATION DRAWINGS.

51. NO VERTICAL JOINTS SHALL BE ALLOWED WITHIN 1'-0" FROM THE EDGE OF ANY BEARING DEVICE OF THE SUPERSTRUCTURE.

52. BARRIER MEMBRANE, IN ACCORDANCE WITH SECTION 540, SHALL BE PLACED ALONG THE FAR FACE OF THE VERTICAL JOINTS IN ABUTMENT STEMS AND WINGWALLS. ALL COST SHALL BE INCLUDED IN THE APPROPRIATE PRECAST CONCRETE PAY ITEM.

53. GALVANIZE ANCHOR ASSEMBLIES AFTER FABRICATION IN ACCORDANCE WITH ASSHTO M232M/M232.

54. CONCRETE SHALL HAVE A MINIMUM 28 DAY COMPRESSIVE STRENGTH OF fc = 5,000 PSI.

55. EXPOSED FACES OF WINGWALLS SHALL HAVE AN AESTHETIC FINISH IN ACCORDANCE WITH SECTION 501.

56. SURFACES OF BRIDGE SEATS UNDER BEARING DEVICES SHALL BE LEVEL. THE ENTIRE BRIDGE SEAT SURFACE SHALL BE SMOOTHED WITH A MAGNESIUM FLOAT.

PRECAST ARCH

57. THE PRECAST ARCH AND CAST-IN-PLACE CROWN BEAM SYSTEM SHALL BE COMPATIBLE WITH THE REQUIREMENTS OF THIS SPECIFIC PROJECT, INCLUDING BUT NOT LIMITED TO GEOMETRICS, AESTHETICS, AND COMPATIBILITY WITHIN THE CONFINEMENTS OF THE NEXT BEAM SUPERSTRUCTURE AND SUBSTRUCTURE WITH APPURTENANCES, INCLUDING THE WATERLINE, PRECAST ARCHITECTURAL PANELS, AND PANEL SUPPORT BEAM. THE PRECAST ARCH SYSTEM PROPOSED BY THE CONTRACTOR SHALL BE SUBMITTED TO VTRANS FOR APPROVAL. NO DEVIATIONS FROM THE GEOMETRIC LAYOUT OF THE ARCH ARE ALLOWED.

58. THE CENTERLINE OF FOOTING IS BASED ON A 1'-0" THICK PRECAST ARCH AND IS CALCULATED FROM THE INSIDE FACE OF THE ARCH, WHICH IS THE CONTROL, AT THE TOP OF FOOTING ELEVATION. IF, BASED ON THE MANUFACTURER'S DESIGN, THE ARCH THICKNESS IS OTHER THAN 1'-0", THE CENTERLINE OF FOOTING SHALL BE REPOSITIONED AS NEEDED TO PLACE THE CENTER OF THE FOOTING DIRECTLY UNDER THE CENTER OF THE PRECAST ARCH WALL AS CALCULATED AT THE TOP OF FOOTING.

59. THE PRECAST ARCH SHALL BE DESIGNED FOR SELF-WEIGHT DEAD LOAD OF THE ARCH ONLY, AND SHALL NOT BEAR ANY VERTICAL LIVE LOADS OR DEAD LOADS FROM THE ABOVE NEXT BEAM SUPERSTRUCTURE OR PRECAST ARCHITECTURAL FACE PANELS OR APPURTENANCES. THE CAST-IN-PLACE ARCH FOOTINGS HAVE BEEN DESIGNED FOR THE FOLLOWING LOADS:

PRECAST ARCH DEAD LOAD = 4.5 KIPS/FOOT (VERTICAL)
HORIZONTAL THRUST FROM ARCH DEAD LOAD = 1.75 KIPS/FOOT

60. THE CONTRACTOR IS RESPONSIBLE FOR PROPER FIT-UP OF THE PRECAST AND CAST-IN-PLACE ELEMENTS, PER THE FABRICATOR'S RECOMMENDATIONS, APPROVED FABRICATION AND ENGINEERING DRAWINGS, AND TO THE SATISFACTION OF THE ENGINEER.

61. PRECAST ARCH AND COMPONENTS SHALL BE DESIGNED BY THE FABRICATOR AND DESIGN CALCULATIONS SUBMITTED WITH THE FABRICATION DRAWINGS STAMPED BY A PROFESSIONAL ENGINEER LICENSED IN THE STATE OF VERMONT.

62. ARCH-TO-FOOTING CONNECTION TO BE CONFIGURED AND GROUTED PER MANUFACTURER'S RECOMMENDATION.

63. SEE PRECAST ARCHITECTURAL FACE PANELS FOR ADDITIONAL DETAILS AND INFORMATION.

64. INSPECTION RUNGS SHALL BE CAST INTO THE ARCH AT LOCATIONS SHOWN ON THE PLANS. SEE VTRANS STD. D-15 FOR RUNG DIMENSIONS AND INFORMATION. ALL COSTS FOR RUNGS SHALL BE INCLUDED IN ITEM 540.10, "PRECAST CONCRETE STRUCTURE (ARCH)".

ARCH LIGHTING

65. LIGHTING SHALL BE PROVIDED BETWEEN THE ARCH AND NEXT BEAM SUPERSTRUCTURE TO FACILITATE ACCESS AND SAFE PASSAGE INSIDE OF THE ARCH DURING FUTURE MAINTENANCE AND INSPECTION. ALL COSTS FOR WORK ASSOCIATED WITH LIGHTING, INCLUDING, BUT NOT LIMITED TO, LUMINAIRES, LIGHTING ENCLOSURES, CONDUIT, WIRING, JUNCTION BOXES, AND RECEPTACLES SHALL BE PAID FOR UNDER ITEM 900.645 SPECIAL PROVISION (ARCH LIGHTING).

PRECAST ARCHITECTURAL PANEL

66. THE CONSTRUCTION AND ASSEMBLY OF THE PRECAST ARCHITECTURAL PANELS SHALL BE IN ACCORDANCE WITH SECTION 540. HANDLING AND INSTALLATION SHALL BE IN ACCORDANCE WITH THE FABRICATOR'S RECOMMENDATIONS.

67. ALTERNATIVE PANEL JOINT LAYOUT MAY BE PROPOSED BY THE PANEL FABRICATOR TO FACILITATE HANDLING AND ERECTION. JOINT SYMMETRY SHALL BE MAINTAINED AT EACH FASCIA TO ENSURE ACCEPTABLE AESTHETICS OF THE ASSEMBLED STRUCTURE. FINAL JOINT LAYOUT IS SUBJECT TO VTRANS APPROVAL. A MAXIMUM OF SIX (6) PRIMARY PANELS AND TWO (2) SECONDARY PANELS ARE ALLOWED PER FASCIA.

68. FABRICATION DRAWINGS FOR THE PRECAST ARCHITECTURAL PANELS SHALL INCLUDE A PLAN FOR SHIPPING AND ERECTING CONCRETE PANELS.

69. THE CONTRACTOR IS RESPONSIBLE FOR PROPER FIT-UP OF THE PRECAST AND ANY CAST-IN-PLACE ELEMENTS, PER THE FABRICATOR'S RECOMMENDATIONS, APPROVED FABRICATION AND ENGINEERING DRAWINGS, AND TO THE SATISFACTION OF THE ENGINEER.

70. SEE PROJECT NOTE 36 FOR REINFORCING STEEL REQUIREMENTS.

71. ATTACHMENTS, ANCHOR ASSEMBLIES, ACCESS HATCHES, AND LOUVERED VENTS SHALL BE GALVANIZED AFTER FABRICATION ACCORDING TO AASHTO M232M/M232.

72. CONCRETE FOR PRECAST ARCHITECTURAL PANELS SHALL OBTAIN A 28 DAY COMPRESSIVE STRENGTH OF f'c = 5,000 PSI.

73. TWO INSPECTION ACCESS HATCHES SHALL BE PROVIDED ON THE EAST (UPSTREAM) FASCIA, ONE AT EACH ABUTMENT AT LOCATIONS SHOWN ON THE EAST ARCHITECTURAL PANEL ELEVATION. ACCESS HATCHES SHALL BE 32" WIDE BY 48" TALL AND SHALL BE INWARD SWINGING, AND HAVE HINGED, SOLID GALVANIZED STEEL DOORS WITH LOCKING SYSTEM. INSPECTION ACCESS DOORS SHALL BE DETAILED AND SUBMITTED TO VTRANS FOR APPROVAL. COST OF INSPECTION ACCESS DOORS TO BE INCIDENTAL TO THE PRECAST ARCHITECTURAL PANELS.

74. GALVANIZED STEEL LOUVERED VENTS SHALL BE PROVIDED ON THE EAST (UPSTREAM) FASCIA AT THE LOCATIONS SHOWN ON THE EAST PRECAST ARCHITECTURAL PANEL ELEVATION. LOUVERED VENTS SHALL BE 1'-6" IN DIAMETER AND SHALL BE SURFACE MOUNTED PER MANUFACTURER'S RECOMMENDATION. INSECT SCREENS SHALL BE PROVIDED BEHIND EACH VENT TO PREVENT ACCESS OF BIRDS AND INSECTS. COSTS OF LOUVERED VENTS AND INSECT SCREEN, WITH ATTACHMENTS, SHALL BE INCIDENTAL TO THE PRECAST ARCHITECTURAL PANELS.

75. EXPOSED FACES OF ARCHITECTURAL PANELS SHALL RECEIVE AN AESTHETIC FINISH IN ACCORDANCE WITH SECTION 501.

NEXT D BEAMS

76. NEXT D BEAMS ARE A NON-PROPRIETARY SHAPE DEVELOPED BY PCI NORTHEAST ("PCINE"). STANDARDIZED SECTION PROPERTIES AND DETAILS MAY BE FOUND AT http://www.pcine.org.

77. DESIGN VALUES
    A. CONCRETE COMPRESSIVE STRENGTH: f'c = 10,000 PSI
    B. CONCRETE COMPRESSIVE STRENGTH AT RELEASE: f'ci = 7,000 PSI
    C. PRESRTESSING STRANDS: 0.6 INCH DIAMETER, 270 KSI, LOW-RELAXATION 7-WIRE STRANDS
    D. ASSUMED MODULUS OF ELASTICITY = 28,500 KSI
    E. THE JACKING FORCE PER STRAND = 47 KIPS
    F. SERVICE LOADS

MEMBER MOMENT		685 K-FT
NON-COMPOSITE SUPERIMPOSED DEAD LOAD MOMENT	(INT)	36 K-FT
	(EXT)	18 K-FT
COMPOSITE SUPERIMPOSED DEAD LOAD MOMENT		520 K-FT
LIVE LOAD AND IMPACT MOMENT	(INT)	948 K-FT
	(EXT)	1362 K-FT
DEAD LOAD REACTION	(INT)	81 KIPS
	(EXT)	80 KIPS
LIVE LOAD AND IMPACT REACTION	(INT)	87 KIPS
	(EXT)	59 KIPS
TOTAL REACTION	(INT)	168 KIPS
	(EXT)	138 KIPS
FINAL CAMBER AT ERECTION		3 1/8 INCHES

78. ENDS OF FLANGES IN CONTACT WITH GROUT SHALL BE SAND BLASTED PRIOR TO DELIVERY AND POWER WASHED WITH WATER PRIOR TO ERECTION OF THE BEAMS.

79. FILL FLANGE CONNECTION WITH HIGH PERFORMANCE RAPID SETTING CONCRETE ACCORDING TO ITEM 900.608, "SPECIAL PROVISION (HIGH PERFORMANCE CONCRETE, RAPID SET)". CONCRETE SHALL HAVE A MINIMUM 28 DAY COMPRESSIVE STRENGTH OF 7000 PSI. FLANGE CONNECTION SHALL BE PAID FOR UNDER ITEM 900.608, "SPECIAL PROVISION (HIGH PERFORMANCE CONCRETE, RAPID SET)".

80. METHOD OF FORMING FLANGE CONNECTION SHALL BE DETERMINED BY THE CONTRACTOR. THE FORMS SHALL BE REMOVABLE AND ABLE TO ACCOMMODATE DIFFERENTIAL CAMBER. FORM SUPPORTS SHALL NOT PENETRATE THROUGH THE TOP OF POUR UNLESS APPROVED BY THE ENGINEER.

81. THE FABRICATOR MAY ALTER THE DESIGN AS DETAILED IN THESE PLANS TO ACCOMMODATE THEIR SPECIFIC OPERATION. THIS ALTERATION MUST BE DESIGNED BY A PROFESSIONAL ENGINEER AND MEET THE ABOVE CRITERIA AND SHALL BE APPROVED BY THE PROJECT MANAGER.

82. NEXT BEAMS AND CURTAIN WALLS SHALL BE PAID FOR AS ITEM 900.640 SPECIAL PROVISION (PRESTRESSED CONCRETE NEXT D BEAMS) (NEXT 28 D). CAST-IN-PLACE CONCRETE PARAPETS SHALL BE PAID FOR UNDER ITEM 900.640 SPECIAL PROVISION (BRIDGE RAILING, GALVANIZED STEEL TUBING/CONCRETE COMBINATION) (COATED BLACK).

83. PROPOSED SEQUENCE OF CONSTRUCTION
    A. LAYOUT WORKING LINES THE ENTIRE WIDTH OF THE BRIDGE ALONG CENTERLINE OF BEARING, MEASURED FROM A SINGLE WORKING POINT. THE WORKING LINES SHALL BE BASED ON THE NOMINAL BEAM WIDTHS.
    B. VERIFY THE BEAM SEAT ELEVATIONS AND TAKE CORRECTIVE ACTION IF NECESSARY.
    C. BACKFILL AND PREPARE GRADE TO BOTTOM OF CURTAIN WALL.
    D. INSTALL BEARINGS
    E. ERECT THE BEAMS TO FIT WITHIN THE WORKING LINES AND CHEEKWALLS.
    F. ADJUST FASCIA BEAM TO FIT SNUG AGAINST CORK ON INTERIOR OF CHEEKWALL.
    G. CONSTRUCT FORMS FOR THE FLANGE AND CURTAIN WALL CONNECTION POURS.
    H. GROUT CONNECTIONS BETWEEN BEAM FLANGES AND CURTAIN WALLS AND CURE.
    I. COMPLETE PLACEMENT OF BACKFILL AND PREPARE GRADE FOR APPROACH SLABS.
    J. PLACE APPROACH SLABS
    K. GROUT REBAR DOWELS IN APPROACH SLAB.
    L. COMPLETE LONGITUDINAL CLOSURE POURS OF APPROACH SLAB.

84. ALTERNATE SEQUENCE OF CONSTRUCTION MAY BE SUBMITTED FOR APPROVAL BY THE PROJECT MANAGER.

MISCELLANEOUS

85. ITEM 520.10, "MEMBRANE WATERPROOFING, SPRAY APPLIED" SHALL BE APPLIED TO THE TOP OF OVERLAY AS PER THE MANUFACTURER'S INSTRUCTIONS AND EXTEND ONTO THE APPROACH SLABS TWO FEET BEYOND THE BEGIN BRIDGE/END OF BRIDGE.

BRIDGE RAILING, GALVANIZED STEEL TUBING CONCRETE COMBINATION (COATED BLACK)

86. ALL WORK AND MATERIALS SHALL CONFORM TO SECTION 525.

87. PRIOR TO GALVANIZING THE ASSEMBLED POST, GRIND ALL EDGES TO A MINIMUM RADIUS OF 1/16".

88. ALL POSTS SHALL BE SET NORMAL TO GRADE.

89. SECTIONS OF RAIL TUBE SHALL BE ATTACHED TO A MINIMUM OF TWO BRIDGE POSTS AND PREFERABLY TO AT LEAST 4 POSTS.

90. HOLES IN RAILS FOR TUBE ATTACHMENT MAY BE FIELD-DRILLED. HOLES SHALL BE COATED WITH AN APPROVED ZINC-RICH PAINT PRIOR TO INSTALLATION.

91. BOLTS SHALL BE TORQUED SNUG TIGHT (APPROXIMATELY 100 FT-LB).

92. RAIL TUBES SHALL BE ATTACHED USING 3/4" FULL DIAMETER BODY ASTM A 449 (TYPE 1) ROUND HEAD BOLTS INSERTED THROUGH THE FACE OF THE TUBE.

93. SEE STANDARD DRAWING G-1 FOR DETAILS OF DELINEATORS. A DELINEATOR SHALL BE INSTALLED AT 30 FOOT SPACING OR THE NEAREST POST. WHITE IS TO BE INSTALLED ON THE DRIVER'S RIGHT. FOR ONE WAY BRIDGES, YELLOW IS TO BE INSTALLED ON THE DRIVER'S LEFT. PAYMENT FOR DELINEATORS SHALL BE INCIDENTAL TO OTHER ITEMS.

94. BRIDGE RAILING SHALL HAVE A RUBBED FINISH IN ACCORDANCE WITH SECTION 501.

GENERAL CONSTRUCTION SEQUENCE

97. PROPOSED SEQUENCE OF CONSTRUCTION
    A. CLOSE ROADWAY, DEMO EXISTING BRIDGE.
    B. EXCAVATE FOR ABUTMENT NO 1 AND NO 2 FOOTINGS, INCLUDING SOLID ROCK EXCAVATION, PREPARE LEDGE FOR SUBFOOTINGS.
    C. PREPARE LEDGE FOR ARCH FOOTINGS.
    D. PLACE SUBFOOTINGS AND ARCH FOOTINGS.
    E. PLACE PRECAST FOOTINGS FOR ABUTMENT NO 1 AND NO 2. LEVEL FOOTINGS AND GROUT.
    F. ERECT PRECAST ARCH PER MANUFACTURER'S RECOMMENDATION.
    G. ERECT PRECAST ABUTMENT NO 1 AND NO 2 STEMS AND PRECAST WINGWALLS. GROUT CONNECTIONS AND KEYWAYS.
    H. FORM, CAST, AND CURE ABUTMENT NO 2 CAST-IN-PLACE WINGWALL EXTENSIONS.
    I. BACKFILL ABUTMENT NO 1 TO BOTTOM OF CURTAIN WALL ELEVATION.
    J. BACKFILL ABUTMENT NO 2 TO BOTTOM OF CURTAIN WALL ELEVATION.
    K. ERECT STEEL SUPPORT BEAMS.
    L. ERECT PRECAST NEXT BEAMS (SEE NEXT D BEAM PROPOSED SEQUENCE OF CONSTRUCTION FOR ADDITIONAL INFORMATION).
    M. INSTALL WATERLINE ON APPROACHES TO EACH ABUTMENT.
    N. BACKFILL TO BOTTOM OF APPROACH SLAB SEAT AND PLACE APPROACH SLABS (SEE NEXT D BEAM PROPOSED SEQUENCE OF CONSTRUCTION FOR ADDITIONAL INFORMATION).
    O. INSTALL WATERLINE UNDER NEXT BEAM SUPERSTRUCTURE.
    P. FORM, CAST, AND CURE BRIDGE RAIL PARAPETS.
    Q. PLACE CONCRETE OVERLAY AND CURE.
    R. FORM, CAST, AND CURE SIDEWALK ON BRIDGE.
    S. INSTALL APPROACH RAILING.
    T. ERECT PRECAST ARCHITECTURAL PANELS. (THIS TASK MAY BE COMPLETED AFTER BRIDGE IS OPEN TO TRAFFIC AS APPROVED BY RESIDENT ENGINEER).
    U. FORM, CAST, AND CURE BRIDGE COPING. (THIS TASK MAY BE COMPLETED AFTER BRIDGE IS OPEN TO TRAFFIC AS APPROVED BY RESIDENT ENGINEER).
    V. FINAL GRADE AND PAVE ON BRIDGE AND APPROACHES.
    W. OPEN BRIDGE TO TRAFFIC.
    X. FINAL PAVING, STRIPING, AND SLOPE RESTORATION USING TEMPORARY ONE-LANE CLOSURES, AS APPROVED BY THE RESIDENT ENGINEER.

98. ALTERNATE SEQUENCE OF CONSTRUCTION MAY BE SUBMITTED FOR APPROVAL BY THE PROJECT MANAGER.

WATERLINE

99. SEE WATERLINE LAYOUT SHEET FOR WATERLINE NOTES AND ADDITIONAL INFORMATION.

STATE OF VERMONT
AGENCY OF TRANSPORTATION

QUANTITY SHEET 1

SUMMARY OF ESTIMATED QUANTITIES									TOTALS		DESCRIPTIONS				DETAILED SUMMARY OF QUANTITIES		
						ROADWAY	EROSION CONTROL	NON- PART.	BRIDGE	FULL C.E. ITEMS	GRAND TOTAL	FINAL	UNIT	ITEMS	ITEM NUMBER	ROUND	QUANTITIES	UNIT	ITEMS
						1					1		LS	CLEARING AND GRUBBING, INCLUDING INDIVIDUAL TREES AND STUMPS	201.10				
						2260					2260		CY	COMMON EXCAVATION	203.15				
									360		360		CY	SOLID ROCK EXCAVATION	203.16				
						650					650		CY	SAND BORROW	203.31				
						90		150			240		CY	TRENCH EXCAVATION OF EARTH	204.20				
						15					15		CY	TRENCH EXCAVATION OF ROCK	204.21				
						1					1		CY	TRENCH EXCAVATION OF EARTH, EXPLORATORY (N.A.B.I.)	204.22				
									990		990		CY	STRUCTURE EXCAVATION	204.25				
									520		520		CY	GRANULAR BACKFILL FOR STRUCTURES	204.30				
									390		390		LF	DRILLING AND BLASTING OF SOLID ROCK	205.10				
						270					270		SY	COLD PLANING, BITUMINOUS PAVEMENT	210.10				
						123		2			125		CY	SUBBASE OF GRAVEL	301.15				
						2230					2230		CY	SUBBASE OF DENSE GRADED CRUSHED STONE	301.35				
						125					125		CY	AGGREGATE SURFACE COURSE	401.10				
						25					25		CWT	EMULSIFIED ASPHALT	404.65				
						1					1		LU	PRICE ADJUSTMENT, ASPHALT CEMENT (N.A.B.I.)	406.50				
									54		54		CY	CONCRETE, HIGH PERFORMANCE CLASS A (FPQ)	501.33				
									120		120		CY	CONCRETE, HIGH PERFORMANCE CLASS B	501.34				
									17752		17752		LB	STRUCTURAL STEEL	506.60				
									7500		7500		LB	REINFORCING STEEL, LEVEL II	507.12				
									36		36		GAL	WATER REPELLENT, SILANE	514.10				
									60		60		LF	BRIDGE EXPANSION JOINT, ASPHALTIC PLUG	516.10				
									207		207		SY	MEMBRANE WATERPROOFING, SPRAY APPLIED	520.10				
									58		58		LF	JOINT SEALER, HOT POURED	524.11				
									1		1		EACH	REMOVAL OF STRUCTURE (1121 SF - EST)	529.15				
									4		4		EACH	BEARING DEVICE ASSEMBLY, PLAIN ELASTOMERIC PAD	531.16				
									16		16		EACH	BEARING DEVICE ASSEMBLY, STEEL REINFORCED ELASTOMERIC PAD	531.17				
									1		1		LS	PRECAST CONCRETE STRUCTURE (ABUTMENT NO. 1)	540.10				
									1		1		LS	PRECAST CONCRETE STRUCTURE (ABUTMENT NO. 2)	540.10				
									1		1		LS	PRECAST CONCRETE STRUCTURE (APPROACH SLAB NO. 1)	540.10				
									1		1		LS	PRECAST CONCRETE STRUCTURE (APPROACH SLAB NO. 2)	540.10				
									1		1		LS	PRECAST CONCRETE STRUCTURE (ARCH)	540.10				
									1		1		LS	PRECAST CONCRETE STRUCTURE (ARCHITECTURAL PANELS)	540.10				
									1		1		LS	PRECAST CONCRETE STRUCTURE (WINGWALL NO. 1)	540.10				
									1		1		LS	PRECAST CONCRETE STRUCTURE (WINGWALL NO. 2)	540.10				
									1		1		LS	PRECAST CONCRETE STRUCTURE (WINGWALL NO. 3)	540.10				
									1		1		LS	PRECAST CONCRETE STRUCTURE (WINGWALL NO. 4)	540.10				

VHB Vanasse Hangen Brustlin, Inc.

PROJECT NAME: MIDDLEBURY
PROJECT NUMBER: RS 0174(8)

FILE NAME: z78f2170S_R.dgn
PROJECT LEADER: M.A. COLGAN
DESIGNED BY: E.A.FIALA
QUANTITY SHEET #1

PLOT DATE: 8/28/2013
DRAWN BY: C.L. CILLEY
CHECKED BY: G.S. GOODRICH
SHEET 9 OF 104

STATE OF VERMONT
AGENCY OF TRANSPORTATION

QUANTITY SHEET 2

SUMMARY OF ESTIMATED QUANTITIES					TOTALS		DESCRIPTIONS			
ROADWAY	EROSION CONTROL	NON- PART.	BRIDGE	FULL C.E. ITEMS	GRAND TOTAL	FINAL	UNIT	ITEMS	ITEM NUMBER	ROUND
								BEGIN OPTION AA		
40					40		LF	18" CAAP .060 (2-2/3 X 1/2)	601.0215	
40					40		LF	18" PCCSP .079 (2-2/3 X 1/2)	601.0416	
40					40		LF	18" RCP CLASS III	601.0815	
40					40		LF	18" CPEP(SL)	601.2615	
								END OPTION AA		
2					2		EACH	18" CPEPES	601.7015	
3					3		EACH	PRECAST REINFORCED CONCRETE DROP INLET WITH CAST IRON GRATE	604.18	
333					333		LF	6 INCH UNDERDRAIN PIPE	605.10	
1					1		EACH	UNDERDRAIN FLUSHING BASIN	605.95	
1					1		MGAL	DUST CONTROL WITH WATER	609.10	
	535				535		CY	STONE FILL, TYPE II	613.11	
335					335		LF	CAST-IN-PLACE CONCRETE CURB, TYPE B	616.28	
170					170		SY	PORTLAND CEMENT CONCRETE SIDEWALK, 5 INCH	618.10	
9					9		SF	DETECTABLE WARNING SURFACE	618.30	
2					2		EACH	STEEL MARKER POSTS	619.16	
265					265		LF	BOX BEAM GUARDRAIL (COATED BLACK)	621.30	
384					384		LF	REMOVAL AND DISPOSAL OF GUARDRAIL	621.80	
		2			2		EACH	ADJUST ELEVATION OF VALVE BOX	629.20	
		95			95		TON	CRUSHED STONE BEDDING	629.54	
120					120		HR	FLAGGERS	630.15	
				1	1		LS	FIELD OFFICE, ENGINEERS	631.10	
				1	1		LS	TESTING EQUIPMENT, CONCRETE	631.16	
				1	1		LS	TESTING EQUIPMENT, BITUMINOUS	631.17	
				3000	3000		DL	FIELD OFFICE TELEPHONE (N.A.B.I.)	631.26	
1					1		LS	MOBILIZATION/DEMOBILIZATION	635.11	
1					1		LS	TRAFFIC CONTROL	641.10	
14					14		DAY	PORTABLE CHANGEABLE MESSAGE SIGN RENTAL	641.17	
1750					1750		LF	DURABLE 4 INCH WHITE LINE	646.400	
1825					1825		LF	DURABLE 4 INCH YELLOW LINE	646.410	
15					15		LF	DURABLE 24 INCH STOP BAR	646.480	
46					46		EACH	LINE STRIPING TARGETS	646.76	
	980				980		SY	GEOTEXTILE UNDER STONE FILL	649.31	
	380				380		SY	GEOTEXTILE FOR SILT FENCE, WOVEN WIRE REINFORCED	649.515	
	16				16		LB	SEED	651.15	
	135				135		LB	FERTILIZER	651.18	
	1				1		TON	AGRICULTURAL LIMESTONE	651.20	
	1				1		TON	HAY MULCH	651.25	
	8				8		CY	TOPSOIL	651.35	
	800				800		SY	GRUBBING MATERIAL	651.40	

DETAILED SUMMARY OF QUANTITIES		
QUANTITIES	UNIT	ITEMS

Vanasse Hangen Brustlin, Inc.

PROJECT NAME: MIDDLEBURY
PROJECT NUMBER: RS 0174(8)

FILE NAME: z78f217QS_R.dgn
PROJECT LEADER: M.A. COLGAN
DESIGNED BY: E.A.FIALA
QUANTITY SHEET #2

PLOT DATE: 8/29/2013
DRAWN BY: C.L. CILLEY
CHECKED BY: G.S. GOODRICH
SHEET 10 OF 104

VHB 57438

STATE OF VERMONT
AGENCY OF TRANSPORTATION

QUANTITY SHEET 3

SUMMARY OF ESTIMATED QUANTITIES / TOTALS / DESCRIPTIONS

ROADWAY	EROSION CONTROL	NON- PART.	BRIDGE	FULL C.E. ITEMS	GRAND TOTAL	FINAL	UNIT	ITEMS	ITEM NUMBER	ROUND
	1				1		LS	EPSC PLAN	652.10	
	50				50		HR	MONITORING EPSC PLAN	652.20	
	1				1		LU	MAINTENANCE OF EPSC PLAN (N.A.B.I.)	652.30	
	545				545		SY	TEMPORARY EROSION MATTING	653.20	
	50				50		CY	VEHICLE TRACKING PAD	653.35	
	360				360		LF	BARRIER FENCE	653.50	
	1590				1590		LF	PROJECT DEMARCATION FENCE	653.55	
64					64		SF	TRAFFIC SIGNS, TYPE A	675.20	
195					195		LF	SQUARE TUBE SIGN POST AND ANCHOR	675.341	
23					23		EACH	REMOVING SIGNS	675.50	
3					3		EACH	DELINEATOR WITH STEEL POST	676.10	
1					1		LU	PRICE ADJUSTMENT, FUEL (N.A.B.I.)	690.50	
			6		6		CY	SPECIAL PROVISION (HIGH PERFORMANCE CONCRETE, RAPID SET)(FPQ)	900.608	
4					4		EACH	SPECIAL PROVISION (GUARDRAIL APPROACH SECTION, GALVANIZED 2 RAIL BOX BEAM)(COATED BLACK)	900.620	
			224		224		LF	SPECIAL PROVISION (BRIDGE RAILING, GALVANIZED STEEL TUBING/CONCRETE COMBINATION)(COATED BLACK)	900.640	
			264		264		LF	SPECIAL PROVISION (PRESTRESSED CONCRETE NEXT D BEAMS)(NEXT 28D)	900.640	
			1		1		LS	SPECIAL PROVISION (ARCH LIGHTING)	900.645	
1					1		LS	SPECIAL PROVISION (CPM SCHEDULE)	900.645	
		1			1		LS	SPECIAL PROVISION (WATER MAIN ON BRIDGE)(8")	900.645	
1					1		LU	SPECIAL PROVISION (INCENTIVE/DISINCENTIVE)(N.A.B.I.)	900.650	
1					1		LU	SPECIAL PROVISION (MAT DENSITY PAY ADJUSTMENT, SMALL QUANTITY)(N.A.B.I.)	900.650	
1					1		LU	SPECIAL PROVISION (MIXTURE PAY ADJUSTMENT)(N.A.B.I.)	900.650	
1100					1100		TON	SPECIAL PROVISION (BITUMINOUS CONCRETE PAVEMENT, SMALL QUANTITY)	900.680	

DETAILED SUMMARY OF QUANTITIES

QUANTITIES	UNIT	ITEMS

Vanasse Hangen Brustlin, Inc.

PROJECT NAME: MIDDLEBURY
PROJECT NUMBER: RS 0174(8)

FILE NAME: z78f217QS_R.dgn
PROJECT LEADER: M.A. COLGAN
DESIGNED BY: E.A.FIALA
QUANTITY SHEET #3

PLOT DATE: 8/28/2013
DRAWN BY: C.L. CILLEY
CHECKED BY: G.S. GOODRICH

VHB 57438

STATE OF VERMONT
AGENCY OF TRANSPORTATION

BRIDGE QUANTITY SHEET 1

SUMMARY OF BRIDGE QUANTITIES								TOTALS	DESCRIPTIONS			DETAILED SUMMARY OF QUANTITIES		
DRAINAGE	ARCH	WEST ARCHITECTURAL PANEL	EAST ARCHITECTURAL PANEL	APPROACH SLAB 1	ABUTMENT 1	SUPER-STRUCTURE	ABUTMENT 2	APPROACH SLAB 2	BRIDGE TOTAL	UNIT	ITEMS	ITEM NUMBER	QUANTITIES	UNIT	ITEMS
					42		318		360	CY	SOLID ROCK EXCAVATION	203.16			
					545		445		990	CY	STRUCTURE EXCAVATION	204.25			
9					186		325		520	CY	GRANULAR BACKFILL FOR STRUCTURES	204.30			
							390		390	LF	DRILLING AND BLASTING OF SOLID ROCK	205.10			
						54			54	CY	CONCRETE, HIGH PERFORMANCE CLASS A (FPQ)	501.33			
	13				71		36		120	CY	CONCRETE, HIGH PERFORMANCE CLASS B	501.34			
						17752			17752	LB	STRUCTURAL STEEL	506.60			
	500	400	300		1300	4300	700		7500	LB	REINFORCING STEEL, LEVEL II	507.12			
	4	4			5	16	7		36	GAL	WATER REPELLENT, SILANE	514.10			
				31				29	60	LF	BRIDGE EXPANSION JOINT, ASPHALTIC PLUG	516.10			
						207			207	SY	MEMBRANE WATERPROOFING, SPRAY APPLIED	520.10			
					29		29		58	LF	JOINT SEALER, HOT POURED	524.11			
						1			1	EACH	REMOVAL OF STRUCTURE (1121 SF - EST)	529.15			
					2		2		4	EACH	BEARING DEVICE ASSEMBLY, PLAIN ELASTOMERIC PAD	531.16			
					8		8		16	EACH	BEARING DEVICE ASSEMBLY, STEEL REINFORCED ELASTOMERIC PAD	531.17			
					1				1	LS	PRECAST CONCRETE STRUCTURE (ABUTMENT NO. 1)	540.10			
							1		1	LS	PRECAST CONCRETE STRUCTURE (ABUTMENT NO. 2)	540.10			
				1					1	LS	PRECAST CONCRETE STRUCTURE (APPROACH SLAB NO. 1)	540.10			
								1	1	LS	PRECAST CONCRETE STRUCTURE (APPROACH SLAB NO. 2)	540.10			
	1								1	LS	PRECAST CONCRETE STRUCTURE (ARCH)	540.10			
		0.5	0.5						1	LS	PRECAST CONCRETE STRUCTURE (ARCHITECTURAL PANELS)	540.10			
					1				1	LS	PRECAST CONCRETE STRUCTURE (WINGWALL NO. 1)	540.10			
					1				1	LS	PRECAST CONCRETE STRUCTURE (WINGWALL NO. 2)	540.10			
							1		1	LS	PRECAST CONCRETE STRUCTURE (WINGWALL NO. 3)	540.10			
							1		1	LS	PRECAST CONCRETE STRUCTURE (WINGWALL NO. 4)	540.10			
				2		2		2	6	CY	SPECIAL PROVISION (HIGH PERFORMANCE CONCRETE, RAPID SET)(FPQ)	900.608			
						224			224	LF	SPECIAL PROVISION (BRIDGE RAILING, GALVANIZED STEEL TUBING/CONCRETE COMBINATION)(COATED BLACK)	900.640			
						264			264	LF	SPECIAL PROVISION (PRESTRESSED CONCRETE NEXT D BEAMS)(NEXT 28D)	900.640			
	1								1	LS	SPECIAL PROVISION (ARCH LIGHTING)	900.645			

Vanasse Hangen Brustlin, Inc.

PROJECT NAME: MIDDLEBURY
PROJECT NUMBER: RS 0174(8)

FILE NAME: z78f2170S_R.dgn
PROJECT LEADER: M.A. COLGAN
DESIGNED BY: E.A.FIALA
BRIDGE QUANTITY SHEET #1

PLOT DATE: 8/28/2013
DRAWN BY: C.L. CILLEY
CHECKED BY: G.S. GOODRICH
SHEET 12 OF 104

VHB 57438

STATE OF VERMONT
AGENCY OF TRANSPORTATION

EARTHWORKS

STATION	DIST FT.	TOTAL EXCAVATION EARTH AND ROCK AREA S.F.	TOTAL EXCAVATION EARTH AND ROCK VOLUME C.Y.	ROCK EXCAVATION AREA S.F.	ROCK EXCAVATION VOLUME C.Y.	EMBANKMENT AREA S.F.	EMBANKMENT VOLUME C.Y.	AREA S.F.	VOLUME C.Y.
136+00		0				0			
	50		87						
136+50		94				2			
	50		178				3		
137+00		98				2			
	50		213				2		
137+50		132				0			
	50		252				3		
138+00		140				3			
	50		246				3		
138+50		126				0			
	50		203				12		
139+00		94				13			
	50		87				12		
139+50		0				0			
	50		15				47	CUT	2189
140+00		16				51		ROCK	0
	50		30				75	R.FAC	.495
140+50		0+16				30		FILL	224
	50		37				38	F.FAC	1.15
141+00		0+24				11		EX. C	1931
	50		88				11		
141+50		71				2			
	50		161				2		
142+00		104				1			
	50		186				1		
142+50		98				0			
	50		173				5		
143+00		89				5			
	50		157				7		
143+50		80				3			
	50		75				3		
144+00		0				0			
50+25		16				19			
	25		18						
50+50		23				8		CUT	71
	25		24				8	ROCK	0
50+75		30				9		R.FAC	.495
	25		28				4	FILL	13
51+00		31				0		F.FAC	1.15
								EX. C	56

STATION	DIST FT.	TOTAL EXCAVATION EARTH AND ROCK AREA S.F.	TOTAL EXCAVATION EARTH AND ROCK VOLUME C.Y.	ROCK EXCAVATION AREA S.F.	ROCK EXCAVATION VOLUME C.Y.	EMBANKMENT AREA S.F.	EMBANKMENT VOLUME C.Y.	AREA S.F.	VOLUME C.Y.

STATION	DIST FT.	TOTAL EXCAVATION EARTH AND ROCK AREA S.F.	TOTAL EXCAVATION EARTH AND ROCK VOLUME C.Y.	ROCK EXCAVATION AREA S.F.	ROCK EXCAVATION VOLUME C.Y.	EMBANKMENT AREA S.F.	EMBANKMENT VOLUME C.Y.	AREA S.F.	VOLUME C.Y.

SUMMARY AND BALANCES

STATION TO STATION		TOT EXC. EARTH & ROCK C.Y.	ROCK EXCAV C.Y.	EMBANK C.Y.	EXCESSES CUT	EXCESSES FILL	ACUMULATIVE EXCESSES CUT	ACUMULATIVE EXCESSES FILL
VT 125								
135+50	144+50	2189		224	1965		1965	
NORTH BRANCH ROAD								
50+00	51+00	71		13	58		2023	

REMARKS

EARTH AND ROCK EXCAVATION	2260	
SOLID ROCK EXCAVATION		
EARTH EXCAVATION	2260	
PLANIMETERED FILL	237	
LESS FACTORED SOLID ROCK		
LESS DISPLACEMENT OF ANY LARGE STRUCTURES		
NET PLANIMETERED FILL	237	
FACTOR	1.15	
PLANIMETERED FILL INCLUDING FACTOR	273	
MATERIALS AVAILABLE FOR FILLS		
EARTH EXCAVATION	2260	
CHANNEL EXCAVATION		
UNDERDRAIN EXCAVATION		
STRUCTURE EXCAVATION		
TOTAL MATERIAL AVAILABLE FOR FILL	2260	
TOTAL FILL INCLUDING FACTOR	273	
TOTAL MATERIAL FOR FILL	2260	
BORROW		
EXCESS EXCAVATION	1987	

PROJECT NAME: **MIDDLEBURY**
PROJECT NUMBER: **RS 0174(8)**

FILE NAME: **z78f217_Earthwork**
PROJECT LEADER: **M. COLGAN**
DESIGNED BY: **M. BOGUE**
EARTHWORK SHEET

PLOT DATE: **8/9/2013**
DRAWN BY: **M. BOGUE**
CHECKED BY: **J. A. WHITMORE**
SHEET **13** OF **104**

VHB 57438

GENERAL INFORMATION

SYMBOLOGY LEGEND NOTE

THE SYMBOLOGY ON THIS SHEET IS INTENDED TO COVER STANDARD CONVENTIONAL SYMBOLOGY. THE SYMBOLOGY IS USED FOR EXISTING & PROPOSED FEATURES WITH HEAVIER LINEWEIGHT, IN COMBINATION WITH PROJECT ANNOTATION, AS NOTED ON PROJECT PLAN SHEETS. THIS LEGEND SHEET COVERS THE BASICS. SYMBOLOGY ON PLANS MAY VARY, PLAN ANNOTATIONS AND NOTES SHOULD BE USED TO CLARIFY AS NEEDED.

R.O.W. ABBREVIATIONS (CODES) & SYMBOLS

POINT	CODE	DESCRIPTION
	CH	CHANNEL EASEMENT
	CONST	CONSTRUCTION EASEMENT
	CUL	CULVERT EASEMENT
	D&C	DISCONNECT & CONNECT
	DIT	DITCH EASEMENT
	DR	DRAINAGE EASEMENT
	DRIVE	DRIVEWAY EASEMENT
	EC	EROSION CONTROL
	I&M	INSTALL & MAINTAIN EASEMENT
	LAND	LANDSCAPE EASEMENT
	SR	SLOPE RIGHT
	UE	UTILITY EASEMENT
	(P)	PERMANENT EASEMENT
	(T)	TEMPORARY EASEMENT
■	BNDNS	BOUND SET
⧈	BNDNS	BOUND TO BE SET
●	IPNS	IRON PIN SET
◎	IPNS	IRON PIN TO BE SET
⊠	CALC	CALCULATED ROW POINT
[DISTANCE]		DISTANCE CARRIED ON NEXT SHEET

COMMON TOPOGRAPHIC POINT SYMBOLS

POINT	CODE	DESCRIPTION
	APL	BOUND APPARENT LOCATION
	BM	BENCH MARK
	BND	BOUND
	CB	CATCH BASIN
	COMB	COMBINATION POLE
	DITHR	DROP INLET THROATED DNC
	EL	ELECTRIC POWER POLE
	FPOLE	FLAGPOLE
	GASFIL	GAS FILLER
	GP	GUIDE POST
	GSO	GAS SHUT OFF
	GUY	GUY POLE
	GUYW	GUY WIRE
	GV	GATE VALUE
	H	TREE HARDWOOD
	HCTRL	CONTROL HORIZONTAL
	HVCTRL	CONTROL HORIZ. & VERTICAL
	HYD	HYDRANT
	IP	IRON PIN
	IPIPE	IRON PIPE
	LI	LIGHT - STREET OR YARD
	MB	MAILBOX
	MH	MANHOLE (MH)
	MM	MILE MARKER
	PM	PARKING METER
	PMK	PROJECT MARKER
	POST	POST STONE/WOOD
	RRSIG	RAILROAD SIGNAL
	RRSL	RAILROAD SWITCH LEVER
	S	TREE SOFTWOOD
	SAT	SATELLITE DISH
	SHRUB	SHRUB
	SIGN	SIGN
	STUMP	STUMP
	TEL	TELEPHONE POLE
	TIE	TIE
	TSIGN	SIGN W/DOUBLE POST
	VCTRL	CONTROL VERTICAL
	WELL	WELL
	WSO	WATER SHUT OFF

THESE ARE COMMON VAOT SURVEY POINT SYMBOLS FOR EXISTING FEATURES, ALSO USED FOR PROPOSED FEATURES WITH HEAVIER LINEWEIGHT, IN COMBINATION WITH PROPOSED ANNOTATION.

PROPOSED GEOMETRY CODES

CODE	DESCRIPTION
PC	POINT OF CURVATURE
PI	POINT OF INTERSECTION
CC	CENTER OF CURVE
PT	POINT OF TANGENCY
PCC	POINT OF COMPOUND CURVE
PRC	POINT OF REVERSE CURVE
POB	POINT OF BEGINNING
POE	POINT OF ENDING
STA	STATION PREFIX
AH	AHEAD STATION SUFFIX
BK	BACK STATION SUFFIX
D	CURVE DEGREE OF (100FT)
R	CURVE RADUIS OF
T	CURVE TANGENT LENGTH
L	CURVE LENGTH OF
E	CURVE EXTERNAL DISTANCE

UTILITY SYMBOLOGY

UNDERGROUND UTILITIES

UT	TELEPHONE
UE	ELECTRIC
UC	CABLE (TV)
UEC	ELECTRIC+CABLE
UET	ELECTRIC+TELEPHONE
UCT	CABLE+TELEPHONE
UECT	ELECTRIC+CABLE+TELEP.
G	GAS LINE
W	WATER LINE
S	SANITARY SEWER (SEPTIC)

ABOVE GROUND UTILITIES (AERIAL)

T	TELEPHONE
E	ELECTRIC
C	CABLE (TV)
EC	ELECTRIC+CABLE
ET	ELECTRIC+TELEPHONE
AER E&T	ELECTRIC+TELEPHONE
CT	CABLE+TELEPHONE
ECT	ELECTRIC+CABLE+TELEP.
	UTILITY POLE GUY WIRE

PROJECT CONSTRUCTION SYMBOLOGY

PROJECT DESIGN & LAYOUT SYMBOLOGY

CZ	CLEAR ZONE
	PLAN LAYOUT MATCHLINE

PROJECT CONSTRUCTION FEATURES

	TOP OF CUT SLOPE
	TOE OF FILL SLOPE
	STONE FILL
	BOTTOM OF DITCH ℄
	CULVERT PROPOSED
	STRUCTURE SUBSURFACE
PDF	PROJECT DEMARCATION FENCE
BF	BARRIER FENCE
	TREE PROTECTION ZONE (TPZ)
	STRIPING LINE REMOVAL
	SHEET PILES

CONVENTIONAL BOUNDARY SYMBOLOGY

BOUNDARY LINES

TOWN LINE	TOWN BOUNDARY LINE
COUNTY LINE	COUNTY BOUNDARY LINE
STATE LINE	STATE BOUNDARY LINE
	PROPOSED STATE R.O.W. (LIMITED ACCESS)
	PROPOSED STATE R.O.W.
	STATE ROW (LIMITED ACCESS)
	STATE ROW
	TOWN ROW
	PERMANENT EASEMENT LINE (P)
	TEMPORARY EASEMENT LINE (T)
	SURVEY LINE
P/L	PROPERTY LINE (P/L)
SR	SLOPE RIGHTS
6f	6F PROPERTY BOUNDARY
4f	4F PROPERTY BOUNDARY
HAZ	HAZARDOUS WASTE

EPSC LAYOUT PLAN SYMBOLOGY

EPSC MEASURES

	FILTER CURTAIN
	SILT FENCE
	SILT FENCE WOVEN WIRE
	CHECK DAM
	DISTURBED AREAS REQUIRING RE-VEGETATION
	EROSION MATTING

ENVIRONMENTAL RESOURCES

	WETLAND BOUNDARY
	RIPARIAN BUFFER ZONE
	WETLAND BUFFER ZONE
	SOIL TYPE BOUNDARY
T&E	THREATENED & ENDANGERED SPECIES
HAZ	HAZARDOUS WASTE AREA
AG	AGRICULTURAL LAND
HABITAT	FISH & WILDLIFE HABITAT
FLOOD PLAIN	FLOOD PLAIN
OHW	ORDINARY HIGH WATER (OHW)
	STORM WATER
	USDA FOREST SERVICE LANDS
	WILDLIFE HABITAT SUIT/CONN

ARCHEOLOGICAL & HISTORIC

ARCH	ARCHEOLOGICAL BOUNDARY
HISTORIC DIST	HISTORIC DISTRICT BOUNDARY
HISTORIC	HISTORIC AREA
H	HISTORIC STRUCTURE

CONVENTIONAL TOPOGRAPHIC SYMBOLOGY

EXISTING FEATURES

	ROAD EDGE PAVEMENT
	ROAD EDGE GRAVEL
	DRIVEWAY EDGE
	DITCH
	FOUNDATION
	FENCE (EXISTING)
	FENCE WOOD POST
	FENCE STEEL POST
	GARDEN
	ROAD GUARDRAIL
	RAILROAD TRACKS
	CULVERT (EXISTING)
	STONE WALL
	WALL
	WOOD LINE
	BRUSH LINE
	HEDGE
	BODY OF WATER EDGE
	LEDGE EXPOSED

VHB Vanasse Hangen Brustlin, Inc.

PROJECT NAME:	MIDDLEBURY
PROJECT NUMBER:	RS 0174(8)

FILE NAME: z78f217legendsheet.dgn	PLOT DATE: 8/27/2013
PROJECT LEADER: M.A. COLGAN	DRAWN BY: C.L. CILLEY
DESIGNED BY: VTRANS	CHECKED BY: G.S. GOODRICH
CONVENTIONAL SYMBOLOGY LEGEND	SHEET 14 OF 104

GPS CONTROL POINTS

NOT SHOWN ON PLANS

NOT SHOWN ON PLANS

NOT SHOWN ON PLANS

TRAVERSE TIES

HVCTRL #201

NORTH =	536627.194
EAST =	1485194.664
ELEV. =	485.691

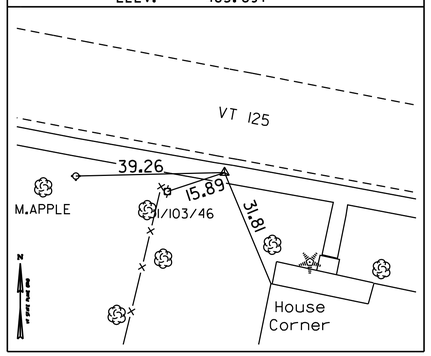

HVCTRL #202

NORTH =	536600.538
EAST =	1485341.550
ELEV. =	487.699

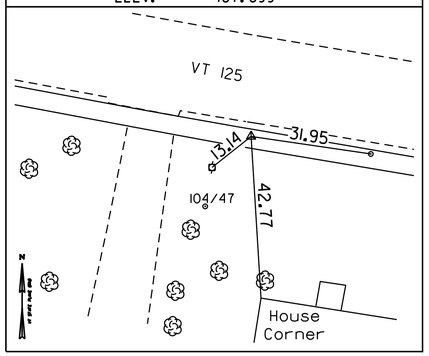

HVCTRL #203

NORTH =	536578.750
EAST =	1485483.801
ELEV. =	492.771

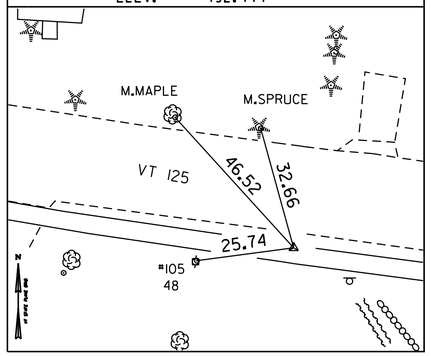

HVCTRL #1

NORTH =	536506.835
EAST =	1486020.930
ELEV. =	517.114

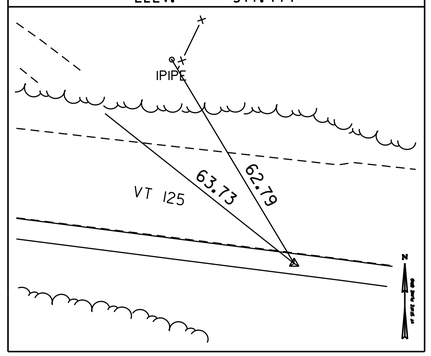

HVCTRL #2

NORTH =	536402.668
EAST =	1486130.554
ELEV. =	504.516

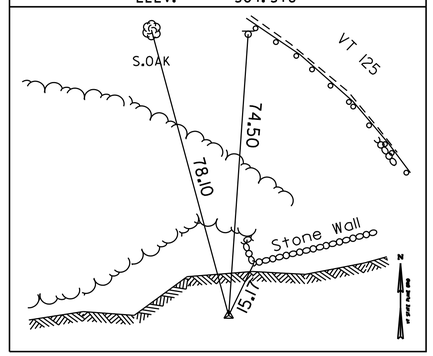

TRAVERSE TIES

HVCTRL #3

NORTH =	536463.569
EAST =	1486227.319
ELEV. =	530.103

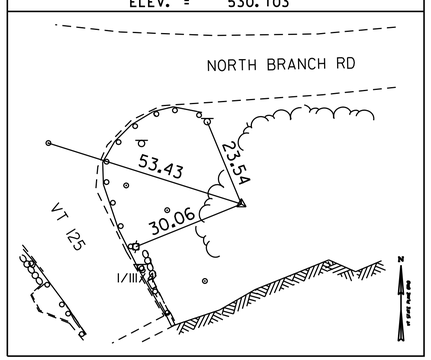

DATUM	
VERTICAL	NAVD 88
HORIZONTAL	NAD 83 (92)
ADJUSTMENT	-

VHB Vanasse Hangen Brustlin, Inc.

PROJECT NAME: MIDDLEBURY

PROJECT NUMBER: RS 0174(8)

FILE NAME: z78f217tie.dgn
PROJECT LEADER: M.A. COLGAN
DESIGNED BY: B.J. MASSE
TIE SHEET

PLOT DATE: 8/27/2013
DRAWN BY: B.J. MASSE
CHECKED BY: G.S. GOODRICH
SHEET 15 OF 104

VHB 57438

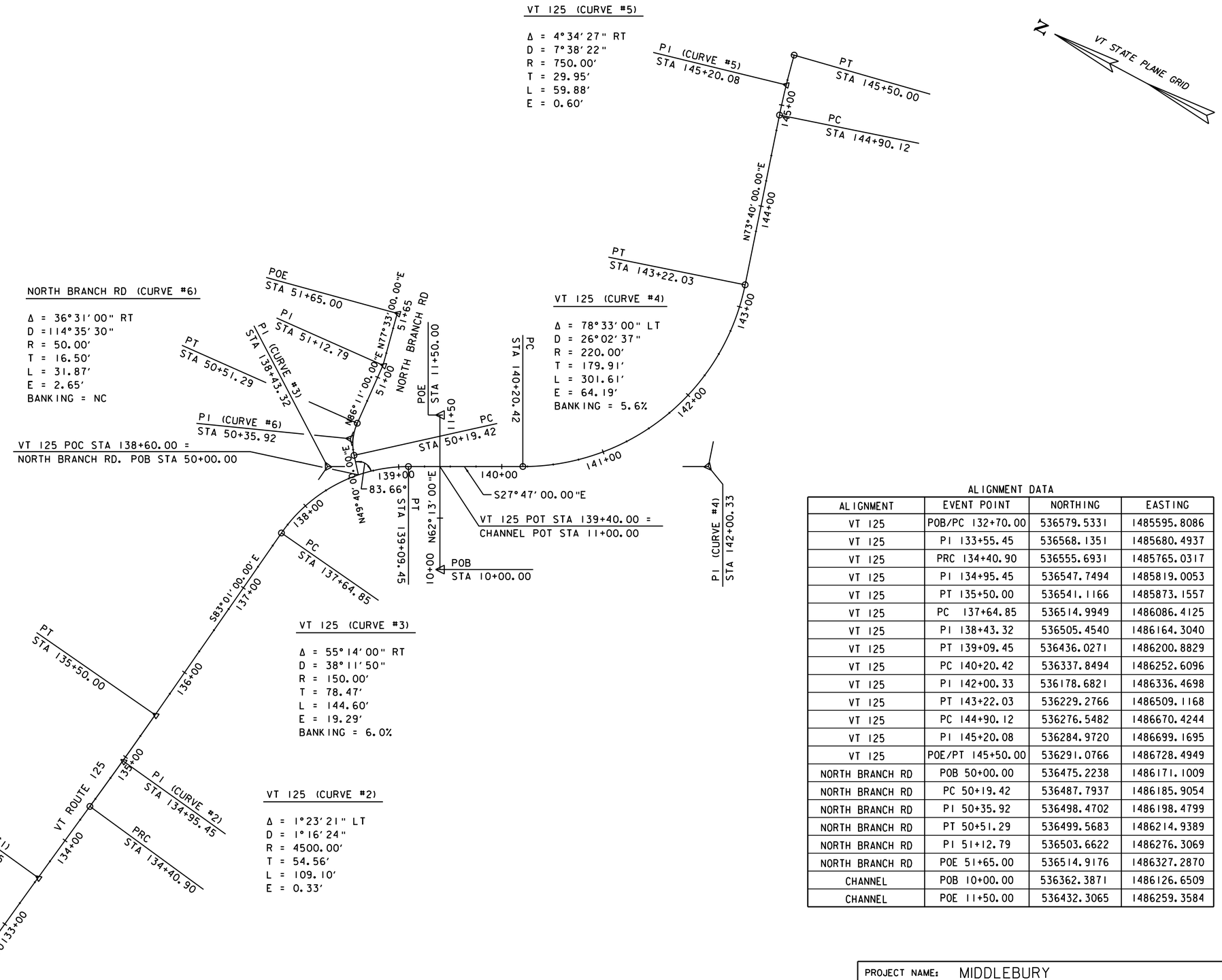

ALIGNMENT DATA

ALIGNMENT	EVENT POINT	NORTHING	EASTING
VT 125	POB/PC 132+70.00	536579.5331	1485595.8086
VT 125	PI 133+55.45	536568.1351	1485680.4937
VT 125	PRC 134+40.90	536555.6931	1485765.0317
VT 125	PI 134+95.45	536547.7494	1485819.0053
VT 125	PT 135+50.00	536541.1166	1485873.1557
VT 125	PC 137+64.85	536514.9949	1486086.4125
VT 125	PI 138+43.32	536505.4540	1486164.3040
VT 125	PT 139+09.45	536436.0271	1486200.8829
VT 125	PC 140+20.42	536337.8494	1486252.6096
VT 125	PI 142+00.33	536178.6821	1486336.4698
VT 125	PT 143+22.03	536229.2766	1486509.1168
VT 125	PC 144+90.12	536276.5482	1486670.4244
VT 125	PI 145+20.08	536284.9720	1486699.1695
VT 125	POE/PT 145+50.00	536291.0766	1486728.4949
NORTH BRANCH RD	POB 50+00.00	536475.2238	1486171.1009
NORTH BRANCH RD	PC 50+19.42	536487.7937	1486185.9054
NORTH BRANCH RD	PI 50+35.92	536498.4702	1486198.4799
NORTH BRANCH RD	PT 50+51.29	536499.5683	1486214.9389
NORTH BRANCH RD	PI 51+12.79	536503.6622	1486276.3069
NORTH BRANCH RD	POE 51+65.00	536514.9176	1486327.2870
CHANNEL	POB 10+00.00	536362.3871	1486126.6509
CHANNEL	POE 11+50.00	536432.3065	1486259.3584

DATUM

VERTICAL	NAVD 88
HORIZONTAL	NAD 83 (92)

PLAN

SCALE 1" = 50'-0

50 0 50

VHB Vanasse Hangen Brustlin, Inc.

PROJECT NAME: MIDDLEBURY

PROJECT NUMBER: RS 0174(8)

FILE NAME: z78f217bdr_all.dgn
PROJECT LEADER: M.A. COLGAN
DESIGNED BY: D.M. PECK
ALIGNMENT LAYOUT SHEET

PLOT DATE: 8/27/2013
DRAWN BY: B.J. MASSE
CHECKED BY: G.L. BAKOS
SHEET 16 OF 104

VHB 57438

COLD PLANING, BITUMINOUS PAVEMENT
STA 135+50 - STA 135+90, LT & RT

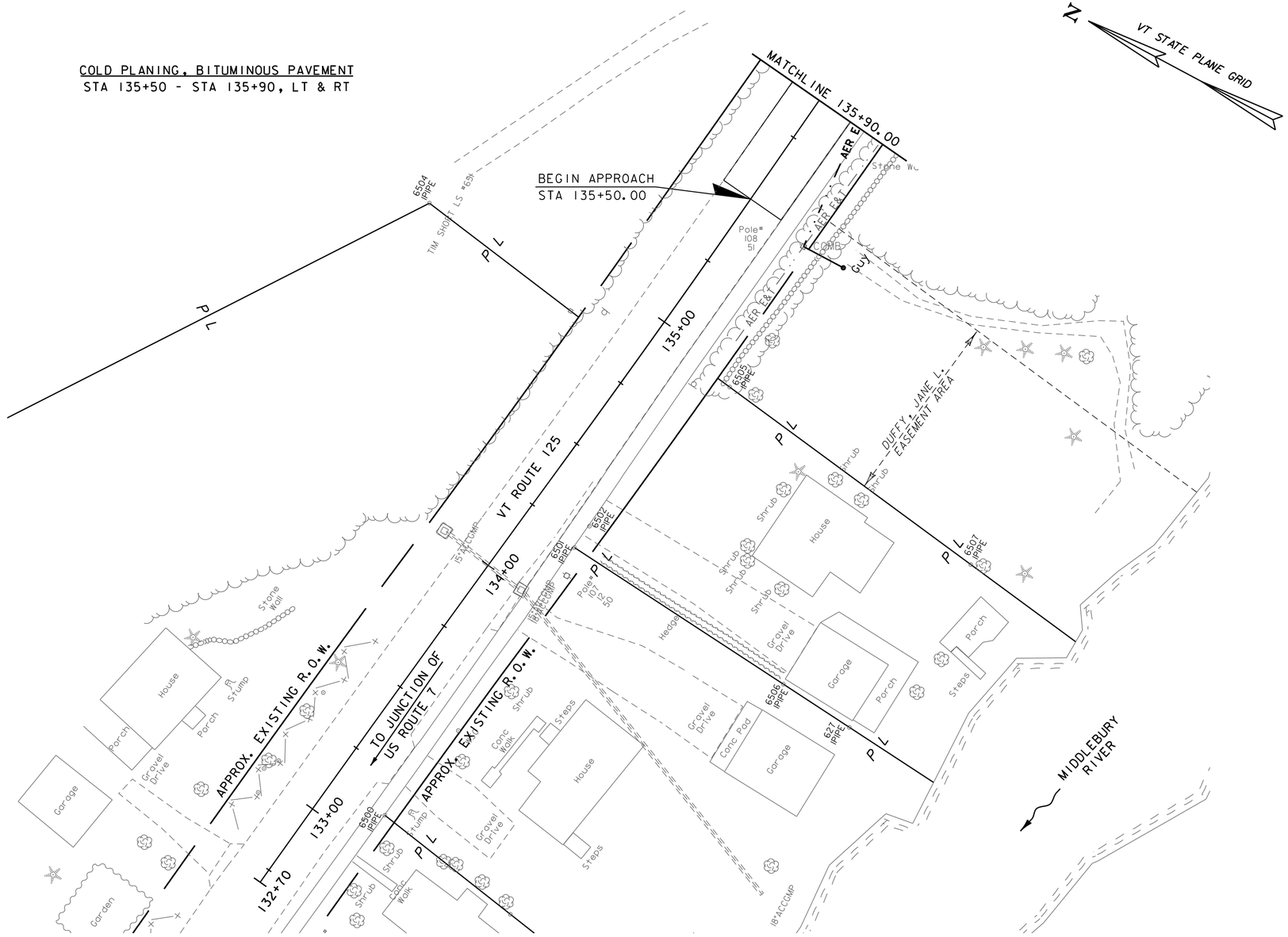

PLAN
SCALE 1" = 20'-0
20 0 20

PROJECT NAME: MIDDLEBURY	
PROJECT NUMBER: RS 0174(8)	
FILE NAME: z78f217bdr_nul.dgn	PLOT DATE: 8/27/2013
PROJECT LEADER: M.A. COLGAN	DRAWN BY: B.J. MASSE
DESIGNED BY: D.M. PECK	CHECKED BY: G.L. BAKOS
LAYOUT SHEET (1 OF 3)	SHEET 17 OF 104

VHB Vanasse Hangen Brustlin, Inc.

VHB 57438

REMOVAL AND DISPOSAL OF GUARDRAIL
STA 137+65 - STA 139+10, RT
STA 138+79 - STA 139+10, LT
STA 139+61 - STA 140+46, RT
STA 139+61 - STA 140+52, LT

BOX BEAM GUARDRAIL (COATED BLACK)
STA 137+68 - STA 138+41, RT
STA 138+80, 45.6' LT - STA 138+89, 54.1' LT
STA 140+28 - STA 140+42, RT
STA 140+30 - STA 140+60, LT

COLD PLANING, BITUMINOUS PAVEMENT
STA 135+90 - STA 136+00, LT & RT

PORTLAND CEMENT CONCRETE SIDEWALK, 5 INCH
STA 136+50 - STA 139+06.75, RT
STA 139+72.75 - STA 140+47.55, RT

CAST-IN-PLACE CONCRETE CURB, TYPE B
STA 136+50 - STA 139+06.75, RT
STA 139+72.75 - STA 140+47.55, RT

ADJUST ELEVATION OF VALVE BOX
SPECIAL PROVISION (WATER MAIN ON BRIDGE) (8")
STA 138+60.75, LT

SIDEWALK RAMP, TYPE I
STA 140+48, RT

DETECTABLE WARNING SURFACE
STA 140+47, RT

CONSTRUCT SWALE/DITCH
STA 140+00 - STA 140+75, RT

SPECIAL PROVISION (GUARDRAIL APPROACH SECTION, GALVANIZED 2 RAIL BOX BEAM (COATED BLACK))
STA 138+41 - STA 138+80, RT
STA 138+80, 45.6' LT - STA 138+86, LT
STA 139+95 - STA 140+28, RT
STA 139+95 - STA 140+30, LT

VT 125 POC STA 138+60.00 =
N. BRANCH RD. POB STA 50+00.00

EXISTING BRIDGE DATA
SINGLE SPAN CONCRETE
ARCH ON LEDGE
BUILT IN 1924
SPAN LENGTH = 42'-0"

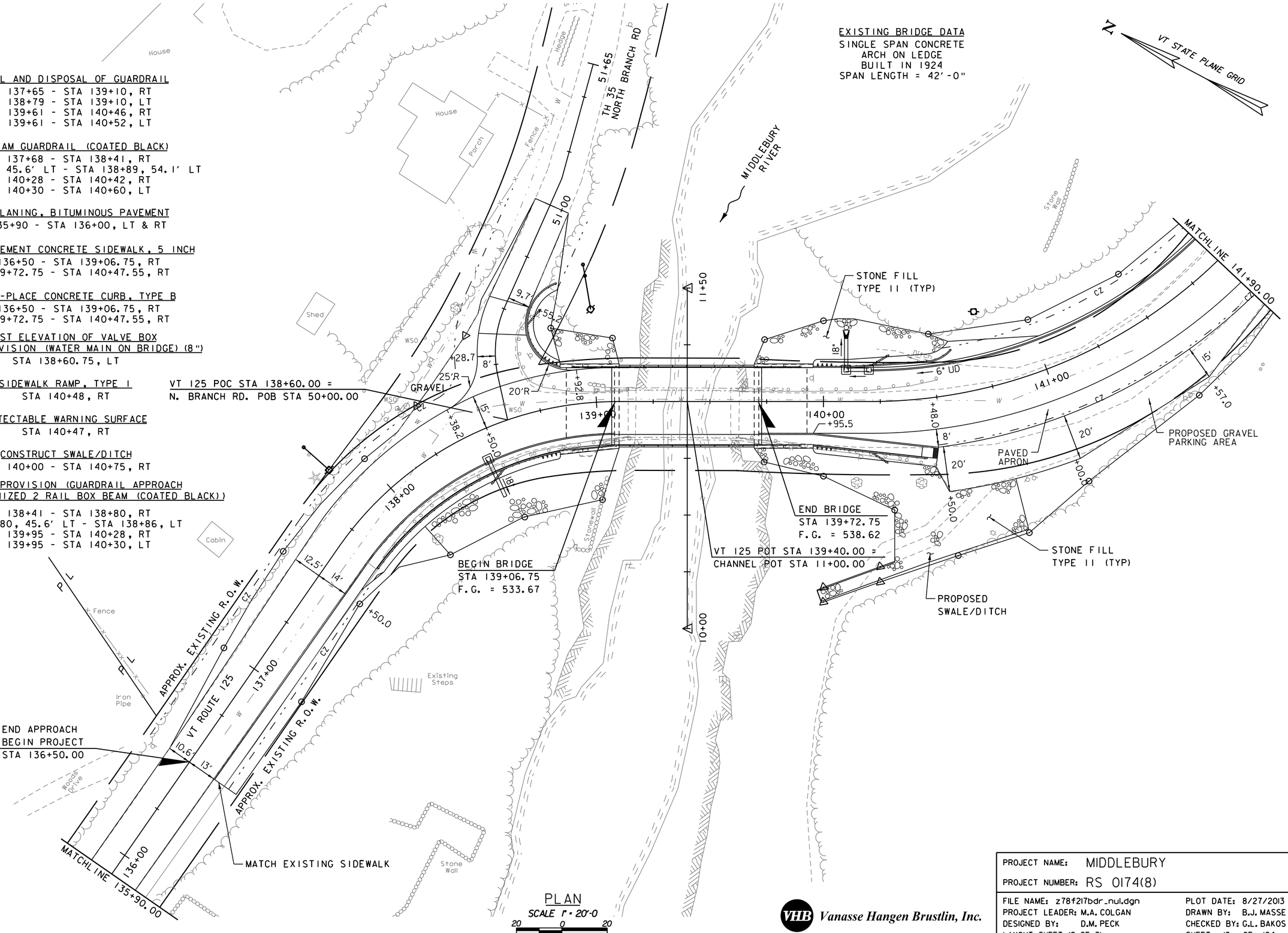

PLAN
SCALE 1" = 20'-0
20 0 20

VHB Vanasse Hangen Brustlin, Inc.

PROJECT NAME: MIDDLEBURY	
PROJECT NUMBER: RS 0174(8)	
FILE NAME: z78f217bdr_nul.dgn	PLOT DATE: 8/27/2013
PROJECT LEADER: M.A. COLGAN	DRAWN BY: B.J. MASSE
DESIGNED BY: D.M. PECK	CHECKED BY: G.L. BAKOS
LAYOUT SHEET (2 OF 3)	SHEET 18 OF 104

VHB 57438

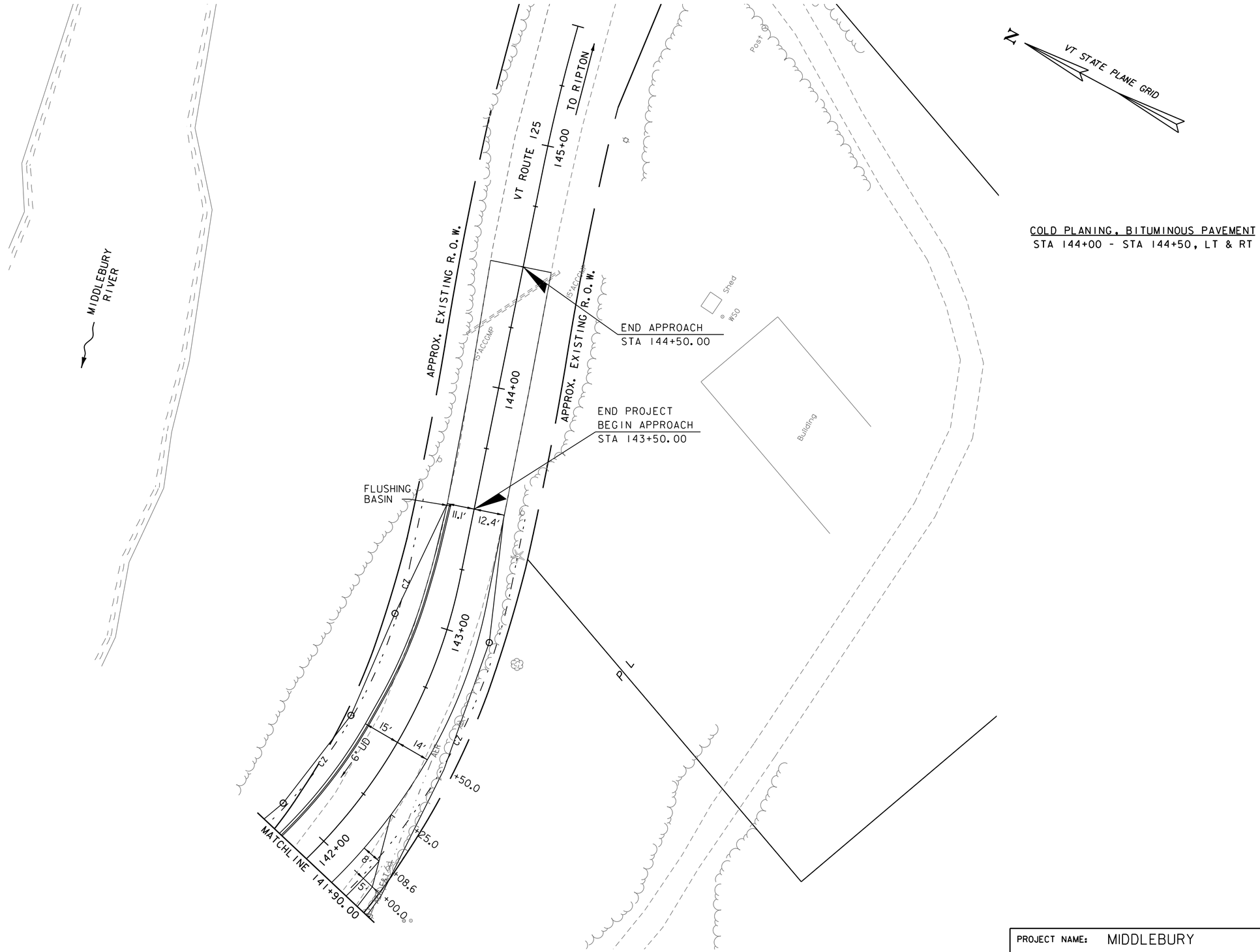

PLAN

SCALE 1" = 20'-0

20 0 20

VHB Vanasse Hangen Brustlin, Inc.

PROJECT NAME: MIDDLEBURY	
PROJECT NUMBER: RS 0174(8)	
FILE NAME: z78f217bdr_nul.dgn	PLOT DATE: 8/27/2013
PROJECT LEADER: M.A. COLGAN	DRAWN BY: B.J. MASSE
DESIGNED BY: D.M. PECK	CHECKED BY: G.L. BAKOS
LAYOUT SHEET (3 OF 3)	SHEET 19 OF 104

VHB 57438

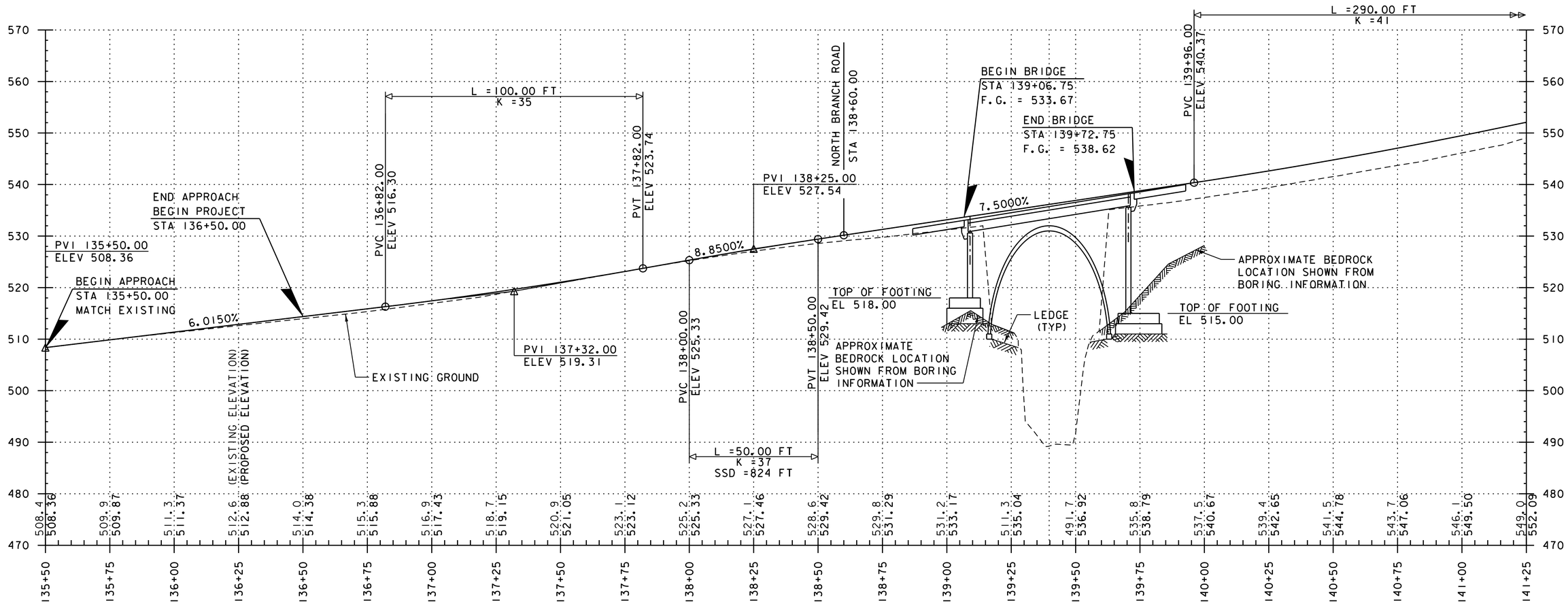

THE GRADES SHOWN TO THE NEAREST TENTH ARE THE ORIGINAL GROUND ELEVATIONS ALONG THE PROPOSED ALIGNMENT.

THE GRADES SHOWN TO THE NEAREST HUNDREDTH ARE THE FINISH GRADES ALONG THE PROPOSED ALIGNMENT.

VT 125 PROFILE

SCALE 1" = 20' HORIZONTAL
1" = 10' VERTICAL

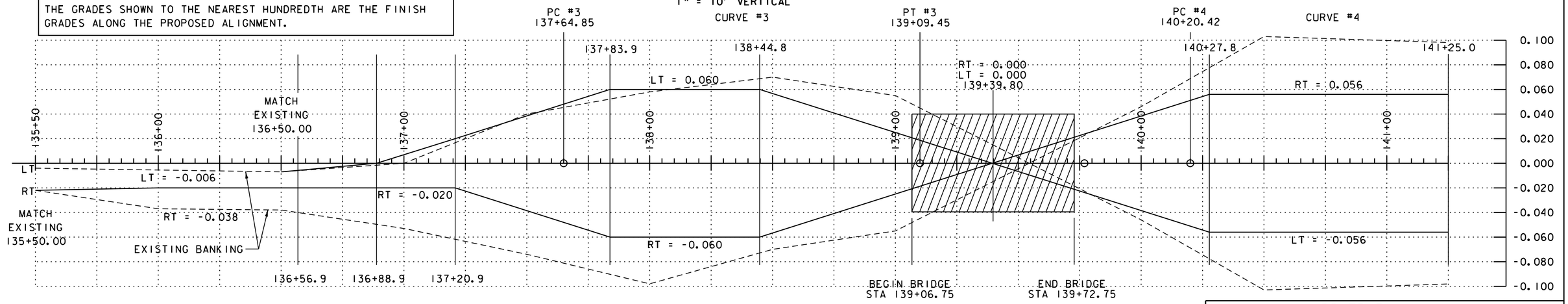

BANKING DIAGRAM

SCALE 1" = 20' HORIZONTAL
1" = 0.040 FT/FT VERTICAL

VHB Vanasse Hangen Brustlin, Inc.

PROJECT NAME: MIDDLEBURY	
PROJECT NUMBER: RS 0174(8)	
FILE NAME: z78f217Profiles.dgn	PLOT DATE: 8/27/2013
PROJECT LEADER: M.A. COLGAN	DRAWN BY: B.J. MASSE
DESIGNED BY: D.M. PECK	CHECKED BY: G.L. BAKOS
PROFILE AND BANKING DIAGRAM (1 OF 2)	SHEET 20 OF 104

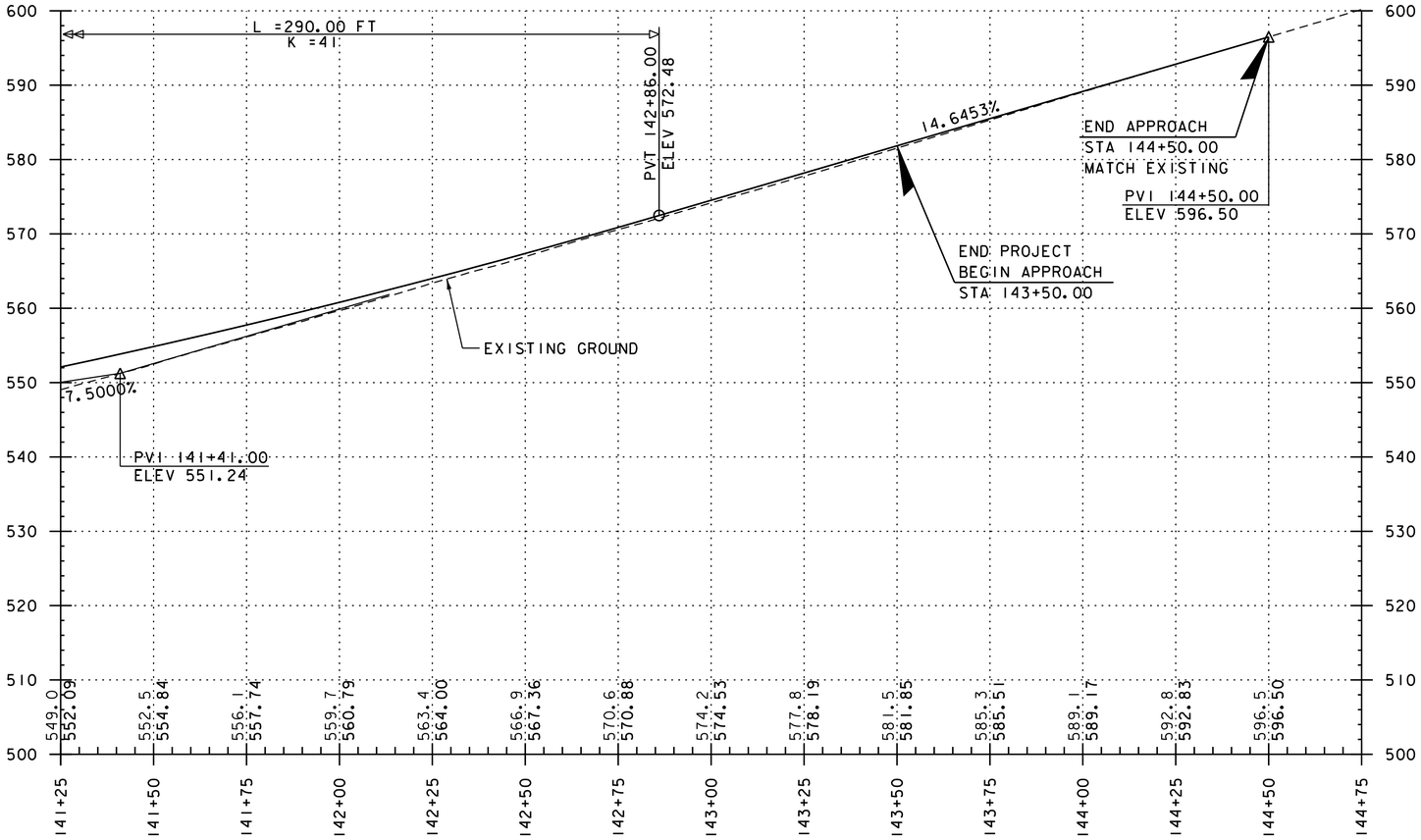

VT 125 PROFILE

SCALE 1" = 20' HORIZONTAL
1" = 10' VERTICAL

THE GRADES SHOWN TO THE NEAREST TENTH ARE THE ORIGINAL GROUND ELEVATIONS ALONG THE PROPOSED ALIGNMENT.

THE GRADES SHOWN TO THE NEAREST HUNDREDTH ARE THE FINISH GRADES ALONG THE PROPOSED ALIGNMENT.

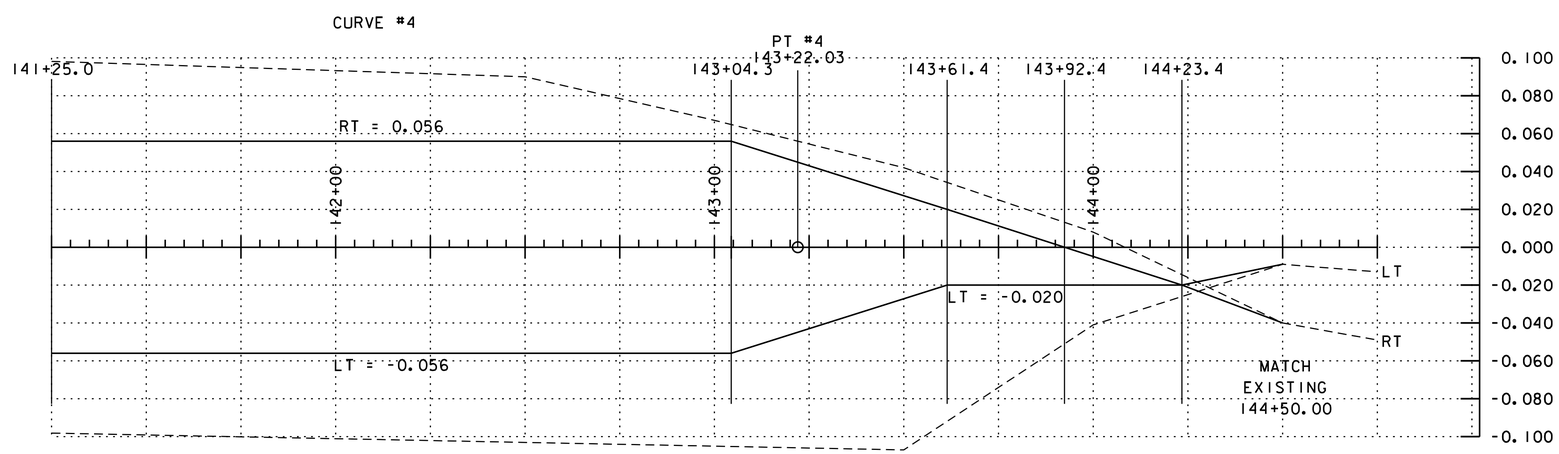

BANKING DIAGRAM

SCALE 1" = 20' HORIZONTAL
1" = 0.040 FT/FT VERTICAL

Vanasse Hangen Brustlin, Inc.

PROJECT NAME: MIDDLEBURY	
PROJECT NUMBER: RS 0174(8)	
FILE NAME: z78f217Profiles.dgn	PLOT DATE: 8/27/2013
PROJECT LEADER: M.A. COLGAN	DRAWN BY: B.J. MASSE
DESIGNED BY: D.M. PECK	CHECKED BY: G.L. BAKOS
PROFILE AND BANKING DIAGRAM (2 OF 2)	SHEET 21 OF 104

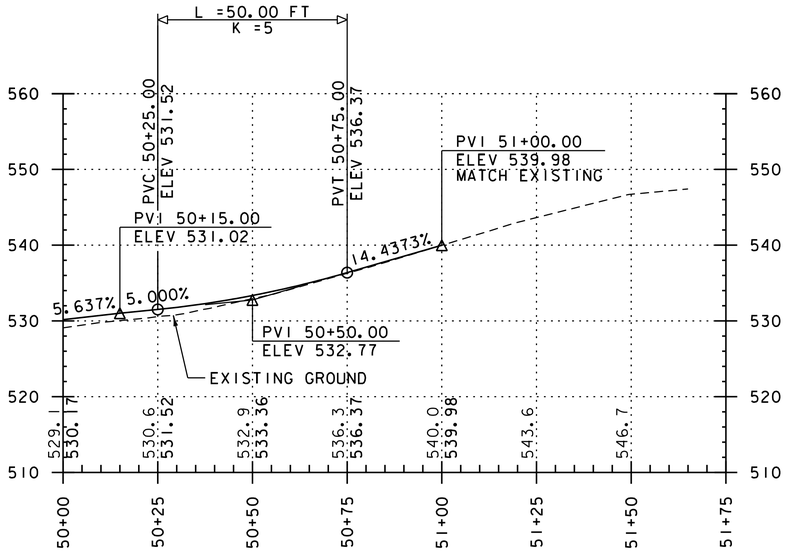

NORTH BRANCH RD PROFILE

SCALE 1" = 20' HORIZONTAL
1" = 10' VERTICAL

THE GRADES SHOWN TO THE NEAREST TENTH ARE THE ORIGINAL GROUND ELEVATIONS ALONG THE PROPOSED ALIGNMENT.

THE GRADES SHOWN TO THE NEAREST HUNDREDTH ARE THE FINISH GRADES ALONG THE PROPOSED ALIGNMENT.

VHB Vanasse Hangen Brustlin, Inc.

PROJECT NAME: MIDDLEBURY	
PROJECT NUMBER: RS 0174(8)	
FILE NAME: z78f217Profiles.dgn	PLOT DATE: 8/27/2013
PROJECT LEADER: M.A. COLGAN	DRAWN BY: B.J. MASSE
DESIGNED BY: D.M. PECK	CHECKED BY: G.L. BAKOS
PROFILE SHEET NORTH BRANCH RD	SHEET 22 OF 104

TRAFFIC CONTROL NOTES:

1. ALL SIGNS SHALL BE LOCATED SO THEY ARE VISIBLE AND ABLE TO BE READ BY THE TRAVELING PUBLIC. SIGNS SHALL BE INSTALLED SO AS NOT TO OBSTRUCT EXISTING SIGNS.
2. ALL SIGNS SHALL BE IN ACCORDANCE WITH THE CURRENT EDITIONS OF THE "MANUAL ON UNIFORM TRAFFIC CONTROL DEVICES" (MUTCD) AND THE "STANDARD HIGHWAY SIGNS AND MARKING" BOOK (SHSM) PUBLISHED BY THE FEDERAL HIGHWAY ADMINISTRATION (FHWA).
3. SOLID SUBSTRATE CONSTRUCTION SIGNS SHALL HAVE RETROREFLECTIVE SHEETING EQUAL TO OR EXCEEDING "AMERICAN SOCIETY FOR TESTING AND MATERIALS" ASTM D4956 TYPE VII, VIII OR IX REQUIREMENTS, UNLESS OTHERWISE NOTED. SOLID SUBSTRATE REGULATORY SIGNS (WHITE BACKGROUND) SHALL HAVE RETROREFLECTIVE SHEETING EQUAL TO OR EXCEEDING ASTM D4956 TYPE III.
4. SIGNS SHALL BE ERECTED BEFORE THE START OF ANY WORK AND SHALL BE COVERED UNTIL WORK COMMENCES, AND UPON COMPLETION OF THE WORK. EACH SIGN SHALL BE ERECTED IN A NEAT AND WORKMANLIKE MANNER. SIGNS SHALL BE REMOVED UPON COMPLETION OF THE WORK AT THE DISCRETION OF THE ENGINEER.
5. FIXED SIGNS SHALL BE SET SECURELY IN THE GROUND. THE BOTTOM OF A SIGN SHALL BE AT LEAST SEVEN FEET ABOVE THE EDGE OF PAVEMENT. THE NEAREST EDGE OF A SIGN SHALL BE AT LEAST SIX FEET OUTSIDE THE SHOULDER POINT OR FOUR FEET OUTSIDE GUARDRAIL. ALL SIGNS SHALL BE INSTALLED WITHIN VTRANS OR TOWNS RIGHTS-OF-WAY (ROW). IF THE SIGN CANNOT BE INSTALLED IN ROW, CONTRACTOR SHALL GET PERMISSION FROM LANDOWNER.
6. WHERE SIGN INSTALLATIONS ARE NOT PROTECTED BY GUARDRAIL OR OTHER APPROVED TRAFFIC BARRIERS, ALL SIGN STANDS AND POST INSTALLATIONS SHALL BE "NATIONAL COOPERATIVE HIGHWAY RESEARCH PROGRAM" (NCHRP) REPORT 350 COMPLIANT. NO SIGN POSTS SHALL EXTEND OVER THE TOP OF THE SIGN INSTALLED ON SAID POST(S). WHEN ANCHORS ARE INSTALLED STUB SHALL NOT BE GREATER THAN FOUR INCHES ABOVE EXISTING GROUND.
7. DETOUR ROUTE MARKER ASSEMBLIES SHALL BE INSTALLED ADJACENT TO THE EXISTING ROUTE MARKER ASSEMBLIES AT THE INTERSECTIONS.
8. INSTALL CONFIRMATORY ROUTE MARKERS ALONG DETOUR ROUTE EVERY 1-1.5 MILES AND AT ALL MAJOR SIDE STREETS, SEE SHEET 25.
9. THE CONTRACTOR SHOULD BE AWARE IT IS ANTICIPATED THAT VT 73 WILL BE CLOSED FOR THE CONSTRUCTION OF THE ROCHESTER ER STP 0162(19), BRF 0162(16), BRF 0162(17) AND ER BRF 0162(18) BRIDGE PROJECTS FROM THE BEGINNING OF JUNE TO THE END OF OCTOBER 2014. IT IS ADDITIONALLY ANTICIPATED THAT VT 100 WILL BE CLOSED FOR THE CONSTRUCTION OF THE WARREN BRF 013-4(32) BRIDGE PROJECT FOR THE FIRST THREE FULL WEEKS OF AUGUST 2014.
10. ALL WORK REQUIRED FOR DETOUR WILL BE INCLUDED IN THE UNIT PRICE BID FOR CONTRACT ITEM 641.10, TRAFFIC CONTROL.
11. SEE SHEETS 24-26 FOR DETAILS A-E.

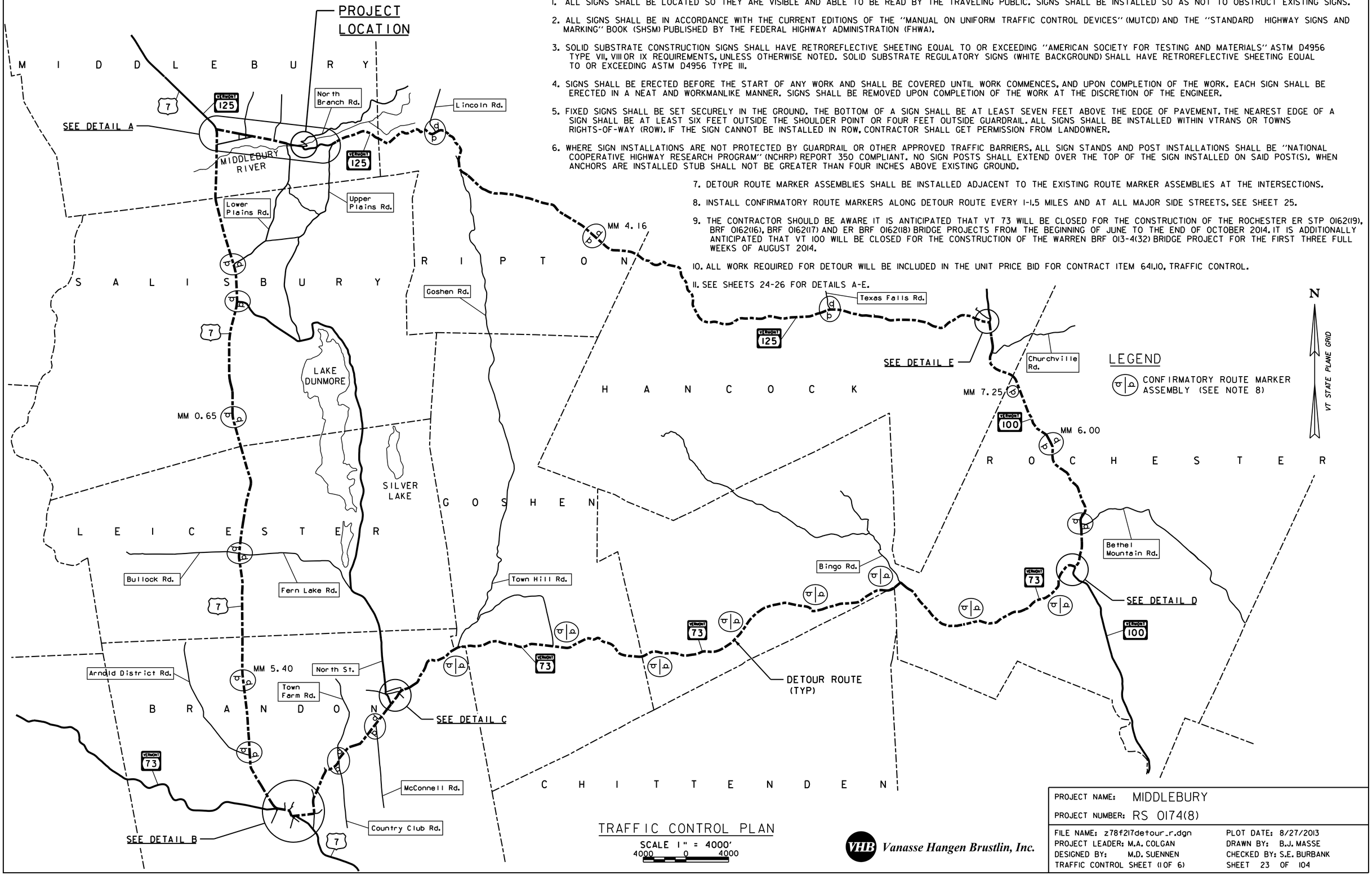

TRAFFIC CONTROL PLAN

SCALE 1" = 4000'

4000 0 4000

Vanasse Hangen Brustlin, Inc.

PROJECT NAME: MIDDLEBURY	
PROJECT NUMBER: RS 0174(8)	
FILE NAME: z78f217detour_r.dgn	PLOT DATE: 8/27/2013
PROJECT LEADER: M.A. COLGAN	DRAWN BY: B.J. MASSE
DESIGNED BY: M.D. SUENNEN	CHECKED BY: S.E. BURBANK
TRAFFIC CONTROL SHEET (1 OF 6)	SHEET 23 OF 104

VHB 57438

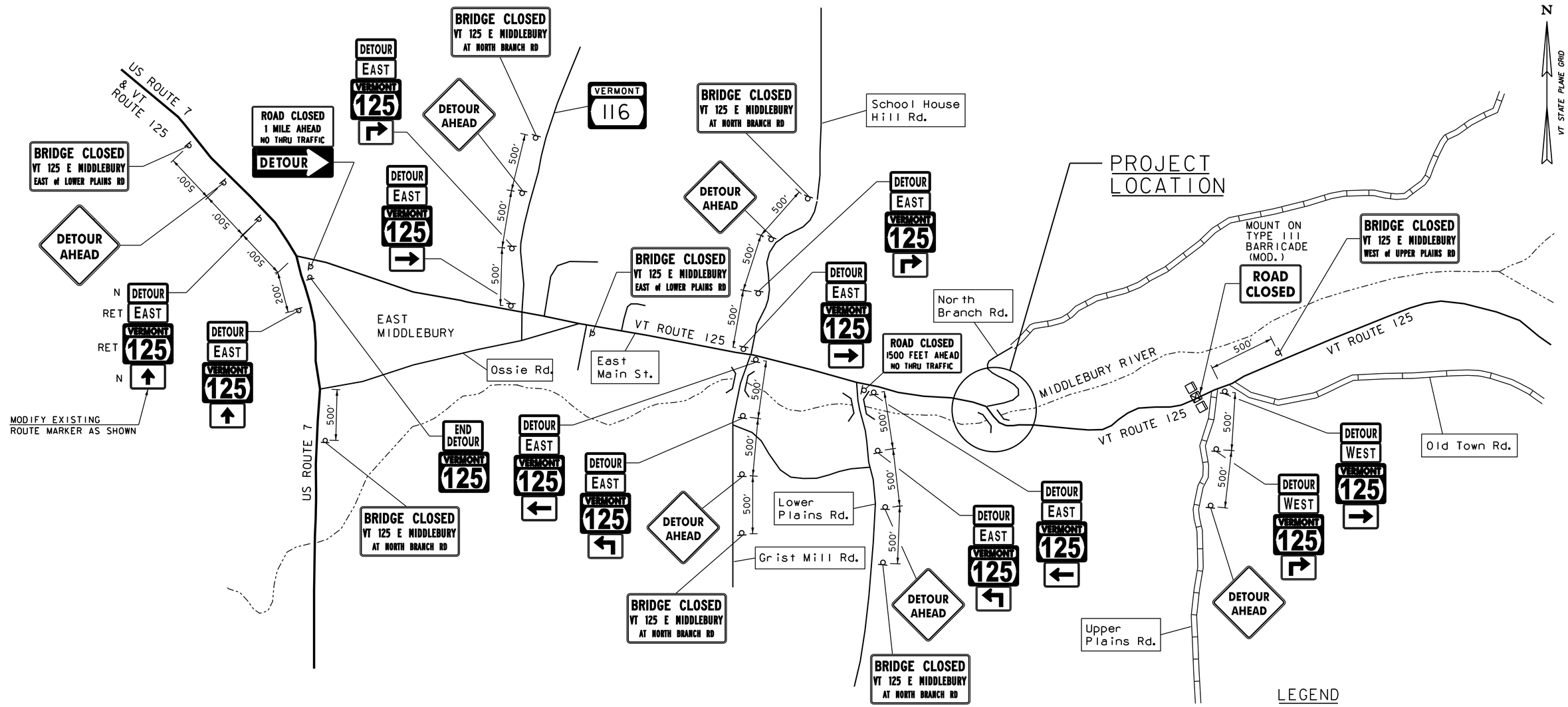

DETAIL A

NOT TO SCALE

LEGEND

- ☐ - TYPE III BARRICADE
- ☒ - TYPE III BARRICADE (MOD.)

SIGNING LEGEND

N = NEW

RET = RETAIN

NOTE:

1. THE NUMBER OF TYPE III BARRICADES AND OTHER TRAFFIC CONTROL DEVICES SHOWN ARE FOR ILLUSTRATIVE PURPOSES ONLY. THE ACTUAL NUMBER REQUIRED ARE TO BE DETERMINED BASED ON INDIVIDUAL ROADWAY CLOSURE REQUIREMENTS.

VHB Vanasse Hangen Brustlin, Inc.

PROJECT NAME: MIDDLEBURY	
PROJECT NUMBER: RS 0174(8)	
FILE NAME: z78f217detour.dgn	PLOT DATE: 8/27/2013
PROJECT LEADER: M.A. COLGAN	DRAWN BY: B.J. MASSE
DESIGNED BY: M.D. SUENNEN	CHECKED BY: S.E. BURBANK
TRAFFIC CONTROL SHEET (2 OF 6)	SHEET 24 OF 104

VHB 57438

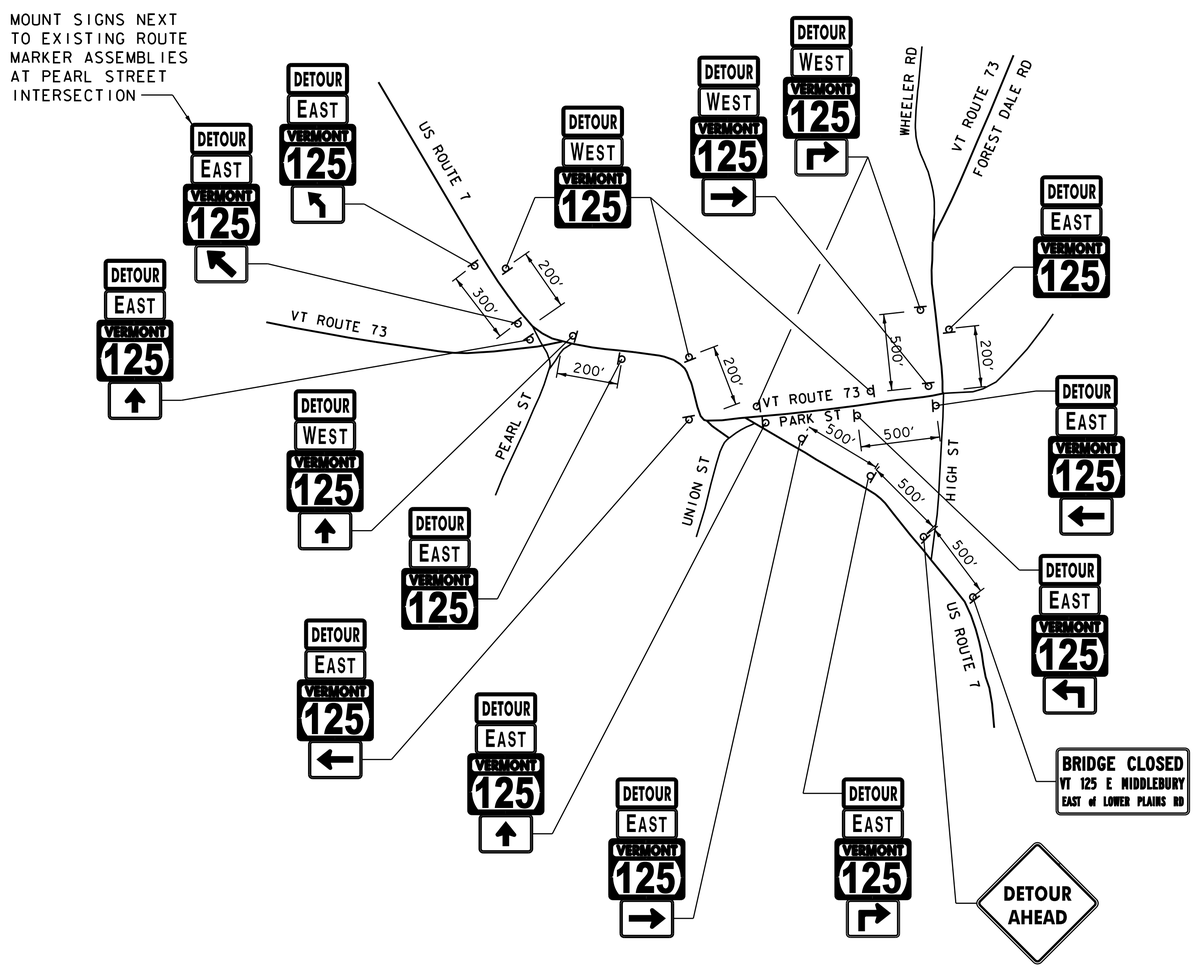

DETAIL B
NOT TO SCALE

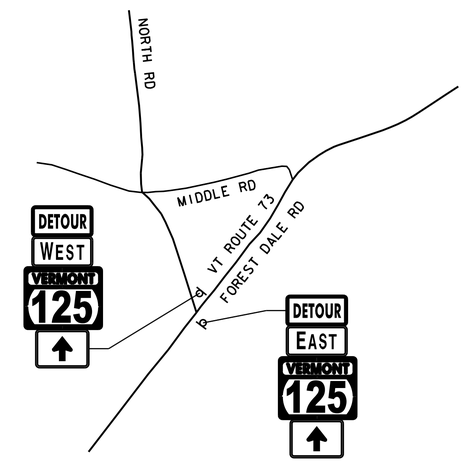

DETAIL C
NOT TO SCALE

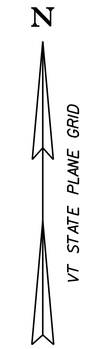

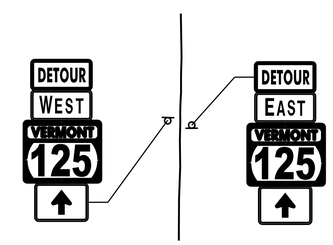

CONFIRMATORY ROUTE MARKER ASSEMBLY
NOT TO SCALE

Vanasse Hangen Brustlin, Inc.

PROJECT NAME: MIDDLEBURY	
PROJECT NUMBER: RS 0174(8)	
FILE NAME: z78f217detour_dts.dgn	PLOT DATE: 8/27/2013
PROJECT LEADER: M.A. COLGAN	DRAWN BY: B.J. MASSE
DESIGNED BY: M.D. SUENNEN	CHECKED BY: S.E. BURBANK
TRAFFIC CONTROL SHEET (3 OF 6)	SHEET 25 OF 104

VHB 57438

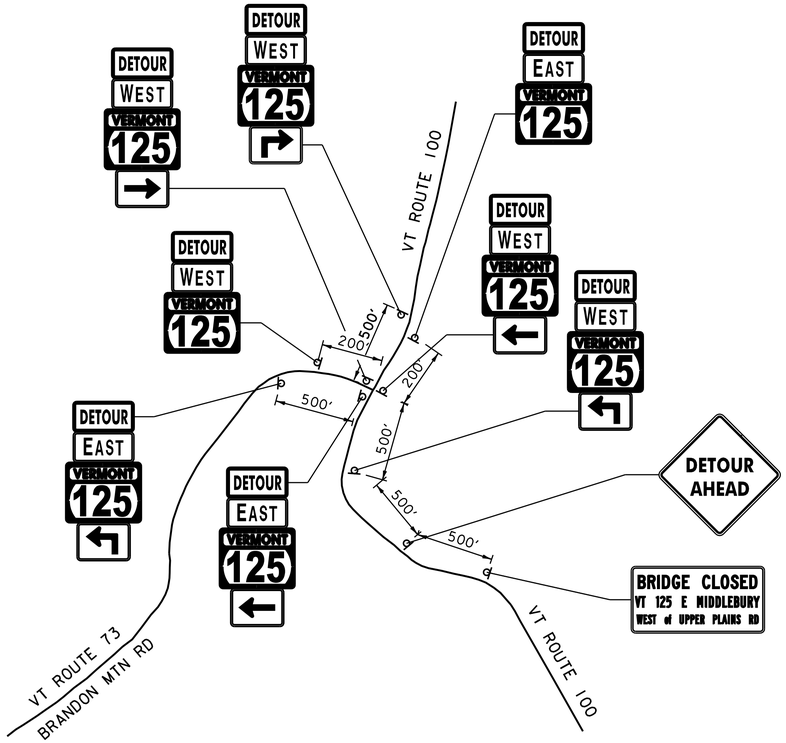

DETAIL D
NOT TO SCALE

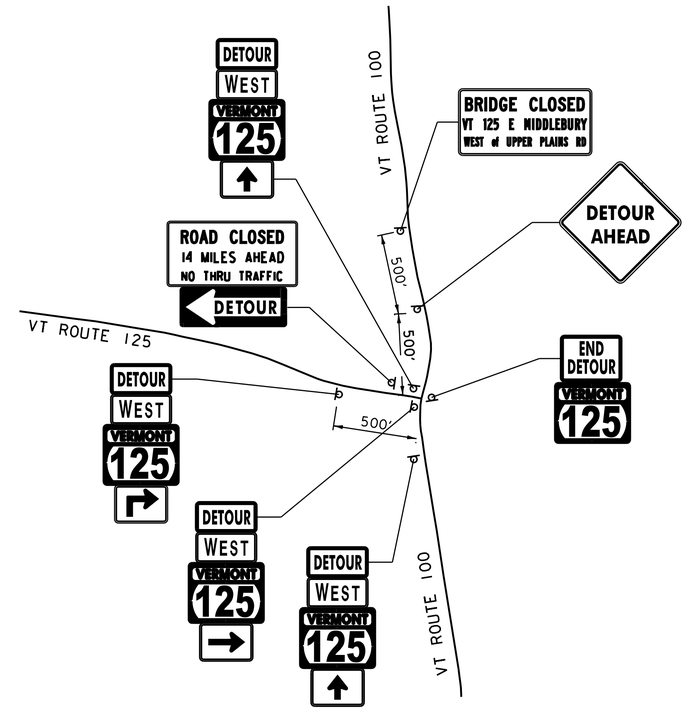

DETAIL E
NOT TO SCALE

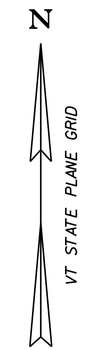

SIGNING LEGEND
N = NEW
RET = RETAIN
R&S = REMOVE AND SALVAGE

Vanasse Hangen Brustlin, Inc.

PROJECT NAME: MIDDLEBURY	
PROJECT NUMBER: RS 0174(8)	
FILE NAME: z78f217detour_dts.dgn	PLOT DATE: 8/27/2013
PROJECT LEADER: M.A. COLGAN	DRAWN BY: B.J. MASSE
DESIGNED BY: M.D. SUENNEN	CHECKED BY: S.E. BURBANK
TRAFFIC CONTROL SHEET (4 OF 6)	SHEET 26 OF 104

VHB 57438

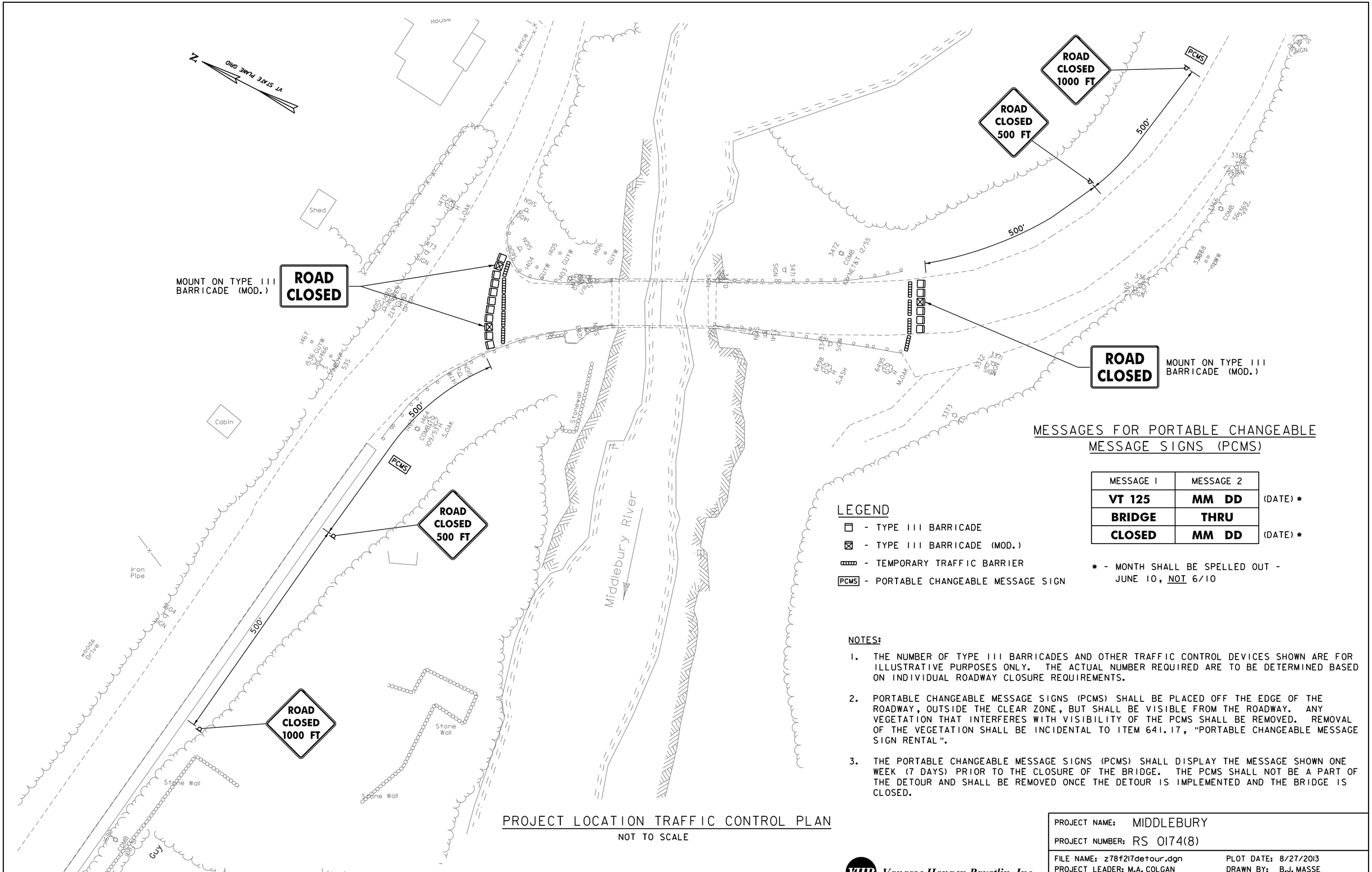

MESSAGES FOR PORTABLE CHANGEABLE MESSAGE SIGNS (PCMS)

MESSAGE 1	MESSAGE 2	
VT 125	**MM DD**	(DATE) *
BRIDGE	**THRU**	
CLOSED	**MM DD**	(DATE) *

* - MONTH SHALL BE SPELLED OUT - JUNE 10, NOT 6/10

LEGEND

- TYPE III BARRICADE
- TYPE III BARRICADE (MOD.)
- TEMPORARY TRAFFIC BARRIER
- PCMS - PORTABLE CHANGEABLE MESSAGE SIGN

NOTES:

1. THE NUMBER OF TYPE III BARRICADES AND OTHER TRAFFIC CONTROL DEVICES SHOWN ARE FOR ILLUSTRATIVE PURPOSES ONLY. THE ACTUAL NUMBER REQUIRED ARE TO BE DETERMINED BASED ON INDIVIDUAL ROADWAY CLOSURE REQUIREMENTS.
2. PORTABLE CHANGEABLE MESSAGE SIGNS (PCMS) SHALL BE PLACED OFF THE EDGE OF THE ROADWAY, OUTSIDE THE CLEAR ZONE, BUT SHALL BE VISIBLE FROM THE ROADWAY. ANY VEGETATION THAT INTERFERES WITH VISIBILITY OF THE PCMS SHALL BE REMOVED. REMOVAL OF THE VEGETATION SHALL BE INCIDENTAL TO ITEM 641.17, "PORTABLE CHANGEABLE MESSAGE SIGN RENTAL".
3. THE PORTABLE CHANGEABLE MESSAGE SIGNS (PCMS) SHALL DISPLAY THE MESSAGE SHOWN ONE WEEK (7 DAYS) PRIOR TO THE CLOSURE OF THE BRIDGE. THE PCMS SHALL NOT BE A PART OF THE DETOUR AND SHALL BE REMOVED ONCE THE DETOUR IS IMPLEMENTED AND THE BRIDGE IS CLOSED.

PROJECT LOCATION TRAFFIC CONTROL PLAN

NOT TO SCALE

VHB Vanasse Hangen Brustlin, Inc.

PROJECT NAME: MIDDLEBURY	
PROJECT NUMBER: RS 0174(8)	
FILE NAME: z78f217detour.dgn	PLOT DATE: 8/27/2013
PROJECT LEADER: M.A. COLGAN	DRAWN BY: B.J. MASSE
DESIGNED BY: M.D. SUENNEN	CHECKED BY: S.E. BURBANK
TRAFFIC CONTROL SHEET (5 OF 6)	SHEET 27 OF 104

VHB 57438

IDENTIFICATION NUMBER	SIZE OF SIGN WIDTH (IN)	SIZE OF SIGN HEIGHT (IN)	TEXT	NUMBER OF SIGNS REQ'D	REMARKS
M1-5	30	24	VERMONT 125	104*	SEE NOTE 6
M3-2	24	12	EAST	54*	SEE NOTE 6
M3-4	24	12	WEST	48*	SEE NOTE 6
M4-8	24	12	DETOUR	102*	MOUNT ABOVE THE M3-2 OR M3-4
M4-8A	24	18	END DETOUR	2	MOUNT ABOVE THE M3-2 OR M3-4
M4-10L	48	18	DETOUR	1	MOUNT ON TWO POSTS W/R11-3A
M4-10R	48	18	DETOUR	1	MOUNT ON TWO POSTS W/R11-3A
M5-1L	21	15		5	MOUNT BELOW THE M1-5
M5-1R	21	15		8	MOUNT BELOW THE M1-5
M5-2L	21	15		1	MOUNT BELOW THE M1-5
M6-1L	21	15		6	MOUNT BELOW THE M1-5
M6-1R	21	15		7	MOUNT BELOW THE M1-5
M6-2L	21	15		1	MOUNT BELOW THE M1-5
M6-3	21	15		69*	MOUNT BELOW THE M1-5
W20-2	48	48	DETOUR AHEAD	9	MOUNT ON TWO POST
W20-3	48	48	ROAD CLOSED 500 FT	2	MOUNT ON TWO POST
W20-3	48	48	ROAD CLOSED 1000 FT	2	MOUNT ON TWO POST

* = NUMBER OF SIGNS REQ'D ASSUMING APPROXIMATELY 30 LOCATIONS OF CONFIRMATORY ROUTE MARKER ASSEMBLY DETAIL

IDENTIFICATION NUMBER	SIZE OF SIGN WIDTH (IN)	SIZE OF SIGN HEIGHT (IN)	TEXT	NUMBER OF SIGNS REQ'D	REMARKS
R11-2	48	30	ROAD CLOSED	3	MOUNT ON TYPE III BARRICADE (MOD.)
SP-1	72	30	BRIDGE CLOSED VT 125 E MIDDLEBURY EAST of LOWER PLAINS RD	3	MOUNT ON TWO POSTS
SP-2	72	30	BRIDGE CLOSED VT 125 E MIDDLEBURY WEST of UPPER PLAINS RD	3	MOUNT ON TWO POSTS
SP-3	72	30	BRIDGE CLOSED VT 125 E MIDDLEBURY AT NORTH BRANCH RD	5	MOUNT ON TWO POSTS
SP-4	72	30	ROAD CLOSED 1500 FEET AHEAD NO THRU TRAFFIC	1	MOUNT ON TWO POSTS
SP-5	72	30	ROAD CLOSED 1 MILE AHEAD NO THRU TRAFFIC	1	MOUNT ON TWO POSTS
SP-6	72	30	ROAD CLOSED 14 MILES AHEAD NO THRU TRAFFIC	1	MOUNT ON TWO POSTS

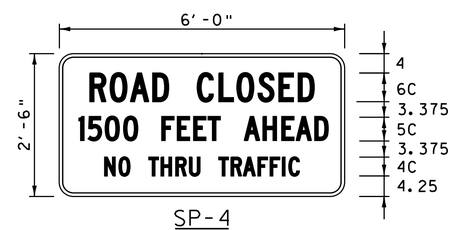

SP-4
NOT TO SCALE

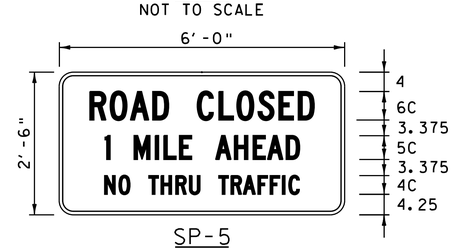

SP-5
NOT TO SCALE

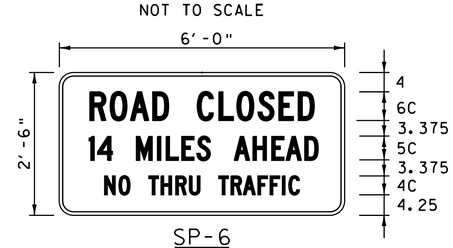

SP-6
NOT TO SCALE

ALL DIMENSIONS ARE IN INCHES.

NOTES:

1. COLORS FOR THE M1-5, M3-2, AND M3-4 SIGNS SHALL MATCH THE COLORS SHOWN ON VTRANS STD. E-136B.
2. COLORS FOR THE M5-1L, M5-1R, M6-1L, M6-1R, AND THE M6-3 SIGNS SHALL BE A BLACK ARROW AND BORDER ON RETROREFLECTIVE ORANGE BACKGROUND.
3. COLORS FOR THE W20-2 AND W20-3 SIGN SHALL MATCH THE COLORS SHOWN ON VTRANS STD. E-100.
4. COLORS FOR THE SP-1, SP-2 AND SP-3 SIGN SHALL BE BLACK TEXT AND BORDER ON RETROREFLECTIVE WHITE BACKGROUND.
5. TWO ORANGE FLAGS (ONE EACH SIDE) SHALL BE PLACED AT THE TOP OF THE R11-3A, SP-1 AND SP-2 SIGNS.
6. THE M1-5, M3-2, AND THE M3-4 SIGNS SHALL BECOME THE PROPERTY OF THE STATE AFTER THEY ARE REMOVED FROM THE DETOUR. THE CONTRACTOR SHALL DELIVER THE SIGNS TO THE STATE AT THE STATE GARAGE. ALL COSTS ASSOCIATED WITH PROVIDING THE SIGNS TO THE STATE SHALL BE INCIDENTAL TO ITEM 641.10 "TRAFFIC CONTROL".
7. COLORS FOR THE SP-4, SP-5, AND SP-6 SIGNS SHALL BE BLACK TEXT AND BORDER ON RETROREFLECTIVE FLUORESCENT WHITE BACKGROUND. TWO ORANGE FLAGS (ONE EACH SIDE) SHALL BE PLACED AT THE TOP OF THE SIGNS.

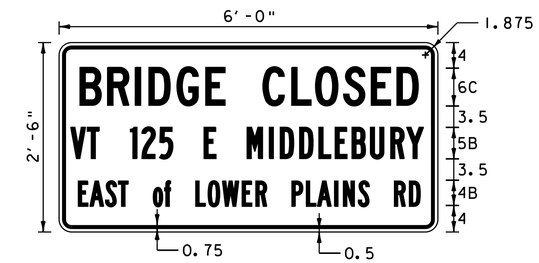

SP-1
NOT TO SCALE

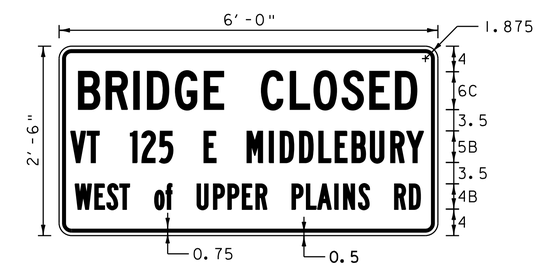

SP-2
NOT TO SCALE

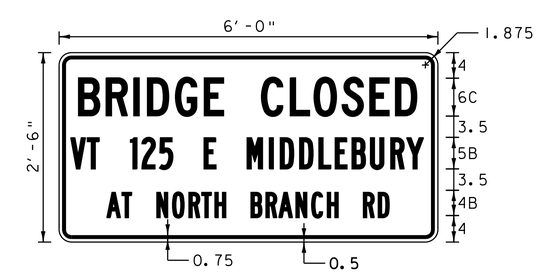

SP-3
NOT TO SCALE

Vanasse Hangen Brustlin, Inc.

PROJECT NAME: MIDDLEBURY
PROJECT NUMBER: RS 0174(8)

FILE NAME: z78f217detour.dgn
PROJECT LEADER: M.A. COLGAN
DESIGNED BY: M.D. SUENNEN
TRAFFIC CONTROL SHEET (6 OF 6)

PLOT DATE: 8/27/2013
DRAWN BY: B.J. MASSE
CHECKED BY: S.E. BURBANK
SHEET 28 OF 104

VHB 57438

CONVENTIONAL SYMBOLS

- POWER POLE
- TELEPHONE POLE
- PROPOSED WATER — PW
- EXISTING FIRE HYDRANT
- PROPOSED WATER VALVE
- EXISTING WATER VALVE — WSO
- PROPOSED UTILITY POLE
- PROPOSED OVERHEAD LINE — AER E&T
- PROPOSED EXPANSION-DEFLECTION JOINT
- PROPOSED ¾" TEST TAP
- PROPOSED COUPLING
- PROPOSED ¾" AIR RELEASE

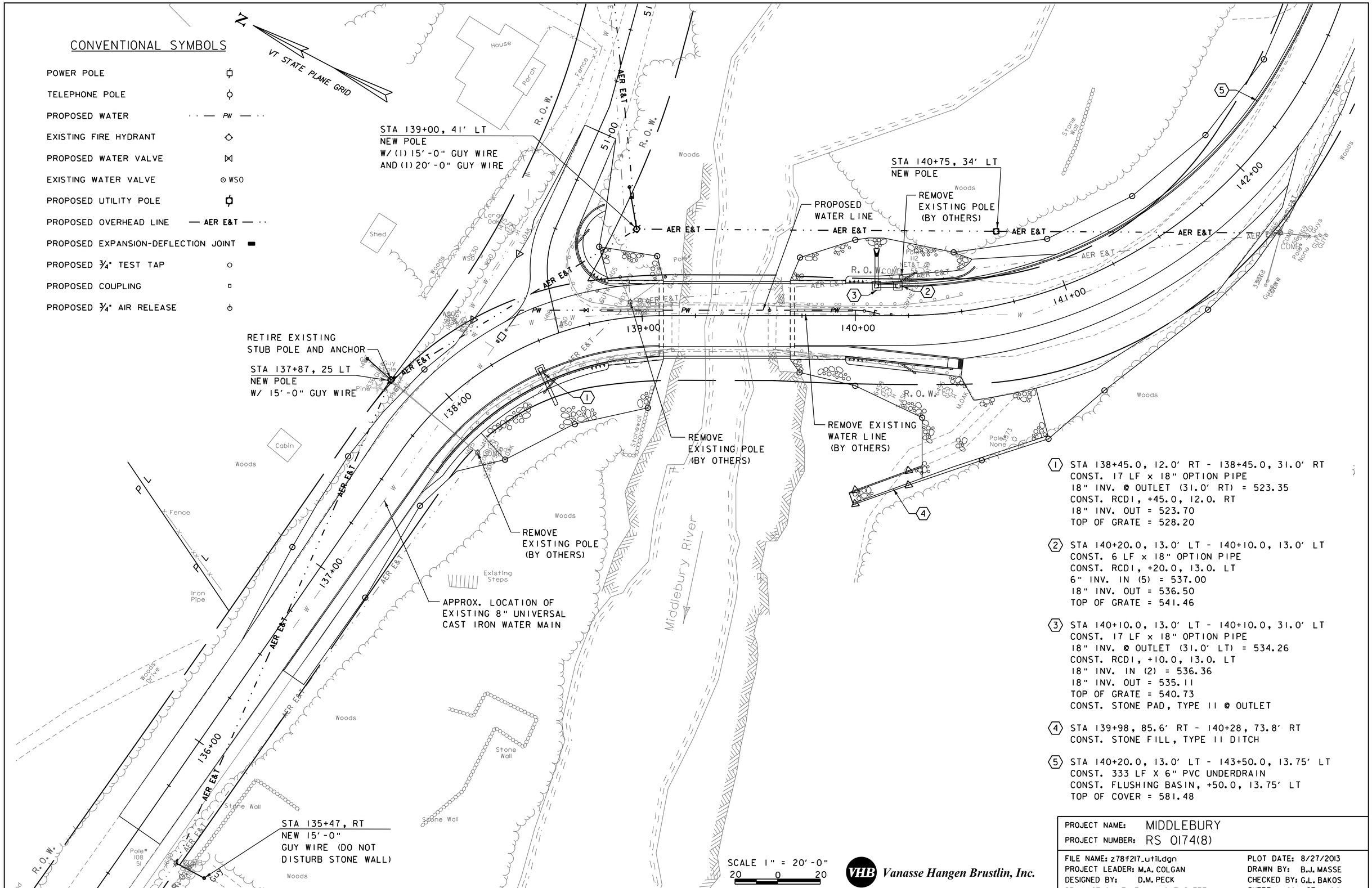

1. STA 138+45.0, 12.0' RT - 138+45.0, 31.0' RT
   CONST. 17 LF x 18" OPTION PIPE
   18" INV. @ OUTLET (31.0' RT) = 523.35
   CONST. RCD1, +45.0, 12.0. RT
   18" INV. OUT = 523.70
   TOP OF GRATE = 528.20

2. STA 140+20.0, 13.0' LT - 140+10.0, 13.0' LT
   CONST. 6 LF x 18" OPTION PIPE
   CONST. RCD1, +20.0, 13.0. LT
   6" INV. IN (5) = 537.00
   18" INV. OUT = 536.50
   TOP OF GRATE = 541.46

3. STA 140+10.0, 13.0' LT - 140+10.0, 31.0' LT
   CONST. 17 LF x 18" OPTION PIPE
   18" INV. @ OUTLET (31.0' LT) = 534.26
   CONST. RCD1, +10.0, 13.0. LT
   18" INV. IN (2) = 536.36
   18" INV. OUT = 535.11
   TOP OF GRATE = 540.73
   CONST. STONE PAD, TYPE II @ OUTLET

4. STA 139+98, 85.6' RT - 140+28, 73.8' RT
   CONST. STONE FILL, TYPE II DITCH

5. STA 140+20.0, 13.0' LT - 143+50.0, 13.75' LT
   CONST. 333 LF X 6" PVC UNDERDRAIN
   CONST. FLUSHING BASIN, +50.0, 13.75' LT
   TOP OF COVER = 581.48

Vanasse Hangen Brustlin, Inc.

PROJECT NAME: MIDDLEBURY	
PROJECT NUMBER: RS 0174(8)	
FILE NAME: z78f217_util.dgn	PLOT DATE: 8/27/2013
PROJECT LEADER: M.A. COLGAN	DRAWN BY: B.J. MASSE
DESIGNED BY: D.M. PECK	CHECKED BY: G.L. BAKOS
DRAINAGE & UTILITY LAYOUT SHEET	SHEET 29 OF 104

VHB 57438

STATE OF VERMONT
AGENCY OF TRANSPORTATION

DRAINAGE DETAIL SHEET #1

LAYOUT CODE #	STATION	STATION	POS.	ASKEW NO. DEG.	INLET/OUTLET TYPE INLET	INLET/OUTLET TYPE OUTLET	DITCH IN	DITCH OUT	PIPE ARCH SPAN IN	PIPE ARCH RISE IN	PIPE ARCH L FT	PIPE D IN	PIPE L FT	ALLOWABLE OPTIONS PCCSP TH	CAAP TH	RCP CL	CSP TH	CPEP SL	PVC	PIPE ELBOW NO. DEG.	ES EA	DMH EA	CB EA	DI EA	PRCDI	DEPTH DI / DMH FT	CONC CLASS B CY	REINF STEEL LBS	GRATE TYPE	CHAN ELEV EA	CRM CY	TRENCH EXCAVATION EARTH CY	TRENCH EXCAVATION ROCK CY	COMM EXC CY	UNC CHAN EXC CY	STRUCT EXCAV CY	GRAN BKFILL STRUCT CY	GRAN BORR CY	EROS MATT SY	STONE FILL CY	STONE FILL TYPE	MARKER POSTS LT EA	MARKER POSTS RT EA	REMARKS
1	138+45	138+45	RT		RCDI	OUTFALL						18	17	X	X	X		X			1			1		6			E			5.8	2.2			8.5							1	NEW 18" PIPE WITH RCDI. CONSTRUCT END SECTION AT OUTLET.
2	140+20	140+10	LT		RCDI	RCDI						18	6	X	X	X		X						1		6			E			1.5	1.5			8.1								NEW 18" PIPE WITH RCDI.
3	140+10	140+10	LT		RCDI	OUTFALL						18	17	X	X	X		X			1			1		7			E			4.3	1.9			8.1						1		NEW 18" PIPE WITH RCDI. CONSTRUCT END SECTION AT OUTLET.
4	139+98	140+28	RT			OUTFALL																																	12	II			CONSTRUCT STONE FILL, TYPE II DITCH.
5	140+20	143+50	LT			RCDI						6	333						X													46.3	7.0									1		NEW 6" UNDERDRAIN. CONSTRUCT FLUSHING BASIN AT INLET.
												18	40	X	X	X		X			2			3								11.6	5.6			24.7							2	
												6	333						X													46.3	7.0										1	
																													3															TYPE E GRATE
TOTALS																					2			3					3			57.9	12.6			24.7							3	

Vanasse Hangen Brustlin, Inc.

PROJECT	MIDDLBBURY		
PROJECT	RS 0174(8)		
FILE	z78f217_DDS.xls	PLOT	8/16/2013
PROJECT	M.A. COLGAN	DRAWN	C.L. CILLEY
DESIGNED BY:	D.M. PECK	CHECKED	J.A. WHITMORE
DRAINAGE DETAIL SHEET		SHEET	30 OF 104

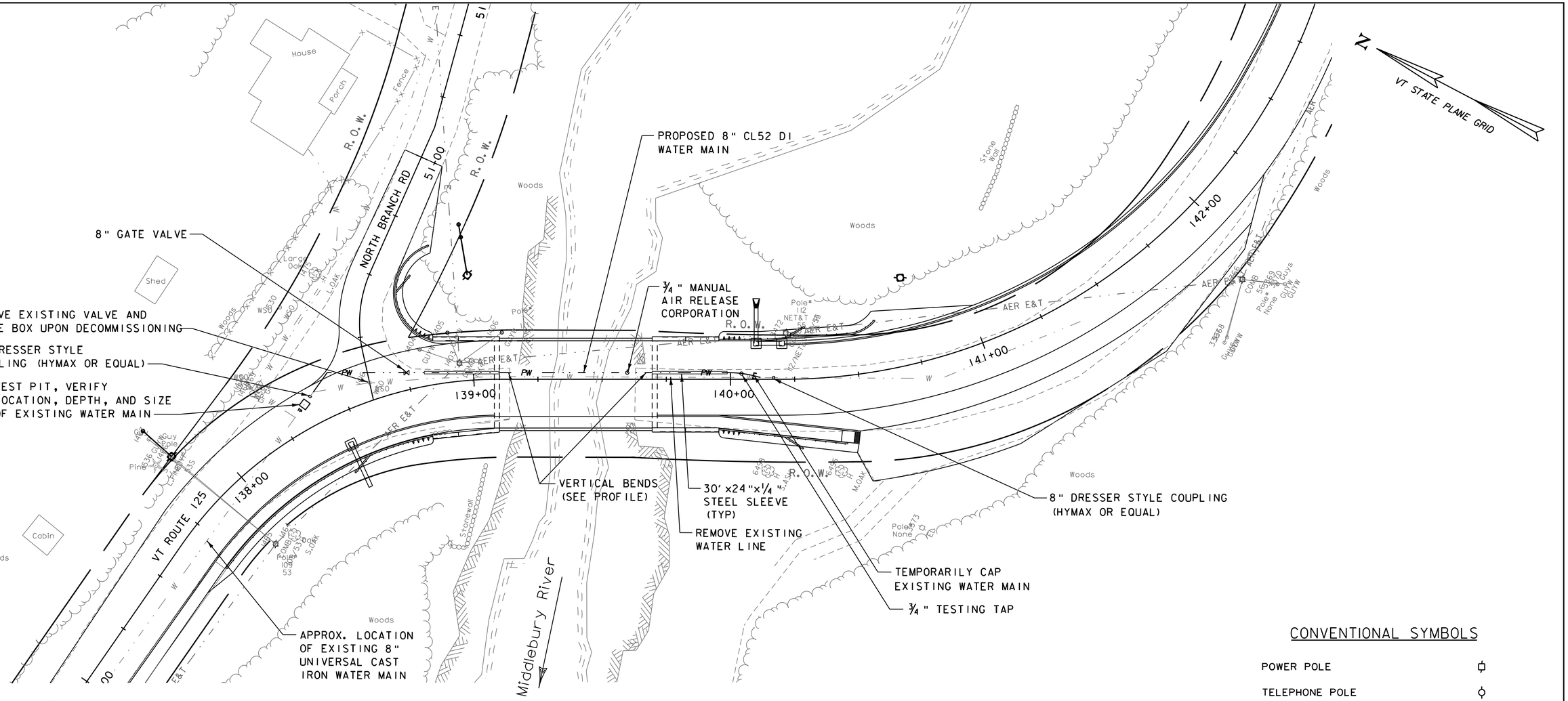

NOTES:

1. ALL WATER MAIN CONSTRUCTION AND TESTING SHALL BE IN ACCORDANCE WITH THE VERMONT WATER SUPPLY RULE, THE VERMONT AGENCY OF TRANSPORTATION STANDARD SPECIFICATIONS SECTION 629, AND THE EAST MIDDLEBURY PRUDENTIAL COMMITTEE STANDARDS AND REQUIREMENTS.

2. ALL EXISTING WATER MAINS, FITTINGS, AND APPURTENANCES TO BE DECOMMISSIONED SHALL BE REMOVED AND PROPERLY DISPOSED OF. ALL COSTS FOR THIS WORK WILL BE CONSIDERED INCIDENTAL TO CONTRACT ITEM 900.645, SPECIAL PROVISION (WATER MAIN ON BRIDGE) (8").

3. INSTALL ALL BURIED WATER MAIN FITTINGS AND APPURTENANCES WITH RESTRAINED MECHANICAL JOINTS AND CONCRETE THRUST BLOCKS.

4. MECHANICAL JOINTS SHALL BE MEGALUG RESTRAINED MECHANICAL JOINTS WITH MINIMUM PRESSURE RATING OF 350 PSI, AS MANUFACTURED BY EBAA IRON WORKS, INC.

5. CONTRACTOR TO COORDINATE HANGER SPACING, LOCATIONS, AND HARDWARE.

6. CONTRACTOR TO CONFIRM ALL PIPE LENGTHS AND FITTINGS BASED ON FIELD CONDITIONS BEFORE ORDERING.

7. CONTRACTOR TO SUBMIT DIMENSIONS, LOCATIONS, AND MANUFACTURER'S INFORMATION FOR ALL WATER MAIN CONSTRUCTION MATERIALS, INCLUDING PIPE, VALVE, VALVE BOX, FITTINGS, HANGERS, BRACES, AND APPURTENANCES. INCLUDE A DETAILED PLAN OF COMPONENTS, LOCATIONS, AND DIMENSIONS BENEATH THE BRIDGE.

8. ALL COSTS FOR STEEL SLEEVES, INCLUDING CASING SPACERS, SLEEVE DRAINS, LINK SEALS, AND CASING ENDS SHALL BE INCLUDED IN ITEM 900.645, SPECIAL PROVISION (WATER MAIN ON BRIDGE) (8").

9. ALL COSTS FOR DUCTILE IRON PIPE, INCLUDING MECHANICAL JOINTS, COUPLINGS, PIPE HANGER ASSEMBLIES, FITTINGS, AND TESTING SHALL BE INCLUDED IN ITEM 900.645, SPECIAL PROVISION (WATER MAIN ON BRIDGE) (8").

10. ANY DAMAGE TO THE ROADWAY INCURRED DURING INSTALLATION OF THE NEW WATERLINE SHALL BE REPAIRED TO THE ORIGINAL CONDITION. THIS WORK SHALL BE INCIDENTAL TO WATERLINE CONTRACT ITEMS.

CONVENTIONAL SYMBOLS

POWER POLE	
TELEPHONE POLE	
PROPOSED WATER	PW
EXISTING FIRE HYDRANT	
PROPOSED WATER VALVE	
EXISTING WATER VALVE	WSO
PROPOSED UTILITY POLE	
PROPOSED OVERHEAD LINE	AER E&T
PROPOSED EXPANSION JOINT	
PROPOSED ¾" TEST TAP	
PROPOSED COUPLING	
PROPOSED ¾" AIR RELEASE	

SCALE 1" = 20'-0"
20 0 20

VHB Vanasse Hangen Brustlin, Inc.

PROJECT NAME: MIDDLEBURY
PROJECT NUMBER: RS 0174(8)

FILE NAME: z78f217_wtr.dgn
PROJECT LEADER: M.A. COLGAN
DESIGNED BY: T. GINGRAS
WATERLINE LAYOUT SHEET

PLOT DATE: 8/27/2013
DRAWN BY: B.J. MASSE
CHECKED BY: M.J. LEO
SHEET 31 OF 104

VHB 57438

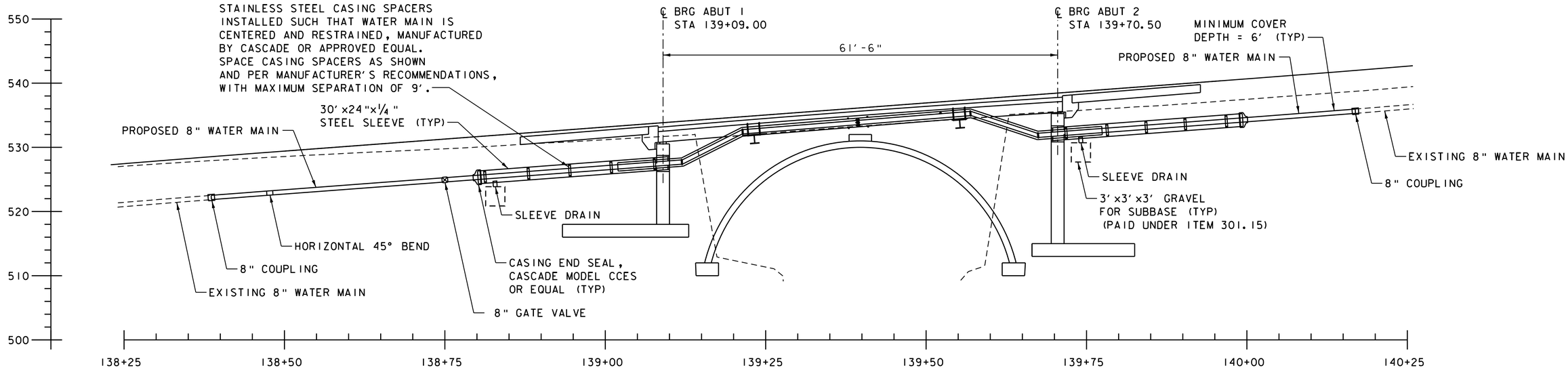

WATER MAIN SECTION

SCALE 1/8" = 1'-0"

NOTES:

1. ALL WATER MAIN BETWEEN STATIONS 138+40-140+20 SHALL BE MJ x MJ PIPE.
2. EXTEND JOINTS AND ENGAGE RESTRAINTS FOR ALL FITTINGS AND CONNECTIONS PRIOR TO PLACING WATER MAIN IN SERVICE.

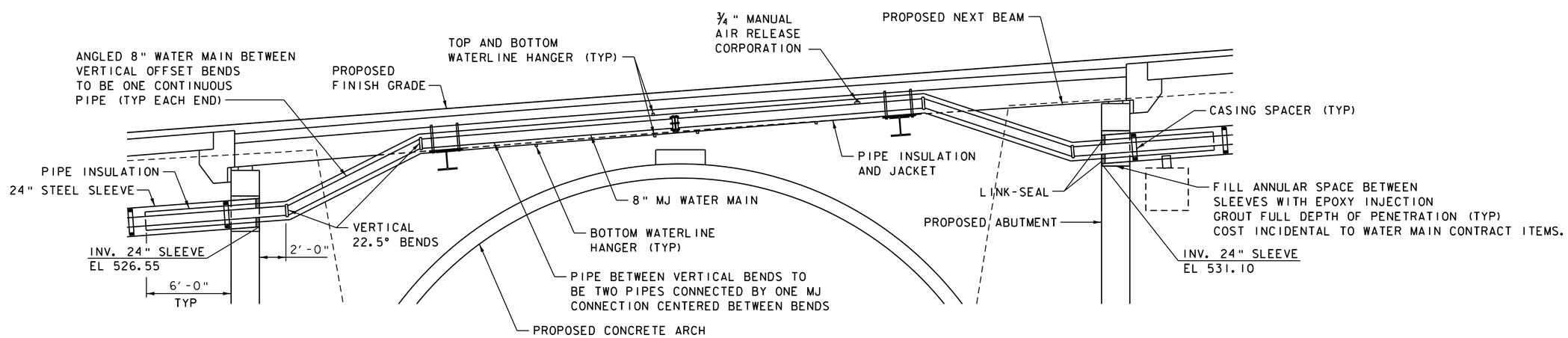

WATER MAIN BRIDGE CROSSING DETAIL

SCALE 1/4" = 1'-0"

Vanasse Hangen Brustlin, Inc.

PROJECT NAME: MIDDLEBURY	
PROJECT NUMBER: RS 0174(8)	
FILE NAME: z78f217_wtr.dgn	PLOT DATE: 8/27/2013
PROJECT LEADER: M.A. COLGAN	DRAWN BY: B.J. MASSE
DESIGNED BY: T. GINGRAS	CHECKED BY: M.J. LEO
WATERLINE DETAILS (1 OF 2)	SHEET 32 OF 104

VHB 57438

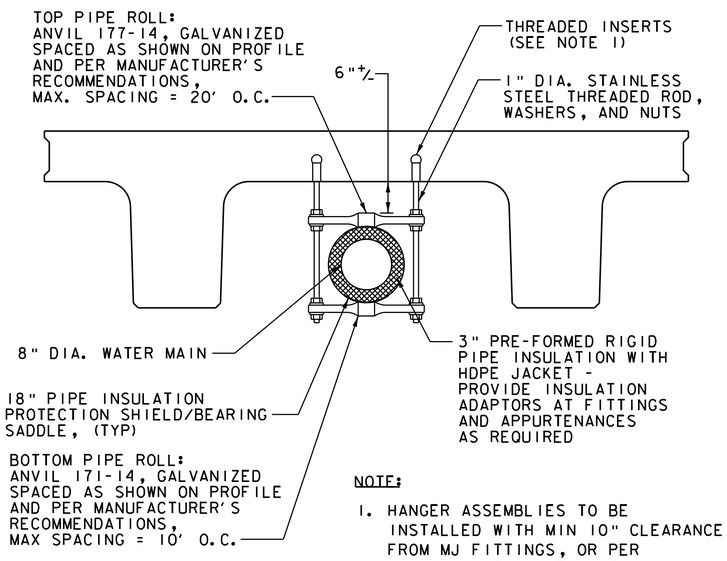

NOTE:

1. HANGER ASSEMBLIES TO BE INSTALLED WITH MIN 10" CLEARANCE FROM MJ FITTINGS, OR PER MANUFACTURER'S RECOMMENDATIONS.

WATER MAIN HANGER CONNECTION DETAIL

SCALE 1" = 1'-0"

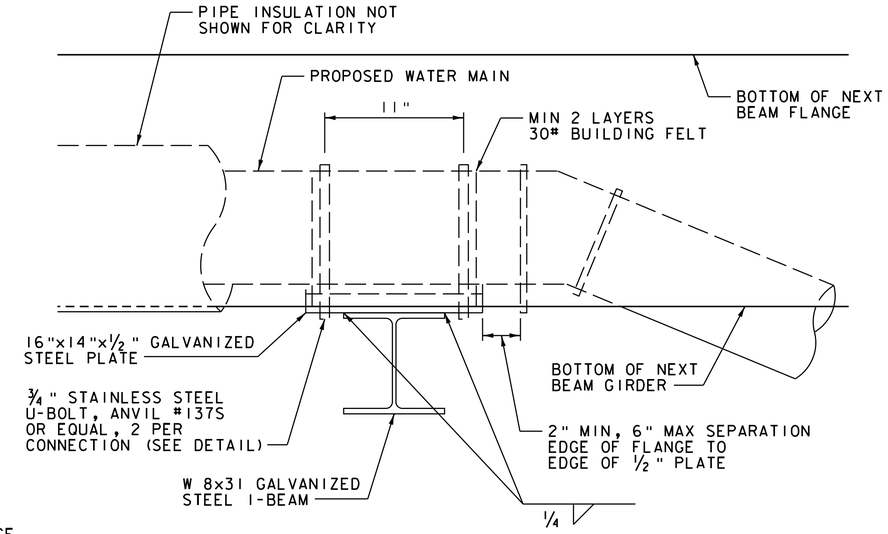

PROFILE VIEW

BRACED CONNECTION DETAIL

SCALE 2" = 1'-0"

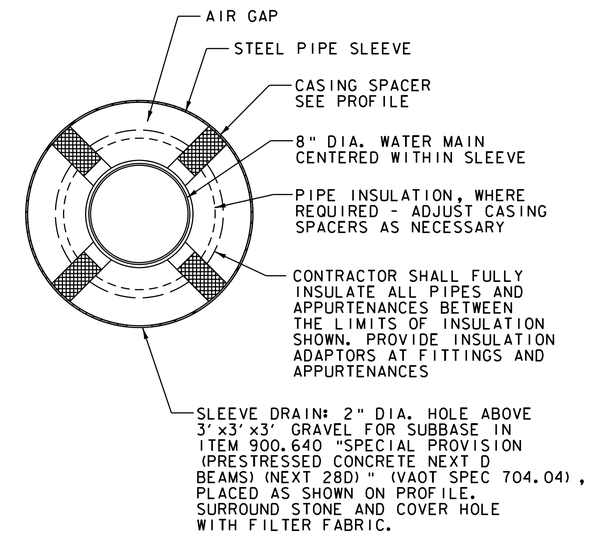

WATER SLEEVE CROSS-SECTION DETAIL

SCALE 2" = 1'-0"

TABLE OF DIMENSIONS

BENDS	B	C	D	E	F	BENDS	B	C	D	E	F
6" 11 1/4°	8"	15"	12"	24"	12"	6" 45°	8"	30"	12"	24"	14"
6" 22 1/2°	8"	19"	12"	24"	13"	6" 90°	8"	30"	12"	24"	27"
8" 11 1/4°	8"	20"	12"	24"	12"	8" 45°	8"	30"	12"	24"	24"
8" 22 1/2°	8"	22"	12"	24"	17"	8" 90°	8"	38"	12"	24"	36"
12" 11 1/4°	8"	30"	12"	24"	15"	12" 45°	8"	40"	12"	24"	40"
12" 22 1/2°	8"	35"	12"	24"	25"	12" 90°	8"	60"	12"	24"	52"

BENDS

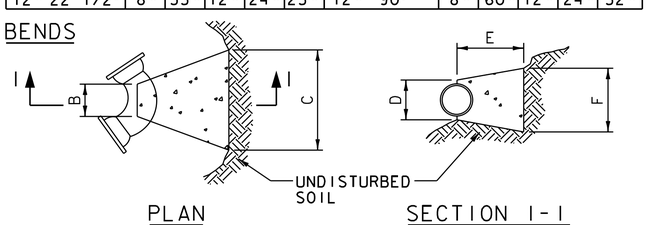

PLAN

SECTION 1-1

TABLE OF DIMENSIONS

TEES	G	H	I	J	TEES	G	H	I	J
6"x 6"x 6"	12"	24"	24"	18"	12"x 12"x 6"	12"	24"	24"	18"
8"x 8"x 6"	12"	24"	24"	18"	12"x 12"x 8"	12"	24"	24"	24"
8"x 8"x 8"	12"	24"	24"	24"	12"x 12"x 12"	12"	36"	24"	36"

TEES

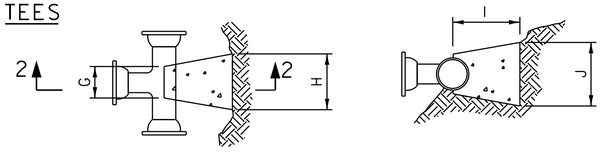

PLAN

SECTION 2-2

CONCRETE THRUST BLOCK

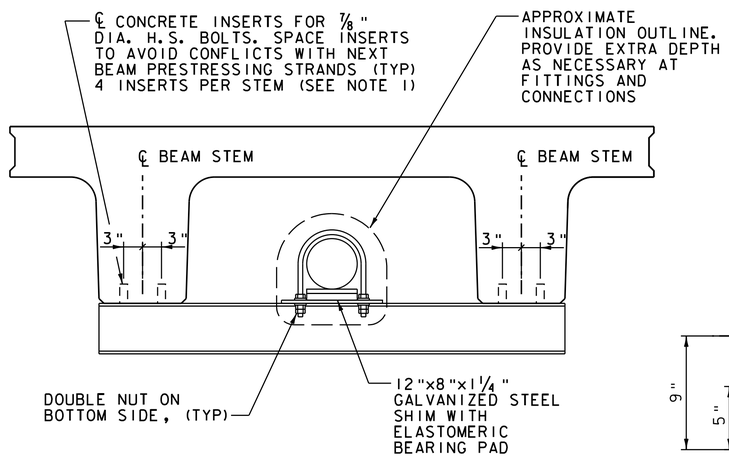

SECTION VIEW

BRACED CONNECTION DETAIL

SCALE 1" = 1'-0"

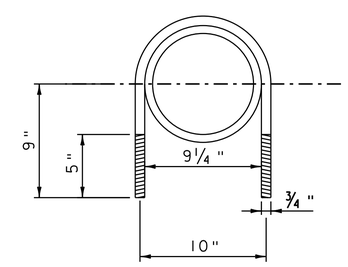

ANVIL 137S, OR EQUAL

STAINLESS STEEL

NOT TO SCALE

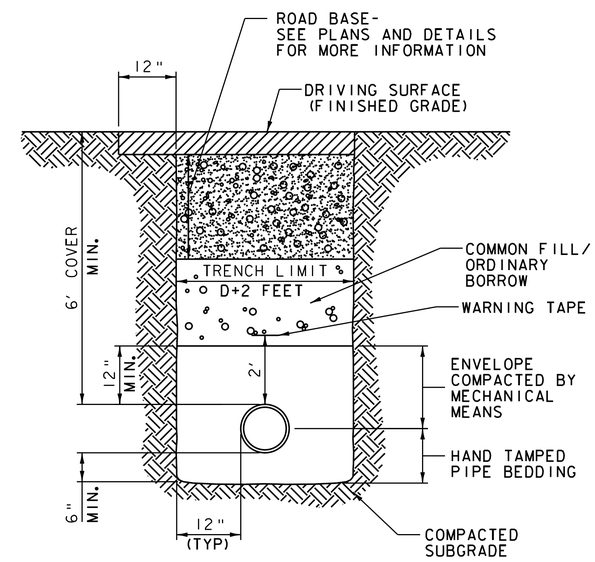

WATER TRENCH DETAIL

NOT TO SCALE

NOTES:

1. ALL COSTS FOR THREADED INSERTS INCLUDED IN ITEM 900.640 "SPECIAL PROVISION (PRESTRESSED CONCRETE NEXT D BEAMS) (NEXT 28D)"
2. PROVIDE BLOCKS FOR ALL BURIED TAPPING SLEEVES, DEAD ENDS, GATE VALVES, HORIZONTAL BENDS, AND VERTICAL BENDS (SAME SIZE AS REQUIRED FOR TEES). PROVIDE ANCHOR RODS AT VERTICAL BENDS AND GATE VALVES.
3. CONCRETE SHALL NOT BE PLACED AGAINST PIPE BEYOND FITTING.
4. CONCRETE SHALL BE CONCRETE CLASS C, 3000 PSI.

Vanasse Hangen Brustlin, Inc.

PROJECT NAME: MIDDLEBURY	
PROJECT NUMBER: RS 0174(8)	
FILE NAME: z78f217_wtr.dgn	PLOT DATE: 8/27/2013
PROJECT LEADER: M.A. COLGAN	DRAWN BY: B.J. MASSE
DESIGNED BY: T. GINGRAS	CHECKED BY: M.J. LEO
WATERLINE DETAILS (2 OF 2)	SHEET 33 OF 104

DURABLE 4 INCH WHITE LINE
STA 135+50 - STA 135+90 LT & RT

DURABLE 4 INCH YELLOW LINE
STA 135+50 - STA 135+90 LT & RT

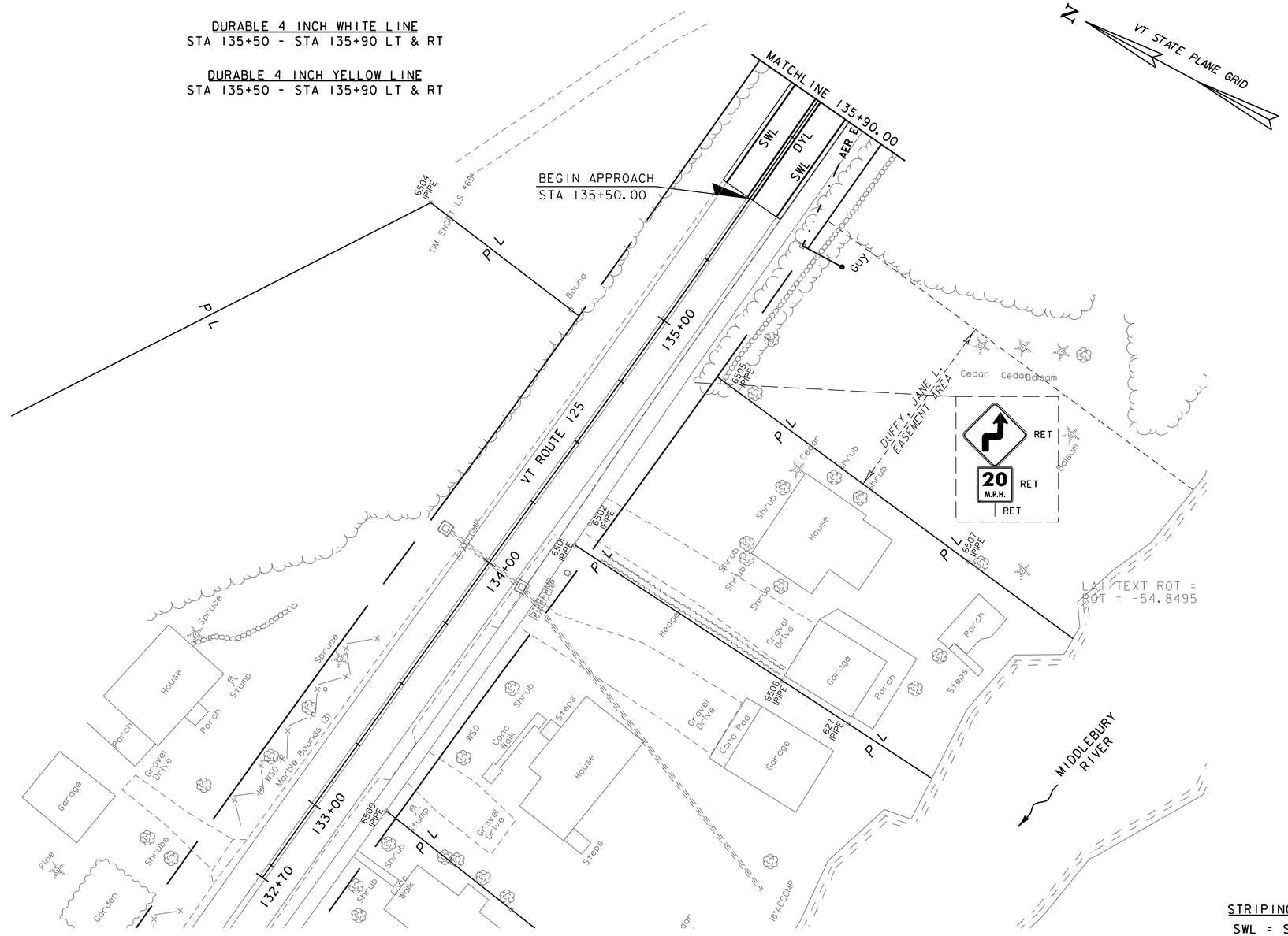

PLAN
SCALE 1" = 20'-0
20 0 20

STRIPING LEGEND
SWL = SINGLE WHITE LINE
DYL = DOUBLE YELLOW LINE

SIGNING LEGEND
N = NEW
R = REMOVE
RET = RETAIN

PROJECT NAME: MIDDLEBURY	
PROJECT NUMBER: RS 0174(8)	
FILE NAME: z78f217bdr_ts.dgn	PLOT DATE: 8/27/2013
PROJECT LEADER: M.A. COLGAN	DRAWN BY: J.A. ROBERT
DESIGNED BY: J.A. ROBERT	CHECKED BY: M.D. SUENNEN
TRAFFIC SIGNS & STRIPING (1 OF 3)	SHEET 34 OF 104

VHB Vanasse Hangen Brustlin, Inc.

VHB 57438

REMOVING SIGNS
STA 136+06, RT
STA 138+16, LT
STA 138+26, RT
STA 138+41, LT (2)
STA 138+76, LT
STA 138+82, LT (2)
STA 139+00, LT
STA 139+02, RT
STA 139+63, LT
STA 139+86, RT
STA 139+95, LT
STA 140+16, RT
STA 140+80, RT (2)
STA 141+45, RT (2)

TRAFFIC SIGNS, TYPE A
STA 138+16, LT
STA 138+26, RT
STA 138+52, LT (2)
STA 138+82, LT (2)
STA 138+83, LT
STA 139+95, LT
STA 140+16, RT
STA 140+80, RT (2)
STA 141+45, RT (2)

DURABLE 4 INCH WHITE LINE
STA 135+90 - STA 138+40, LT
STA 138+90 - STA 141+90, LT
STA 135+90 - STA 141+90, RT

DURABLE 4 INCH YELLOW LINE
STA 135+90 - STA 138+45, LT & RT
STA 138+85 - STA 141+90, LT & RT
STA 50+23 - STA 50+73, LT & RT

DURABLE 24 INCH STOP BAR
STA 50+23

STRIPING LEGEND
SWL = SINGLE WHITE LINE
DYL = DOUBLE YELLOW LINE

SIGNING LEGEND
N = NEW
R = REMOVE
RET = RETAIN

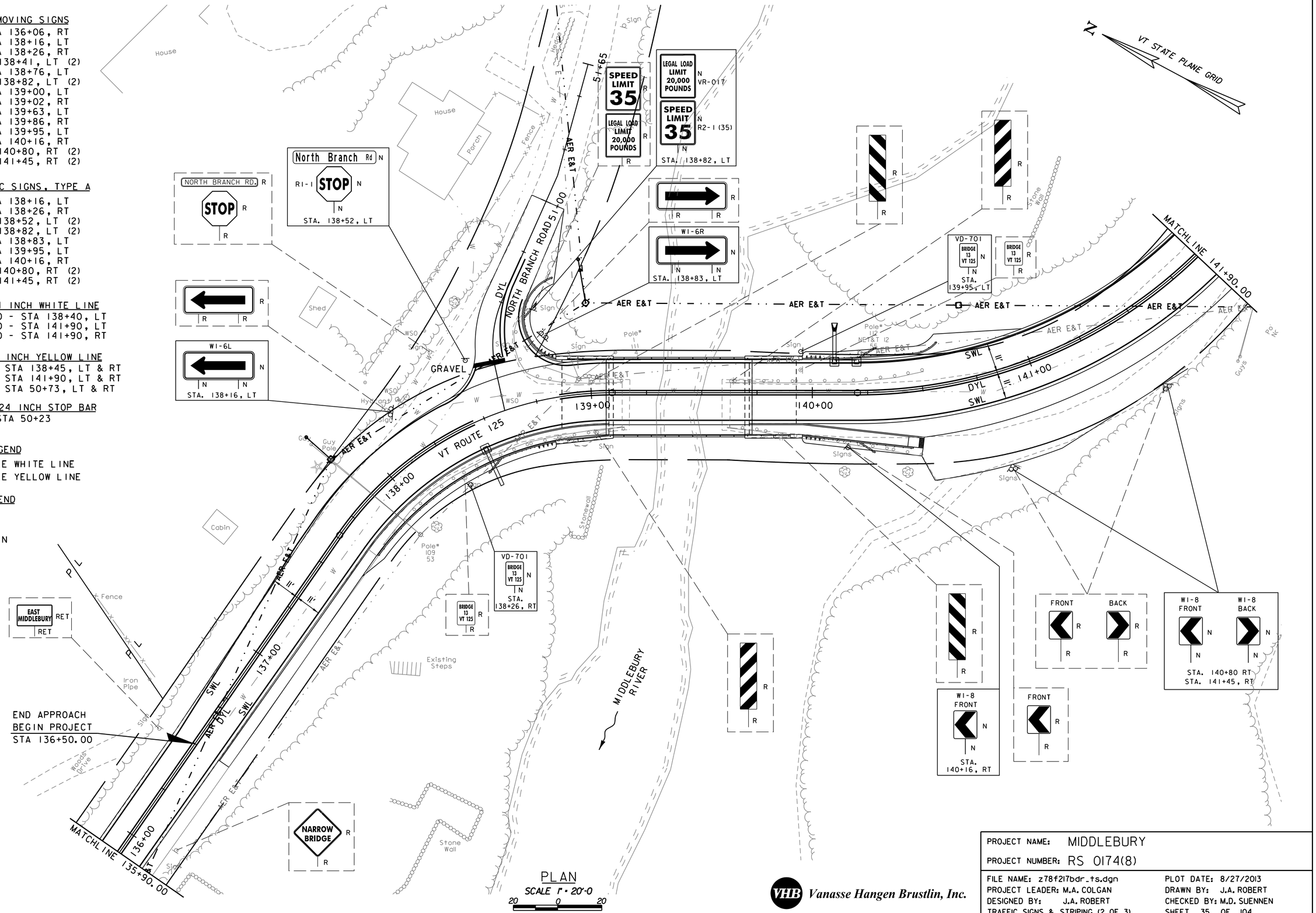

PLAN
SCALE 1" = 20'-0
20 0 20

VHB Vanasse Hangen Brustlin, Inc.

PROJECT NAME: MIDDLEBURY	
PROJECT NUMBER: RS 0174(8)	
FILE NAME: z78f217bdr_ts.dgn	PLOT DATE: 8/27/2013
PROJECT LEADER: M.A. COLGAN	DRAWN BY: J.A. ROBERT
DESIGNED BY: J.A. ROBERT	CHECKED BY: M.D. SUENNEN
TRAFFIC SIGNS & STRIPING (2 OF 3)	SHEET 35 OF 104

VHB 57438

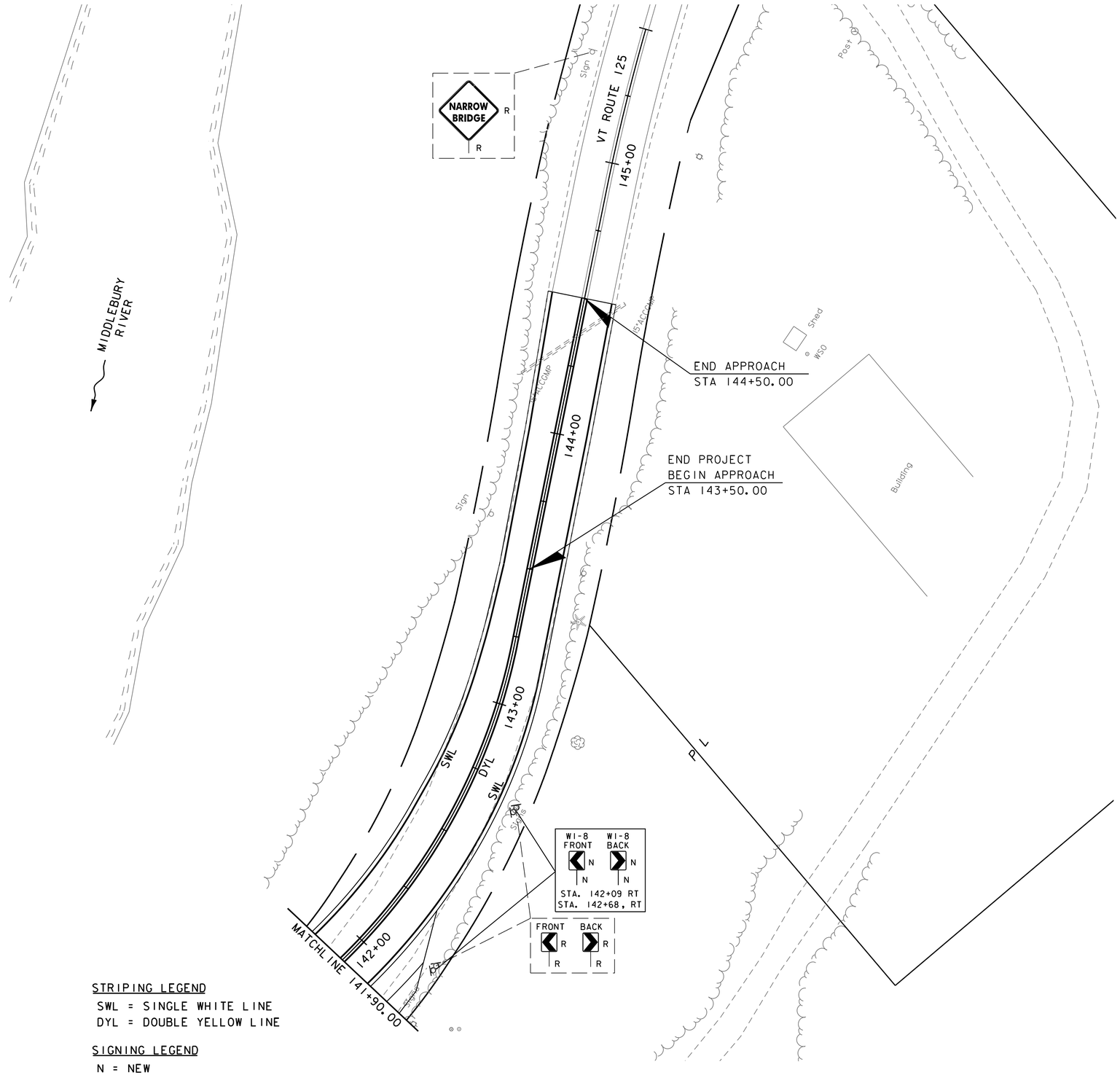

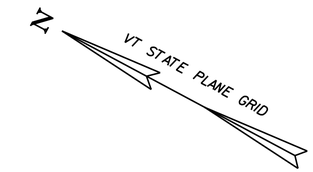

REMOVING SIGNS
STA 142+09, RT (2)
STA 142+68, RT (2)
STA 145+37, LT

TRAFFIC SIGNS, TYPE A
STA 142+09, RT (2)
STA 142+68, RT (2)

DURABLE 4 INCH WHITE LINE
STA 141+90 - STA 144+50 LT & RT

DURABLE 4 INCH YELLOW LINE
STA 141+90 - STA 144+50 LT & RT

STRIPING LEGEND
SWL = SINGLE WHITE LINE
DYL = DOUBLE YELLOW LINE

SIGNING LEGEND
N = NEW
R = REMOVE

PLAN
SCALE 1" = 20'-0
20 0 20

Vanasse Hangen Brustlin, Inc.

PROJECT NAME: MIDDLEBURY	
PROJECT NUMBER: RS 0174(8)	
FILE NAME: z78f217bdr_ts.dgn	PLOT DATE: 8/27/2013
PROJECT LEADER: M.A. COLGAN	DRAWN BY: J.A. ROBERT
DESIGNED BY: J.A. ROBERT	CHECKED BY: M.D. SUENNEN
TRAFFIC SIGNS & STRIPING (3 OF 3)	SHEET 36 OF 104

STATE OF VERMONT
AGENCY OF TRANSPORTATION

TRAFFIC SIGN SUMMARY SHEET

MILE MARKER, STATION, OR SIGN NUMBER	SIGN LEGEND	SIGN DIMENSIONS EA	SIGN DIMENSIONS WIDTH (IN)	SIGN DIMENSIONS HEIGHT (IN)	NEW & SALVAGED SIGNS "A"	NEW & SALVAGED SIGNS "B"	NEW & SALVAGED SIGNS SALV SIGN	NEW & SALVAGED SIGNS SALV TIS	EXIST POST RETAIN	EXIST POST SALVAGE	NEW SIGN POSTS NO. OF POSTS	FLANGED CHANNEL LB/FT 1.12	FLANGED CHANNEL LB/FT 2.0	FLANGED CHANNEL LB/FT 3.0	SQUARE STEEL (IN) LB/FT 1.75 1.88	SQUARE STEEL (IN) LB/FT 2.0 2.42	SQUARE STEEL (IN) LB/FT 2.5 3.35	ANCHOR	SLEEVE	TUBULAR ALUMINUM Ø (IN) LB/FT 3.0 1.3	TUBULAR ALUMINUM Ø (IN) LB/FT 4.0 1.7	TUBULAR ALUMINUM Ø (IN) LB/FT 4.0 MOD 1.7	FOUND-ATION	TUBULAR STEEL Ø (IN) LB/FT 3.0 7.6	TUBULAR STEEL Ø (IN) LB/FT 3.5 9.0	TUBULAR STEEL Ø (IN) LB/FT 4.0 10.8	TUBULAR STEEL Ø (IN) LB/FT 5.0 14.6	W-SHAPE STEEL FTG. SIZE 24"	W-SHAPE STEEL FTG. SIZE 30"	W-SHAPE STEEL WEIGHT	W-SHAPE STEEL POST SIZE	SIGN FRAME REQUIRED	REMARKS	SIGN DETAIL DETAIL ON SHEET NUMBER	SIGN DETAIL STD. SHEET NUMBER
											OPTION ITEMS																								
VT 125																																			
138+16, LT		1	48	24	8.00						2					X		X															W1-6L		SHSM
138+26, RT 139+95, LT		2	6	8	0.67						2				X			X															VD-701		E-134
138+52, LT		1 1	42 30	12 30	3.50 6.25						1					X		X															D3-1 * R1-1 * D3-1 (WHITE ON GREEN WITH BORDER)		SHSM
138+82, LT		1 1	24 24	30 30	5.00 5.00						1					X		X															VR-017 R2-1 (35)		E-141 SHSM
138+83, LT		1	48	24	8.00						2					X		X															W1-6R		SHSM
140+16, RT		1	18	24	3.00						1					X		X															W1-8L		SHSM
140+80, RT 141+45, RT 142+09, RT 142+68, RT		8	18	24	24.00						4					X		X															(4) W1-8L (FRONT) (4) W1-8R (BACK)		SHSM
AVERAGE POST LENGTH = 15 FEET FINAL POST LENGTHS ARE TO BE DETERMINED IN THE FIELD. POST SIZES ARE COMPUTED BASED ON INFORMATION FURNISHED ON THE STANDARD SHEETS AND THE VTRANS "SIGN POST DESIGN GUIDELINE."											FT	FT	FT	FT 30	FT 165	FT		EA	LB	LB	LB		LB	LB	LB	LB						SHSM = STANDARD HIGHWAY SIGNS AND MARKINGS BOOK		
			TOTALS		SF 63.42	SF	EA.	SF			FT				FT 195				LB			EA.	LB				EA.	EA.	LB					

Vanasse Hangen Brustlin, Inc.

PROJECT NAME: MIDDLEBURY
PROJECT NUMBER: RS 0174(8)

FILE NAME: z78f217tss.dgn
PROJECT LEADER: M.A. COLGAN
DESIGNED BY: B.J. MASSE
TRAFFIC SIGN SUMMARY SHEET

PLOT DATE: 8/27/2013
DRAWN BY: B.J. MASSE
CHECKED BY: G.L. BAKOS
SHEET 37 OF 104

SOIL CLASSIFICATION

AASHTO	
A1	Gravel and Sand
A3	Fine Sand
A2	Silty or Clayey Gravel and Sand
A4	Silty Soil - Low Compressibility
A5	Silty Soil - Highly Compressible
A6	Clayey Soil - Low Compressibility
A7	Clayey Soil - Highly Compressible

ROCK QUALITY DESIGNATION

R.Q.D. (%)	ROCK DESCRIPTION
<25	Very Poor
25 to 50	Poor
51 to 75	Fair
76 to 90	Good
>90	Excellent

SHEAR STRENGTH

UNDRAINED SHEAR STRENGTH IN P.S.F.	CONSISTENCY
<250	Very Soft
250-500	Soft
500-1000	Med. Stiff
1000-2000	Stiff
2000-4000	Very Stiff
>4000	Hard

CORRELATION GUIDE OF "N" TO DENSITY/CONSISTENCY

DENSITY (GRANULAR SOILS)		CONSISTENCY (COHESIVE SOILS)	
N	DESCRIPTIVE TERM	N	DESCRIPTIVE TERM
<5	Very Loose	<2	Very Soft
5-10	Loose	2-4	Soft
11-24	Med. Dense	5-8	Med. Stiff
25-50	Dense	9-15	Stiff
>50	Very Dense	16-30	Very Stiff
		31-60	Hard
		>60	Very Hard

COMMONLY USED SYMBOLS

▼	Water Elevation
⊗	Standard Penetration Boring
⊕	Auger Boring
⊙	Rod Sounding
S	Sample
N	Standard Penetration Test Blow Count Per Foot For: 2" O.D. Sampler 1 3/8" I.D. Sampler Hammer Weight Of 140 Lbs. Hammer Fall Of 30"
VS	Field Vane Shear Test
US	Undisturbed Soil Sample
B	Blast
DC	Diamond Core
MD	Mud Drill
WA	Wash Ahead
HSA	Hollow Stem Auger
AX	Core Size 1 1/8"
BX	Core Size 1 5/8"
NX	Core Size 2 1/8"
M	Double Tube Core Barrel Used
LL	Liquid Limit
PL	Plastic Limit
PI	Plasticity Index
NP	Non Plastic
w	Moisture Content (Dry Wgt. Basis)
D	Dry
M	Moist
MTW	Moist To Wet
W	Wet
Sat	Saturated
Bo	Boulder
Gr	Gravel
Sa	Sand
Si	Silt
Cl	Clay
HP	Hardpan
Le	Ledge
NLTD	No Ledge To Depth
CNPF	Can Not Penetrate Further
TLOB	To Ledge Or Boulder
NR	No Recovery
Rec.	Recovery
%Rec.	Percent Recovery
RQD	Rock Quality Designation
CBR	California Bearing Ratio
<	Less Than
>	Greater Than
R	Refusal (N > 100)

COLOR

blk	Black	pnk	Pink
bl	Blue	pu	Purple
brn	Brown	rd	Red
dk	Dark	tn	Tan
gry	Gray	wh	White
gn	Green	yel	Yellow
lt	Light	mltc	Multicolored
or	Orange		

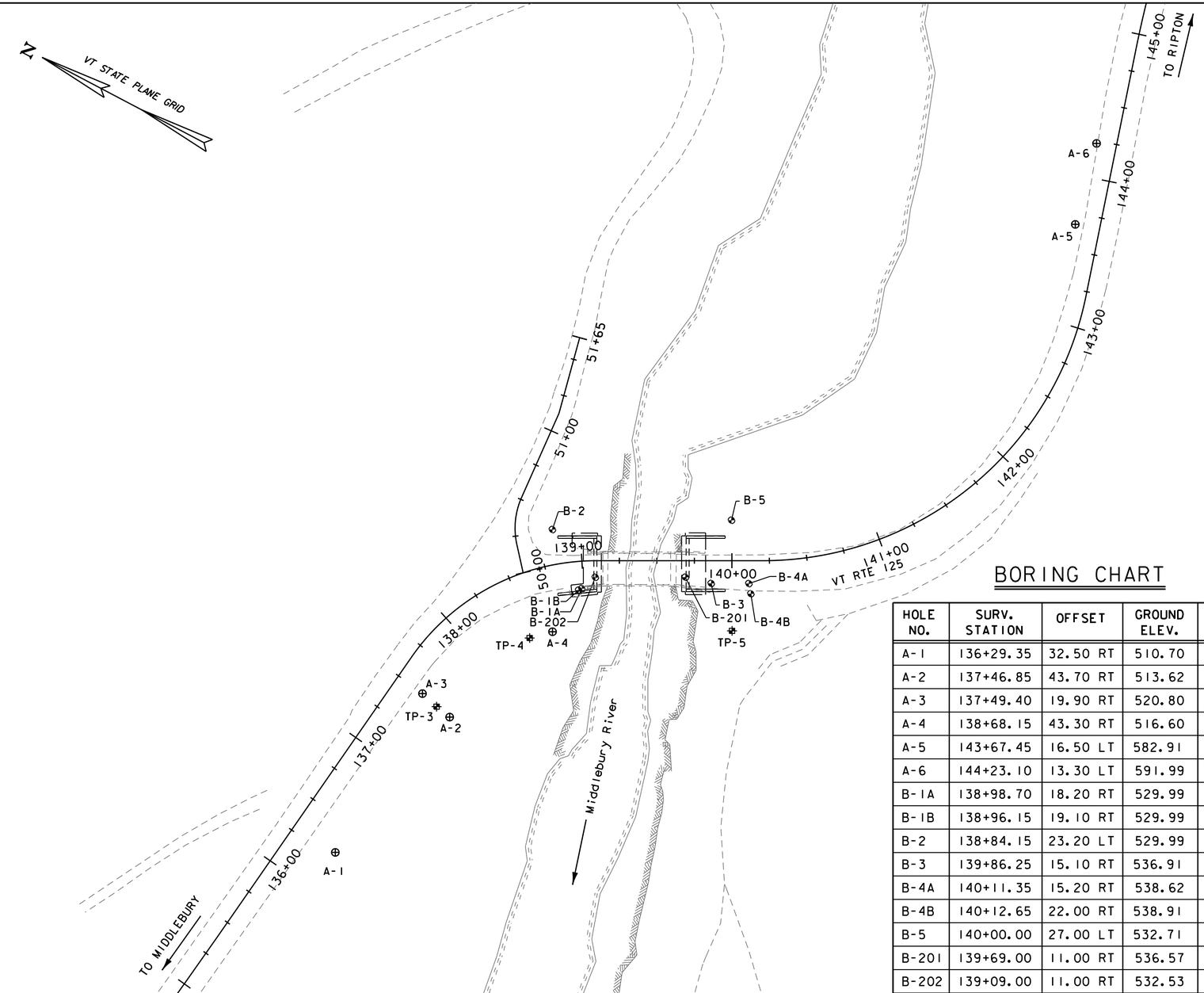

BORING CHART

HOLE NO.	SURV. STATION	OFFSET	GROUND ELEV.	ELEV. TLOB
A-1	136+29.35	32.50 RT	510.70	499.70
A-2	137+46.85	43.70 RT	513.62	506.69
A-3	137+49.40	19.90 RT	520.80	515.29
A-4	138+68.15	43.30 RT	516.60	508.10
A-5	143+67.45	16.50 LT	582.91	NLTD
A-6	144+23.10	13.30 LT	591.99	NLTD
B-1A	138+98.70	18.20 RT	529.99	NLTD
B-1B	138+96.15	19.10 RT	529.99	512.24
B-2	138+84.15	23.20 LT	529.99	514.99
B-3	139+86.25	15.10 RT	536.91	524.57
B-4A	140+11.35	15.20 RT	538.62	NLTD
B-4B	140+12.65	22.00 RT	538.91	NLTD
B-5	140+00.00	27.00 LT	532.71	528.22
B-201	139+69.00	11.00 RT	536.57	515.57
B-202	139+09.00	11.00 RT	532.53	515.23
TP-3	137+48 +/-	33+/- RT	517+/-	NLTD
TP-4	138+46 +/-	42+/- RT	516+/-	507+/-
TP-5	140+00 +/-	47+/- RT	534+/-	532+/-

SCALE 1" = 40'-0"
40 0 40

DEFINITIONS (AASHTO)

BEDROCK (LEDGE) - Rock in its native location of indefinite thickness.

BOULDER - A rock fragment with an average dimension > 12 inches.

COBBLE - Rock fragments with an average dimension between 3 and 12 inches.

GRAVEL - Rounded particles of rock < 3" and > 0.0787" (#10 sieve).

SAND - Particles of rock < 0.0787" (#10 sieve) and > 0.0029" (#200 sieve).

SILT - Soil < 0.0029" (#200 sieve), non or slightly plastic and exhibits no strength when air-dried.

CLAY - Fine grained soil, exhibits plasticity when moist and considerable strength when air-dried.

VARVED - Alternate layers of silt and clay.

HARDPAN - Extremely dense soil, cemented layer, not softened when wet.

MUCK - Soft organic soil (containing > 10% organic material.

MOISTURE CONTENT - Weight of water divided by dry weight of soil.

FLOWING SAND - Granular soil so saturated (loose) that it flows into drill casing during extraction of wash rod.

STRIKE - Angle from magnetic north to line of intersection of bed with a horizontal plane.

DIP - Inclination of bed with a horizontal plane.

GENERAL NOTES

1. The subsurface explorations shown herein were made between 6/23/2003 and 4/16/2010 by the Agency and GeoDesign.
2. Soil and rock classifications, properties and descriptions are based on engineering interpretation from available subsurface information by the Agency and may not necessarily reflect actual variations in subsurface conditions that may be encountered between individual boring or sample locations.
3. Observed water levels and/or conditions indicated are as recorded at the time of exploration and may vary according to the prevailing rainfall, methods of exploration and other factors.
4. Engineering judgment was exercised in preparing the subsurface information presented herein. Analysis and interpretation of subsurface data was performed and interpreted for Agency design and estimating purposes. Presentation of the information in the Contract is intended to provide the Contractor access to the same data available to the Agency. The subsurface information is presented in good faith and is not intended as a substitute for personal investigation, independent interpretation, independent analysis or judgment by the Contractor.
5. Pictorial structure details shown on the boring plan layout or soils profile are for illustrative purposes only and may not accurately portray final contract details.
6. Terminology used on boring logs to describe the hardness, degree of weathering, and spacing of fractures, joints and other discontinuities in the bedrock is defined in the AASHTO Manual on Subsurface Investigations, 1988.

VHB Vanasse Hangen Brustlin, Inc.

PROJECT NAME: MIDDLEBURY

PROJECT NUMBER: RS 0174(8)

FILE NAME: s78f217bor.dgn
PROJECT LEADER: M.A. COLGAN
DESIGNED BY: G.S. GOODRICH
BORING INFORMATION SHEET

PLOT DATE: 8/27/2013
DRAWN BY: B.J. MASSE
CHECKED BY: G.S. GOODRICH
SHEET 38 OF 104

VHB 57438

BORING LOG

GEODESIGN INCORPORATED

Geotechnical Engineers/Environmental Consultants/Construction Engineers
P.O. Box 699, Windsor, VT 05089 — Phone: 802-674-2033/Fax: 802-674-5943
1233 Shelburne Rd., Suite 360, So. Burlington, VT 05403 — Phone: 802-652-5140

Project Name: Route 125 Bridge, RS 0174 (8), Middlebury, VT

Boring No.: A-1 | Page No.: 1 of 1 | File No.: 750-04.1 | Checked By: JEL

Boring Company: M & W Soils Engineering, Inc.
Foreman: Myron Domingue
GeoDesign Rep.: Jason Gaudette
Date Started: June 24, 2003 — Date Finished: June 24, 2003
N. Coordinate: — E. Coordinate:
Ground Surface Elevation (feet): 510.7
Station: 10+79.30 — Offset: 32.5 ft RT

Casing: Type	Casing: I.D.	Sampler: Hammer Wt.	Sampler: Hammer Fall	Rig Type	Other
FJ	3.0 in.	300 lbs	30 in.	B-47 Mobile Drill Track	BX-size Core Barrel
SS	1.38 in.	140 lbs	30 in.		

Groundwater Observations

Date	Depth (ft)	Elev. (ft)	Notes
∓ 6/24/03, 11:45			None

Sample Information

Depth (ft)	Casing Blows/ft	Number	Type	Penetration (inches)	Recovery (inches)	Depth (ft)	Blows / 6 inch interval 0 - 6	6 - 12	12 - 18	18 - 24	Coring Time (min./ft)	Moisture Content (%)
		S1	SS	24	8	0	5	6	5	6		
		S2	SS	16	14	2	9	12	25/4"			
5		S3	SS	1	1	4.2	25/1"					
		C1	C	66	46	6.5					14	
											19	
											2	
											7	
10											21	
											5	
											8	
		C2	C	12	10	11					16	
15												
20												
25												
30												

Strata Description — Depth & Elevation(feet)

- TOPSOIL 510.5
- SAND and GRAVEL FILL — 3.1
- Silty SAND (with Cobbles and Boulders) 507.6 — 11
- Possible BEDROCK (Quartzite) 499.7 — 12
- 498.7 Bottom of Exploration at 12.0 ft

Symbol

Sample Description — Classification System: Burmister

S1): Medium dense. Top 2": Topsoil. Bottom 6": Light to dark brown, fine to coarse SAND, little Silt, little Gravel, dry.

S2): Very dense/Refusal. Top 6": Similar to bottom of S1. Middle 6": Black, fine GRAVEL, some fine to coarse Sand, little Silt. Bottom 2": Light brown, fine to medium SAND, trace to little Silt.

S3): Refusal. Similar to bottom of S2.

C1): Cored through granitic boulders between 6 to 8.3 ft. and 8.8 to 10.2 ft.

C2): Very hard, light pinkish gray to buff, slightly weathered along fracture planes, mostly shattered, very poor quality QUARTZITE (RQD=0%). Fractures typically between 75-90 degrees from horizontal.

Remarks

1) Ground surface elevation measured in the field by GeoDesign using a hand level.
2) Split spoon sampler refusal at 3.3' deep on possible cobble, boulder, or bedrock.
3) Hard solid stem auger resistance observed between 3' and 4.2' depth through boulders estimated between 6" - 12" diameter. Boulder observed near surface (+/- 16" diameter).
4) Solid stem auger refusal at 4.2' deep on possible boulder or bedrock. Used 3" I.D. casing with cutting shoe to advance hole to 6.5' deep. Began coring using BX core barrel.
5) Light gray-brown wash water return observed during coring. No wash water return observed below 7.2' deep (estimated loss down hole at approximately 3-4 gpm).
6) Observed lower resistance between 8.3' to 8.8' deep and 10.2' to 11' deep during coring through probable soil between boulders.

Notes:
1) Stratification Lines Represent Approximate Boundary Between Material Types, Transitions May Be Gradual.
2) Water Level Readings Have Been Made At Times And Under Conditions Stated. Fluctuations Of Groundwater May Occur Due To Other Factors Than Those Present At The Time Measurements Were Made.
A.C. = After coring; N.E. = Not Recorded.
3) Sample Type Coding: A=Auger; C=Core; D=Driven; G=Grab; P3=Piston Sampler; SS=Split Barrel (Split Spoon); ST=Shelby Tube; Geo=GeoProbe V=Vane
WOH/H=Weight of Rod/Hammer
4) Proportions Rock Trace = 1-10%; Little = 10-20%; Some = 20-35%; And = 35-50%
5) Stratification lines represent approximate boundary between material types, transitions may be gradual.

RTE. 125 BRIDGE CONVERSION 750-03.10 (CONVERTED TO IMPERIAL).GPJ GEODESIGN STANDARD .GDT 12/17/09

Boring No.: A-1

BORING LOG

GEODESIGN INCORPORATED

Geotechnical Engineers/Environmental Consultants/Construction Engineers
P.O. Box 699, Windsor, VT 05089 — Phone: 802-674-2033/Fax: 802-674-5943
1233 Shelburne Rd., Suite 360, So. Burlington, VT 05403 — Phone: 802-652-5140

Project Name: Route 125 Bridge, RS 0174 (8), Middlebury, VT

Boring No.: A-2 | Page No.: 1 of 1 | File No.: 750-04.1 | Checked By: JEL

Boring Company: M & W Soils Engineering, Inc.
Foreman: Myron Domingue
GeoDesign Rep.: Jason Gaudette
Date Started: June 23, 2003 — Date Finished: June 23, 2003
N. Coordinate: — E. Coordinate:
Ground Surface Elevation (feet): 513.6
Station: 11+98.00 — Offset: 43.7 ft RT

Casing: Type	Casing: I.D.	Sampler: Hammer Wt.	Sampler: Hammer Fall	Rig Type	Other
Flush	4.0 in.	140 lbs	30 in.	B-47 Mobile Drill Track	NX-size Core Barrel
SS	1.38 in.	140 lbs	30 in.		

Groundwater Observations

Date	Depth (ft)	Elev. (ft)	Notes
∓ 6/23/03, 11:30			None

Sample Information

Depth (ft)	Casing Blows/ft	Number	Type	Penetration (inches)	Recovery (inches)	Depth (ft)	Blows / 6 inch interval 0 - 6	6 - 12	12 - 18	18 - 24	Coring Time (min./ft)	Moisture Content (%)
		S1	SS	24	10	0	1	2	5	9		
		S2	SS	11	5	2	25	50/5"				
5		S3	SS	10	7	4	24	41/4"				
		C1	C	32	32	6.9					10	
											14	
10											24	
15												
20												
25												
30												

Strata Description — Depth & Elevation(feet)

- TOPSOIL 513.1
- SAND and GRAVEL FILL (with Boulders) — 6.9
- Possible BEDROCK (Quartzite) 506.7 — 9.6
- 504.0 Bottom of Exploration at 9.6 ft

Symbol

Sample Description — Classification System: Burmister

S1): Loose. Top 6": Black, SILT and Fine SAND, with roots and root fibers. Bottom 4": Light brown, fine to medium SAND, little Silt, moist.

S2): Refusal. Similar to bottom of S1, with 0.8" piece of gray Gravel in spoon tip.

S3): Refusal. Light brown, fine to coarse SAND, little Silt, with fractured/pulverized beige brown rock pieces, dry.

C1): Very hard, light gray to buff, slightly weathered orange-brown along fracture surfaces, very closely jointed, very poor quality QUARTZITE (RQD=12%). Fractures typically <15 and 75-80 degrees from horizontal.

Remarks

1) Ground surface elevation estimated in the field by GeoDesign using a hand level.
2) Split spoon sampler refusals observed at 3' and 4.8' deep on possible free root, cobble, or boulder.
3) Four solid stem auger refusals (between 2.5' and 4' deep) encountered prior to advancing borehole to 7' deep. Light to dark brown, fine to coarse Sand and Gravel, little Silt observed from solid stem auger cuttings.
4) Drillers estimate boulders 12" to 16" nominal diameter. Light gray brown Silt and fine Sand (powder) observed from solid stem auger cuttings while advancing through 6.5' deep. Light gray rock chips 1/4" to 1/2" in size.
5) Solid stem auger refusal at 7' deep on possible boulder or bedrock. Installed 4" I.D. casing and began coring. No water loss observed.

Notes:
1) Stratification Lines Represent Approximate Boundary Between Material Types, Transitions May Be Gradual.
2) Water Level Readings Have Been Made At Times And Under Conditions Stated. Fluctuations Of Groundwater May Occur Due To Other Factors Than Those Present At The Time Measurements Were Made.
A.C. = After coring; N.E. = Not Recorded.
3) Sample Type Coding: A=Auger; C=Core; D=Driven; G=Grab; P3=Piston Sampler; SS=Split Barrel (Split Spoon); ST=Shelby Tube; Geo=GeoProbe V=Vane
WOH/H=Weight of Rod/Hammer
4) Proportions Rock Trace = 1-10%; Little = 10-20%; Some = 20-35%; And = 35-50%
5) Stratification lines represent approximate boundary between material types, transitions may be gradual.

RTE. 125 BRIDGE CONVERSION 750-03.10 (CONVERTED TO IMPERIAL).GPJ GEODESIGN STANDARD .GDT 12/17/09

Boring No.: A-2

BORING LOG

GEODESIGN INCORPORATED

Geotechnical Engineers/Environmental Consultants/Construction Engineers
P.O. Box 699, Windsor, VT 05089 — Phone: 802-674-2033/Fax: 802-674-5943
1233 Shelburne Rd., Suite 360, So. Burlington, VT 05403 — Phone: 802-652-5140

Project Name: Route 125 Bridge, RS 0174 (8), Middlebury, VT

Boring No.: A-3 | Page No.: 1 of 1 | File No.: 750-04.1 | Checked By: JEL

Boring Company: M & W Soils Engineering, Inc.
Foreman: Myron Domingue
GeoDesign Rep.: Jason Gaudette
Date Started: June 24, 2003 — Date Finished: June 24, 2003
N. Coordinate: — E. Coordinate:
Ground Surface Elevation (feet): 520.8
Station: 12+00.00 — Offset: 19.9 ft RT

Casing: Type	Casing: I.D.	Sampler: Hammer Wt.	Sampler: Hammer Fall	Rig Type	Other
None	N/A in.	N/A	N/A	B-47 Mobile Drill Track	
SS	1.38 in.	140 lbs	30 in.		

Groundwater Observations

Date	Depth (ft)	Elev. (ft)	Notes
∓ 6/24/03, 10:55	5.5	515.3	Moist Soil

Sample Information

Depth (ft)	Casing Blows/ft	Number	Type	Penetration (inches)	Recovery (inches)	Depth (ft)	Blows / 6 inch interval 0 - 6	6 - 12	12 - 18	18 - 24	Coring Time (min./ft)	Moisture Content (%)
		S1	SS	24	11	0	2	2	3	6		
		S2	SS	24	7	2	8	8	23	8		
5		S3	SS	10	6	4.7	3	45/4"				
10												
15												
20												
25												
30												

Strata Description — Depth & Elevation(feet)

- TOPSOIL 520.4
- SAND and GRAVEL FILL (with Boulders) — 5.5
- Possible Boulder or BEDROCK (Quartzite) 515.3 — 6.5
- 514.3 Bottom of Exploration at 6.5 ft

Symbol

Sample Description — Classification System: Burmister

S1): Loose. Top 5": Dark brown TOPSOIL. Bottom 6": Light brown, fine to coarse SAND, some Silt, little Gravel, dry.

S2): Dense, similar to bottom of S1, except with little to trace Silt, and 0.5" thick dark brown to black layer.

S3): Very dense/refusal. Similar to S2, except with trace root fibers, moist.

Remarks

1) Ground surface elevation estimated in the field by GeoDesign using a hand level.
2) Split spoon sampler possibly pushing cobble at 3' deep. Spoon observed "walking" to the north.
3) Cobbles and boulders estimated between 4" to 10" nominal diameter during solid stem auger advance.
4) Split spoon sampler refusal on possible boulder or bedrock at 5.5' deep. Solid stem auger refusal at 6.5' deep.

Notes:
1) Stratification Lines Represent Approximate Boundary Between Material Types, Transitions May Be Gradual.
2) Water Level Readings Have Been Made At Times And Under Conditions Stated. Fluctuations Of Groundwater May Occur Due To Other Factors Than Those Present At The Time Measurements Were Made.
A.C. = After coring; N.E. = Not Recorded.
3) Sample Type Coding: A=Auger; C=Core; D=Driven; G=Grab; P3=Piston Sampler; SS=Split Barrel (Split Spoon); ST=Shelby Tube; Geo=GeoProbe V=Vane
WOH/H=Weight of Rod/Hammer
4) Proportions Rock Trace = 1-10%; Little = 10-20%; Some = 20-35%; And = 35-50%
5) Stratification lines represent approximate boundary between material types, transitions may be gradual.

RTE. 125 BRIDGE CONVERSION 750-03.10 (CONVERTED TO IMPERIAL).GPJ GEODESIGN STANDARD .GDT 12/17/09

Boring No.: A-3

Vanasse Hangen Brustlin, Inc.

PROJECT NAME: MIDDLEBURY	
PROJECT NUMBER: RS 0174(8)	
FILE NAME: z78f217borlog.dgn	PLOT DATE: 8/27/2013
PROJECT LEADER: M.A. COLGAN	DRAWN BY: B.J. MASSE
DESIGNED BY: GEODESIGN	CHECKED BY: G.S. GOODRICH
BORING LOGS (1 OF 7)	SHEET 39 OF 104

BORING LOG — Boring No.: A-4

GEODESIGN INCORPORATED
Geotechnical Engineers/Environmental Consultants/Construction Engineers
P.O. Box 699, Windsor, VT 05089, Phone: 802-674-2033/Fax: 802-674-5943
1233 Shelburne Rd., Suite 360, So. Burlington, VT 05403, Phone: 802-652-5140

Project Name: Route 125 Bridge, RS 0174 (8), Middlebury, VT

Boring No.:	A-4
Page No.:	1 of 1
File No.:	750-04.1
Checked By:	JEL

Boring Company:	M & W Soils Engineering, Inc.
Foreman:	Myron Domingue
GeoDesign Rep.:	Jason Gaudette
Date Started:	June 25, 2003
Date Finished:	June 25, 2003
N. Coordinate:	
E. Coordinate:	
Ground Surface Elevation (feet):	516.6
Station:	13+18.20
Offset:	43.3 ft RT

	Casing:	Sampler:
Type:		SS
I.D.:	in.	1.38 in.
Hammer Wt.:		140 lbs
Hammer Fall:		30 in.
Rig Type:	B-47 Mobile Drill Track	
Other:	NX/BX-size Core Barrels	

Groundwater Observations

Date	Depth (ft)	Elev. (ft)	Notes
6/26/03, 10:05			None

Sample Information

Depth (ft)	Casing Blows/ft	Number	Type	Penetration (inches)	Recovery (inches)	Depth (ft)	Blows 0 - 6	Blows 6 - 12	Blows 12 - 18	Blows 18 - 24	Coring Time (min./ft)	Moisture Content (%)
		S1	SS	24	12	0	3	4	4	9		
		S2	SS	24	14	2	12	8	8	3		
5		S3	SS	24	7	4	6	3	3	1		
		S4	SS	24	5	6	6	10	4	4		
		S5	SS	6	3	8	3	25/0"				
		C1	C	60	50	8.5					19	
10											20	
											22	
											21	
											30	
15												
20												
25												
30												

Strata Description (Depth & Elevation (feet)) / Sample Description (Classification System: Burmister)

Strata Description	Sample Description
TOPSOIL 516.3; SAND and GRAVEL FILL (Black Slag)	S1): Loose. Top 4": TOPSOIL. Bottom 8": Light brown, fine to coarse SAND, little Gravel, little Silt, with black, molten rock fill (slag).
	S2): Medium dense, similar to bottom of S1, except all black, trace Silt.
	S3): Loose, similar to S2.
6.5 — Silty SAND 510.1	S4): Medium dense. Top 2": Similar to S2. Bottom 3": Light brown, fine to medium SAND, trace Silt, trace Gravel.
8.5 — BEDROCK (Quartzite) 508.1	S5): Very dense/refusal. Similar to bottom of S4.
	C1): Very hard, light to dark gray, slightly weathered orange-brown along fracture planes, closely to moderately jointed, fair quality QUARTZITE (RQD=57%). Fractures typically 5 and 70 degrees from the horizontal.
13.5 — Bottom of Exploration at 13.5 ft 503.1	

Remarks:
1) Ground surface elevation measured in the field by GeoDesign using a hand level.
2) Split spoon sampler refusal on possible large boulder or bedrock at 8.5' deep.
3) Used 4.25" I.D. hollow stem auger to case borehole to 8.5' deep. Attempted rock core. Water loss observed downhole estimated at 4 gpm, possibly below auger tip.
4) Switched from using NX to BX size core barrel at 11.5' deep.

Notes:
1) Stratification Lines Represent Approximate Boundary Between Material Types, Transitions May Be Gradual.
2) Water Level Readings Have Been Made At Times And Under Conditions Stated, Fluctuations Of Groundwater May Occur Due To Other Factors Than Those Present At The Time Measurements Were Made.
A.C. = After coring; N.R. = Not Recorded.
3) Sample Type Coding: A=Auger; C=Core; B=Driven; G=Grab; PS=Piston Sampler; SS=Split Barrel (Split Spoon); ST=Shelby Tube; Geo=GeoProbe V=Vane;
WOR/H=Weight of Rod/Hammer
4) Proportions Used: Trace = 1-10%; Little = 10-20%; Some = 20-35%; And = 35-50%
5) Stratification lines represent approximate boundary between material types, transitions may be gradual.

Boring No.: A-4

RTE. 125 BRIDGE CONVERSION 750-03.10 (EDITED TO IMPERICAL).GPJ GEODESIGN STANDARD .GDT 12/17/09

BORING LOG — Boring No.: A-5

GEODESIGN INCORPORATED
Geotechnical Engineers/Environmental Consultants/Construction Engineers
P.O. Box 699, Windsor, VT 05089, Phone: 802-674-2033/Fax: 802-674-5943
1233 Shelburne Rd., Suite 360, So. Burlington, VT 05403, Phone: 802-652-5140

Project Name: Route 125 Bridge, RS 0174 (8), Middlebury, VT

Boring No.:	A-5
Page No.:	1 of 1
File No.:	750-04.1
Checked By:	JEL

Boring Company:	M & W Soils Engineering, Inc.
Foreman:	Myron Domingue
GeoDesign Rep.:	Jason Gaudette
Date Started:	July 8, 2003
Date Finished:	July 8, 2003
N. Coordinate:	
E. Coordinate:	
Ground Surface Elevation (feet):	582.9
Station:	18+17.40
Offset:	16.5 ft LT

	Casing:	Sampler:
Type:	None	SS
I.D.:	N/A in.	1.38 in.
Hammer Wt.:	N/A	140 lbs
Hammer Fall:	N/A	30 in.
Rig Type:	B-47 Mobile Drill Track	
Other:		

Groundwater Observations

Date	Depth (ft)	Elev. (ft)	Notes
7/8/03, 14:30			None

Sample Information

Depth (ft)	Casing Blows/ft	Number	Type	Penetration (inches)	Recovery (inches)	Depth (ft)	Blows 0 - 6	Blows 6 - 12	Blows 12 - 18	Blows 18 - 24	Coring Time (min./ft)	Moisture Content (%)
		S1	SS	24	10	0	1	2	WR	WR		
		S2	SS	24	3	3	2	8	4	2		
5												
		S3	SS	24	4	5	1	3	2	7		
		S4	SS	24	3	7	5	3	3	4		
10		S5	SS	24	5	9	6	4	5	5		
		S6	SS	24	4	11	6	5	9	13		
		S7	SS	24	0	13	14	8	9	10		
15												
		S8	SS	24	12	15	10	25	23	26		
20												
		S9	SS	24	14	20	28	39	22	28		
25												
30												

Strata Description	Sample Description
SAND and GRAVEL FILL	S1): Loose, gray-brown, fine to coarse SAND, little Silt, trace Gravel with roots, dry.
	S2): Medium dense, similar to S1.
	S3): Loose, similar to S1 except moist, with brick pieces. Piece of coarse Gravel stuck in spoon tip.
	S4): Loose, similar to S3 with piece of Gravel stuck in spoon tip.
9 — Silty SAND and GRAVEL 573.9	S5): Loose. Top 4": Similar to S1. Bottom 1": Light orange-brown, fine SAND, some SILT, little Gravel, moist.
	S6): Medium dense, similar to bottom of S5.
	S7): Medium dense, no recovery.
	S8): Dense, beige-brown, fine to medium SAND, little Gravel, trace Silt, piece of pulverized quartzite in center of spoon.
18 — GLACIAL TILL (with Cobbles) 564.9	S9) Very dense, olive brown, similar to S8 except with little Silt.
22 — Bottom of Exploration at 22.0 ft 560.9	

Remarks:
1) Ground surface elevation estimated in the field by GeoDesign using a hand level.
2) Void noted during split spoon sampling between 1' to 3' deep, (i.e., split spoon sampler dropped).
3) Cobbles and boulders (estimated up to 8" diameter) inferred between 3' to 9' deep during solid stem auger advance.
4) Possibly pushing cobble during split spoon sampling between 13' to 14.8' deep
5) Harder drilling resistance observed below 13' deep. Very dense soils inferred between 15' to 20' deep containing coarse gravel and cobbles up to 6" diameter. Split spoon sample attempted at 20' deep.

Notes:
1) Stratification Lines Represent Approximate Boundary Between Material Types, Transitions May Be Gradual.
2) Water Level Readings Have Been Made At Times And Under Conditions Stated, Fluctuations Of Groundwater May Occur Due To Other Factors Than Those Present At The Time Measurements Were Made.
A.C. = After coring; N.R. = Not Recorded.
3) Sample Type Coding: A=Auger; C=Core; B=Driven; G=Grab; PS=Piston Sampler; SS=Split Barrel (Split Spoon); ST=Shelby Tube; Geo=GeoProbe V=Vane;
WOR/H=Weight of Rod/Hammer
4) Proportions Used: Trace = 1-10%; Little = 10-20%; Some = 20-35%; And = 35-50%
5) Stratification lines represent approximate boundary between material types, transitions may be gradual.

Boring No.: A-5

RTE. 125 BRIDGE CONVERSION 750-03.10 (EDITED TO IMPERICAL).GPJ GEODESIGN STANDARD .GDT 12/17/09

BORING LOG — Boring No.: A-6

GEODESIGN INCORPORATED
Geotechnical Engineers/Environmental Consultants/Construction Engineers
P.O. Box 699, Windsor, VT 05089, Phone: 802-674-2033/Fax: 802-674-5943
1233 Shelburne Rd., Suite 360, So. Burlington, VT 05403, Phone: 802-652-5140

Project Name: Route 125 Bridge, RS 0174 (8), Middlebury, VT

Boring No.:	A-6
Page No.:	1 of 1
File No.:	750-04.1
Checked By:	JEL

Boring Company:	M & W Soils Engineering, Inc.
Foreman:	Myron Domingue
GeoDesign Rep.:	Jason Gaudette
Date Started:	July 8, 2003
Date Finished:	July 8, 2003
N. Coordinate:	
E. Coordinate:	
Ground Surface Elevation (feet):	592
Station:	18+73.10
Offset:	13.3 ft LT

	Casing:	Sampler:
Type:	None	SS
I.D.:	N/A in.	1.38 in.
Hammer Wt.:	N/A	140 lbs
Hammer Fall:	N/A	30 in.
Rig Type:	B-47 Mobile Drill Track	
Other:		

Groundwater Observations

Date	Depth (ft)	Elev. (ft)	Notes
7/8/03, 13:20	17.0	575.0	Wet Soil

Sample Information

Depth (ft)	Casing Blows/ft	Number	Type	Penetration (inches)	Recovery (inches)	Depth (ft)	Blows 0 - 6	Blows 6 - 12	Blows 12 - 18	Blows 18 - 24	Coring Time (min./ft)	Moisture Content (%)
		S1	SS	24	6	0	2	3	3	2		
		S2	SS	24	6	2	3	4	11	11		
5		S3	SS	24	10	4	6	3	6	11		
		S4	SS	24	12	6	33	10	5	4		
		S5	SS	24	0	8	9	7	4	3		
10												
		S6	SS	24	16	10	9	10	14	16		
		S7	SS	12	8	12	38	45				
15												
		S8	SS	24	14	15	15	29	31	36		
		S9	SS	3	1	17	50/3"					
20												
		S10	SS	24	16	20	22	32	40	35		
25												
30												

Strata Description	Sample Description
SAND and GRAVEL FILL	S1): Loose, dark brown, fine to coarse SAND, some Silt, trace fine Gravel with roots and pine needles.
	S2): Medium dense, similar to S1 with piece of fractured Cobble in spoon tip.
	S3): Loose, light brown to orange, fine to medium SAND, some Silt, little Gravel, moist.
5 — Silty SAND and GRAVEL 587.0	S4): Medium dense, similar to S3 except with coarse Sand, little Gravel and tree roots.
	S5): Medium dense. No recovery.
	S6): Medium dense, light brown, fine to medium SAND, some Silt, little Gravel. Bottom 4": gray-brown with pulverized rock fragments.
12 — GLACIAL TILL (with Cobbles) 580.0	S7): Refusal. Similar to S6 except beige-brown with little Silt.
	S8): Very dense, olive-brown, fine to medium SAND, some Silt, little fine to coarse Gravel, wetter than S7.
	S9): Very dense/Refusal. Similar to S8 with green schistose piece of Gravel in spoon tip.
	S10): Very dense, brown, fine to coarse SAND, some Gravel, little Silt, moist.
22 — Bottom of Exploration at 22.0 ft 570.0	

Remarks:
1) Ground surface elevation estimated in the field by GeoDesign using a hand level.
2) Possibly pushing tree root at 6' deep during split spoon sampling.
3) Cobbles estimated during solid stem auger advance between 6' and 7' deep.
4) Split-spoon refusal on probable boulder at 13' deep. Cobbles/coarse Gravel inferred from drilling distances between 10' and 15' deep.
5) Harder drilling resistance observed below 15' deep through denser soils. Solid stem auger advanced borehole to 20' deep. Attempted split spoon sample.

Notes:
1) Stratification Lines Represent Approximate Boundary Between Material Types, Transitions May Be Gradual.
2) Water Level Readings Have Been Made At Times And Under Conditions Stated, Fluctuations Of Groundwater May Occur Due To Other Factors Than Those Present At The Time Measurements Were Made.
A.C. = After coring; N.R. = Not Recorded.
3) Sample Type Coding: A=Auger; C=Core; B=Driven; G=Grab; PS=Piston Sampler; SS=Split Barrel (Split Spoon); ST=Shelby Tube; Geo=GeoProbe V=Vane;
WOR/H=Weight of Rod/Hammer
4) Proportions Used: Trace = 1-10%; Little = 10-20%; Some = 20-35%; And = 35-50%
5) Stratification lines represent approximate boundary between material types, transitions may be gradual.

Boring No.: A-6

RTE. 125 BRIDGE CONVERSION 750-03.10 (EDITED TO IMPERICAL).GPJ GEODESIGN STANDARD .GDT 12/17/09

TOP OF FOOTING EL = 518.00

BORING LOG — B-1A

GEODESIGN INCORPORATED
Geotechnical Engineers/Environmental Consultants/Construction Engineers
P.O. Box 699, Windsor, VT 05089, Phone: 802-674-2033/Fax: 802-674-5943
1233 Shelburne Rd., Suite 360, So. Burlington, VT 05403, Phone: 802-652-5140

Project Name: Route 125 Bridge, RS 0174 (8), Middlebury, VT

Boring No.: B-1A | Page No.: 1 of 1 | File No.: 750-04.1 | Checked By: JEL

Boring Company: M & W Soils Engineering, Inc.
Foreman: Myron Domingue
GeoDesign Rep.: Jason Gaudette
Date Started: June 30, 2003 | Date Finished: June 30, 2003
N. Coordinate: | E. Coordinate:
Ground Surface Elevation (feet): 530
Station: 13+48.70 | Offset: 18.2 ft RT

	Casing:	Sampler:
Type:	None	SS
I.D.:	N/A in.	1.38 in.
Hammer Wt.:	N/A	140 lbs
Hammer Fall:	N/A	30 in.
Rig Type:	B-47 Mobile Drill Track	
Other:		

Groundwater Observations

Date	Depth (ft)	Elev. (ft)	Notes
6/30/03, 13:45			None

Sample Information

Depth (ft)	Casing Blows/ft	Number	Type	Penetration (inches)	Recovery (inches)	Depth (ft)	0 - 6	6 - 12	12 - 18	18 - 24	Coring Time (min./ft)	Moisture Content (%)
		S1	SS	24	12	1	11	11	12	17		
		S2	SS	24	4	3	17	15	18	24		
5												
		~~S3~~	~~SS~~	~~8~~	~~6~~	~~5.5~~	~~8~~	~~50/2"~~				
10												
15												
20												
25												
30												

Strata Description (Depth & Elevation (feet)):
- Bituminous CONCRETE 529.6
- SAND and GRAVEL FILL (with Cobbles and Boulders)
- 6.2 — Bottom of Exploration at 6.2 ft 523.8

Sample Description — Classification System: Burmister
- S1): Medium dense, light brown, fine to medium SAND, little Gravel, trace to little Silt, dry.
- S2): Medium dense, similar to S1, except darker brown, with coarse Sand and little Silt.
- S3): Very dense / refusal. Top 4": Similar to S1. Bottom 2": Similar to S2, except dark brown to black, moist. Piece of coarse Gravel in spoon tip.

Remarks:
1) Ground surface elevation estimated in the field by GeoDesign using a hand level.
2) Coarse Gravel and Cobbles estimated during solid stem auger advance between 3' and 5.5' deep.
3) Split spoon refusal on possible Cobble, Boulder, or Bedrock at 6' deep. Solid stem auger used to advance hole to 6.2' deep prior to refusal. Borehole location moved 2.5' north – see boring log B-1B.

Notes:
1) Stratification Lines Represent Approximate Boundary Between Material Types, Transitions May Be Gradual.
2) Water Level Readings Have Been Made At Times And Under Conditions Stated, Fluctuations Of Groundwater May Occur Due To Other Factors Than Those Present At The Time Measurements Were Made. A.C. = After coring; N.R. = Not Recorded.
3) Sample Type Coding: A=Auger; C=Core; B=Driven; G=Grab; PS=Piston Sampler; SS=Split Barrel (Split Spoon); ST=Shelby Tube; Geo=GeoProbe V=Vane; WOR/H=Weight of Rod/Hammer
4) Proportions Used: Trace = 1-10%; Little = 10-20%; Some = 20-35%; And = 35-50%
5) Stratification lines represent approximate boundary between material types, transitions may be gradual.

Boring No.: B-1A

RTE. 125 BRIDGE CONVERSION 750-03.10 (EDITED TO IMPERICAL).GPJ GEODESIGN STANDARD .GDT 12/17/09

TOP OF FOOTING EL = 518.00

BORING LOG — B-1B

GEODESIGN INCORPORATED
Geotechnical Engineers/Environmental Consultants/Construction Engineers
P.O. Box 699, Windsor, VT 05089, Phone: 802-674-2033/Fax: 802-674-5943
1233 Shelburne Rd., Suite 360, So. Burlington, VT 05403, Phone: 802-652-5140

Project Name: Route 125 Bridge, RS 0174 (8), Middlebury, VT

Boring No.: B-1B | Page No.: 1 of 1 | File No.: 750-04.1 | Checked By: JEL

Boring Company: M & W Soils Engineering, Inc.
Foreman: Myron Domingue
GeoDesign Rep.: Jason Gaudette
Date Started: June 30, 2003 | Date Finished: June 30, 2003
N. Coordinate: | E. Coordinate:
Ground Surface Elevation (feet): 530
Station: 13+46.20 | Offset: 19.1 ft RT

	Casing:	Sampler:
Type:	FJ	SS
I.D.:	3.0 in.	1.38 in.
Hammer Wt.:	300 lbs	140 lbs
Hammer Fall:	30 in.	30 in.
Rig Type:	B-47 Mobile Drill Track	
Other:	BX-size Core Barrel	

Groundwater Observations

Date	Depth (ft)	Elev. (ft)	Notes
6/30/03, 11:30	12.5	517.5	Wet Soil

Sample Information

Depth (ft)	Casing Blows/ft	Number	Type	Penetration (inches)	Recovery (inches)	Depth (ft)	0 - 6	6 - 12	12 - 18	18 - 24	Coring Time (min./ft)	Moisture Content (%)
5												
		S1	SS	24	8	7	6	4	3	3		
10												
		S2	SS	24	10	10	9	16	16	12		
		S3	SS	18	10	12	52	14	65			
											16	
		~~C1~~	~~C~~	~~12~~	~~9~~	~~13.5~~						
15												
		S4	SS	24	6	15	2	4	5	8		
		S5	SS	9	2	17	10	50/3.5"				
		C2	C	60	57	17.8					14	
											16	
20											38	
											18	
											19	
		C3	C	42	41	22.8					18	
											26	
25											46	
											29	
30												

Strata Description (Depth & Elevation (feet)):
- Bituminous CONCRETE 529.6
- SAND and GRAVEL FILL (with Cobbles and Boulders)
- 13.8 — Silty SAND and GRAVEL 516.2
- 17.8 — BEDROCK (Quartzite) 512.2
- 26.3 — Bottom of Exploration at 26.3 ft 503.7

Sample Description — Classification System: Burmister
- S1): Loose, light brown to black (with 0.5" layer oxidized orange), fine to coarse Sand, little Gray Silt.
- S2): Dense. Top 6": Brown-gray, fine SAND, little Silt, little Gravel, moist. Bottom 4": Dark brown, fine to coarse SAND and GRAVEL, trace to little Silt.
- S3): Very dense, similar to bottom of S2 except with little Silt and piece of black slag, wetter.
- C1): Cored through Cobble (between 13.5' to 13.8' deep) and Boulder (between 14.2' to 14.7' deep).
- S4): Loose, dark brown to gray (with orange red oxidation), layered fine to medium SAND, little Silt, trace Gravel, moist.
- S5): Refusal. Gray rock pieces in spoon tip.
- C2): Very hard, light gray, slightly weathered orange along fracture planes, closely jointed, poor quality QUARTZITE (RQD=47%). Fractures typically <15 and >80 degrees from horizontal. One 1cm thick Phyllite bed noted.
- C3): Similar rock type to C2, except more buff colored and close to very closely jointed, fair quality (RQD=52%). Fractures typically <10 degrees from horizontal.

Remarks:
1) Ground surface elevation estimated in the field using a hand level.
2) Refer to boring log B-1A for soil descriptions above 6.2' deep.
3) Cobbles and small Boulders estimated up to 12" diameter during solid stem auger advance between 3' to 6' deep. Split spoon sample attempted at 7' deep.
4) Cobbles and small boulders estimated up to 12" diameter during solid stem auger advance between 11' and 14' deep. Core C1 recovered cobbles/boulders. Solid stem auger refusal at 17.8' deep. Attempted core C2.
5) Observed complete loss of water during coring C2, possibly below casing (estimated at 4 gpm).

Notes:
1) Stratification Lines Represent Approximate Boundary Between Material Types, Transitions May Be Gradual.
2) Water Level Readings Have Been Made At Times And Under Conditions Stated, Fluctuations Of Groundwater May Occur Due To Other Factors Than Those Present At The Time Measurements Were Made. A.C. = After coring; N.R. = Not Recorded.
3) Sample Type Coding: A=Auger; C=Core; B=Driven; G=Grab; PS=Piston Sampler; SS=Split Barrel (Split Spoon); ST=Shelby Tube; Geo=GeoProbe V=Vane; WOR/H=Weight of Rod/Hammer
4) Proportions Used: Trace = 1-10%; Little = 10-20%; Some = 20-35%; And = 35-50%
5) Stratification lines represent approximate boundary between material types, transitions may be gradual.

Boring No.: B-1B

RTE. 125 BRIDGE CONVERSION 750-03.10 (EDITED TO IMPERICAL).GPJ GEODESIGN STANDARD .GDT 12/17/09

TOP OF FOOTING EL = 518.00

BORING LOG — B-2

GEODESIGN INCORPORATED
Geotechnical Engineers/Environmental Consultants/Construction Engineers
P.O. Box 699, Windsor, VT 05089, Phone: 802-674-2033/Fax: 802-674-5943
1233 Shelburne Rd., Suite 360, So. Burlington, VT 05403, Phone: 802-652-5140

Project Name: Route 125 Bridge, RS 0174 (8), Middlebury, VT

Boring No.: B-2 | Page No.: 1 of 1 | File No.: 750-04.1 | Checked By: JEL

Boring Company: M & W Soils Engineering, Inc.
Foreman: Myron Domingue
GeoDesign Rep.: Jason Gaudette
Date Started: June 26, 2003 | Date Finished: June 27, 2003
N. Coordinate: | E. Coordinate:
Ground Surface Elevation (feet): 530
Station: 13+34.15 | Offset: 23.2 ft LT

	Casing:	Sampler:
Type:	Flush	SS
I.D.:	4.0 in.	1.38 in.
Hammer Wt.:	140 lbs	140 lbs
Hammer Fall:	30 in.	30 in.
Rig Type:	B-47 Mobile Drill Track	
Other:	NX/BX-size Core Barrels	

Groundwater Observations

Date	Depth (ft)	Elev. (ft)	Notes
6/27/03, 14:25			None

Sample Information

Depth (ft)	Casing Blows/ft	Number	Type	Penetration (inches)	Recovery (inches)	Depth (ft)	0 - 6	6 - 12	12 - 18	18 - 24	Coring Time (min./ft)	Moisture Content (%)
		S1	SS	24	4	0	1	2	8	5		
		S2	SS	24	3	2	7	5	5	3		
5		S3	SS	24	4	4	11	9	7	6		
		S4	SS	24	6	6	29	14	6	5		
		S5	SS	24	10	8	9	7	27	6		
10												
		S6	SS	6	6	10	15	30/0"				
		~~C1~~	~~C~~	~~69~~	~~69~~	~~10.5~~					6 3	
											5	
											10	
15											3 12 23	
		C2	C	35	35	16.3					18	
											10	
											25	
											42	
20												
25												
30												

Strata Description (Depth & Elevation (feet)):
- TOPSOIL 529.5
- SAND and GRAVEL FILL (with Cobbles and Boulders)
- 10.5 — SAND and GRAVEL (Possible FILL with Cobbles and Boulders) 519.5
- 15 — Probable BEDROCK (Quartzite) 515.0
- 19.2 — Bottom of Exploration at 19.2 ft 510.8

Sample Description — Classification System: Burmister
- S1): Loose, black, fine to medium SAND, little Silt with roots (Topsoil), with piece of coarse Gravel in spoon tip.
- S2): Loose, dark brown, fine to coarse SAND, little Gravel, little Silt, trace root fibers.
- S3): Medium dense, similar to S2, except colored light brown to orange, some Silt, moist.
- S4): Medium dense, dark brown SILT, some fine to coarse Gravel, little fine to medium Sand, moist. Possible slag pieces.
- S5): Dense. Top 6": Similar to S4, with broken glass and white pottery / porcelain. Bottom 4": Light brown, fine to medium SAND, little Gravel, little Silt, moist.
- S6): Very dense/refusal. Similar to S4, with bottom 1" containing pieces of pinkish gray quartzite.
- C1): Recovered pieces of granitic Cobbles and Boulders (up to 4" long). Began coring light gray, slightly weathered, closely jointed QUARTZITE bedrock at 15' deep.
- C2): Very hard, light to dark gray, slightly weathered orange (oxidized) along fracture surfaces, closely jointed, fair quality QUARTZITE (RQD=53%). Fractures typically <10 and 80-90 degrees from horizontal.

Remarks:
1) Ground surface elevation estimated in the field by GeoDesign using a hand level.
2) Observed increased drilling resistance through possible cobbles/small boulders between 5' and 8' deep during solid stem auger advance. Harder drilling resistance observed at 9.5' deep.
3) Split spoon refusal at 10.6' deep on possible boulder or bedrock. Installed 4" I.D. casing to 10.3' and used 2.9" O.D. roller bit to flush borehole prior to coring.
4) Penetrated probable Sand and Gravel below 10.8' deep using core barrel. Loose Sand and Gravel soils estimated between 12.7' to 13.8' deep. Probable boulder between 13.8' to 14.7' deep.
5) No wash water return observed during coring. Water loss probably occuring below casing starting at 10.5' deep.
6) Switched from NX-size to BX-size core barrel at 16.8' deep.
7) Possible bedrock seam (~1.5" thick) encountered during coring at 17.5' to 17.7' deep.

Notes:
1) Stratification Lines Represent Approximate Boundary Between Material Types, Transitions May Be Gradual.
2) Water Level Readings Have Been Made At Times And Under Conditions Stated, Fluctuations Of Groundwater May Occur Due To Other Factors Than Those Present At The Time Measurements Were Made. A.C. = After coring; N.R. = Not Recorded.
3) Sample Type Coding: A=Auger; C=Core; B=Driven; G=Grab; PS=Piston Sampler; SS=Split Barrel (Split Spoon); ST=Shelby Tube; Geo=GeoProbe V=Vane; WOR/H=Weight of Rod/Hammer
4) Proportions Used: Trace = 1-10%; Little = 10-20%; Some = 20-35%; And = 35-50%
5) Stratification lines represent approximate boundary between material types, transitions may be gradual.

Boring No.: B-2

RTE. 125 BRIDGE CONVERSION 750-03.10 (EDITED TO IMPERICAL).GPJ GEODESIGN STANDARD .GDT 12/17/09

VHB Vanasse Hangen Brustlin, Inc.

PROJECT NAME: MIDDLEBURY
PROJECT NUMBER: RS 0174(8)

FILE NAME: z78f217borlog.dgn | PLOT DATE: 8/27/2013
PROJECT LEADER: M.A. COLGAN | DRAWN BY: B.J. MASSE
DESIGNED BY: GEODESIGN | CHECKED BY: G.S. GOODRICH
BORING LOGS (3 OF 7) | SHEET 41 OF 104

VHB 57438

TOP OF FOOTING EL = 515.00

RTE. 125 BRIDGE CONVERSION 750-03.10 (EDITED TO IMPERICAL).GPJ GEODESIGN STANDARD .GDT 12/17/09

GEODESIGN INCORPORATED
Geotechnical Engineers/Environmental Consultants/Construction Engineers
P.O. Box 699, Windsor, VT 05089, Phone: 802-674-2033/Fax: 802-674-5943
1233 Shelburne Rd., Suite 360, So. Burlington, VT 05403, Phone: 802-652-5140

BORING LOG

Project Name: Route 125 Bridge, RS 0174 (8), Middlebury, VT

Boring No.: B-3 | Page No.: 1 of 2 | File No.: 750-04.1 | Checked By: JEL

Boring Company: M & W Soils Engineering, Inc.
Foreman: Myron Domingue
GeoDesign Rep.: Jason Gaudette
Date Started: July 8, 2003 | Date Finished: July 1, 2003
N. Coordinate: | E. Coordinate:
Ground Surface Elevation (feet): 536.9
Station: 14+36.20 | Offset: 15.1 ft RT

	Casing:	Sampler:
Type:	FJ	SS
I.D.:	3.0 in.	1.38 in.
Hammer Wt.:	300 lbs	140 lbs
Hammer Fall:	30 in.	30 in.
Rig Type:	B-47 Mobile Drill Track	
Other:	BX-size Core Barrel	

Groundwater Observations

Date	Depth (ft)	Elev. (ft)	Notes
7/1/03, 9:00	10.5	526.4	Wet Soil
7/8/03, 8:45	28.0	508.9	In Casing

Sample Information

Depth (ft)	Casing Blows/ft	Number	Type	Penetration (inches)	Recovery (inches)	Depth (ft)	0 - 6	6 - 12	12 - 18	18 - 24	Coring Time (min./ft)	Moisture Content (%)
		S1	SS	24	15	1	9	13	8	4		
		S2	SS	24	8	3	5	5	6	6		
5												
		S3	SS	24	2	5	6	6	4	3		
		S4	SS	24	7	7	3	1	5	3		
10		S5	SS	8	2	9	14	50/2"				
		S6	SS	6	6	10.3	61/6"					
		S7	SS	7	7	11	26	25/0.75"				
		C1	C	24	21	12.3					27	
											48	
15		C2	C	36	36	14.3					30	
											49	
											22	
		C3	C	60	60	17.3					16	
											40	
20											18	
											19	
											33	
		C4	C	60	59	22.3					15	
											12	
25											20	
											38	
											22	
		C5	C	32	31	27.3					22	
											60+	
30												

Strata Description (Depth & Elevation (feet)):
- Bituminous CONCRETE 536.6
- SAND and GRAVEL FILL
- 8 — SAND and GRAVEL FILL (with Cobbles) 528.9
- 11.5 — Possible Boulder or Weathered BEDROCK 525.4
- 12.3 — BEDROCK (Quartzite) 524.6

Sample Description — Classification System: Burmister

S1): Medium dense. Top 4": Black, fine to coarse SAND, little Silt.
Bottom 11": Light brown, fine to medium SAND, some Silt, trace to little Gravel, dry.

S2): Medium dense, similar to bottom of S1, except darker brown.

S3): Medium dense, similar to bottom of S1, with pieces of coarse Gravel stuck in spoon tip.

S4): Loose, similar to bottom of S1, except light brown to black.

S5): Refusal. Pieces of pulverized quartzite in spoon tip.

S6): Very dense, light gray brown to oxidized orange, fine to medium SAND and SILT, some Gravel, wetter.

S7): Refusal. Similar to S2, except with orange oxidation.

C1): Very hard, light gray, slightly weathered orange-red along fracture planes, very closely jointed, very poor quality QUARTZITE (RQD=0%). Interbedded (less than 2cm thick) with softer, dark gray to black Phyllite.

C2): Similar rock type to above (RQD=12%).

C3): Similar rock type to above, except closely to very closely jointed (RQD=20%). Fractures typically <10 and 50-75 degrees from horizontal.

C4): Similar rock type to above, except closely to moderately jointed, fair quality (RQD=59%). More fractures observed 80-85 degrees from horizontal.

C5): Similar rock type to above, except fewer near-vertical fractures (RQD=53%).

Remarks:
1) Ground surface elevation estimated in the field by GeoDesign using a hand level.
2) Split spoon refusal at 9.7' deep on possible boulder or bedrock. Cobbles estimated in fill up to 6" diameter during solid stem auger advance between 8' to 11.5' deep.
3) Used solid stem auger to advance open hole to 11.5' deep. Installed 3" I.D. casing to 12' deep and used 2.9" O.D. roller bit to flush borehole to 12.3' deep prior to coring. No water loss observed.
4) Gray wash water observed during coring. Lost water at 12' deep - regained at 13.2' deep for +/- 3 mins.
5) Lower coring resistance observed between 23.3' to 23.7' deep (1-2 minutes total).

Notes:
1) Stratification Lines Represent Approximate Boundary Between Material Types, Transitions May Be Gradual.
2) Water Level Readings Have Been Made At Times And Under Conditions Stated, Fluctuations Of Groundwater May Occur Due To Other Factors Than Those Present At The Time Measurements Were Made.
A.C. = After coring; N.R. = Not Recorded.
3) Sample Type Coding: A=Auger; C=Core; D=Driven; G=Grab; PS=Piston Sampler; SS=Split Barrel (Split Spoon); ST=Shelby Tube; Geo=GeoProbe V=Vane;
WOR/H=Weight of Rod/Hammer
4) Proportions Used: Trace = 1-10%; Little = 10-20%; Some = 20-35%; And = 35-50%
5) Stratification lines represent approximate boundary between material types, transitions may be gradual.

Boring No.: B-3

GEODESIGN INCORPORATED
Geotechnical Engineers/Environmental Consultants/Construction Engineers
P.O. Box 699, Windsor, VT 05089, Phone: 802-674-2033/Fax: 802-674-5943
1233 Shelburne Rd., Suite 360, So. Burlington, VT 05403, Phone: 802-652-5140

BORING LOG

Project Name: Route 125 Bridge, RS 0174 (8), Middlebury, VT

Boring No.: B-3 | Page No.: 2 of 2 | File No.: 750-04.1 | Checked By: JEL

Boring Company: M & W Soils Engineering, Inc.
Foreman: Myron Domingue
GeoDesign Rep.: Jason Gaudette
Date Started: July 8, 2003 | Date Finished: July 1, 2003
N. Coordinate: | E. Coordinate:
Ground Surface Elevation (feet): 536.9
Station: 14+36.20 | Offset: 15.1 ft RT

	Casing:	Sampler:
Type:	FJ	SS
I.D.:	3.0 in.	1.38 in.
Hammer Wt.:	300 lbs	140 lbs
Hammer Fall:	30 in.	30 in.
Rig Type:	B-47 Mobile Drill Track	
Other:	BX-size Core Barrel	

Groundwater Observations

Date	Depth (ft)	Elev. (ft)	Notes
7/1/03, 9:00	10.5	526.4	Wet Soil
7/8/03, 8:45	28.0	508.9	In Casing

Sample Information

Depth (ft)	Casing Blows/ft	Number	Type	Penetration (inches)	Recovery (inches)	Depth (ft)	0 - 6	6 - 12	12 - 18	18 - 24	Coring Time (min./ft)	Moisture Content (%)
		C6	C	30	29	30						
											21	
											51	
		C7	C	60	60	32.5					38	
											26	
35											18	
											27	
											47	
		C8	C	12	7	37.5					60+	
40												
45												
50												
55												
60												

Strata Description (Depth & Elevation (feet)):
- BEDROCK (Quartzite) (Continued)
- 38.5 — Bottom of Exploration at 38.5 ft 498.4

Sample Description — Classification System: Burmister

C6): Similar rock type to above, except poor quality (RQD=32%). Fractures typically <15 and 80-85 degrees from horizontal.

C7): Similar rock type to above, except close to moderately jointed, fair quality (RQD=70%). Fractures typically <10 degrees from horizontal.

C8): Similar rock type to above, except fresh, very poor quality (RQD=0%).

Remarks:

Notes:
1) Stratification Lines Represent Approximate Boundary Between Material Types, Transitions May Be Gradual.
2) Water Level Readings Have Been Made At Times And Under Conditions Stated, Fluctuations Of Groundwater May Occur Due To Other Factors Than Those Present At The Time Measurements Were Made.
A.C. = After coring; N.R. = Not Recorded.
3) Sample Type Coding: A=Auger; C=Core; D=Driven; G=Grab; PS=Piston Sampler; SS=Split Barrel (Split Spoon); ST=Shelby Tube; Geo=GeoProbe V=Vane;
WOR/H=Weight of Rod/Hammer
4) Proportions Used: Trace = 1-10%; Little = 10-20%; Some = 20-35%; And = 35-50%
5) Stratification lines represent approximate boundary between material types, transitions may be gradual.

Boring No.: B-3

GEODESIGN INCORPORATED
Geotechnical Engineers/Environmental Consultants/Construction Engineers
P.O. Box 699, Windsor, VT 05089, Phone: 802-674-2033/Fax: 802-674-5943
1233 Shelburne Rd., Suite 360, So. Burlington, VT 05403, Phone: 802-652-5140

BORING LOG

Project Name: Route 125 Bridge, RS 0174 (8), Middlebury, VT

Boring No.: B-4A | Page No.: 1 of 1 | File No.: 750-04.1 | Checked By: JEL

Boring Company: M & W Soils Engineering, Inc.
Foreman: Myron Domingue
GeoDesign Rep.: Jason Gaudette
Date Started: July 8, 2003 | Date Finished: July 8, 2003
N. Coordinate: | E. Coordinate:
Ground Surface Elevation (feet): 538.6
Station: 14+61.30 | Offset: 15.2 ft RT

	Casing:	Sampler:
Type:	S.S.A	N/A
I.D.:	4.0 in.	in.
Hammer Wt.:	NA	
Hammer Fall:	NA	
Rig Type:	B-47 Mobile Drill Track	
Other:	108mm O.D. Flight Auger	

Groundwater Observations

Date	Depth (ft)	Elev. (ft)	Notes
7/8/03, 13:20			None

Sample Information

Depth (ft)	Casing Blows/ft	Number	Type	Penetration (inches)	Recovery (inches)	Depth (ft)	0 - 6	6 - 12	12 - 18	18 - 24	Coring Time (min./ft)	Moisture Content (%)
5												
10												
15												
20												
25												
30												

Strata Description (Depth & Elevation (feet)):
- Bituminous CONCRETE 538.2
- Silty SAND and GRAVEL
- 4 — Bottom of Exploration at 4.0 ft 534.6

Sample Description — Classification System: Burmister

Remarks:
1) Ground surface elevation estimated in the field by GeoDesign using a hand level.
2) 4.25" O.D. solid stem auger used to advance hole. Light to dark brown, fine to medium SAND, little Silt, little Gravel observed from auger cuttings at ground surface.
3) Solid stem auger refusal at 4' deep on possible large boulder or bedrock. Moved 1.5' south and attempted boring B-7B.

Notes:
1) Stratification Lines Represent Approximate Boundary Between Material Types, Transitions May Be Gradual.
2) Water Level Readings Have Been Made At Times And Under Conditions Stated, Fluctuations Of Groundwater May Occur Due To Other Factors Than Those Present At The Time Measurements Were Made.
A.C. = After coring; N.R. = Not Recorded.
3) Sample Type Coding: A=Auger; C=Core; D=Driven; G=Grab; PS=Piston Sampler; SS=Split Barrel (Split Spoon); ST=Shelby Tube; Geo=GeoProbe V=Vane;
WOR/H=Weight of Rod/Hammer
4) Proportions Used: Trace = 1-10%; Little = 10-20%; Some = 20-35%; And = 35-50%
5) Stratification lines represent approximate boundary between material types, transitions may be gradual.

Boring No.: B-4A

GEODESIGN INCORPORATED — BORING LOG

Geotechnical Engineers/Environmental Consultants/Construction Engineers
P.O. Box 699, Windsor, VT 05089 — Phone: 802-674-2033/Fax: 802-674-5943
1233 Shelburne Rd., Suite 360, So. Burlington, VT 05403 — Phone: 802-652-5140

Project Name: Route 125 Bridge, RS 0174 (8), Middlebury, VT

Boring No.: B-4B — Page No.: 1 of 1 — File No.: 750-04.1 — Checked By: JEL

Boring Company: M & W Soils Engineering, Inc.
Foreman: Myron Domingue
GeoDesign Rep.: Jason Gaudette
Date Started: July 8, 2003 — Date Finished: July 8, 2003
N. Coordinate: — E. Coordinate:
Ground Surface Elevation (feet): 538.9
Station: 14+62.60 — Offset: 22 ft RT

	Casing	Sampler
Type:	S.S.A	N/A
I.D.:	4.0 in.	in.
Hammer Wt.:	NA	
Hammer Fall:	NA	
Rig Type:	B-47 Mobile Drill Track	
Other:	108mm O.D. Flight Auger	

Groundwater Observations

Date	Depth (ft)	Elev. (ft)	Notes
7/8/03, 15:45			None

Sample Information

Number	Type	Penetration (inches)	Recovery (inches)	Depth (ft)	0 - 6	6 - 12	12 - 18	18 - 24	Coring Time (min./ft)	Moisture Content (%)
S1	SS	13	13	5.5	5	32	15/1.2"			

Strata Description (Depth & Elevation (feet)):
- Bituminous CONCRETE — 538.5
- Silty SAND and GRAVEL — 4.5
- Silty SAND and GRAVEL (with Cobbles and Boulders) — 534.4 — 7.2
- Bottom of Exploration at 7.2 ft — 531.7

Sample Description (Classification System: Burmister):
S1): Very dense / Refusal. Top 6": Gray fine SAND and Silt.
Bottom 7": Brown, layered fine to medium SAND, little Silt, with roots and root fibers. Oxidized orange to dark red. Pieces of fractured gravel/cobbles in spoon tip.

Remarks:
1) Ground surface elevation estimated in the field by GeoDesign using a hand level.
2) 4.25" O.D. solid stem auger used to advance borehole. Harder resistance observed between 4.5' to 5' deep and 6' to 7.2' through possible cobbles and small boulders.
3) Solid stem auger refusal at 7.2' on possible large boulder or bedrock.

Notes:
1) Stratification Lines Represent Approximate Boundary Between Material Types, Transitions May Be Gradual.
2) Water Level Readings Have Been Made At Times And Under Conditions Stated, Fluctuations Of Groundwater May Occur Due To Other Factors Than Those Present At The Time Measurements Were Made.
A.C. = After coring; N.R. = Not Recorded.
3) Sample Type Coding: A=Auger; C=Core; B=Driven; G=Grab; PS=Piston Sampler; SS=Split Barrel (Split Spoon); ST=Shelby Tube; Geo=GeoProbe V=Vane;
WOR/H=Weight of Rod/Hammer
4) Proportions Used: Trace = 1-10%; Little = 10-20%; Some = 20-35%; And = 35-50%
5) Stratification lines represent approximate boundary between material types, transitions may be gradual.

Boring No.: B-4B

RTE. 125 BRIDGE CONVERSION 750-03.10 (EDITED TO IMPERICAL).GPJ GEODESIGN STANDARD .GDT 12/17/09

TOP OF FOOTING EL = 515.00

GEODESIGN INCORPORATED — BORING LOG

Project Name: Route 125 Bridge, RS 0174 (8), Middlebury, VT

Boring No.: B-5 — Page No.: 1 of 2 — File No.: 750-04.1 — Checked By: JEL

Boring Company: M & W Soils Engineering, Inc.
Foreman: Myron Domingue
GeoDesign Rep.: Jason Gaudette
Date Started: July 3, 2003 — Date Finished: July 11, 2003
N. Coordinate: — E. Coordinate:
Ground Surface Elevation (feet): 532.7
Station: 14+50.00 — Offset: 27 ft LT

	Casing	Sampler
Type:	FJ	SS
I.D.:	3.0 in.	1.38 in.
Hammer Wt.:	300 lbs	140 lbs
Hammer Fall:	30 in.	30 in.
Rig Type:	B-47 Mobile Drill Track	
Other:	BX-size Core Barrel	

Groundwater Observations

Date	Depth (ft)	Elev. (ft)	Notes
7/11/03, 14:25			None

Sample Information

Number	Type	Penetration (inches)	Recovery (inches)	Depth (ft)	0 - 6	6 - 12	12 - 18	18 - 24	Coring Time (min./ft)	Moisture Content (%)
S1	SS	18	12	0	6	8	3	25/0"		
S2	SS	13	8	2	4	2	18/0.8"			
C1	C	60	54	3.8					6	
									16	
									36	
									48	
									14	
C2	C	22	22	8.8					15	
									30	
C3	C	37	37	10.7					42	
									16	
C4	C	60	60	13.8						
C5	C	60	60	18.8						
C6	C	48	48	23.8						
C7	C	58	58	27.8						

Strata Description (Depth & Elevation (feet)):
- TOPSOIL — 1.5
- Silty SAND (with Cobbles and Boulders) — 531.2 — 4.5
- BEDROCK (Quartzite) — 528.2

Sample Description (Classification System: Burmister):
S1) Medium dense, dark brown, fine SAND and SILT, trace Gravel, with roots and root fibers, moist.
S2) Refusal. Similar to S1, except fine to medium SAND, with organic litter.
C1): Very hard, light to dark gray, slightly weathered orange-red along fracture surfaces, closely jointed, poor quality QUARTZITE (RQD=38%). Fractures typically <15 and 45 degrees from horizontal.
C2): Similar rock type to above (RQD=25%).
C3): Similar rock type to above
C4): Similar rock type to above (RQD=23%). Fractures typically <10 and >70 degrees from horizontal.
C5): Similar rock type to above, except close to very closely jointed (RQD=32%). Two 3/4" thick dark gray to black SLATE beds noted near bottom of run.
C6): Similar rock type to above, except closely jointed, very poor quality (RQD=19%). One 0.5" thick black SLATE bed noted.
C7): Similar rock type to above, except close to very closely jointed (RQD=18%). Fractures typically <10 and 70-85 degrees from

Remarks:
1) Ground surface elevation estimated in the field by GeoDesign using a hand level.
2) Split spoon refusal on possible tree root, cobble, boulder at 3' deep. Large Quartzite boulders (18" to 24" diameter) observed approximately 1' below ground surface during solid stem auger advance.
3) 3" I.D. casing set to 3.8' deep. Used 2.9" O.D. diameter roller bit to flush hole prior to coring.
4) Bedrock seam noted at 8.9' deep (<3/4" thick). Observed temporary change in wash water color to darker gray.

Notes:
1) Stratification Lines Represent Approximate Boundary Between Material Types, Transitions May Be Gradual.
2) Water Level Readings Have Been Made At Times And Under Conditions Stated, Fluctuations Of Groundwater May Occur Due To Other Factors Than Those Present At The Time Measurements Were Made.
A.C. = After coring; N.R. = Not Recorded.
3) Sample Type Coding: A=Auger; C=Core; B=Driven; G=Grab; PS=Piston Sampler; SS=Split Barrel (Split Spoon); ST=Shelby Tube; Geo=GeoProbe V=Vane;
WOR/H=Weight of Rod/Hammer
4) Proportions Used: Trace = 1-10%; Little = 10-20%; Some = 20-35%; And = 35-50%
5) Stratification lines represent approximate boundary between material types, transitions may be gradual.

Boring No.: B-5

RTE. 125 BRIDGE CONVERSION 750-03.10 (EDITED TO IMPERICAL).GPJ GEODESIGN STANDARD .GDT 12/17/09

GEODESIGN INCORPORATED — BORING LOG

Project Name: Route 125 Bridge, RS 0174 (8), Middlebury, VT

Boring No.: B-5 — Page No.: 2 of 2 — File No.: 750-04.1 — Checked By: JEL

Boring Company: M & W Soils Engineering, Inc.
Foreman: Myron Domingue
GeoDesign Rep.: Jason Gaudette
Date Started: July 3, 2003 — Date Finished: July 11, 2003
N. Coordinate: — E. Coordinate:
Ground Surface Elevation (feet): 532.7
Station: 14+50.00 — Offset: 27 ft LT

	Casing	Sampler
Type:	FJ	SS
I.D.:	3.0 in.	1.38 in.
Hammer Wt.:	300 lbs	140 lbs
Hammer Fall:	30 in.	30 in.
Rig Type:	B-47 Mobile Drill Track	
Other:	BX-size Core Barrel	

Groundwater Observations

Date	Depth (ft)	Elev. (ft)	Notes
7/11/03, 14:25			None

Strata Description (Depth & Elevation (feet)):
- BEDROCK (Quartzite) (Continued) — 32.6
- Bottom of Exploration at 32.6 ft — 500.1

Sample Description (Classification System: Burmister):
horizontal.

Notes:
1) Stratification Lines Represent Approximate Boundary Between Material Types, Transitions May Be Gradual.
2) Water Level Readings Have Been Made At Times And Under Conditions Stated, Fluctuations Of Groundwater May Occur Due To Other Factors Than Those Present At The Time Measurements Were Made.
A.C. = After coring; N.R. = Not Recorded.
3) Sample Type Coding: A=Auger; C=Core; B=Driven; G=Grab; PS=Piston Sampler; SS=Split Barrel (Split Spoon); ST=Shelby Tube; Geo=GeoProbe V=Vane;
WOR/H=Weight of Rod/Hammer
4) Proportions Used: Trace = 1-10%; Little = 10-20%; Some = 20-35%; And = 35-50%
5) Stratification lines represent approximate boundary between material types, transitions may be gradual.

Boring No.: B-5

Vanasse Hangen Brustlin, Inc.

PROJECT NAME: MIDDLEBURY
PROJECT NUMBER: RS 0174(8)

FILE NAME: z78f217borlog.dgn — PLOT DATE: 8/27/2013
PROJECT LEADER: M.A. COLGAN — DRAWN BY: B.J. MASSE
DESIGNED BY: GEODESIGN — CHECKED BY: G.S. GOODRICH
BORING LOGS (5 OF 7) — SHEET 43 OF 104

STATE OF VERMONT
AGENCY OF TRANSPORTATION
MATERIALS & RESEARCH SECTION
SUBSURFACE INFORMATION

BORING NUMBER: B-201
SHEET 1 of 1
DATE STARTED: 4/08/10
DATE COMPLETED: 4/16/10

PROJECT NAME: MIDDLEBURY
SITE NAME: VT-125
STATION: 14+19 = 243+09.00
OFFSET: 11.00
VTSPG NAD83: N 536378.30 ft E 1486218.87 ft

PROJECT NUMBER: RS 0174(8)
SITE NUMBER: BR-13
GROUND ELEVATION: 536.57 ft
GROUNDWATER DEPTH: 18.1 ft 4/14/10
PROJECT PIN NUMBER: 78F217

BORING CREW
CREW CHIEF: GARROW
DRILLER: GARROW
LOGGER: MAHMUTOVIC

BORING RIG: CME 45C SKID AUTO
BORING TYPE: WASH BORE
SAMPLE TYPE: SPLIT BARREL
CHECKED BY: TDE

TOP OF FOOTING EL = 515.00

DEPTH (ft)	SYMBOL	CLASSIFICATION OF MATERIALS (Description)	BLOWS PER FOOT / RUN	M.C. (%) / REC (%)	GRAVEL (%) / RQD (%)	SAND (%) / Dip (deg)	FINES (%) / Drill Rate (min/ft)
		Asphalt pavement, 0.0 ft – 0.5 ft					
		A-2-4, SiSa, brn, Moist, Rec. = 1.3 ft	22	9.5	11.3	65.4	23.3
5		Cobbles, 4.0 ft – 7.0 ft, Cleaned out casing.					
		NXDC, Boulder, 7.2 ft – 10.2 ft, Rec. = 1.8 ft.					
10		NXDC, Cobbles, 10.2 ft – 11.2 ft, Rec. = 0.9 ft.					
		NXMDC, Cobbles, 11.2 ft – 13.2 ft, Rec. = 1.5 ft.					
		13.2 ft – 15.0 ft, Advanced casing 13.2'–15.0'. Cleaned out casing to 15.0 ft.					
15		NXDC, Cobbles, 15.0 ft – 17.0 ft, Rec. = 1.5 ft.					
		NXDC, Cobbles, 17.0 ft – 19.0 ft, Advanced casing.					
20		NXDC, Cobbles, 19.0 ft – 21.0 ft, Cleaned out casing.					
				Top of Bedrock @	21.0 ft		
		White to buff, Vitreous Quartzite, with closely spaced iron stained jointing. Fair Rock, Very hard, Fresh Weathering, NXMDC, 21.0 ft – 24.0 ft, Rec. = 2.9 ft	1	97	60	10	10 13 14
25		Same as Run #1, NXMDC, 24.0 ft – 25.0 ft, Rec. = 0.4 ft	2	40	0	10	17
		Same as Run #1, NXMDC, 25.0 ft – 26.0 ft, Rec. = 0.2 ft	3	20	0	10	19
		Same as Run #1, NXMDC, 26.0 ft – 27.0 ft, Rec. = 1.0 ft	4	100	0	10	16
		Same as Run #1, NXMDC, 27.0 ft – 27.5 ft, Rec. = 0.4 ft	5	80	0	10	25
		Same as Run #1, NXMDC, 27.5 ft – 28.5 ft, Rec. = 1.0 ft	6	100	0	10	30
30		Same as Run #1, NXMDC, 28.5 ft – 31.5 ft, Rec. = 2.4 ft	7	80	33	10	10 17 20
		White to buff, Vitreous Quartzite, with closely spaced iron stained jointing. Thin Phyllitic zone at 32.3 feet. Fair Rock, Very hard, Fresh Weathering, NXMDC, 31.5 ft – 33.0 ft, Rec. = 1.5 ft	8	100	67	10	18 20
35		Same as Run #1, NXMDC, 33.0 ft – 36.0 ft, Rec. = 2.4 ft	9	80	56	10	13 17 30
		Same as Run #1, NXMDC, 36.0 ft – 37.0 ft, Rec. = 0.7 ft	10	70	0	10	15
		Same as Run #1, NXMDC, 37.0 ft – 38.5 ft, Rec. = 1.0 ft	11	67	0	10	20 20
40		White to buff, Vitreous Quartzite, with closely spaced iron stained jointing. Thin Phyllitic zone at 39.5 feet. Fair Rock, Very hard, Fresh Weathering, NXMDC, 38.5 ft – 40.5 ft, Rec. = 1.7 ft	12	85	55	10	17 10
		Hole stopped @ 40.5 ft					
45							

DRILLER'S NOTES:
1. From 31.5 to 38.5 feet, the bit was changed five times.

LOG OF BORING MIDDLEBURY RS 0174(8).GPJ VT AOT.GDT 5/6/10

STATE OF VERMONT
AGENCY OF TRANSPORTATION
MATERIALS & RESEARCH SECTION
SUBSURFACE INFORMATION

BORING NUMBER: B-202
SHEET 1 of 1
DATE STARTED: 3/31/10
DATE COMPLETED: 4/06/10

PROJECT NAME: MIDDLEBURY
SITE NAME: VT-125
STATION: 13+59 = 243+69.00
OFFSET: 11.00
VTSPG NAD83: N 536431.30 ft E 1486190.93 ft

PROJECT NUMBER: RS 0174(8)
SITE NUMBER: BR-13
GROUND ELEVATION: 532.53 ft
GROUNDWATER DEPTH:
PROJECT PIN NUMBER: 78F217

BORING CREW
CREW CHIEF: GARROW
DRILLER: GARROW
LOGGER: MAHMUTOVIC

BORING RIG: CME 45C SKID AUTO
BORING TYPE: WASH BORE
SAMPLE TYPE: SPLIT BARREL
CHECKED BY: TDE

TOP OF FOOTING EL = 518.00

DEPTH (ft)	SYMBOL	CLASSIFICATION OF MATERIALS (Description)	BLOWS PER FOOT / RUN	M.C. (%) / REC (%)	GRAVEL (%) / RQD (%)	SAND (%) / Dip (deg)	FINES (%) / Drill Rate (min/ft)
		Asphalt Pavement, 0.0 ft – 0.5 ft					
		A-2-4, GrSa, brn, Moist, Rec. = 1.3 ft	28	8.2	21.1	59.2	19.7
5		A-2-4, GrSa, brn, MTW, Rec. = 0.9 ft	13	12.5	28.4	53.1	18.5
10		Field Note:, Started coring at 10.0 feet. Run #1 starts at 10.0 feet					
		Lab Note, Boulder Backfill,NXMDC, 10.0 ft, Rec. = 0.8 ft	1	80			26
		Lab Note, Boulder Backfill & ConcreteNXMDC, Rec. = 4.0 ft	2	80			20 20 20 21 20
15		Lab Note, Boulder Backfill & ConcreteNXMDC, Rec. = 3.0 ft	3	100	0	10	20
				Top of Bedrock @		17.3 ft	
		White to buff, Vitreous Quartzite, with closely spaced iron stained jointing. Fair Rock, Very hard, Fresh Weathering, 17.3 ft – 19.0 ft					20 20
20		White to buff, Vitreous Quartzite, with closely spaced iron stained jointing. Fair Rock, Very hard, Fresh Weathering, NXMDC, 19.0 ft – 21.0 ft, Rec. = 2.0 ft	4	100	0	10	15 13
		White to buff, Vitreous Quartzite, with closely spaced iron stained jointing. Thin Phyllitic zone at 23.4 feet. Fair Rock, Very hard, Fresh Weathering, NXMDC, 21.0 ft – 24.0 ft, Rec. = 2.8 ft	5	93	11	10	14 20 16
		Same as Run #4, NXMDC, 24.0 ft – 25.0 ft, Rec. = 1.0 ft	6	100	0	10	26
25		Same as Run #4, NXMDC, 25.0 ft – 27.0 ft, Rec. = 1.5 ft	7	75	21	10	25 25
		White to buff, Vitreous Quartzite, with closely spaced iron stained jointing. Thin Phyllitic zone at 28.6 feet. Fair Rock, Very hard, Fresh Weathering, NXMDC, 27.0 ft – 29.0 ft, Rec. = 1.6 ft	8	80	48	10	12 16
30		Same as Run #4, NXMDC, 29.0 ft – 31.0 ft, Rec. = 1.4 ft	9	70	50	10	14
		Hole stopped @ 31.0 ft					
35							

DRILLER'S NOTES:
1. From 25.0 to 29.0 feet, the bit was changed three times.
3. No water return after 7.0 feet.

LOG OF BORING MIDDLEBURY RS 0174(8).GPJ VT AOT.GDT 5/6/10

Vanasse Hangen Brustlin, Inc.

PROJECT NAME: MIDDLEBURY
PROJECT NUMBER: RS 0174(8)

FILE NAME: z78f217borlog.dgn
PROJECT LEADER: M.A. COLGAN
DESIGNED BY: VTRANS
BORING LOGS (6 OF 7)

PLOT DATE: 8/27/2013
DRAWN BY: B.J. MASSE
CHECKED BY: G.S. GOODRICH
SHEET 44 OF 104

Test Pit Field Log

GeoDesign, Inc. 54 Main Street Windsor, Vermont 05089	Project Name: ROUTE 125 BRIDGE REDIMT(8) MIDDLEBURY, VERMONT	Test Pit No: TP-3	File No.: 750-0810
		Date: 8/1/03	
Engineer: JASON GAUDETTE	Contractor: MARKOWSKI EXCAVATING		
	Operator: LINDY BOVEY	Model: EX170	Ground Elev. +/- 157.5m
	Make: VOLVO		Time Started: 0915
Weather: RAIN ~60's	Capacity: +/- 1 C.Y. BUCKET	Reach: +/- 23'	Time Stopped: 1030

Depth 0'	Soil Description	Field Testing (PID)	Excavation Effort	Boulder Count Qty. Class	Remark No.
1'	+/- 0.5' • DARK BROWN TOPSOIL	—	E		1
2'	• LIGHT BROWN, FINE TO MEDIUM +/- 2' SAND, SOME SILT.	—	E		
3'	• DARK BROWN, FINE TO COARSE	—	E	A x 6	
1.0m 4'	SAND AND GRAVEL (FILL).	—	M	A x 4, 6 x 2	
5'	OBSERVED ASPHALT SLABS (UP TO 12" □) AND CONCRETE +/- 5'	—	M	B x 4	
6'	DEBRIS (UP TO 18-25" LONG).	—	E	A x 2	
2.0m 7'	+/- 6.5' ORANGE BROWN, FINE SAND +/- 6.5'	—	E		
8'	+/- 8' SOME SILT, TR. GRAVEL.				
9'	END OF EXPLORATION AT				
10'	8' (SIDEWALK) TO 6.5' (GRASS)				
11'	— NO BUCKET REFUSAL —				
12'					
13'					
14'					
15'					

Remarks: (1) GROUND SURFACE ELEVATIONS ESTIMATED IN THE FIELD BY GEODESIGN.

Test Pit Plan	Boulder Count	Proportions Used	Abbreviations	Groundwater
10' 5.5' [5 · 65] North	Size Range / Desig.: 6-18" A; 18-36" B; >36" C	Trace (Tr.) 0-10%; Little (Li.) 10-20%; Some (So.) 20-35%; And 35-50%	F-Fine; M-Medium; C-Coarse; F/M-Fine to Medium; F/C-Fine to Coarse; V-Very	Elapsed Time: NONE OBSERVED; Depth: —
Est. Vol. Excavated: 14.8 yd³	Excavation Effort: E = Easy; M = Moderate; D = Difficult			

Test Pit Field Log

GeoDesign, Inc. 54 Main Street Windsor, Vermont 05089	Project Name: ROUTE 125 BRIDGE REDIMT(8) MIDDLEBURY, VERMONT	Test Pit No: TP-4	File No.: 750-0810
		Date: 8/1/03	
Engineer: JASON GAUDETTE	Contractor: MARKOWSKI EXCAVATING		
	Operator: LINDY BOVEY	Model: EX170	Ground Elev. +/- 157.5m
	Make: VOLVO		Time Started: 0940
Weather: RAIN ~60's	Capacity: +/- 1 C.Y. BUCKET	Reach: +/- 23'	Time Stopped: 1010

Depth 0'	Soil Description	Field Testing (PID)	Excavation Effort	Boulder Count Qty. Class	Remark No.
1'	• LIGHT TO DARK BROWN, FINE	—	E	C x 3	1 2
2'	TO MEDIUM SAND AND SILT,	—	E		
3'	+/- 2.5' LITTLE GRAVEL (FILL). +/- 3'	—	E		
1.0m 4'	• BLACK SAND AND GRAVEL	—	E	A x 2	
5'	+/- 4.5' FILL (SLAG) UP TO 6-10" PIECES OBSERVED.	* —	E		
6'	APPROX. BOTTOM OF FILL SOILS +/- 7'	—	E	A x 2	
2.0m 7'	• BROWN, FINE TO COARSE	—	M		
8'	SAND, SOME GRAVEL, TRACE	—	M		
9'	SILT. (POSSIBLY NATIVE SOILS)	—	D		
10'	END OF EXPLORATION AT				
11'	9' (ON PROBABLE BEDROCK)				
12'	— BUCKET REFUSAL —				
13'					
14'	* BLACK SLAG FILL CONTAINS RED BRICK PIECES AND TRACES OF WOOD SPLINTERS.				
15'					

Remarks: (1) GROUND SURFACE ELEVATIONS ESTIMATED IN THE FIELD BY GEODESIGN.
(2) LARGE BOULDERS (UP TO 4'ø) EMOVED FROM EXISTING GROUND SURFACE PRIOR TO EXCAVATION. A TOTAL OF THREE BOULDERS WERE REMOVED.
(3) BEDROCK ESTIMATED AT 9' DEPTH BASED ON BUCKET REFUSAL AND NEARBY OUTCROPS

Test Pit Plan	Boulder Count	Proportions Used	Abbreviations	Groundwater
13' 4.5' [9'] North	Size Range / Desig.: 6-18" A; 18-36" B; >36" C	Trace (Tr.) 0-10%; Little (Li.) 10-20%; Some (So.) 20-35%; And 35-50%	F-Fine; M-Medium; C-Coarse; F/M-Fine to Medium; F/C-Fine to Coarse; V-Very	Elapsed Time: NONE OBSERVED; Depth: —
Est. Vol. Excavated: 19.5 yd³	Excavation Effort: E = Easy; M = Moderate; D = Difficult			

Test Pit Field Log

GeoDesign, Inc. 54 Main Street Windsor, Vermont 05089	Project Name: ROUTE 125 BRIDGE REDIMT(8) MIDDLEBURY, VERMONT	Test Pit No: TP-5	File No.: 750-0810
		Date: 8/1/03	
Engineer: JASON GAUDETTE	Contractor: MARKOWSKI EXCAVATING		
	Operator: LINDY BOVEY	Model: EX170	Ground Elev. +/- 163.5m
	Make: VOLVO		Time Started: 1000
Weather: RAIN ~60's	Capacity: +/- 1 C.Y. BUCKET	Reach: +/- 23'	Time Stopped: 0930

Depth 0'	Soil Description	Field Testing (PID)	Excavation Effort	Boulder Count Qty. Class	Remark No.
1'	+/- 1.5' • DARK BROWN TOPSOIL W/ ROOTS,	—	E		1
2'	GRADING INTO GRAVEL SILT SAND	—	E	A x 6	
3'	+/- 2' • ORANGE BROWN, FINE TO MED. SAND, SOME GRAVEL, LITTLE	—	M	B x 4	
1.0m 4'	SILT. (WITH COBBLES AND BOULDERS) +/- 4'	—	D		
5'	END OF EXPLORATION				
6'	AT 2' (WEST) AND 4' (EAST)				
2.0m 7'	— BUCKET REFUSAL ON				
8'	PROBABLE BEDROCK —				
9'					
10'					
11'					
12'					
13'					
14'					
15'					

Remarks: (1) GROUND SURFACE ELEVATIONS ESTIMATED IN THE FIELD BY GEODESIGN.

Test Pit Plan	Boulder Count	Proportions Used	Abbreviations	Groundwater
12' 4' [2' 1'] North	Size Range / Desig.: 6-18" A; 18-36" B; >36" C	Trace (Tr.) 0-10%; Little (Li.) 10-20%; Some (So.) 20-35%; And 35-50%	F-Fine; M-Medium; C-Coarse; F/M-Fine to Medium; F/C-Fine to Coarse; V-Very	Elapsed Time: NONE OBSERVED; Depth: —
Est. Vol. Excavated: 8.3 yd³	Excavation Effort: E = Easy; M = Moderate; D = Difficult			

Vanasse Hangen Brustlin, Inc.

PROJECT NAME: MIDDLEBURY	
PROJECT NUMBER: RS 0174(8)	
FILE NAME: z78f217borlog.dgn	PLOT DATE: 8/27/2013
PROJECT LEADER: M.A. COLGAN	DRAWN BY: B.J. MASSE
DESIGNED BY: VTRANS	CHECKED BY: G.S. GOODRICH
BORING LOGS (7 OF 7)	SHEET 45 OF 104

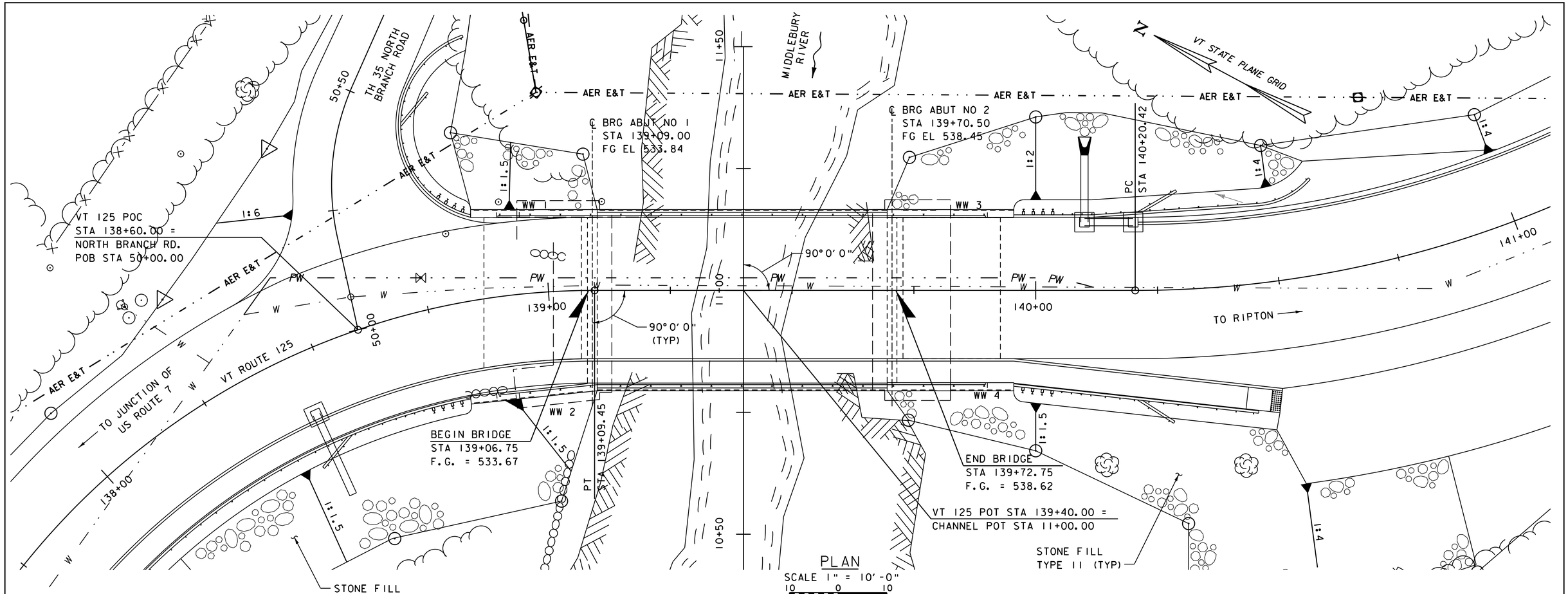

PLAN

SCALE 1" = 10′-0"

10 0 10

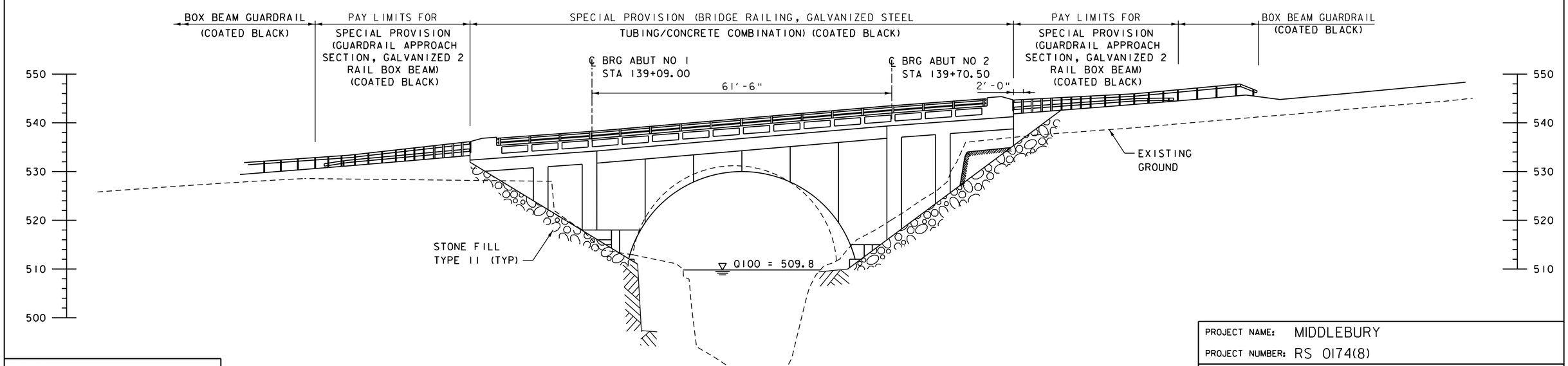

ELEVATION AT DOWNSTREAM FASCIA

SCALE 1" = 10′-0"

DATUM

VERTICAL	NAVD 88
HORIZONTAL	NAD 83 (92)

VHB Vanasse Hangen Brustlin, Inc.

PROJECT NAME: MIDDLEBURY

PROJECT NUMBER: RS 0174(8)

FILE NAME: z78f217pe.dgn	PLOT DATE: 8/27/2013
PROJECT LEADER: M.A. COLGAN	DRAWN BY: B.J. MASSE
DESIGNED BY: G.S. GOODRICH	CHECKED BY: G.S. GOODRICH
PLAN AND ELEVATION (BRIDGE)	SHEET 46 OF 104

VHB 57438

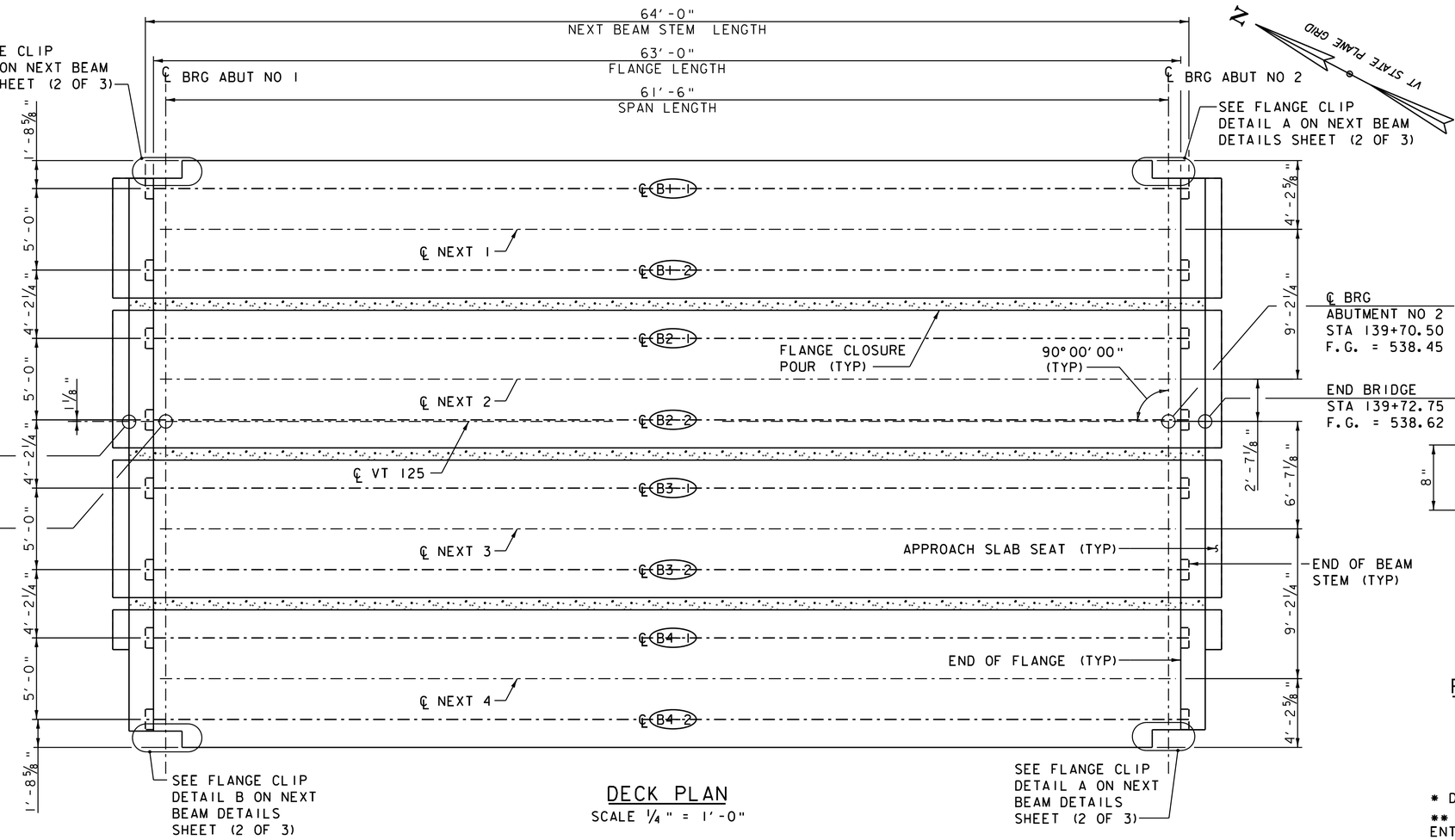

DECK PLAN

SCALE ¼" = 1'-0"

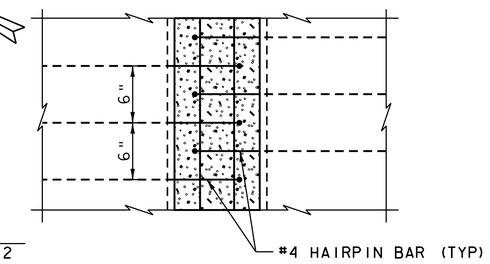

PLAN

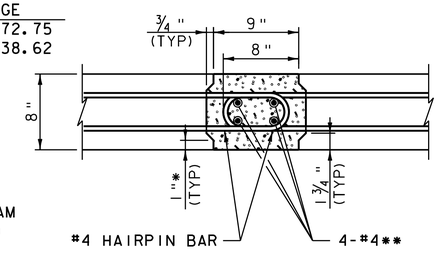

SECTION

FLANGE CONNECTION DETAILS

SCALE 1½" = 1'-0"

= SPECIAL PROVISION (HIGH PERFORMANCE CONCRETE, RAPID SET)

* DIMENSIONS ARE TO KEY IN JOINT

** FOUR #4 BARS SHALL BE PLACED AS SHOWN ALONG ENTIRE LENGTH OF JOINT. PAYMENT SHALL BE INCIDENTAL TO SPECIAL PROVISION (PRESTRESSED CONCRETE NEXT D BEAMS) (NEXT 28D)

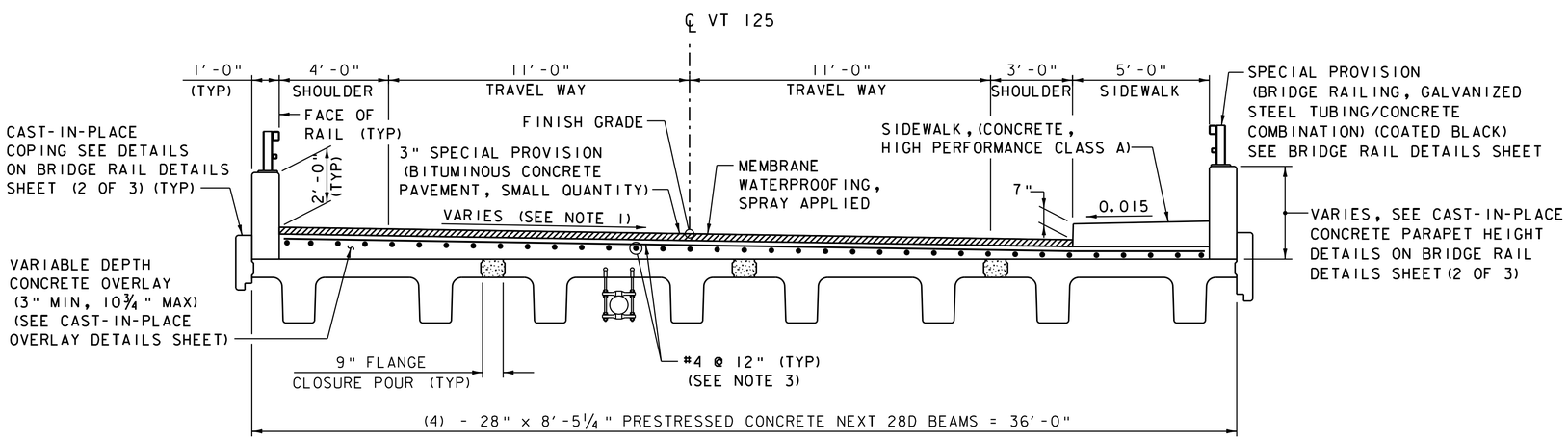

TYPICAL BRIDGE SECTION

SCALE: ⅜" = 1'-0"

(PRECAST ARCH AND PANELS NOT SHOWN FOR CLARITY)

NOTES:

1. CROSS SLOPE VARIES, SEE BANKING DIAGRAM ON PROFILE AND BANKING DIAGRAM SHEET (1 OF 2).
2. SEE TYPICAL BRIDGE SECTION SHEET FOR ADDITIONAL DIMENSIONING.
3. REINFORCING IN CAST-IN-PLACE OVERLAY SHALL FOLLOW THE SUPERELEVATION OF THE BRIDGE.

VHB Vanasse Hangen Brustlin, Inc.

PROJECT NAME: MIDDLEBURY	
PROJECT NUMBER: RS 0174(8)	
FILE NAME: z78f217sup.dgn	PLOT DATE: 8/27/2013
PROJECT LEADER: M.A. COLGAN	DRAWN BY: B.J. MASSE
DESIGNED BY: K.G. KRETSCH	CHECKED BY: G.S. GOODRICH
FRAMING PLAN	SHEET 47 OF 104

VHB 57438

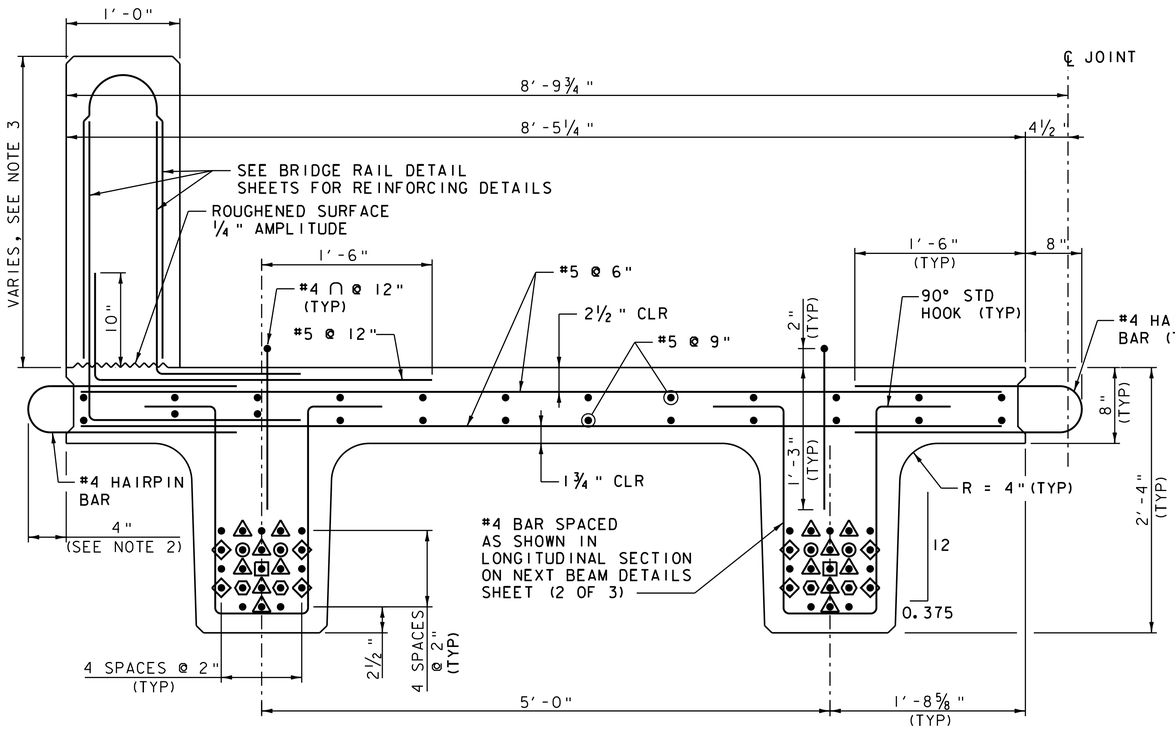

NEXT BEAM 1

SCALE 1½" = 1'-0"

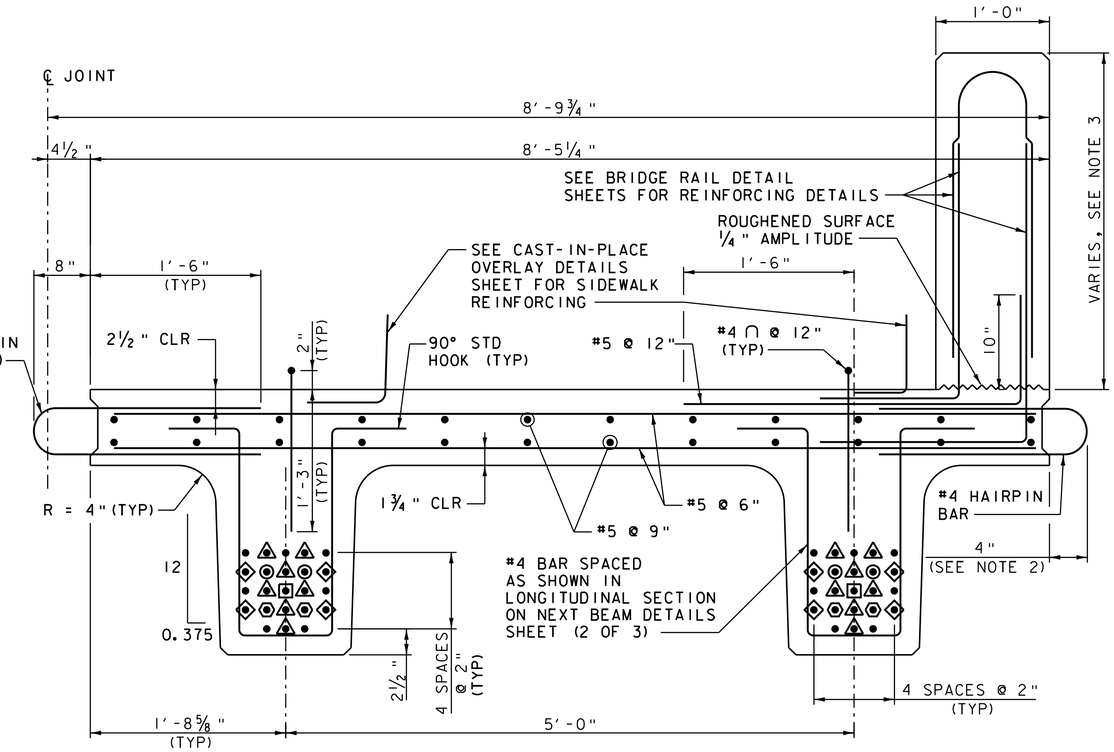

NEXT BEAM 4

SCALE 1½" = 1'-0"

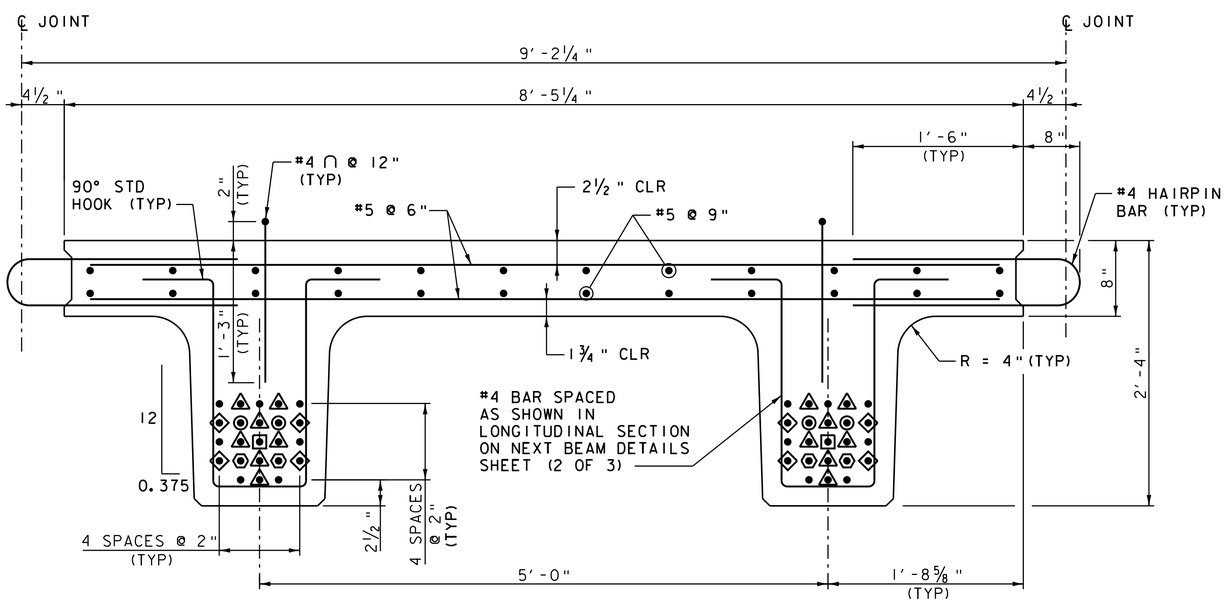

NEXT BEAM 2 & 3

SCALE 1½" = 1'-0"

- ◉ - DEBONDED 4'
- ▣ - DEBONDED 6'
- ◈ - DEBONDED 12'
- ◬ - DEBONDED 6"
- ◇ - 1'-6" STRAND CUT LONG

NOTE:

NF = NEAR FACE
FF = FAR FACE
EF = EACH FACE
▲ = CUT TO FIT IN FIELD
3" CLEAR, UNLESS OTHERWISE SPECIFIED ON THE PLANS.
2'-2" BAR LAP UNLESS OTHERWISE SPECIFIED ON THE PLANS.

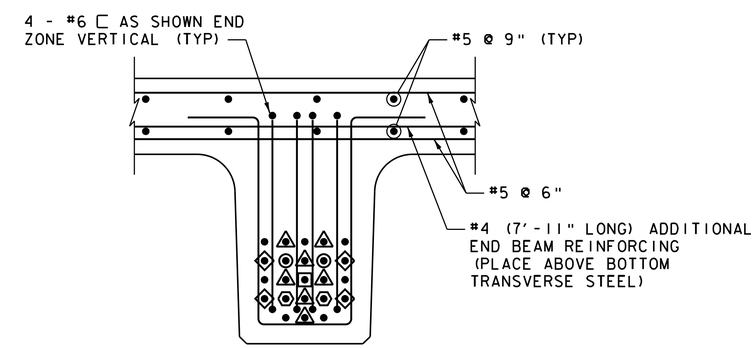

END SECTION

SCALE 1½" = 1'-0"

NOTES:

1. LEAVE FOUR STRANDS 1'-6" LONG PER STEM AS SHOWN ON NEXT BEAM DETAILS SHEET (3 OF 3).
2. SEE BRIDGE RAIL DETAILS (2 OF 3) FOR CAST-IN-PLACE COPING DETAILS.
3. SEE CAST-IN-PLACE CONCRETE PARAPET HEIGHT DETAILS ON BRIDGE RAIL DETAILS SHEET (2 OF 3).

VHB Vanasse Hangen Brustlin, Inc.

PROJECT NAME: MIDDLEBURY	
PROJECT NUMBER: RS 0174(8)	
FILE NAME: z78f217sup.dgn	PLOT DATE: 8/27/2013
PROJECT LEADER: M.A. COLGAN	DRAWN BY: K.D. WENTWORTH
DESIGNED BY: K.G. KRETSCH	CHECKED BY: G.S. GOODRICH
NEXT BEAM DETAILS (1 OF 3)	SHEET 48 OF 104

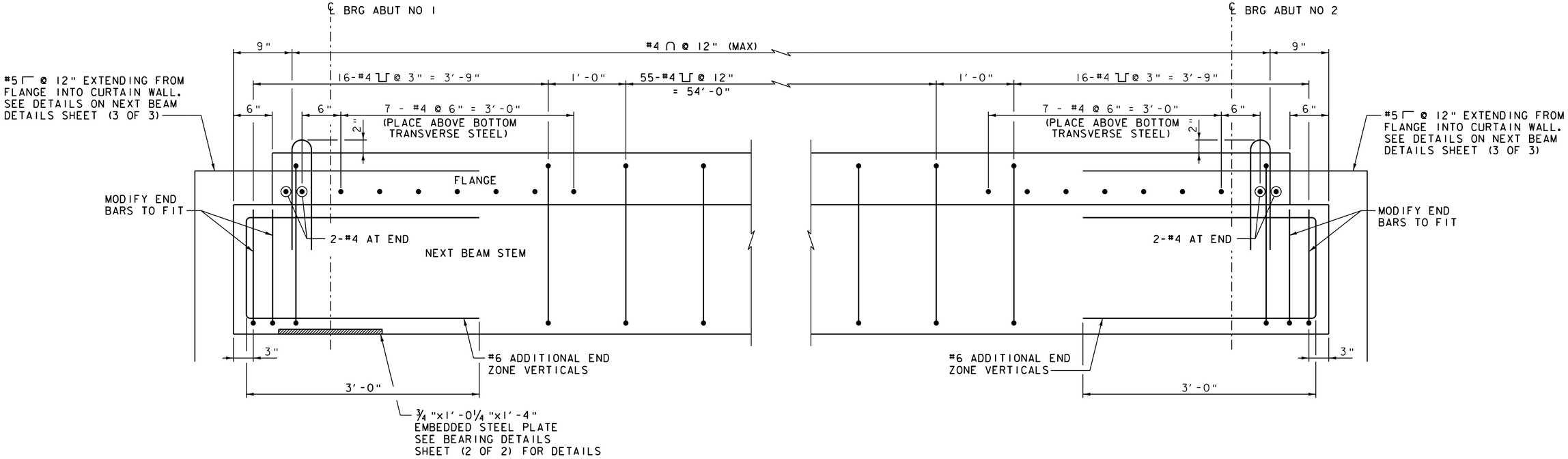

NOTE: TYPICAL REINFORCING BARS IN FLANGE OMITTED FOR CLARITY

ADDITIONAL END BEAM REINFORCING LONGITUDINAL SECTION

SCALE 1 1/2" = 1'-0"

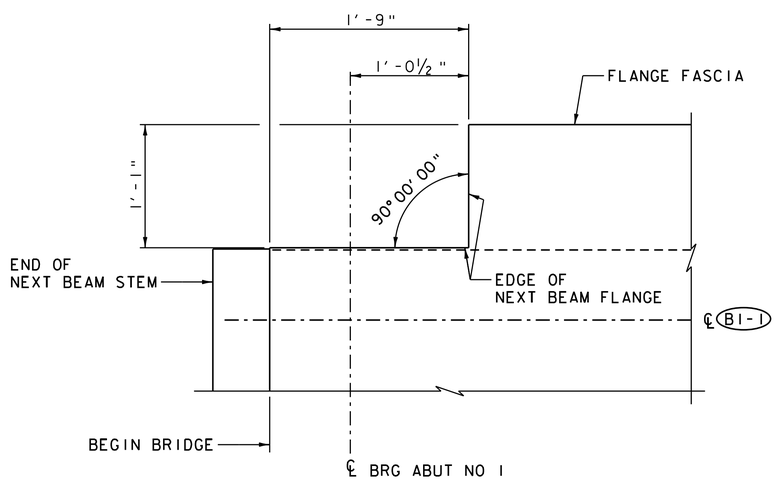

FLANGE CLIP DETAIL A

(NEXT BEAM 1 AT ABUTMENT NO 1 SHOWN, NEXT BEAM 1 AT ABUTMENT NO 2 AND NEXT BEAM 4 AT ABUTMENT NO 2 SIMILAR)

SCALE 1 1/2" = 1'-0"

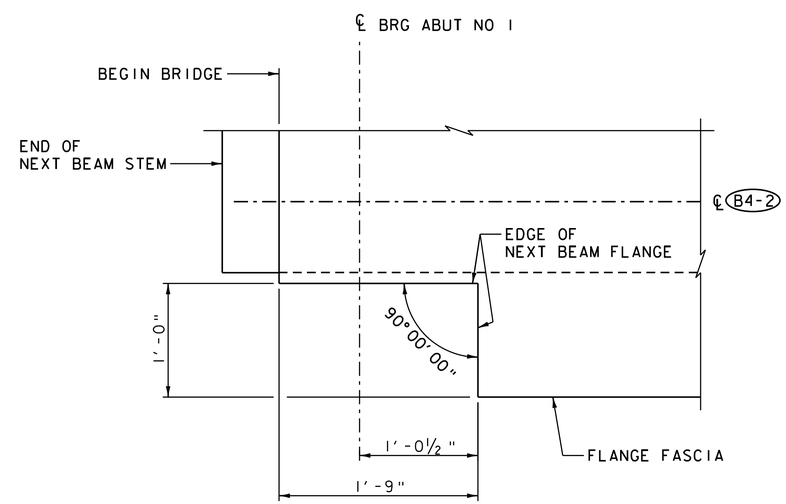

FLANGE CLIP DETAIL B

(NEXT BEAM 4 AT ABUTMENT NO 1)

SCALE 1 1/2" = 1'-0"

Vanasse Hangen Brustlin, Inc.

PROJECT NAME: MIDDLEBURY	
PROJECT NUMBER: RS 0174(8)	
FILE NAME: z78f217sup.dgn	PLOT DATE: 8/27/2013
PROJECT LEADER: M.A. COLGAN	DRAWN BY: K.D. WENTWORTH
DESIGNED BY: K.G. KRETSCH	CHECKED BY: G.S. GOODRICH
NEXT BEAM DETAILS (2 OF 3)	SHEET 49 OF 104

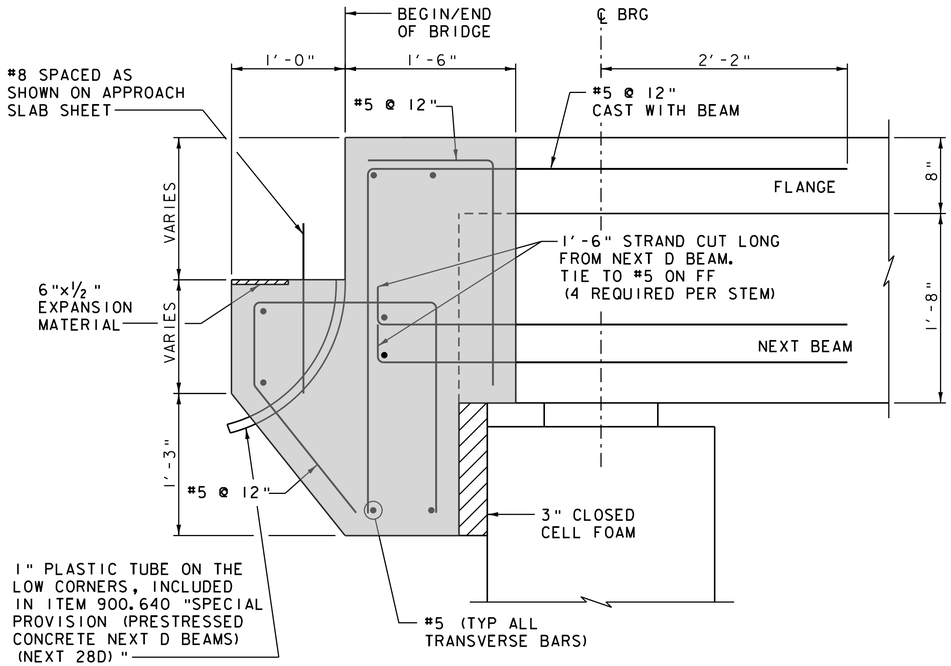

PRECAST CONCRETE CURTAIN WALL REINFORCING TYPICAL

SCALE 1½" = 1'-0"

= LIMITS OF PRECAST CONCRETE CURTAIN WALL

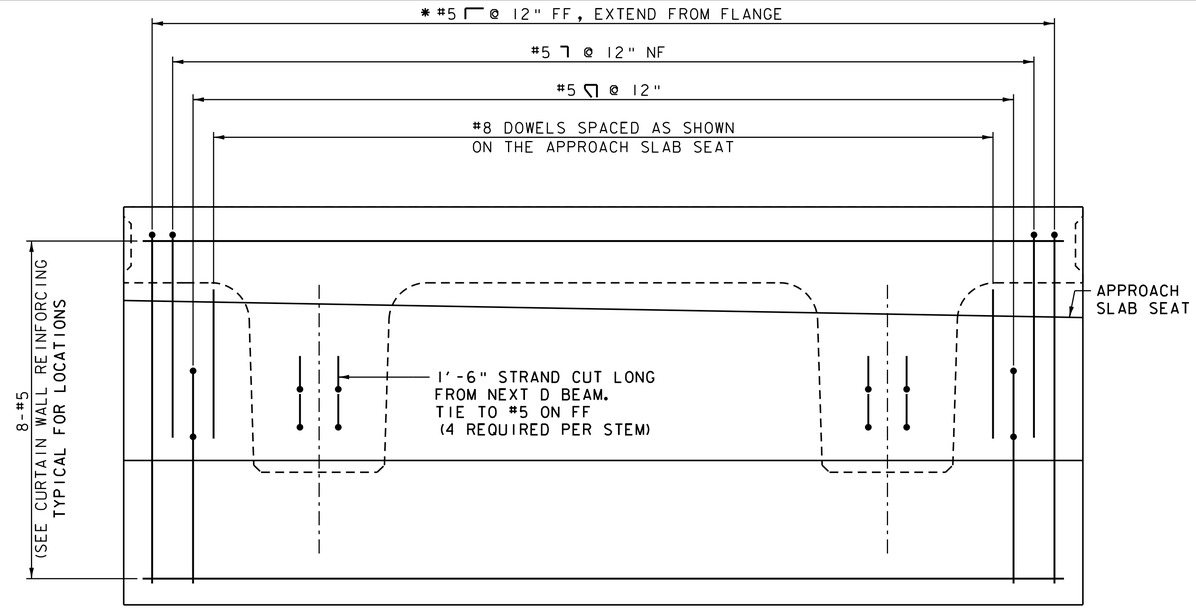

* 12 ADDITIONAL BARS SHALL BE USED AT THE JOINT LOCATIONS. PAYMENT SHALL BE INCIDENTAL TO ITEM 900.640 SPECIAL PROVISION (PRESTRESSED CONCRETE NEXT D BEAMS) (NEXT 28D).

PRECAST CONCRETE CURTAIN WALL REINFORCING ELEVATION

SCALE 1½" = 1'-0"

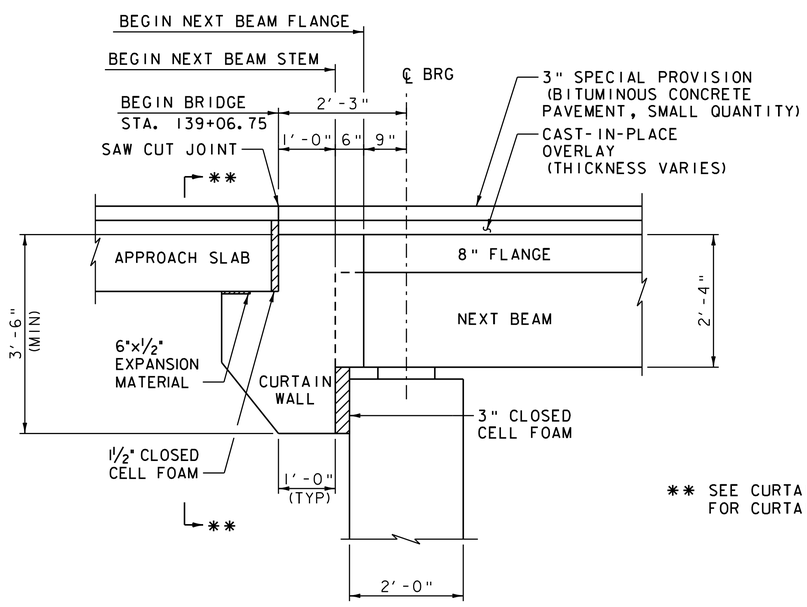

** SEE CURTAIN WALL DETAILS SHEET (2 OF 2) FOR CURTAIN WALL END VIEWS

BRIDGE END DETAIL

(ABUT NO 1 SHOWN, ABUT NO 2 SIMILAR, OPPOSITE HAND)

SCALE ¾" = 1'-0"

NOTE:

NF = NEAR FACE
FF = FAR FACE
EF = EACH FACE
▲ = CUT TO FIT IN FIELD
3" CLEAR, UNLESS OTHERWISE SPECIFIED ON THE PLANS.
2'-2" BAR LAP UNLESS OTHERWISE SPECIFIED ON THE PLANS.

PROJECT NAME: MIDDLEBURY	
PROJECT NUMBER: RS 0174(8)	
FILE NAME: z78f217sub.dgn	PLOT DATE: 8/27/2013
PROJECT LEADER: M.A. COLGAN	DRAWN BY: K.D. WENTWORTH
DESIGNED BY: K.G. KRETSCH	CHECKED BY: G.S. GOODRICH
NEXT BEAM DETAILS (3 OF 3)	SHEET 50 OF 104

VHB Vanasse Hangen Brustlin, Inc.

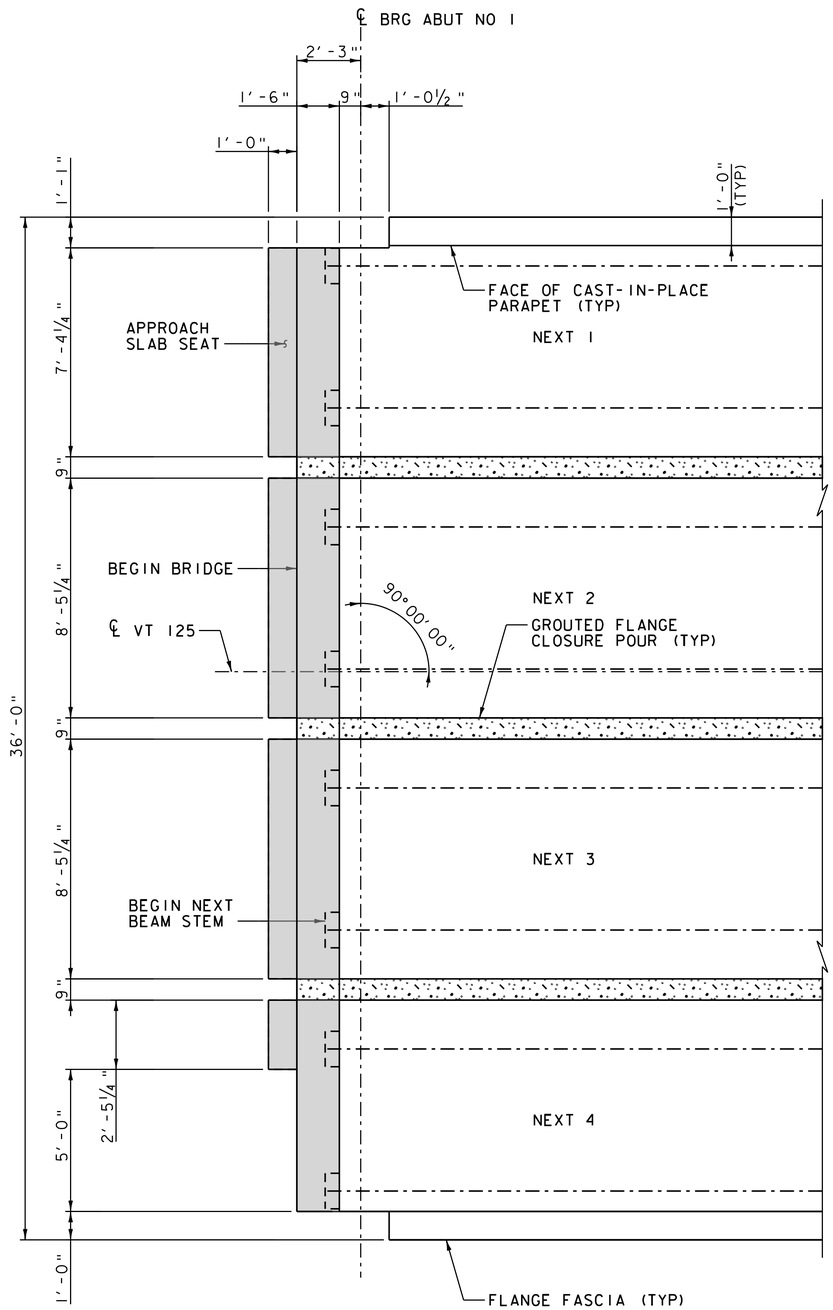

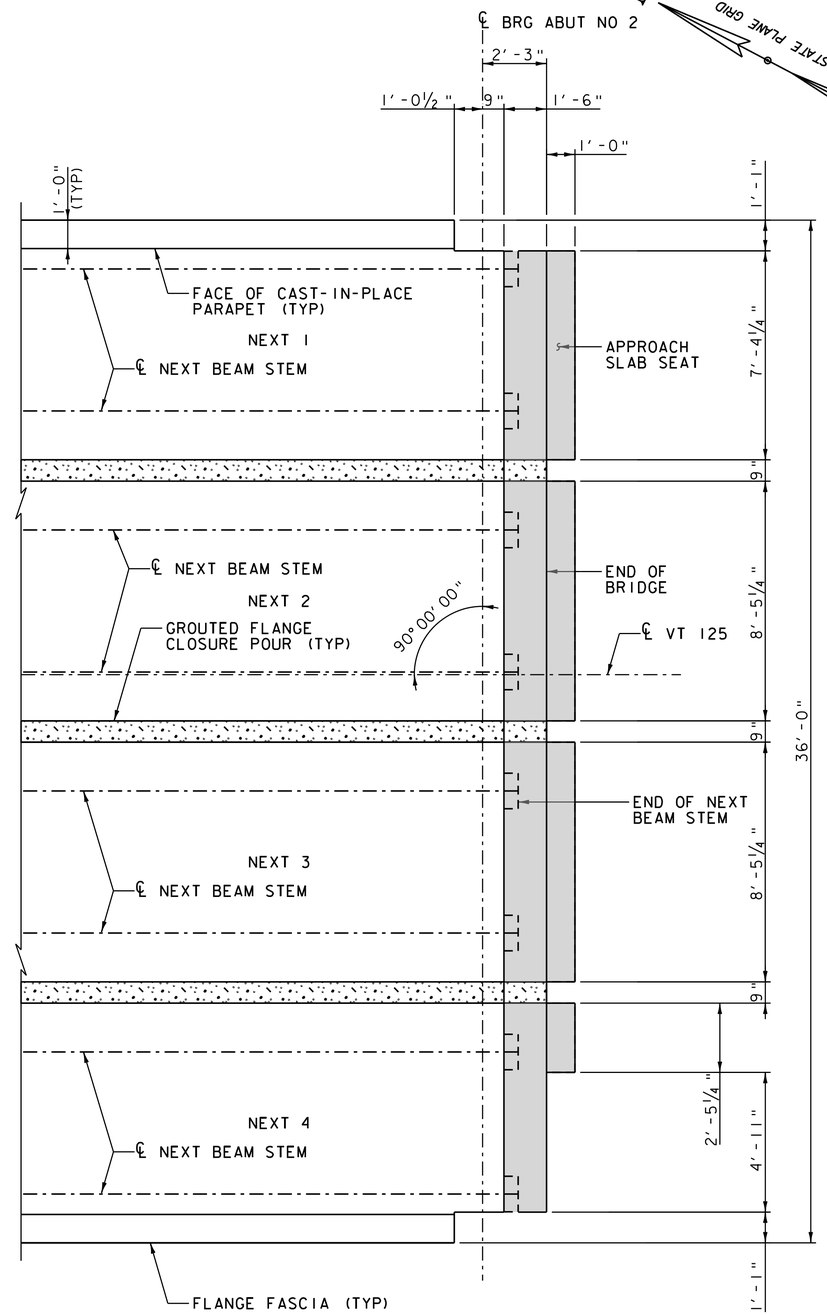

NEXT BEAM CURTAIN WALL PLAN

SCALE ⅜" = 1'-0"

▭ - LIMITS OF PRECAST CONCRETE CURTAIN WALL

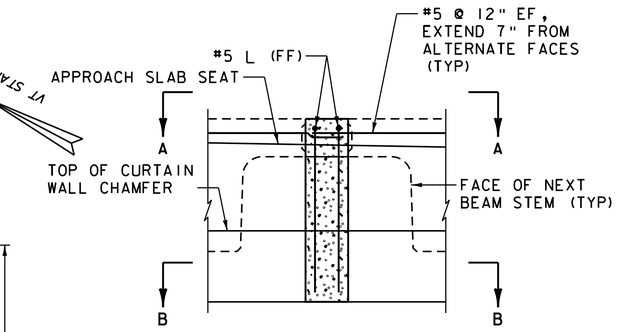

CURTAIN WALL CLOSURE POUR ELEVATION

SCALE ¾" = 1'-0"

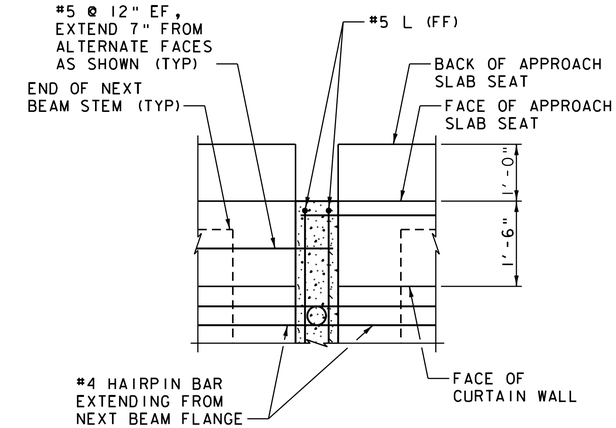

SECTION A-A

SCALE ¾" = 1'-0"

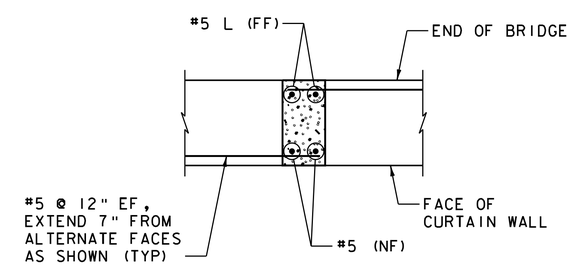

SECTION B-B

SCALE ¾" = 1'-0"

▭ = GROUTING SHEAR KEYS

NOTES:

1. SEE CURTAIN WALL DETAIL SHEET (2 OF 2) FOR VERTICAL CURTAIN WALL DIMENSIONS AND ELEVATIONS.
2. SEE NEXT BEAM DETAILS SHEET (3 OF 3) FOR PRECAST CURTAIN WALL SECTION AND REINFORCING INFORMATION.

VHB Vanasse Hangen Brustlin, Inc.

PROJECT NAME: MIDDLEBURY	
PROJECT NUMBER: RS 0174(8)	
FILE NAME: z78f217sup.dgn	PLOT DATE: 8/27/2013
PROJECT LEADER: M.A. COLGAN	DRAWN BY: K.D. WENTWORTH
DESIGNED BY: K.G. KRETSCH	CHECKED BY: G.S. GOODRICH
CURTAIN WALL DETAILS (1 OF 2)	SHEET 51 OF 104

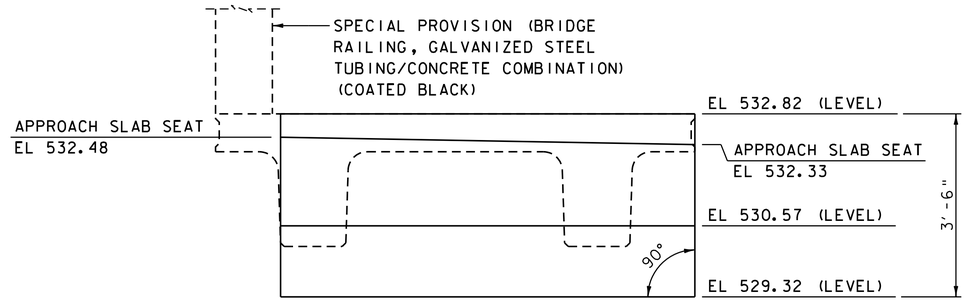

ABUTMENT NO 1, NEXT 1
SCALE ¾" = 1'-0"

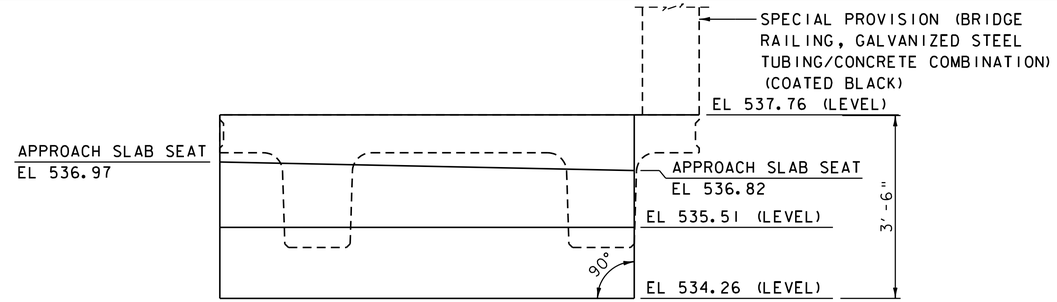

ABUTMENT NO 2, NEXT 1
SCALE ¾" = 1'-0"

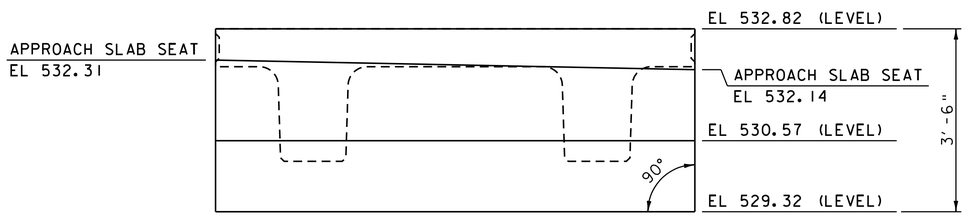

ABUTMENT NO 1, NEXT 2
SCALE ¾" = 1'-0"

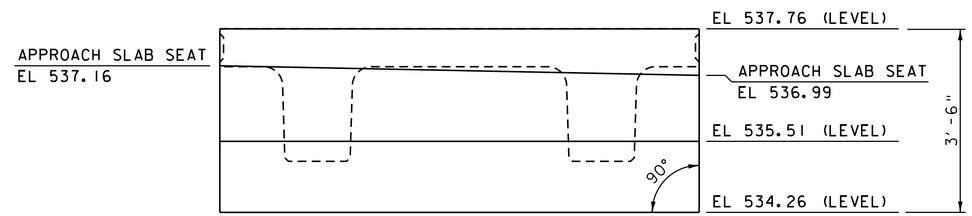

ABUTMENT NO 2, NEXT 2
SCALE ¾" = 1'-0"

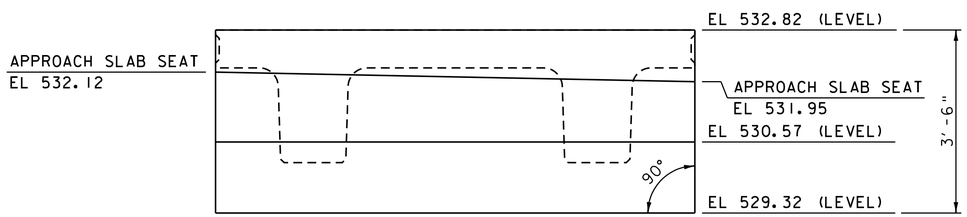

ABUTMENT NO 1, NEXT 3
SCALE ¾" = 1'-0"

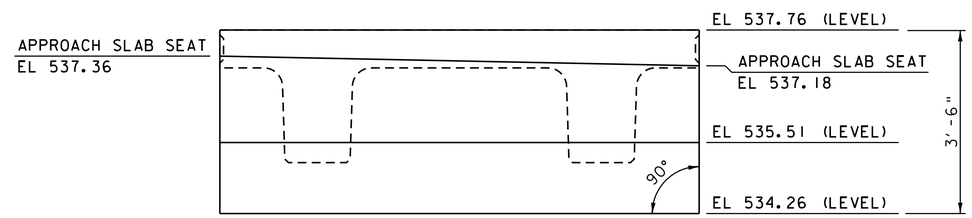

ABUTMENT NO 2, NEXT 3
SCALE ¾" = 1'-0"

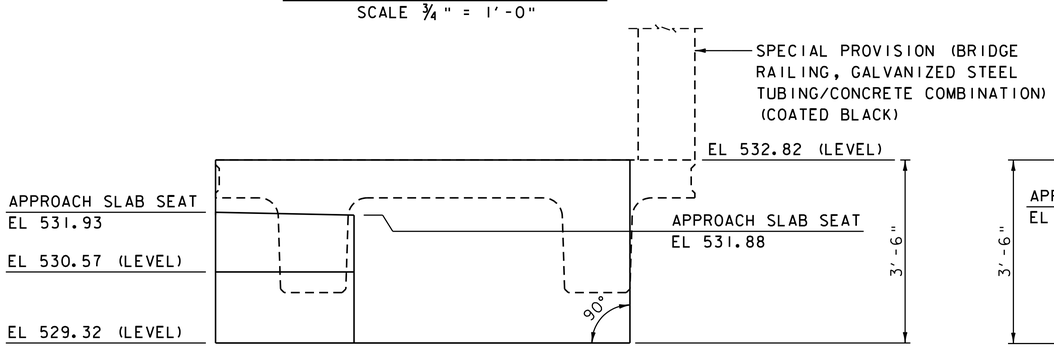

ABUTMENT NO 1, NEXT 4
SCALE ¾" = 1'-0"

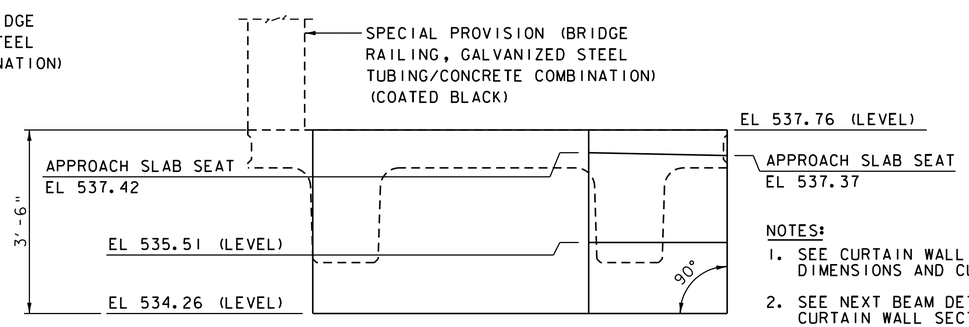

ABUTMENT NO 2, NEXT 4
SCALE ¾" = 1'-0"

NOTES:

1. SEE CURTAIN WALL DETAIL SHEET (1 OF 2) FOR HORIZONTAL DIMENSIONS AND CURTAIN WALL LIMITS.
2. SEE NEXT BEAM DETAILS SHEET (3 OF 3) FOR PRECAST CURTAIN WALL SECTION AND REINFORCING INFORMATION.

Vanasse Hangen Brustlin, Inc.

PROJECT NAME: MIDDLEBURY	
PROJECT NUMBER: RS 0174(8)	
FILE NAME: z78f217sup.dgn	PLOT DATE: 8/27/2013
PROJECT LEADER: M.A. COLGAN	DRAWN BY: K.D. WENTWORTH
DESIGNED BY: K.G. KRETSCH	CHECKED BY: G.S. GOODRICH
CURTAIN WALL DETAILS (2 OF 2)	SHEET 52 OF 104

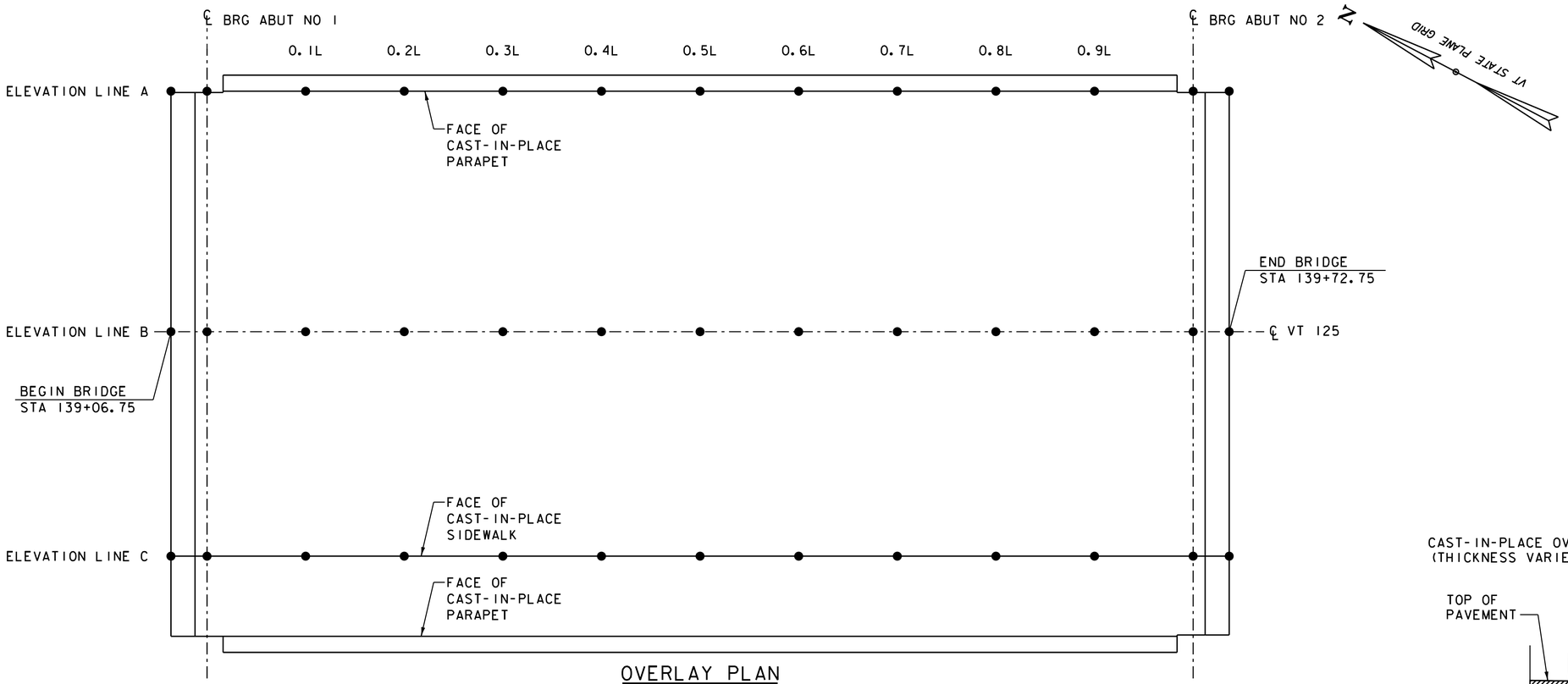

OVERLAY PLAN

SCALE 1/4" = 1'-0"

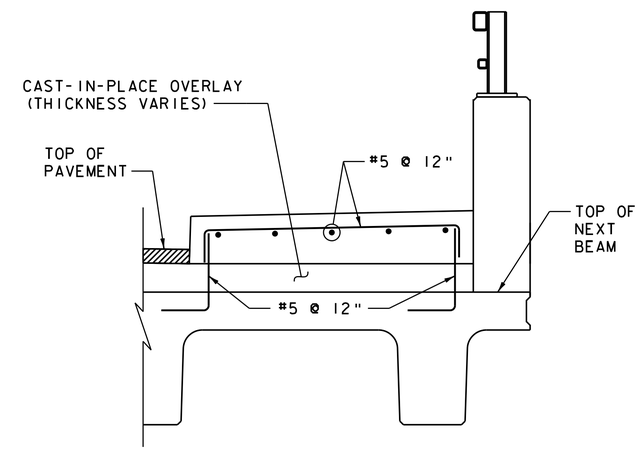

SIDEWALK REINFORCING

SCALE 3/4" = 1'-0"

TOP OF CONCRETE OVERLAY SPOT ELEVATIONS

		BEGIN BRIDGE	℄ BRG ABUT NO 1	0.1L	0.2L	0.3L	0.4L	0.5L	0.6L	0.7L	0.8L	0.9L	℄ BRG ABUT NO 2	END BRIDGE
TOP OF OVERLAY (FINISH GRADE)	A	533.73	533.88	534.28	534.69	535.09	535.49	535.90	536.30	536.70	537.11	537.51	537.91	538.06
	B	533.42	533.59	534.05	534.52	534.98	535.44	535.90	536.36	536.82	537.28	537.75	538.21	538.38
	C	533.13	533.32	533.84	534.35	534.87	535.39	535.90	536.42	536.93	537.45	537.97	538.48	538.67
SUPERIMPOSED DL DEFLECTIONS (FEET)	A, B AND C	0	0	0.01	0.03	0.04	0.04	0.05	0.04	0.04	0.03	0.01	0	0
TOP OF OVERLAY (SCREED ELEVATION)	A	533.73	533.88	534.30	534.71	535.13	535.54	535.94	536.34	536.74	537.13	537.52	537.91	538.06
	B	533.42	533.59	534.07	534.54	535.01	535.48	535.94	536.40	536.86	537.31	537.76	538.21	538.38
	C	533.13	533.32	533.85	534.38	534.91	535.43	535.95	536.46	536.97	537.48	537.98	538.48	538.67
TOP OF NEXT BEAM (ANTICIPATED)	D	532.82	532.99	533.55	534.09	534.59	535.08	535.55	536.00	536.43	536.85	537.23	537.59	537.76
	E	532.82	532.99	533.55	534.09	534.59	535.08	535.55	536.00	536.43	536.85	537.23	537.59	537.76
	F	532.82	532.99	533.55	534.09	534.59	535.08	535.55	536.00	536.43	536.85	537.23	537.59	537.76

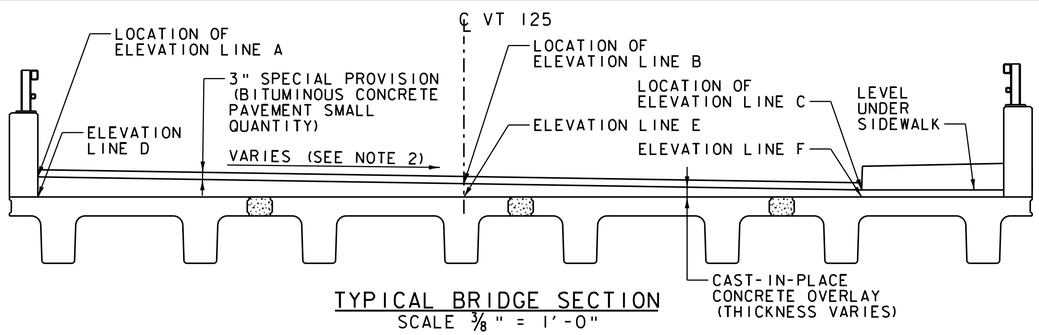

TYPICAL BRIDGE SECTION

SCALE 3/8" = 1'-0"

NOTES:

1. TOP OF OVERLAY (SCREED ELEVATION) ARE FINISH GRADE TOP OF OVERLAY ELEVATIONS PLUS THE ANTICIPATED SUPERIMPOSED DL DEFLECTIONS.
2. CROSS SLOPE VARIES, SEE BANKING DIAGRAM ON PROFILE AND BANKING DIAGRAM SHEET (1 OF 2).
3. TOP OF NEXT BEAM ELEVATIONS ARE GIVEN IN THE FINAL CONDITION AFTER SUPERIMPOSED DEAD LOAD DEFLECTIONS.

Vanasse Hangen Brustlin, Inc.

PROJECT NAME: MIDDLEBURY

PROJECT NUMBER: RS 0174(8)

FILE NAME: z78f217sup.dgn
PROJECT LEADER: M.A. COLGAN
DESIGNED BY: K.G. KRETSCH
CAST-IN-PLACE OVERLAY DETAILS

PLOT DATE: 8/27/2013
DRAWN BY: B.J. MASSE
CHECKED BY: G.S. GOODRICH
SHEET 53 OF 104

VHB 57438

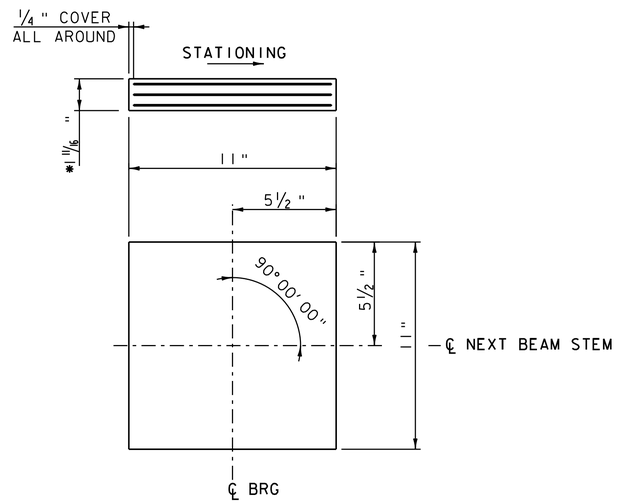

*2 - 1/2" INTERIOR ELASTOMER LAYERS
2 - 1/4" EXTERIOR ELASTOMER LAYERS
3 - 1/16" STEEL REINFORCING PLATES

ELASTOMERIC BEARING (FIXED)

SCALE 3" = 1'-0"

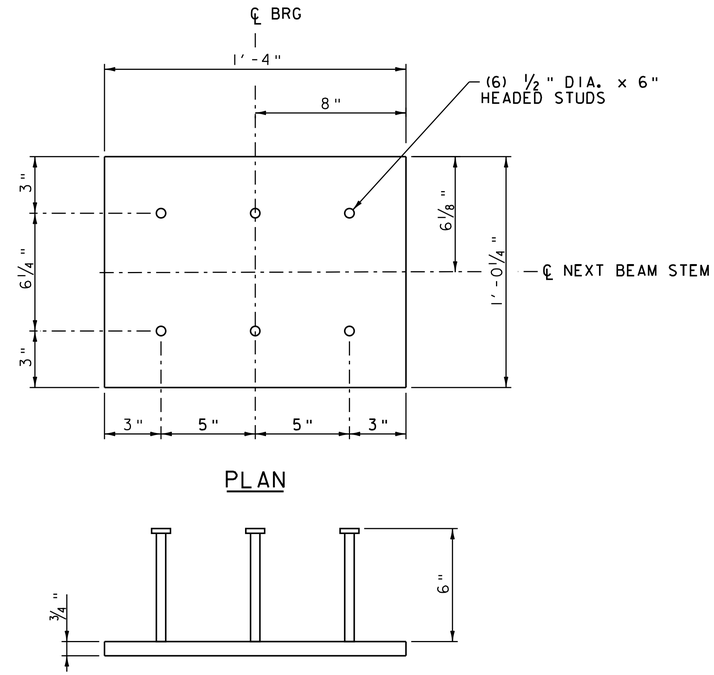

EMBEDDED STEEL PLATE

SCALE 3" = 1'-0"

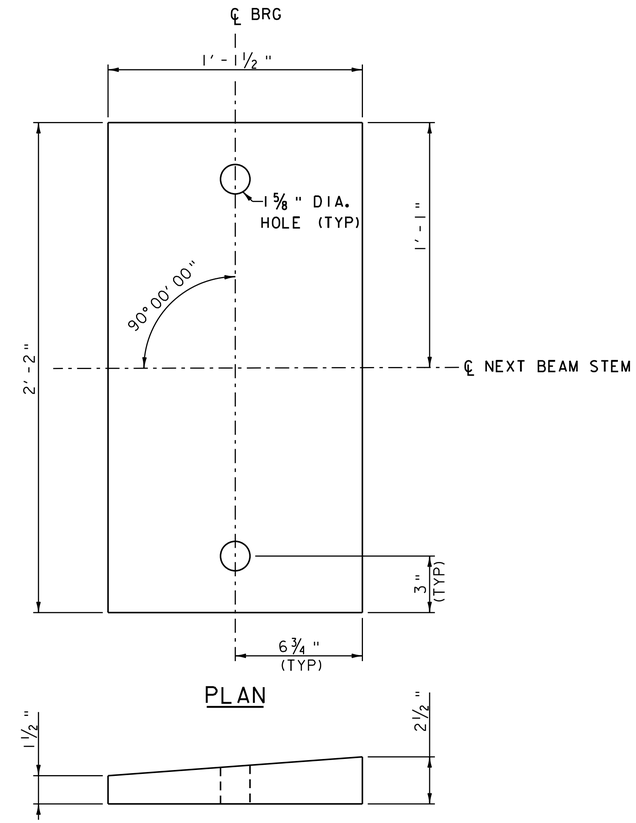

BEVELED SOLE PLATE

SCALE 3" = 1'-0"

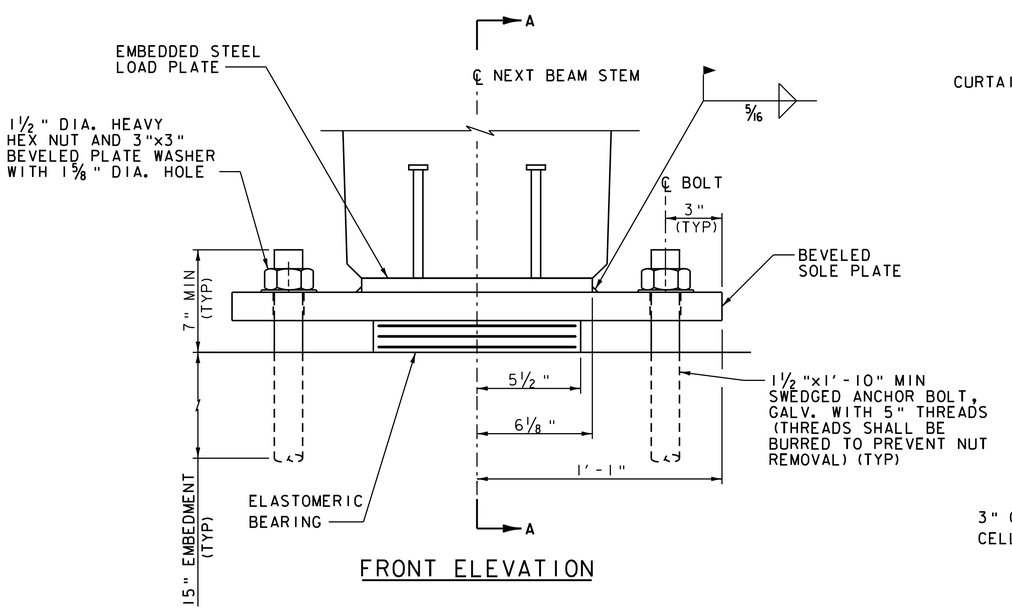

FRONT ELEVATION

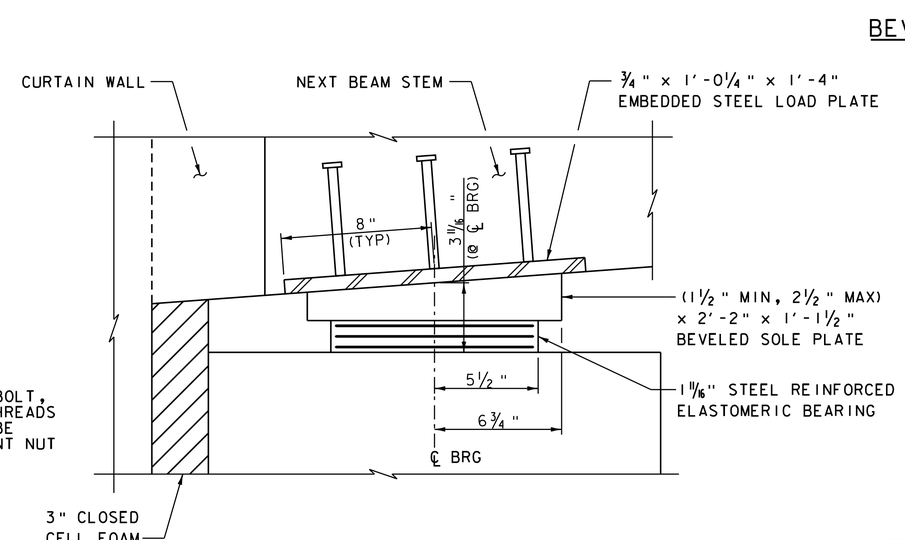

SECTION A-A

ABUTMENT NO 1 - FIXED BEARING DETAILS

SCALE 3" = 1'-0"

NOTES:

1. SEE BEARING DETAILS SHEET (2 OF 2) FOR ELASTOMERIC BEARING NOTES.
2. EMBEDDED STEEL LOAD PLATES SHALL BE PAID UNDER ITEM 900.640 "SPECIAL PROVISION (PRESTRESSED CONCRETE NEXT D BEAMS) (NEXT 28 D).

VHB Vanasse Hangen Brustlin, Inc.

PROJECT NAME: MIDDLEBURY	
PROJECT NUMBER: RS 0174(8)	
FILE NAME: z78f217brg.dgn	PLOT DATE: 8/27/2013
PROJECT LEADER: M.A. COLGAN	DRAWN BY: B.J. MASSE
DESIGNED BY: K.G. KRETSCH	CHECKED BY: G.S. GOODRICH
BEARING DETAILS (1 OF 2)	SHEET 54 OF 104

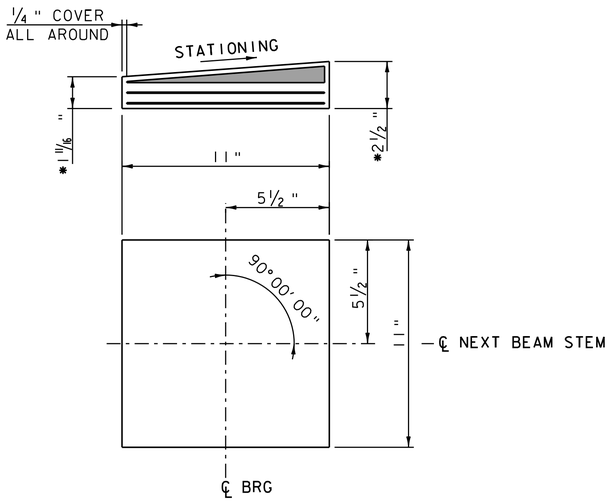

*2 - 1/2 " INTERIOR ELASTOMER LAYERS
2 - 1/4 " EXTERIOR ELASTOMER LAYERS
2 - 1/16 " STEEL REINFORCING PLATES
1 - TAPERED TOP REINFORCING PLATE

ELASTOMERIC BEARING (EXPANSION)

SCALE 3" = 1'-0"

BEARING NOTES:

1. BEARINGS SHALL CONFORM TO THE APPLICABLE SUBSECTIONS OF SECTIONS 531 AND 731.
2. ALL REINFORCEMENT BETWEEN LAYERS OF ELASTOMER SHALL BE STEEL MEETING THE REQUIREMENTS OF SUBSECTION 714.02. ALL INTERNAL STEEL PLATES SHALL BE SAND BLASTED AND FREE OF COATINGS, RUST, AND MILL SCALE. THE PLATES SHALL BE FREE OF SHARP EDGES AND BURRS.
3. STEEL REINFORCED ELASTOMERIC BEARINGS SHALL HAVE A MINIMUM 1/8 " EDGE SEAL OF ELASTOMER INTEGRAL WITH BEARING OVER ALL INTERNAL PLATES.
4. THE ELASTOMER SHALL BE GRADE 60 SHORE A DUROMETER.
5. THE ELASTOMER SHALL MEET THE REQUIREMENTS OF LOW TEMPERATURE ZONE D, GRADE 4.
6. THE CONTRACTOR IS ADVISED TO HAVE A MINIMUM OF 16 - 1/4 "x12 1/2 "x12 1/2 " GALVANIZED STEEL SHIMS AVAILABLE FOR USE FOR ELEVATION ADJUSTMENTS UPON THE SETTING OF THE SUPERSTRUCTURE UNITS. THE SHIMS SHALL BE FABRICATED ACCORDING TO SECTION 531 AND SHALL BE INCLUDED UNDER ITEM 531.17, "BEARING DEVICE ASSEMBLY, STEEL REINFORCED ELASTOMERIC PAD".

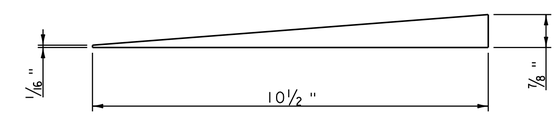

TAPERED TOP PLATE DETAIL

SCALE 6" = 1'-0"

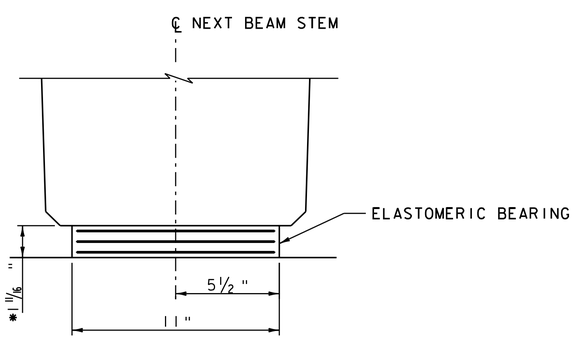

FRONT ELOVATION

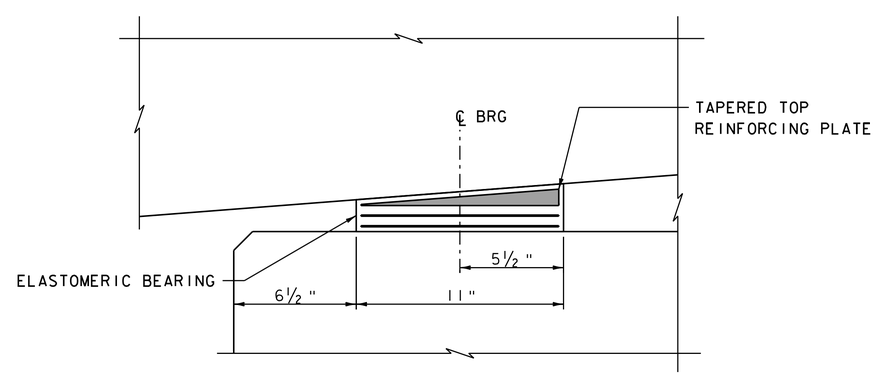

SIDE ELEVATION

ABUTMENT NO 2 - EXPANSION BEARING DETAILS

SCALE 3" = 1'-0"

Vanasse Hangen Brustlin, Inc.

PROJECT NAME: MIDDLEBURY	
PROJECT NUMBER: RS 0174(8)	
FILE NAME: z78f217brg.dgn	PLOT DATE: 8/27/2013
PROJECT LEADER: M.A. COLGAN	DRAWN BY: B.J. MASSE
DESIGNED BY: K.G. KRETSCH	CHECKED BY: G.S. GOODRICH
BEARING DETAILS (2 OF 2)	SHEET 55 OF 104

VHB 57438

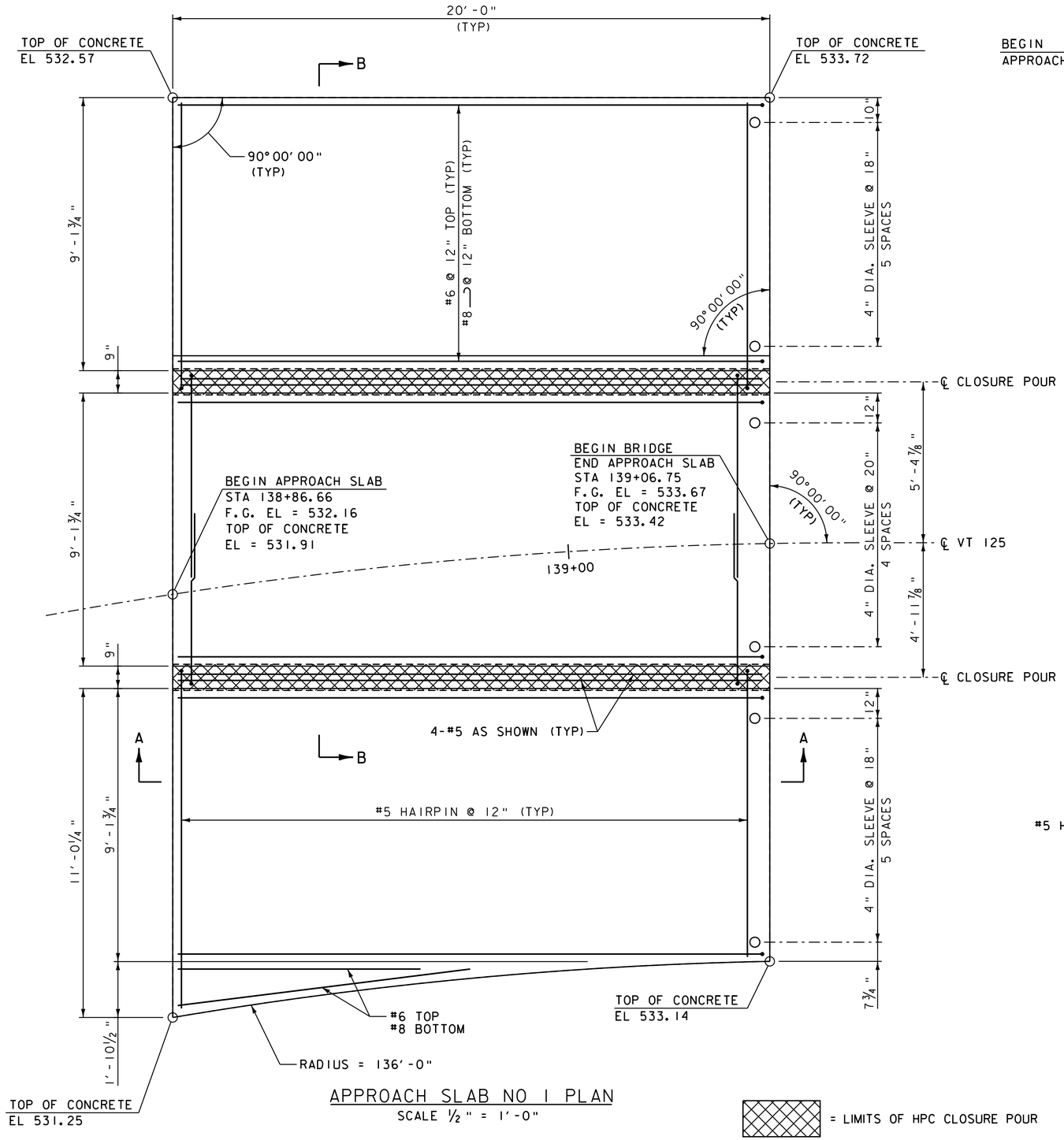

APPROACH SLAB NO 1 PLAN

SCALE ½" = 1'-0"

= LIMITS OF HPC CLOSURE POUR

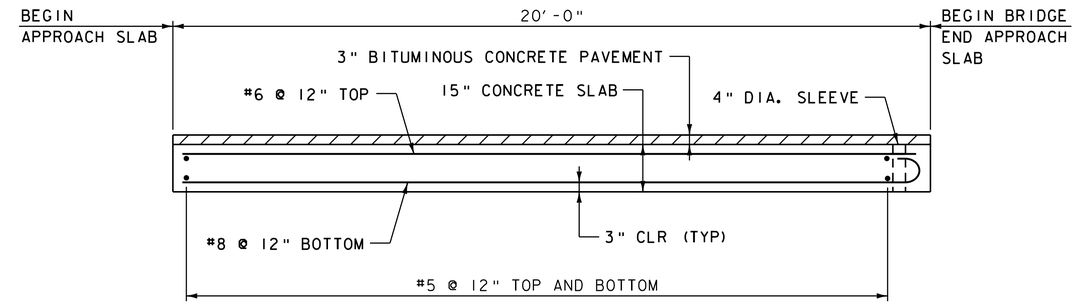

SECTION A-A

SCALE ½" = 1'-0"

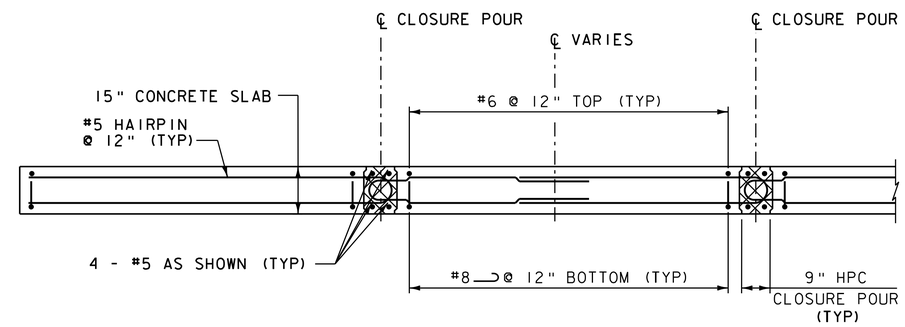

SECTION B-B

SCALE ½" = 1'-0"

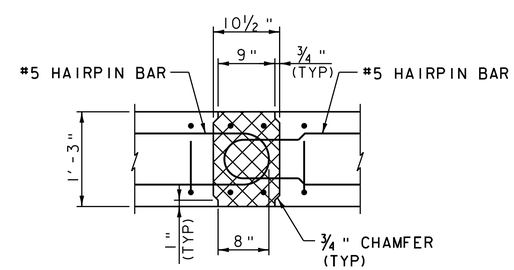

CLOSURE POUR

SCALE 1" = 1'-0"

NOTE:

NF = NEAR FACE
FF = FAR FACE
EF = EACH FACE
▲ = CUT TO FIT IN FIELD
3" CLEAR, UNLESS OTHERWISE SPECIFIED ON THE PLANS.
2'-2" BAR LAP UNLESS OTHERWISE SPECIFIED ON THE PLANS.

NOTES:

1. LIFTING POINTS IN APPROACH SLAB TO BE LOCATED BY FABRICATOR.
2. 4" DIA. SLEEVES FOR APPROACH SLAB DOWELS ARE LOCATED TO AVOID JOINTS IN PRECAST CURTAIN WALLS. SEE CURTAIN WALL DETAILS SHEETS.
3. CONTRACTOR SHALL PROVIDE METHOD AND DETAILS FOR ESTABLISHING CONTINUOUS CONTACT WITH SUBGRADE AND SUPPORT FOR PRECAST APPROACH SLABS WITH FABRICATION DRAWINGS.

VHB Vanasse Hangen Brustlin, Inc.

PROJECT NAME: MIDDLEBURY	
PROJECT NUMBER: RS 0174(8)	
FILE NAME: z78f217slab.dgn	PLOT DATE: 8/27/2013
PROJECT LEADER: M.A. COLGAN	DRAWN BY: B.J. MASSE
DESIGNED BY: L.S. CHERVINCKY	CHECKED BY: G.S. GOODRICH
PRECAST APPROACH SLAB (1 OF 2)	SHEET 56 OF 104

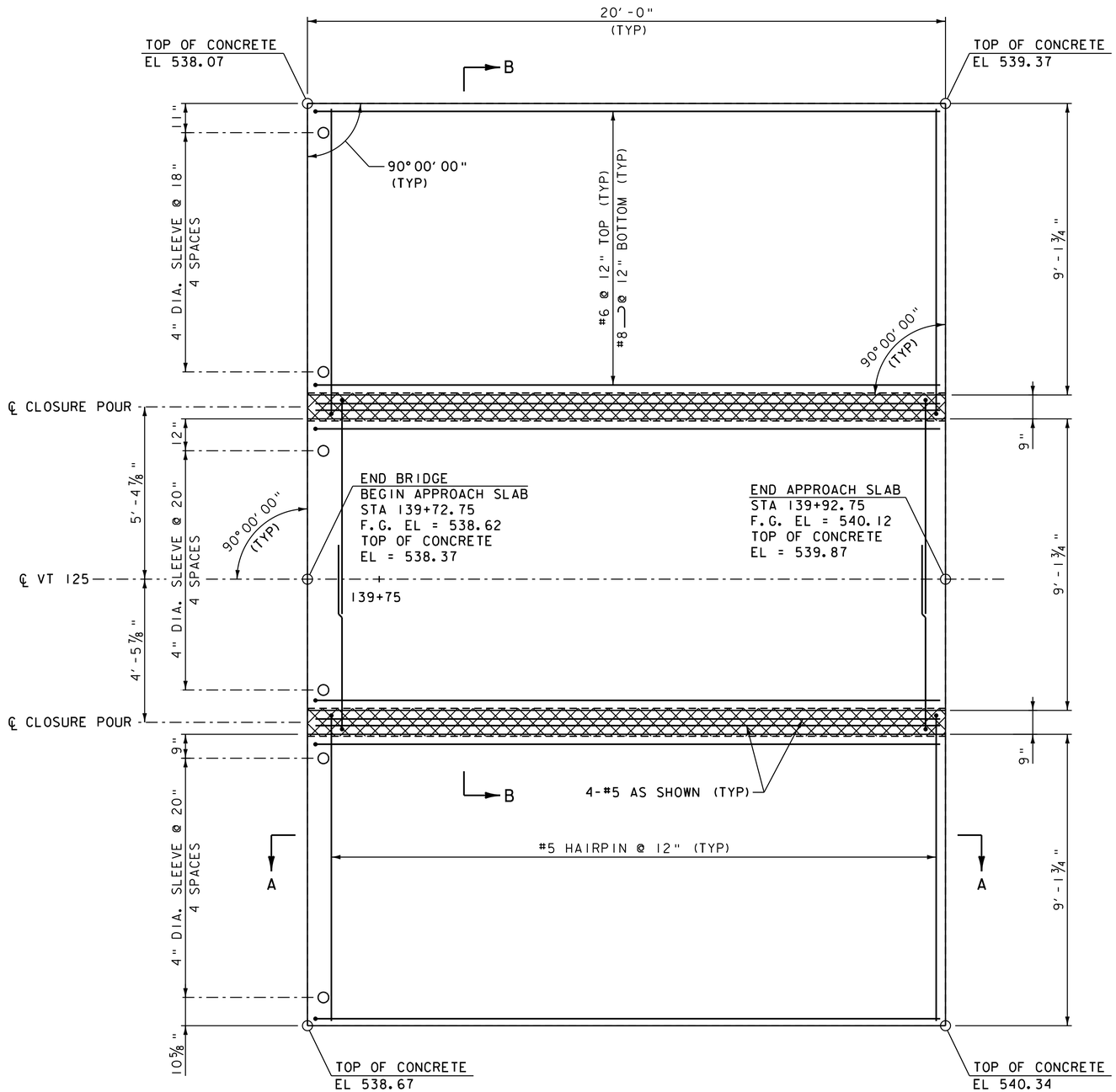

APPROACH SLAB NO 2 PLAN

SCALE ½" = 1'-0"

= LIMITS OF HPC CLOSURE POUR

NOTE:

NF = NEAR FACE
FF = FAR FACE
EF = EACH FACE
▲ = CUT TO FIT IN FIELD
3" CLEAR, UNLESS OTHERWISE SPECIFIED ON THE PLANS.
2'-2" BAR LAP UNLESS OTHERWISE SPECIFIED ON THE PLANS.

NOTES:

1. LIFTING POINTS IN APPROACH SLAB TO BE LOCATED BY FABRICATOR.
2. 4" DIA. SLEEVES FOR APPROACH SLAB DOWELS ARE LOCATED TO AVOID JOINTS IN PRECAST CURTAIN WALLS. SEE CURTAIN WALL DETAILS SHEETS.
3. SEE PRECAST APPROACH SLAB (1 OF 2) FOR CLOSURE POUR, SECTION A-A AND SECTION B-B.
4. CONTRACTOR SHALL PROVIDE METHOD AND DETAILS FOR ESTABLISHING CONTINUOUS CONTACT WITH SUBGRADE AND SUPPORT FOR PRECAST APPROACH SLABS WITH FABRICATION DRAWINGS.

VHB Vanasse Hangen Brustlin, Inc.

PROJECT NAME: MIDDLEBURY	
PROJECT NUMBER: RS 0174(8)	
FILE NAME: z78f217slab.dgn	PLOT DATE: 8/27/2013
PROJECT LEADER: M.A. COLGAN	DRAWN BY: B.J. MASSE
DESIGNED BY: L.S. CHERVINCKY	CHECKED BY: G.S. GOODRICH
PRECAST APPROACH SLAB (2 OF 2)	SHEET 57 OF 104

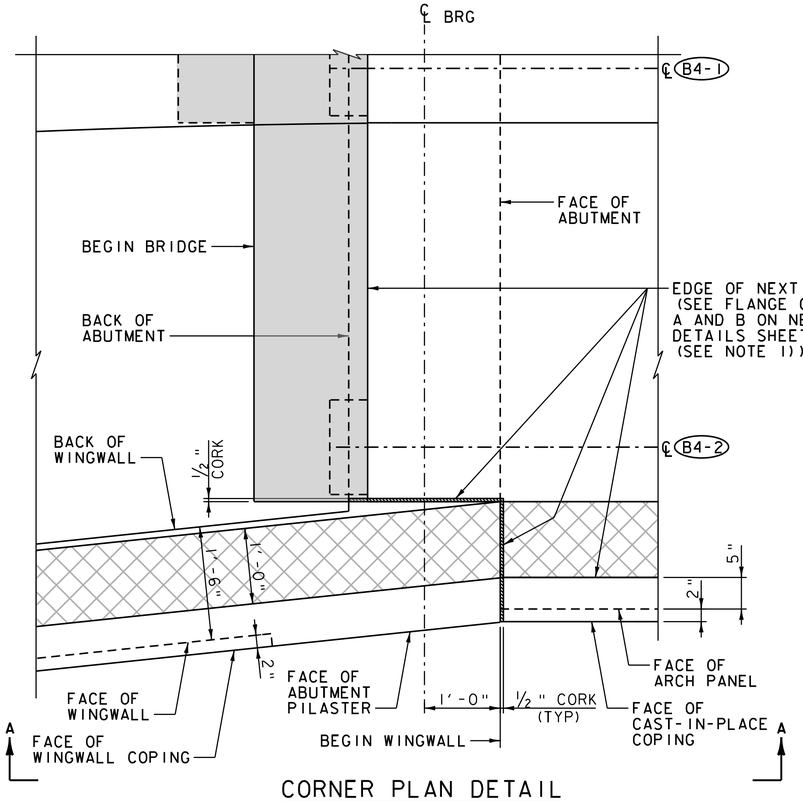

CORNER PLAN DETAIL
WINGWALL NO 2
SCALE 1" = 1'-0"

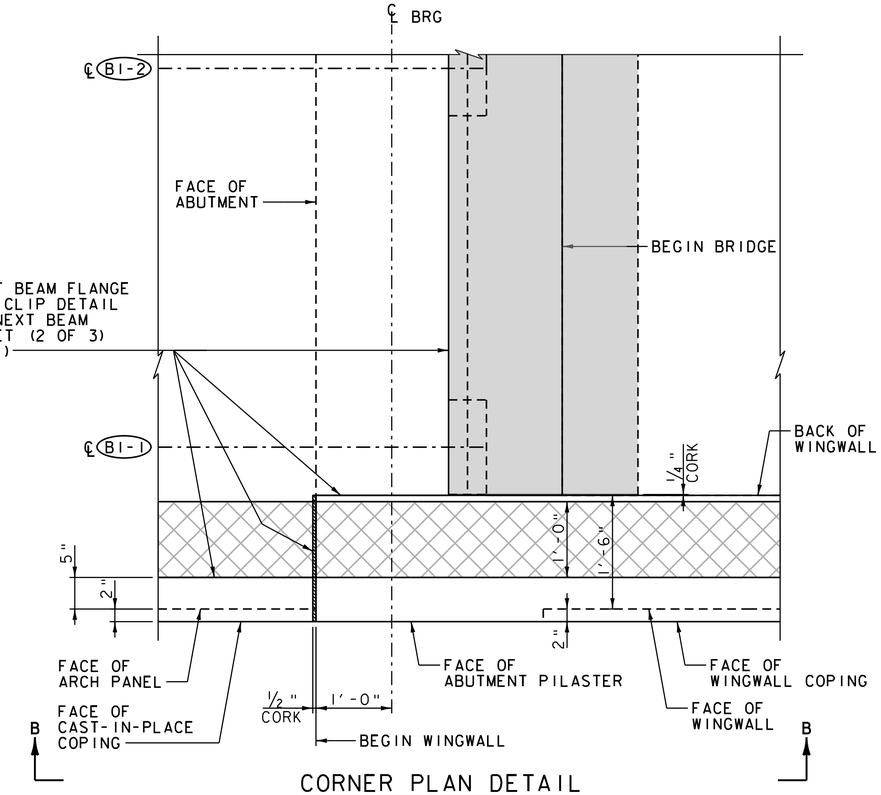

CORNER PLAN DETAIL
(WINGWALL NO 1 SHOWN, WINGWALLS NO 3 AND 4 SIMILAR)
SCALE 1" = 1'-0"

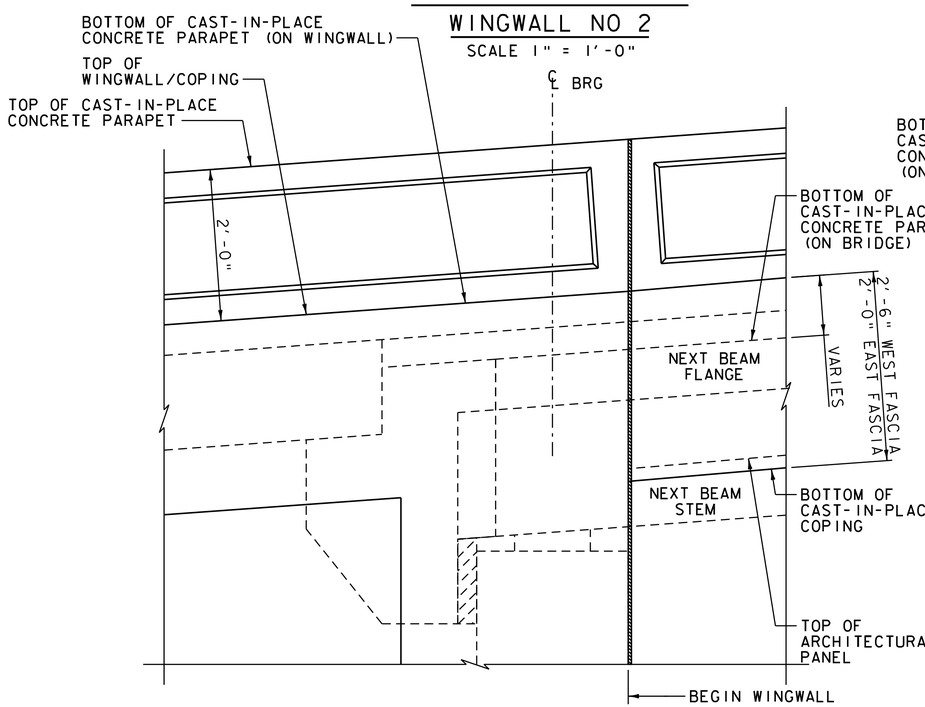

VIEW A-A
(STEEL HAND RAIL NOT SHOWN FOR CLARITY)
SCALE 1" = 1'-0"

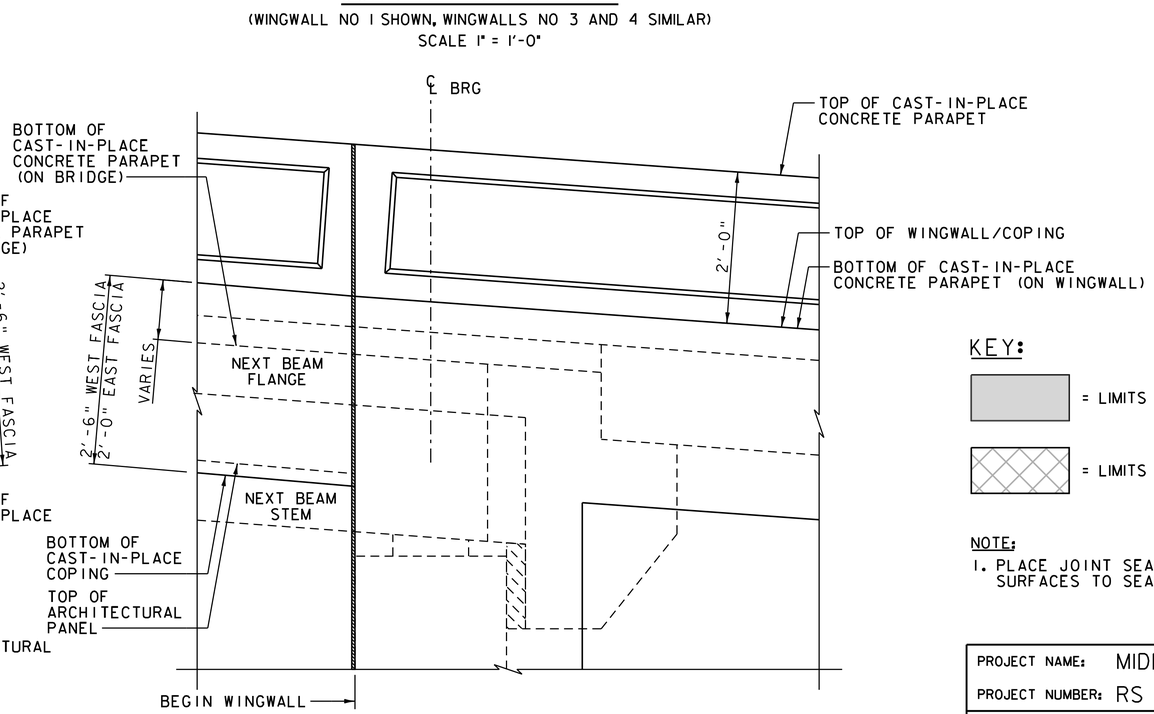

VIEW B-B
(STEEL HAND RAIL NOT SHOWN FOR CLARITY)
SCALE 1" = 1'-0"

KEY:

= LIMITS OF PRECAST CURTAIN WALL

= LIMITS OF CAST-IN-PLACE CONCRETE PARAPET

NOTE:

1. PLACE JOINT SEALANT ON HORIZONTAL AND VERTICAL SURFACES TO SEAL JOINT FROM WATER.

Vanasse Hangen Brustlin, Inc.

PROJECT NAME: MIDDLEBURY	
PROJECT NUMBER: RS 0174(8)	
FILE NAME: z78f217sub.dgn	PLOT DATE: 8/27/2013
PROJECT LEADER: M.A. COLGAN	DRAWN BY: K.D. WENTWORTH
DESIGNED BY: K.G. KRETSCH	CHECKED BY: G.S. GOODRICH
CORNER DETAILS	SHEET 58 OF 104

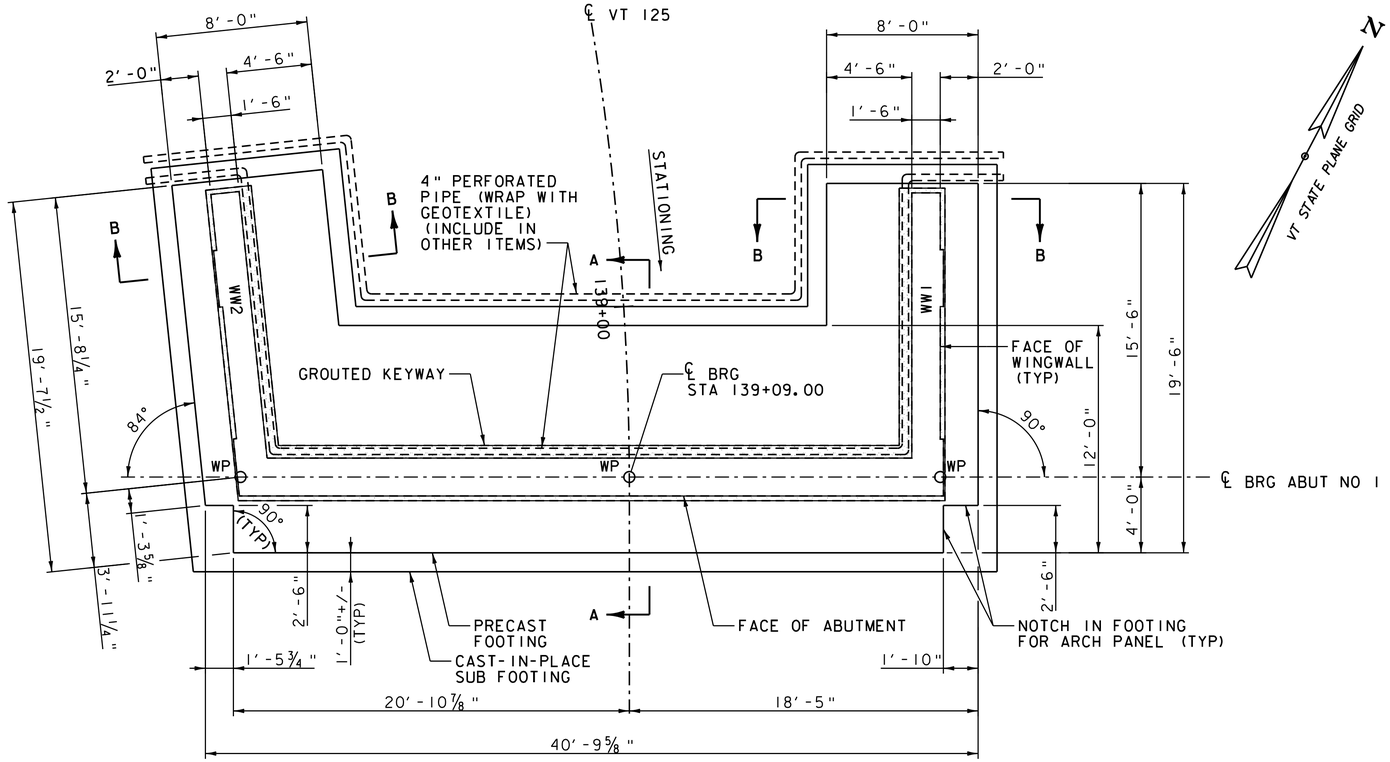

ABUTMENT NO 1 FOOTING MASONRY PLAN

SCALE 1/4" = 1'-0"

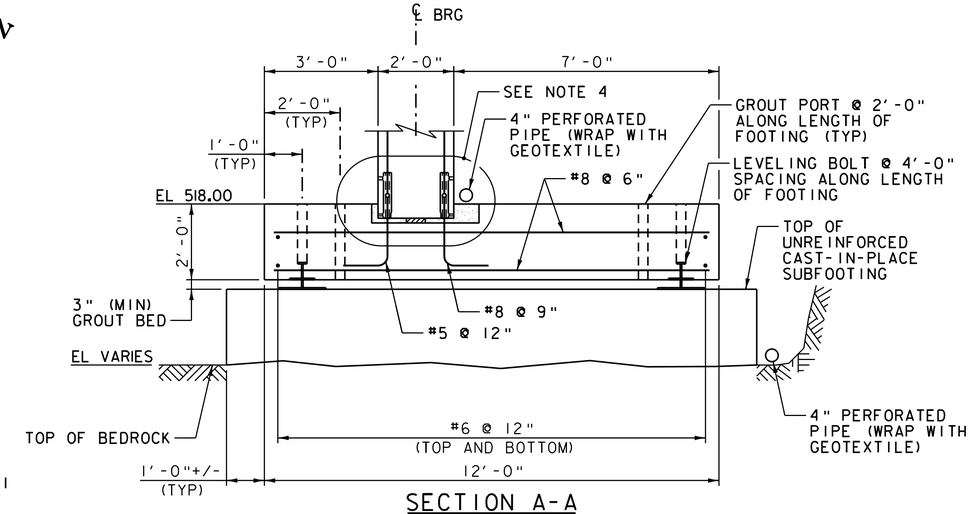

SECTION A-A

SCALE 1/2" = 1'-0"

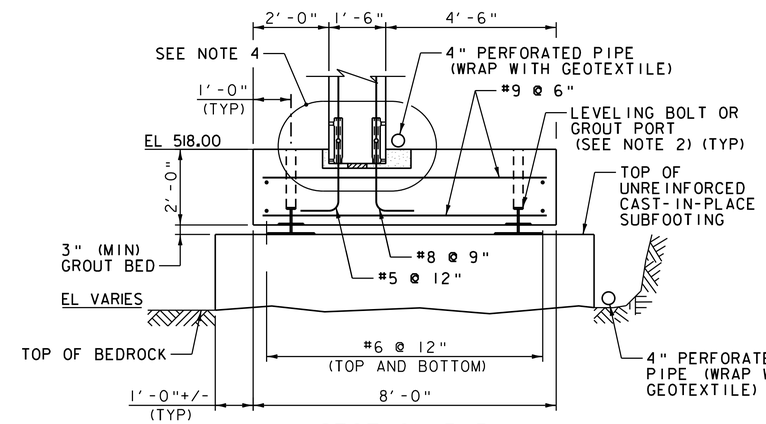

SECTION B-B

SCALE 1/2" = 1'-0"

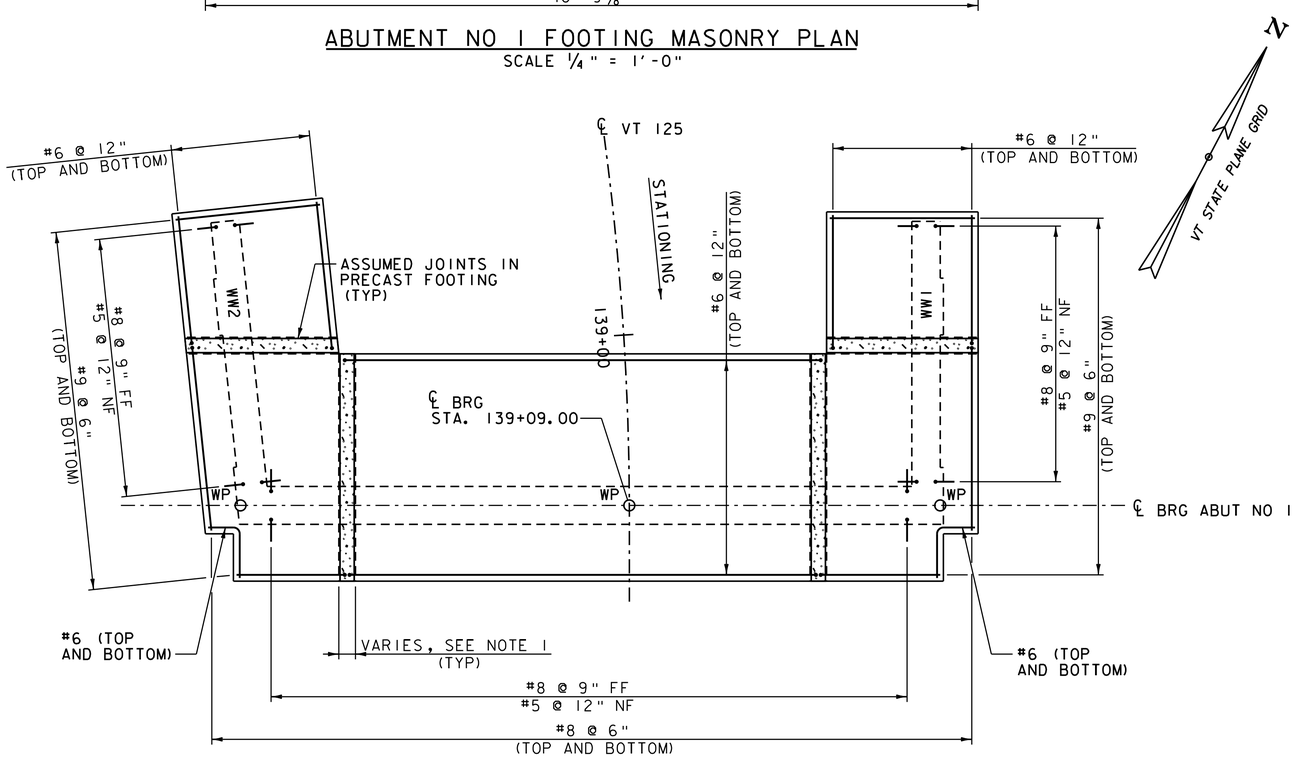

ABUTMENT NO 1 FOOTING REINFORCING PLAN

SCALE 1/4" = 1'-0"

NOTES:

1. LENGTH OF PRECAST FOOTING SECTIONS AND LENGTHS OF CAST-IN-PLACE SECTIONS TO BE BASED ON SHIPPING WEIGHT AND SIZE REQUIREMENTS. THE PRECAST SECTIONS SHALL BE ADEQUATE TO SUPPORT THE DEAD WEIGHT OF THE ABUTMENTS. THE CAST-IN-PLACE SECTIONS CAN BE COMPLETED TO SUPPORT THE TOTAL WEIGHT OF STRUCTURE AND LIVE LOAD.
2. PLACE GROUT PORTS AT 2'-0" ALONG LENGTH OF FOOTING BETWEEN LEVELING BOLTS SPACED AT 4'-0" ALONG LENGTH OF FOOTING.
3. IF A LEVEL SURFACE OF COMPETENT BEDROCK, A MINIMUM OF 3 INCHES AND A MAXIMUM OF 6 INCHES BELOW BOTTOM OF PRECAST FOOTING, CAN BE PREPARED AND APPROVED BY THE VTRANS GEOLOGIST, A CAST-IN-PLACE UNREINFORCED CONCRETE SUBFOOTING IS NOT REQUIRED. IN THIS CASE, A THREE INCH MINIMUM GROUT BED SHALL BE PLACED BETWEEN THE PRECAST FOOTING AND THE COMPETENT BEDROCK SURFACE.
4. SEE STEM TO FOOTING CONNECTION DETAIL ON ABUTMENT NO 1 PLAN AND ELEVATION SHEET.
5. SEE ABUTMENT NO 2 FOOTING SHEET FOR CAST-IN-PLACE FOOTING CLOSURE DETAIL.

NOTE:

NF = NEAR FACE
FF = FAR FACE
EF = EACH FACE
▲ = CUT TO FIT IN FIELD
3" CLEAR, UNLESS OTHERWISE SPECIFIED ON THE PLANS.
2'-2" BAR LAP UNLESS OTHERWISE SPECIFIED ON THE PLANS.

VHB Vanasse Hangen Brustlin, Inc.

PROJECT NAME: MIDDLEBURY	
PROJECT NUMBER: RS 0174(8)	
FILE NAME: z78f217sub.dgn	PLOT DATE: 8/27/2013
PROJECT LEADER: M.A. COLGAN	DRAWN BY: K.D. WENTWORTH
DESIGNED BY: K.G. KRETSCH	CHECKED BY: G.S. GOODRICH
ABUTMENT NO 1 FOOTING	SHEET 59 OF 104

VHB 57438

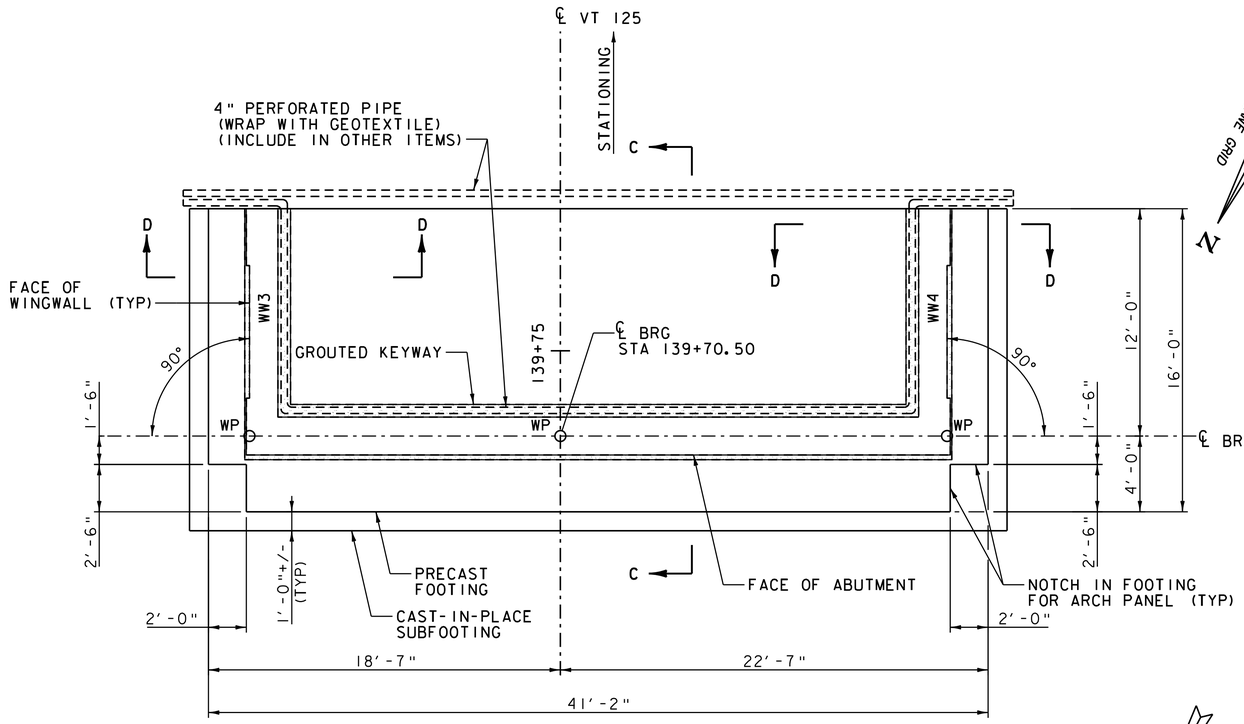

ABUTMENT NO 2 MASONRY FOOTING PLAN

SCALE 1/4" = 1'-0"

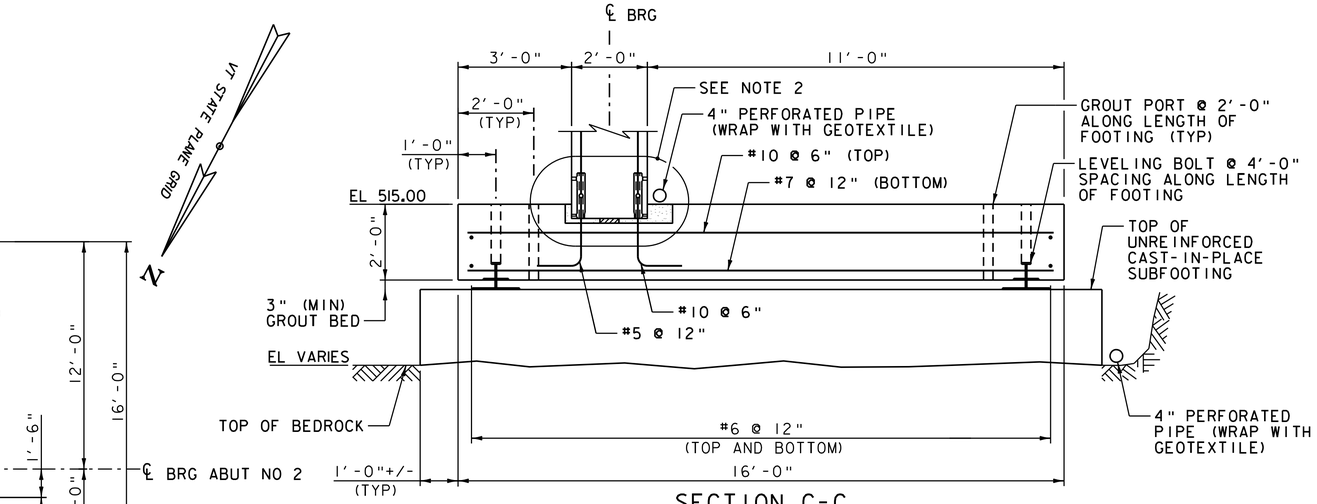

SECTION C-C

SCALE 1/2" = 1'-0"

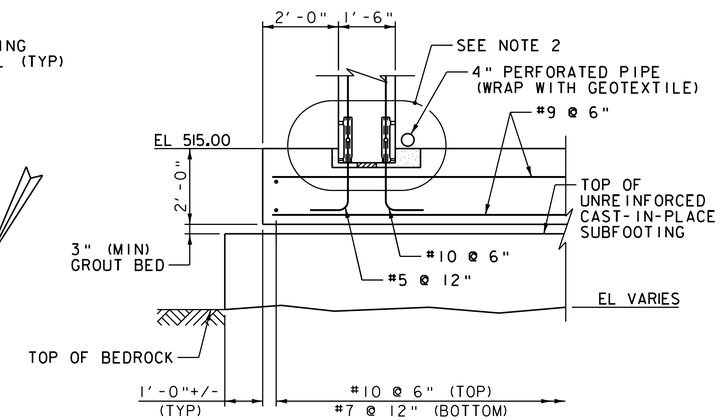

SECTION D-D

(SEE SECTION C-C FOR GROUT PORT AND LEVELING BOLT LOCATIONS)

SCALE 1/2" = 1'-0"

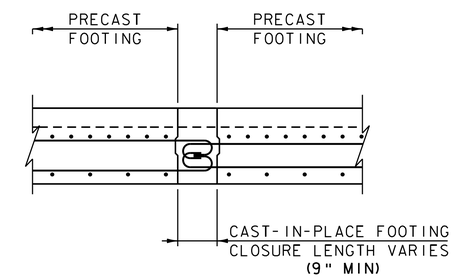

PRECAST FOOTING CLOSURE POUR DETAIL

NOT TO SCALE

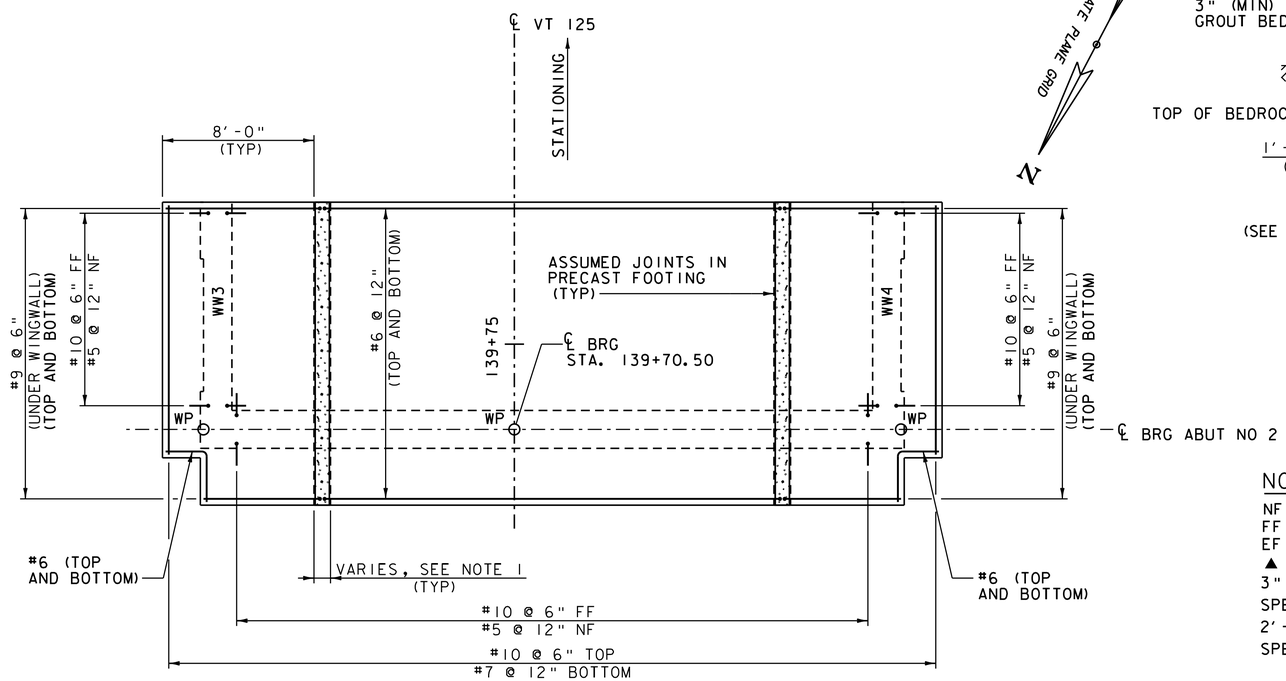

ABUTMENT NO 2 FOOTING REINFORCING PLAN

SCALE 1/4" = 1'-0"

NOTES:

1. LENGTH OF PRECAST FOOTING SECTIONS AND LENGTHS OF CAST-IN-PLACE SECTIONS TO BE BASED ON SHIPPING WEIGHT AND SIZE REQUIREMENTS. THE PRECAST SECTIONS SHALL BE ADEQUATE TO SUPPORT THE DEAD WEIGHT OF THE ABUTMENTS. THE CAST-IN-PLACE SECTIONS CAN BE COMPLETED TO SUPPORT THE TOTAL WEIGHT OF STRUCTURE AND LIVE LOAD.
2. SEE STEM TO FOOTING CONNECTION DETAIL ON ABUTMENT NO 1 PLAN AND ELEVATION SHEET.
3. IF A LEVEL SURFACE OF COMPETENT BEDROCK, A MINIMUM OF 3 INCHES AND A MAXIMUM OF 6 INCHES BELOW BOTTOM OF PRECAST FOOTING, CAN BE PREPARED AND APPROVED BY THE VTRANS GEOLOGIST, A CAST-IN-PLACE UNREINFORCED CONCRETE SUBFOOTING IS NOT REQUIRED. IN THIS CASE, A THREE INCH MINIMUM GROUT BED SHALL BE PLACED BETWEEN THE PRECAST FOOTING AND THE COMPETENT BEDROCK SURFACE.

NOTE:

NF = NEAR FACE
FF = FAR FACE
EF = EACH FACE
▲ = CUT TO FIT IN FIELD
3" CLEAR, UNLESS OTHERWISE SPECIFIED ON THE PLANS.
2'-2" BAR LAP UNLESS OTHERWISE SPECIFIED ON THE PLANS.

VHB Vanasse Hangen Brustlin, Inc.

PROJECT NAME: MIDDLEBURY	
PROJECT NUMBER: RS 0174(8)	
FILE NAME: z78f217sub.dgn	PLOT DATE: 8/27/2013
PROJECT LEADER: M.A. COLGAN	DRAWN BY: K.D. WENTWORTH
DESIGNED BY: K.G. KRETSCH	CHECKED BY: G.S. GOODRICH
ABUTMENT NO 2 FOOTING	SHEET 60 OF 104

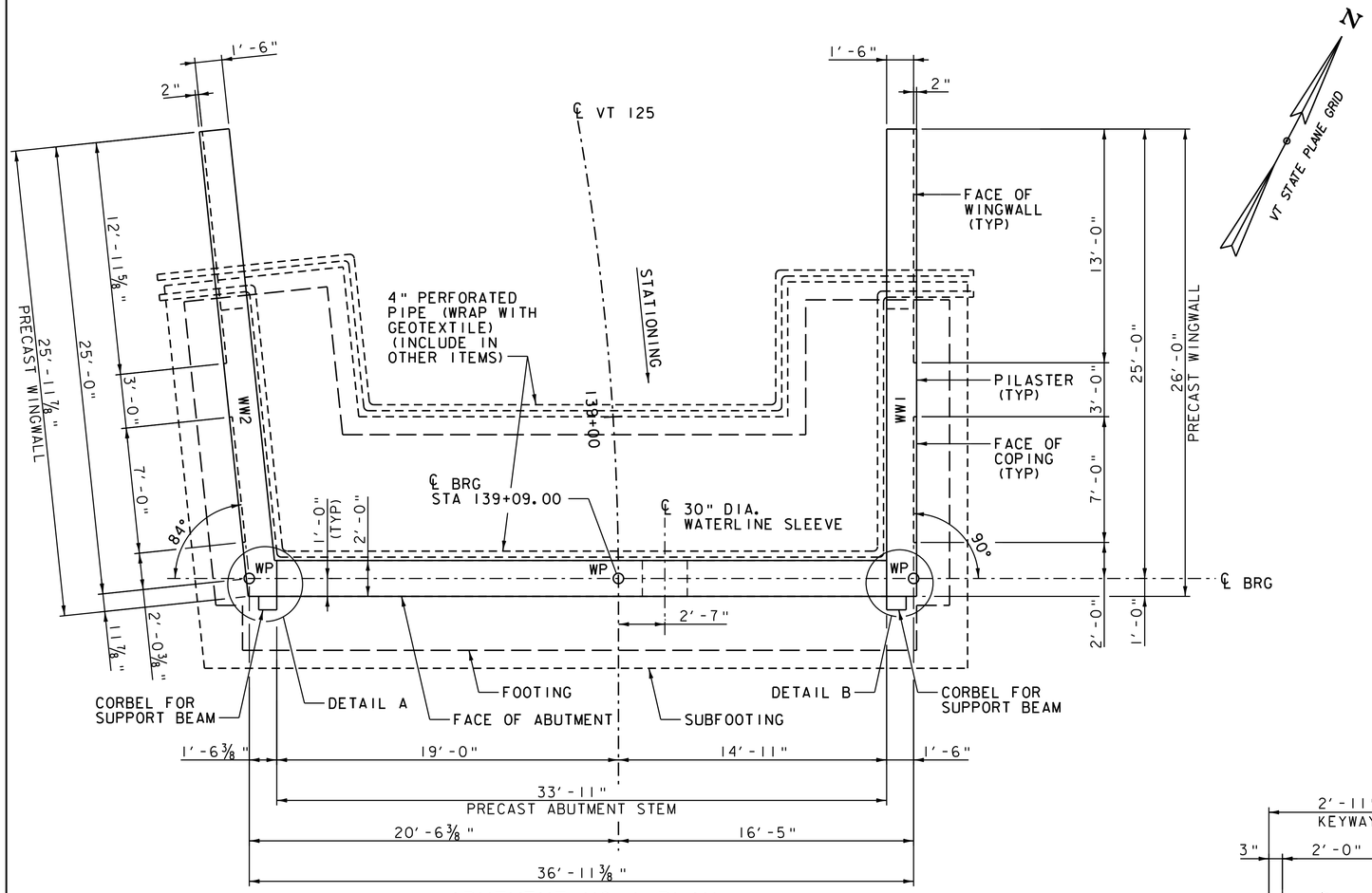

ABUTMENT NO 1 PLAN

SCALE 1/4" = 1'-0"

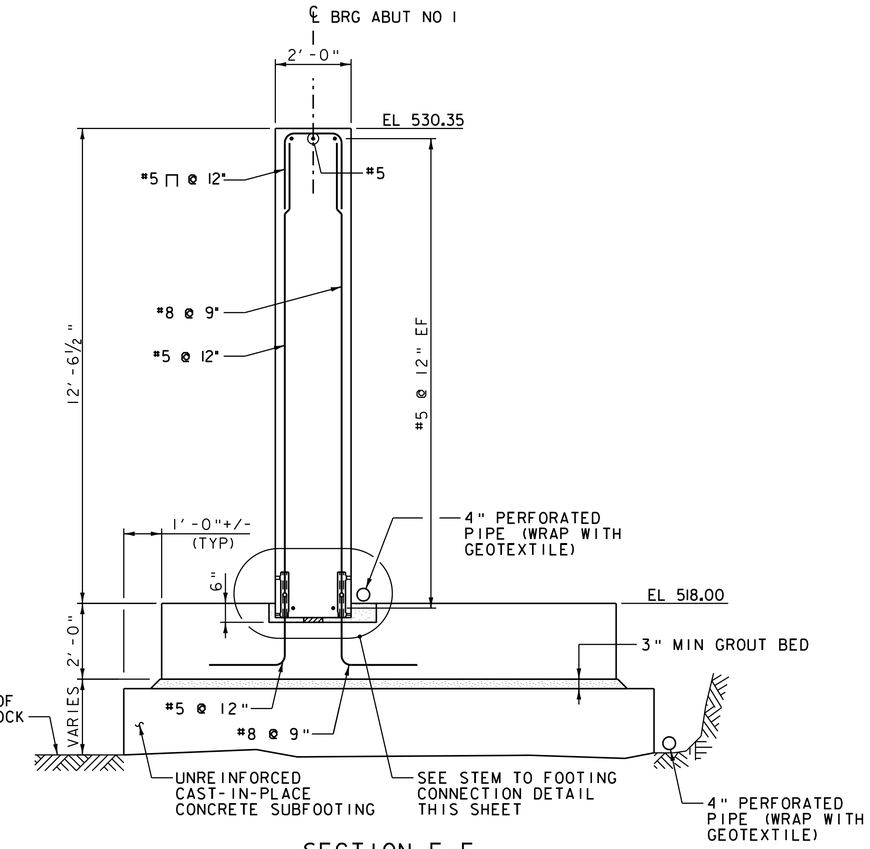

SECTION E-E

SCALE 1/2" = 1'-0"

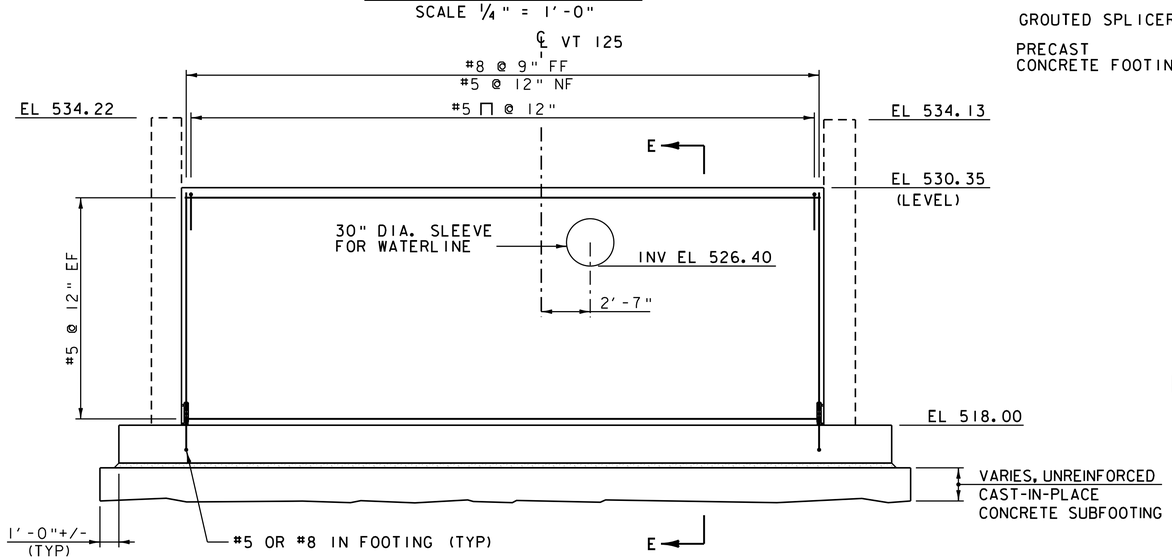

ABUTMENT NO 1 ELEVATION

SCALE 1/4" = 1'-0"

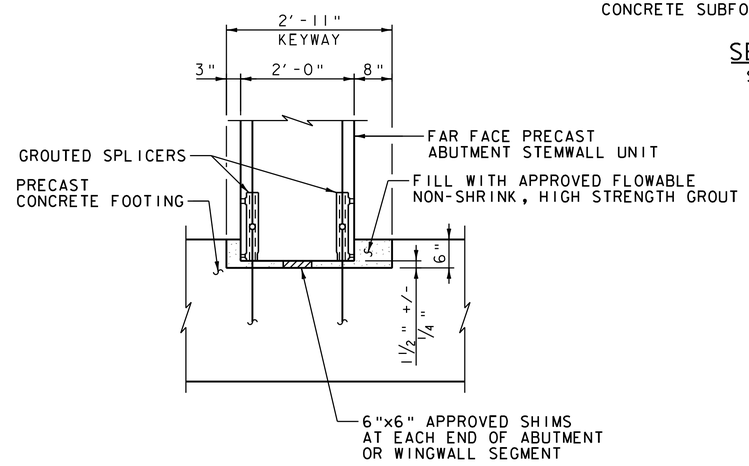

ABUTMENT STEM TO FOOTING CONNECTION

SCALE 3/4" = 1'-0"

NOTE:

NF = NEAR FACE
FF = FAR FACE
EF = EACH FACE
▲ = CUT TO FIT IN FIELD
3" CLEAR, UNLESS OTHERWISE SPECIFIED ON THE PLANS.
2'-2" BAR LAP UNLESS OTHERWISE SPECIFIED ON THE PLANS.

NOTES:

1. SEE WINGWALL DETAILS SHEET FOR DETAIL A AND DETAIL B.
2. SEE ABUTMENT NO 2 PLAN AND ELEVATION SHEET FOR ABUTMENT STEM VERTICAL JOINT DETAILS.
3. SEE FOOTING SHEETS FOR FOOTING AND SUBFOOTING DETAILS.

Vanasse Hangen Brustlin, Inc.

PROJECT NAME: MIDDLEBURY	
PROJECT NUMBER: RS 0174(8)	
FILE NAME: z78f217sub.dgn	PLOT DATE: 8/27/2013
PROJECT LEADER: M.A. COLGAN	DRAWN BY: K.D. WENTWORTH
DESIGNED BY: K.G. KRETSCH	CHECKED BY: G.S. GOODRICH
ABUTMENT NO 1 PLAN AND ELEVATION	SHEET 61 OF 104

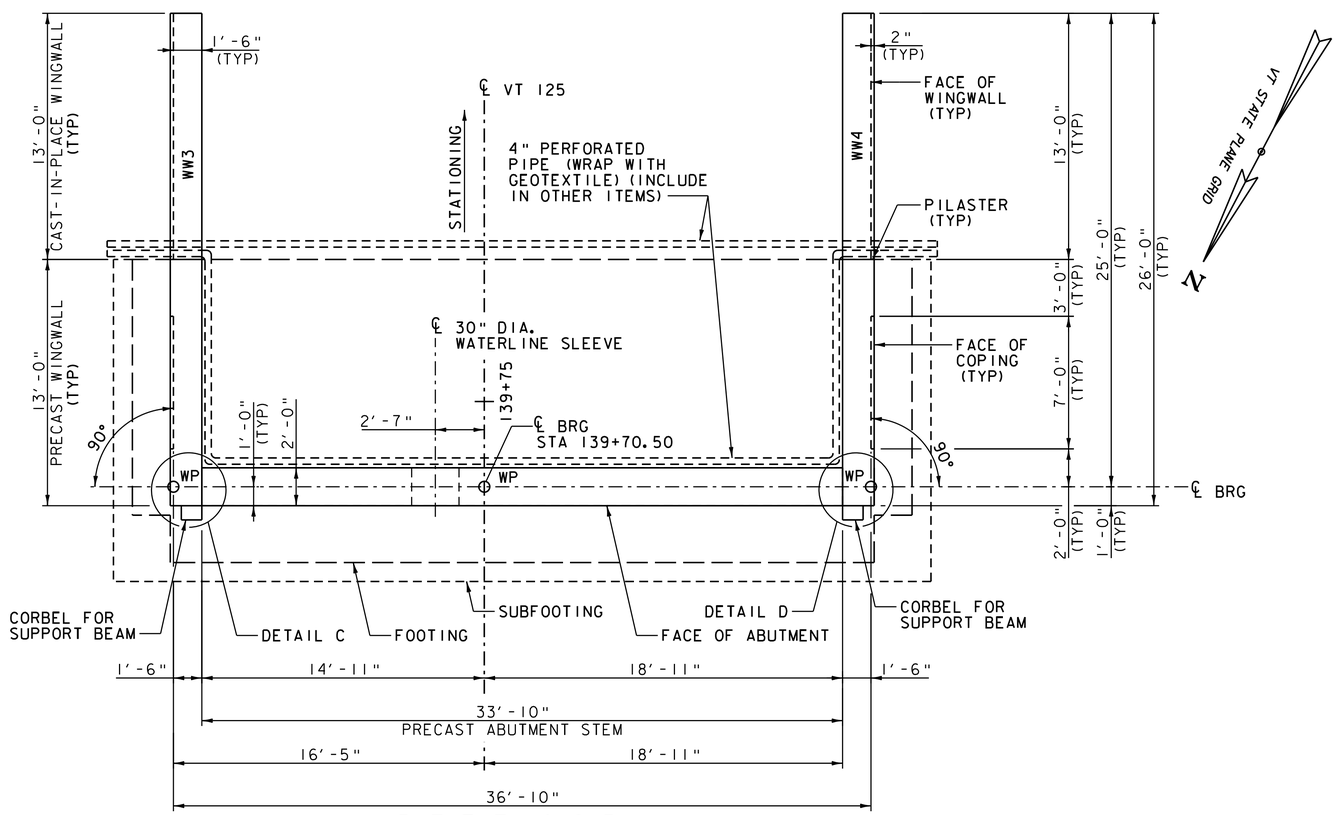

ABUTMENT NO 2 PLAN

SCALE 1/4" = 1'-0"

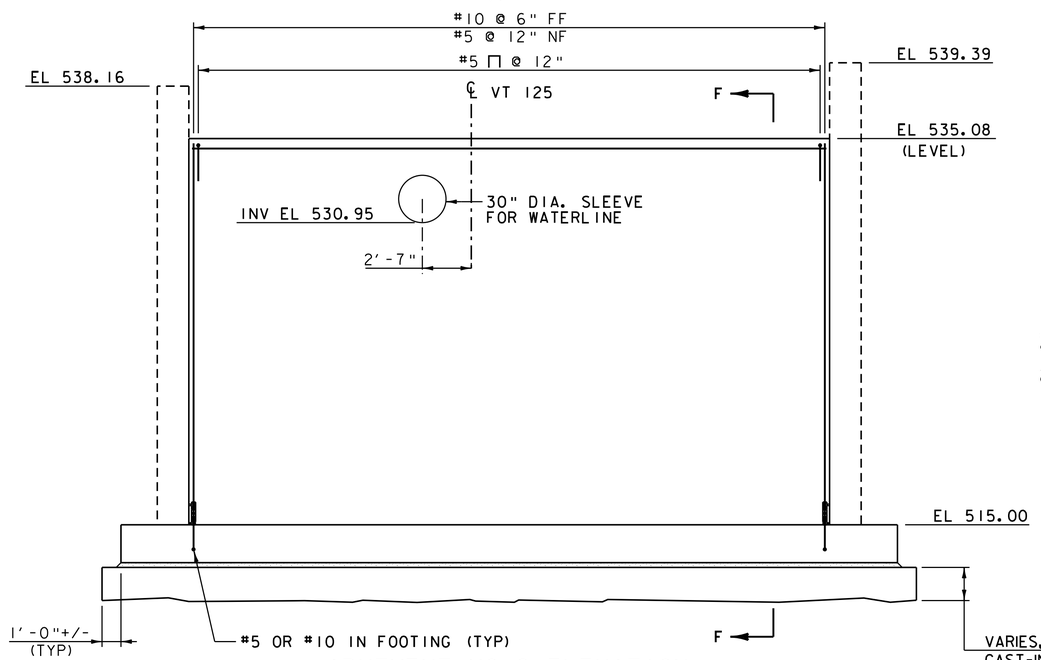

ABUTMENT NO 2 ELEVATION

SCALE 1/4" = 1'-0"

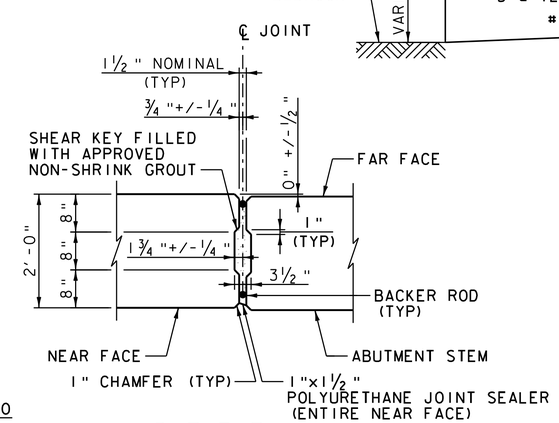

ABUTMENT STEM VERTICAL JOINT

SCALE 3/4" = 1'-0"

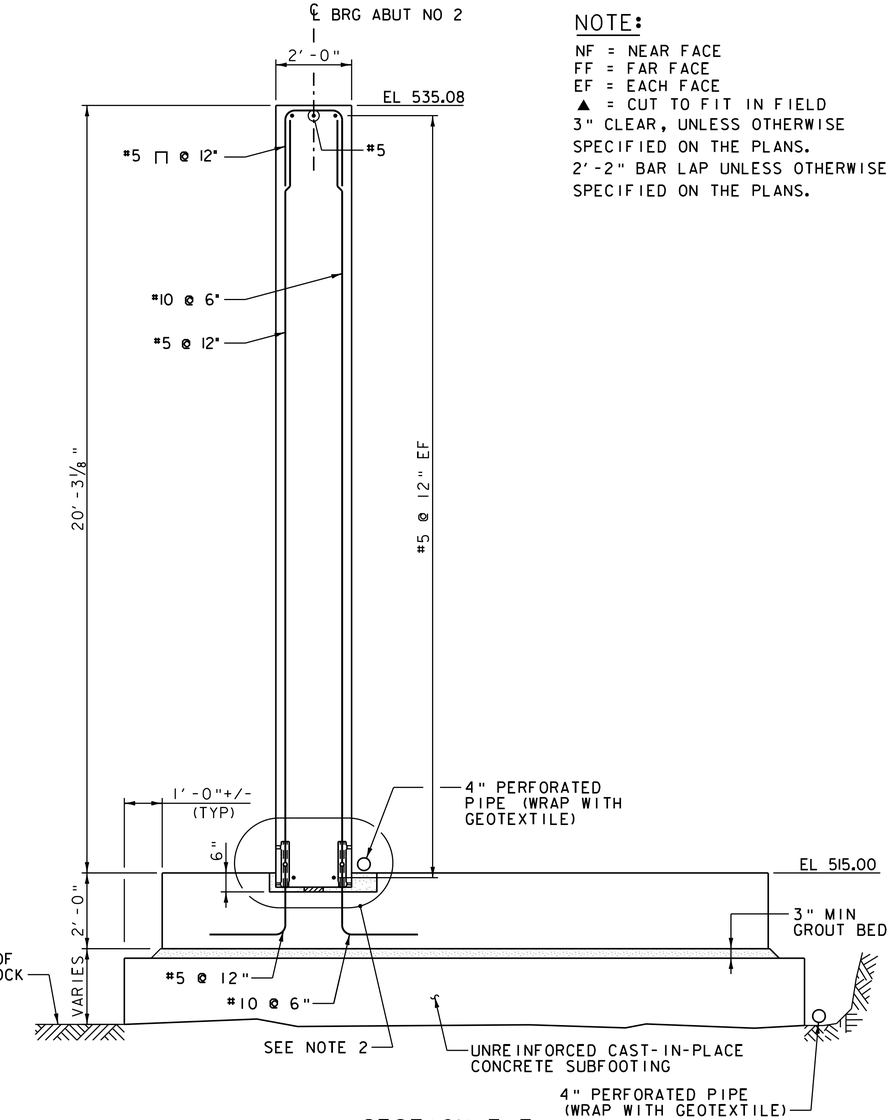

SECTION F-F

SCALE 1/2" = 1'-0"

NOTE:

NF = NEAR FACE
FF = FAR FACE
EF = EACH FACE
▲ = CUT TO FIT IN FIELD
3" CLEAR, UNLESS OTHERWISE SPECIFIED ON THE PLANS.
2'-2" BAR LAP UNLESS OTHERWISE SPECIFIED ON THE PLANS.

NOTES:

1. SEE WINGWALL DETAILS SHEET FOR DETAIL C AND DETAIL D.
2. SEE ABUTMENT STEM TO FOOTING CONNECTION DETAILS ON ABUTMENT NO 1 PLAN AND ELEVATION.
3. SEE FOOTING SHEETS FOR FOOTING AND SUBFOOTING DETAILS.

VHB Vanasse Hangen Brustlin, Inc.

PROJECT NAME: MIDDLEBURY	
PROJECT NUMBER: RS 0174(8)	
FILE NAME: z78f217sub.dgn	PLOT DATE: 8/27/2013
PROJECT LEADER: M.A. COLGAN	DRAWN BY: K.D. WENTWORTH
DESIGNED BY: K.G. KRETSCH	CHECKED BY: G.S. GOODRICH
ABUTMENT NO 2 PLAN AND ELEVATION	SHEET 62 OF 104

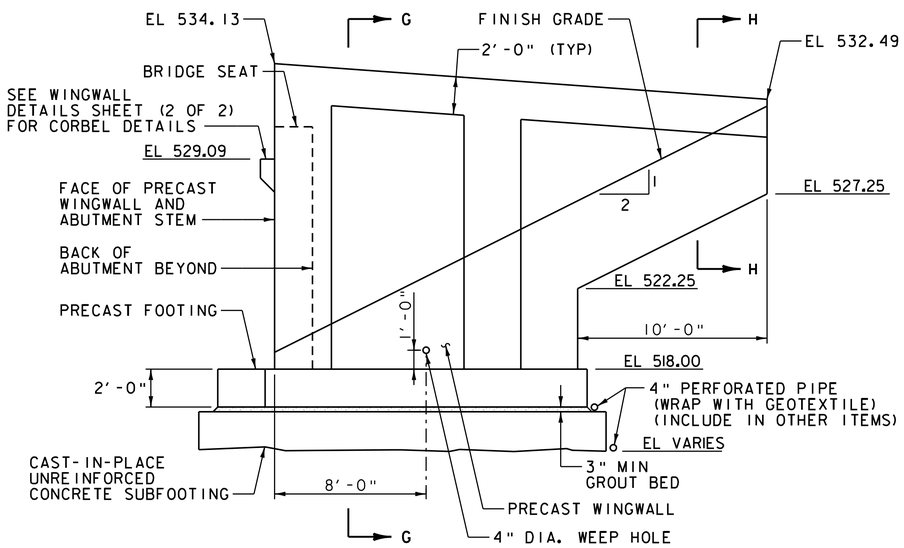

WINGWALL NO 1
MASONRY ELEVATION
(CONCRETE PARAPET NOT SHOWN)
SCALE 1/4" = 1'-0"

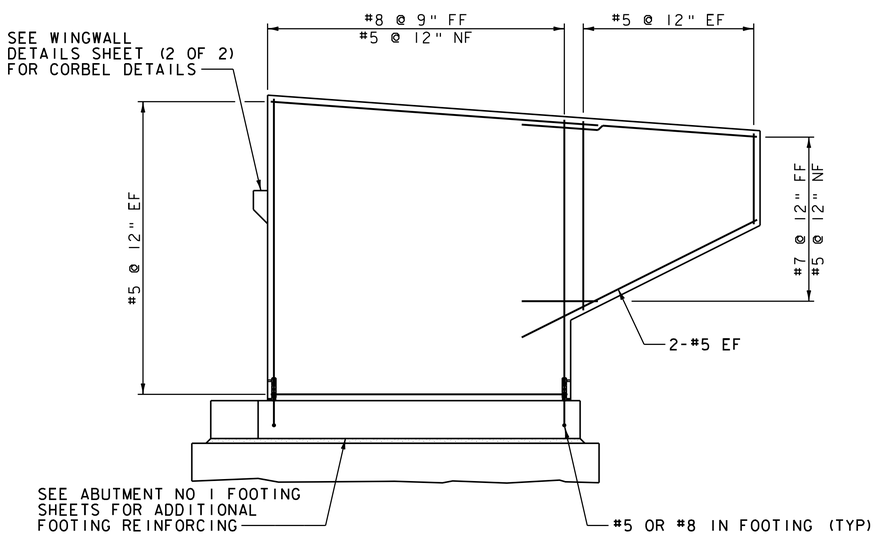

WINGWALL NO 1
REINFORCING ELEVATION
(CONCRETE PARAPET NOT SHOWN)
SCALE 1/4" = 1'-0"

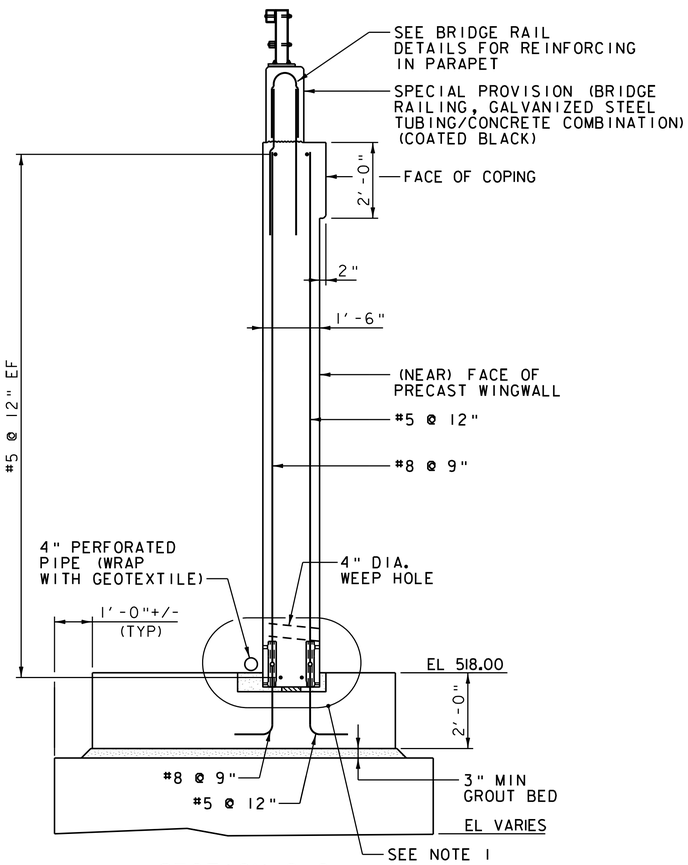

SECTION G-G
SCALE 1/2" = 1'-0"

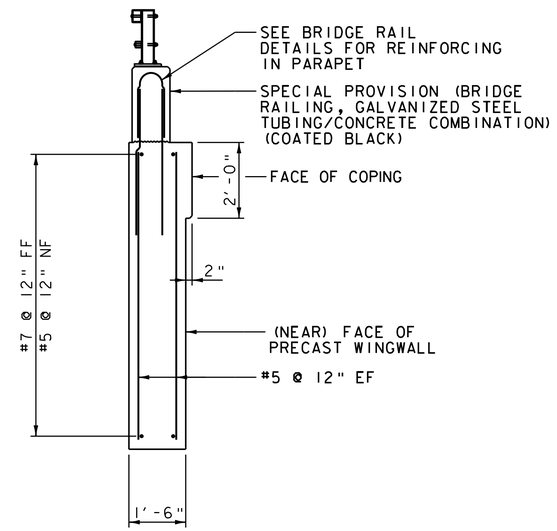

SECTION H-H
SCALE 1/2" = 1'-0"

NOTE:

NF = NEAR FACE
FF = FAR FACE
EF = EACH FACE
▲ = CUT TO FIT IN FIELD
3" CLEAR, UNLESS OTHERWISE SPECIFIED ON THE PLANS.
2'-2" BAR LAP UNLESS OTHERWISE SPECIFIED ON THE PLANS.

NOTES:

1. SEE WINGWALL DETAILS SHEET (2 OF 2) FOR WINGWALL STEM TO FOOTING CONNECTION DETAIL.
2. SEE WINGWALL DETAILS SHEET (2 OF 2) FOR WINGWALL STEM VERTICAL JOINT.

Vanasse Hangen Brustlin, Inc.

PROJECT NAME: MIDDLEBURY	
PROJECT NUMBER: RS 0174(8)	
FILE NAME: z78f217sub.dgn	PLOT DATE: 8/27/2013
PROJECT LEADER: M.A. COLGAN	DRAWN BY: K.D. WENTWORTH
DESIGNED BY: K.G. KRETSCH	CHECKED BY: G.S. GOODRICH
WINGWALL NO 1	SHEET 63 OF 104

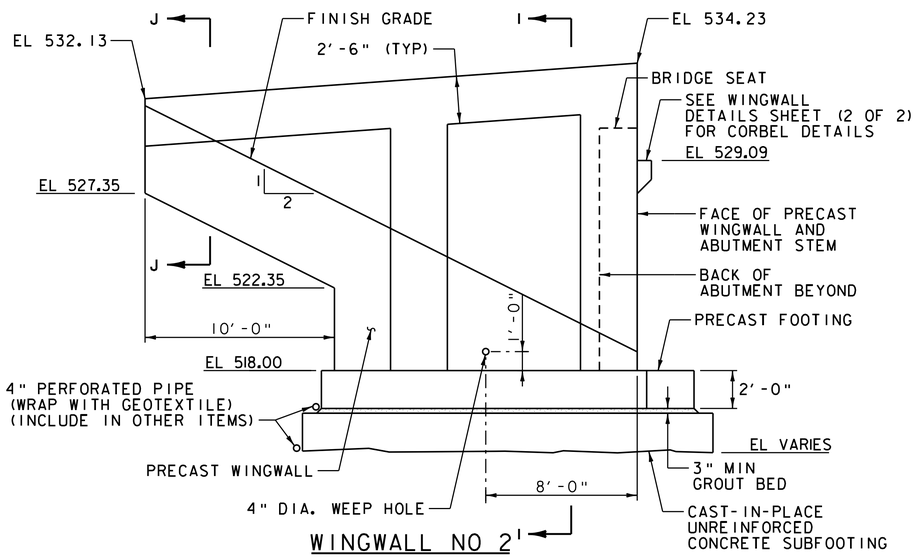

WINGWALL NO 2

MASONRY ELEVATION

(CONCRETE PARAPET NOT SHOWN)

SCALE 1/4" 1'-0"

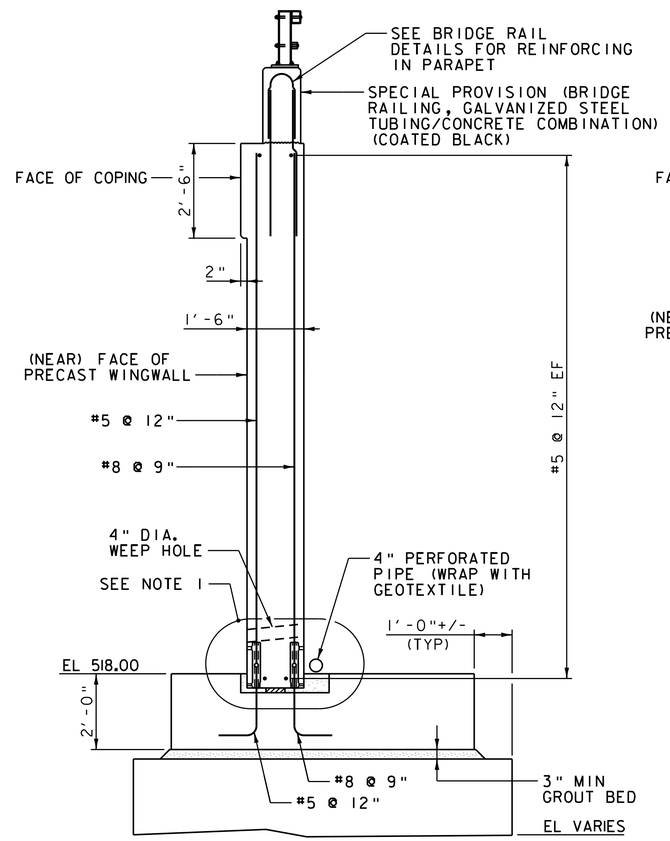

SECTION I-I

SCALE 1/2" = 1'-0"

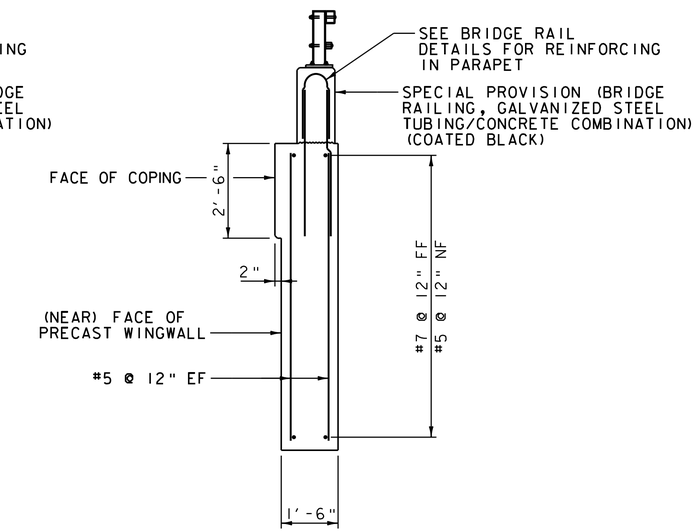

SECTION J-J

SCALE 1/2" = 1'-0"

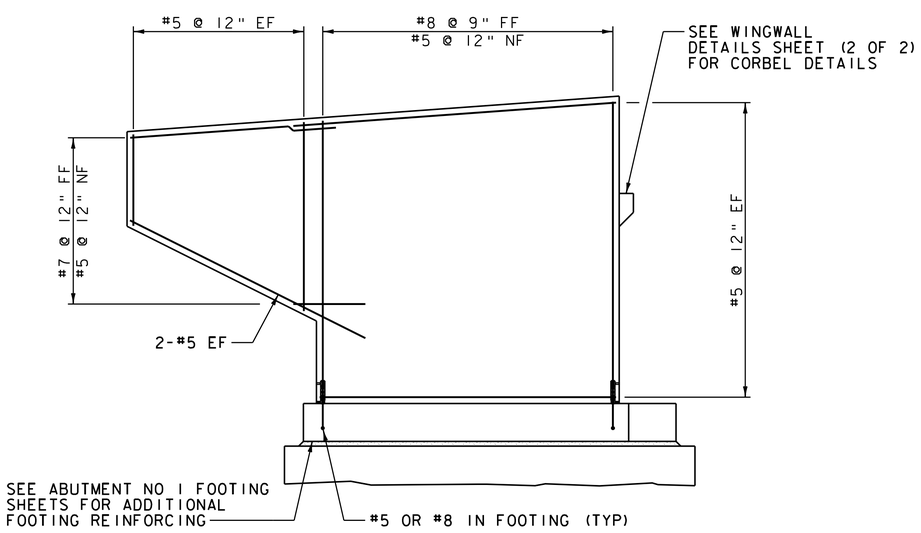

WINGWALL NO 2

REINFORCING ELEVATION

(CONCRETE PARAPET NOT SHOWN)

SCALE 1/4" 1'-0"

NOTE:

NF = NEAR FACE
FF = FAR FACE
EF = EACH FACE
▲ = CUT TO FIT IN FIELD
3" CLEAR, UNLESS OTHERWISE SPECIFIED ON THE PLANS.
2'-2" BAR LAP UNLESS OTHERWISE SPECIFIED ON THE PLANS.

NOTES:

1. SEE WINGWALL DETAILS SHEET (2 OF 2) FOR WINGWALL STEM TO FOOTING CONNECTION DETAIL.
2. SEE WINGWALL DETAILS SHEET (2 OF 2) FOR WINGWALL STEM VERTICAL JOINT.

VHB Vanasse Hangen Brustlin, Inc.

PROJECT NAME: MIDDLEBURY	
PROJECT NUMBER: RS 0174(8)	
FILE NAME: z78f217sub.dgn	PLOT DATE: 8/27/2013
PROJECT LEADER: M.A. COLGAN	DRAWN BY: K.D. WENTWORTH
DESIGNED BY: K.G. KRETSCH	CHECKED BY: G.S. GOODRICH
WINGWALL NO 2	SHEET 64 OF 104

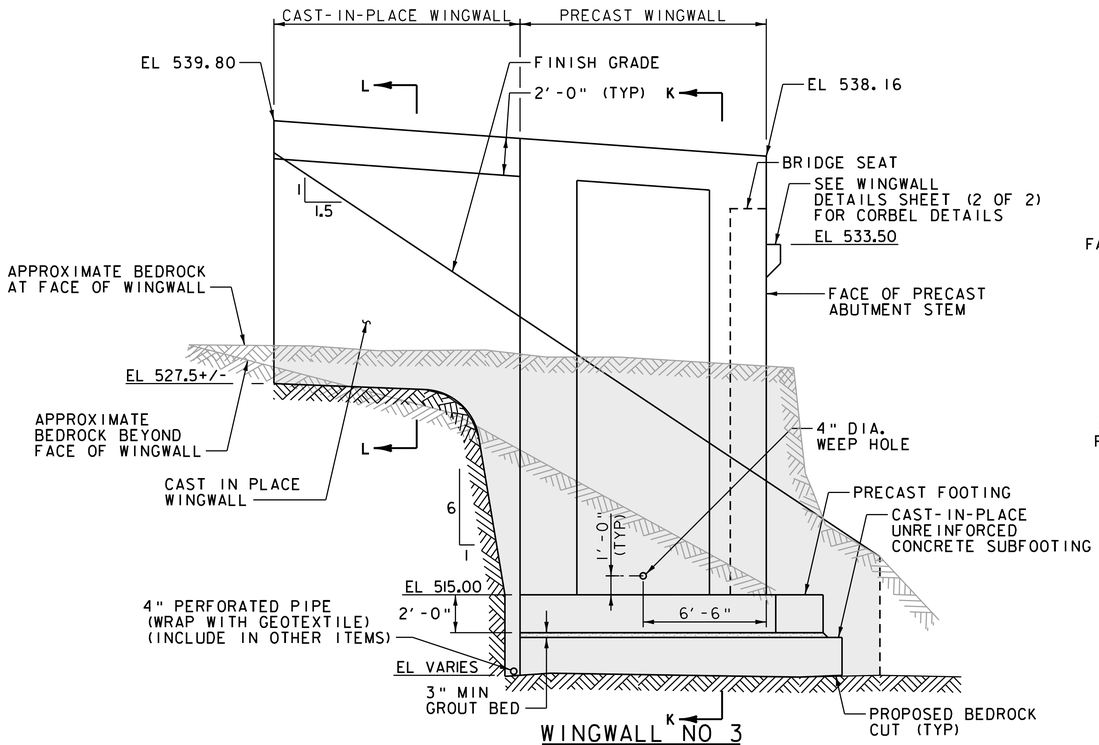

WINGWALL NO 3

MASONRY ELEVATION

(CONCRETE PARAPET NOT SHOWN)

SCALE 1/4" = 1'-0"

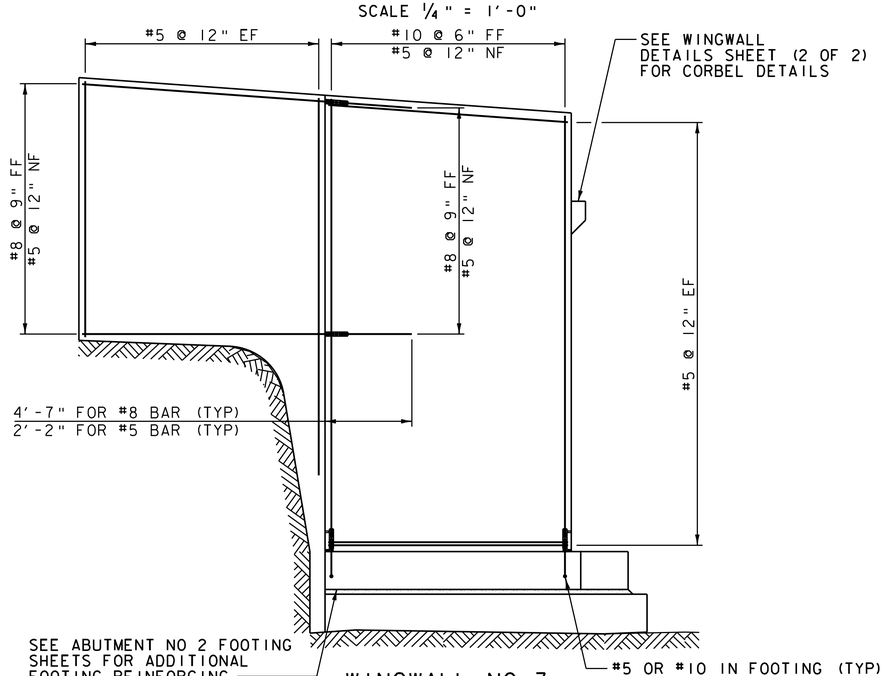

WINGWALL NO 3

REINFORCING ELEVATION

(CONCRETE PARAPET NOT SHOWN)

SCALE 1/4" = 1'-0"

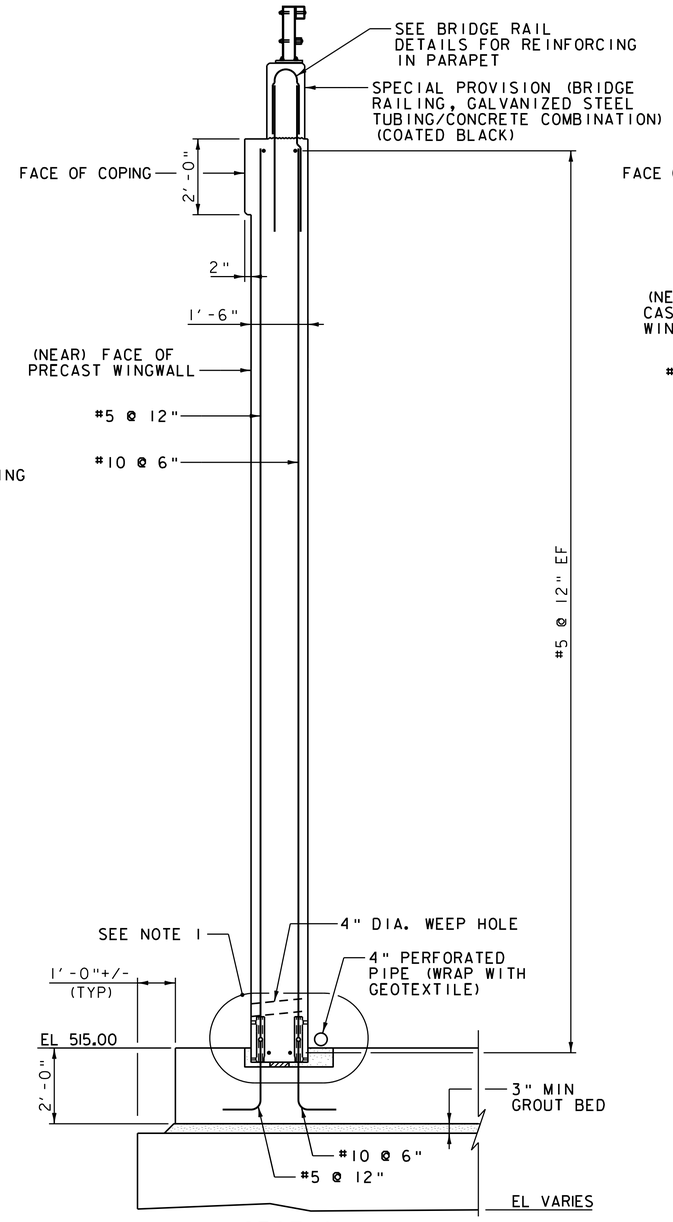

SECTION K-K

SCALE 1/2" = 1'-0"

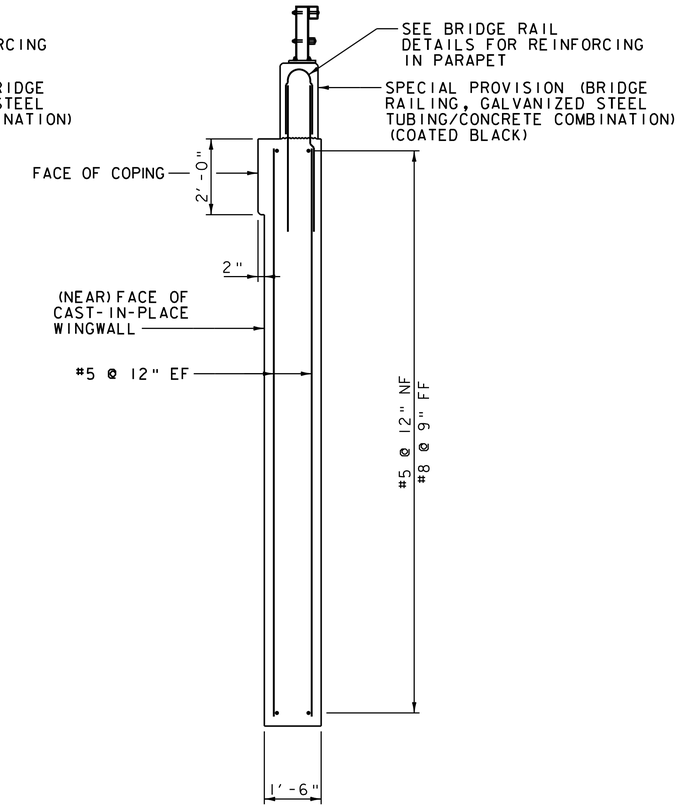

SECTION L-L

SCALE 1/2" = 1'-0"

NOTE:

NF = NEAR FACE
FF = FAR FACE
EF = EACH FACE
▲ = CUT TO FIT IN FIELD
3" CLEAR, UNLESS OTHERWISE SPECIFIED ON THE PLANS.
2'-2" BAR LAP UNLESS OTHERWISE SPECIFIED ON THE PLANS.

NOTES:

1. SEE WINGWALL DETAILS SHEET (2 OF 2) FOR WINGWALL STEM TO FOOTING CONNECTION DETAIL.
2. SEE WINGWALL SHEET (2 OF 2) FOR WINGWALL STEM VERTICAL JOINT.

KEY:

= APPROXIMATE BEDROCK REMOVAL LIMITS

VHB Vanasse Hangen Brustlin, Inc.

PROJECT NAME: MIDDLEBURY	
PROJECT NUMBER: RS 0174(8)	
FILE NAME: z78f217sub.dgn	PLOT DATE: 8/27/2013
PROJECT LEADER: M.A. COLGAN	DRAWN BY: K.D. WENTWORTH
DESIGNED BY: K.G. KRETSCH	CHECKED BY: G.S. GOODRICH
WINGWALL NO 3	SHEET 65 OF 104

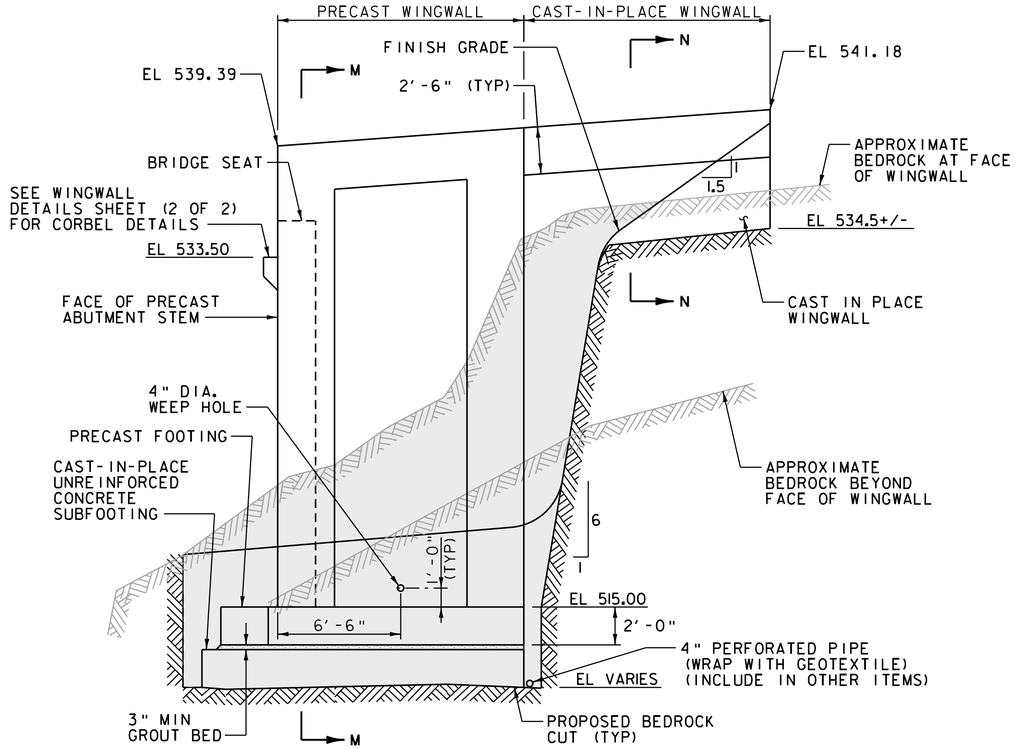

WINGWALL NO 4 MASONRY ELEVATION

(CONCRETE PARAPET NOT SHOWN)

SCALE 1/4" = 1'-0"

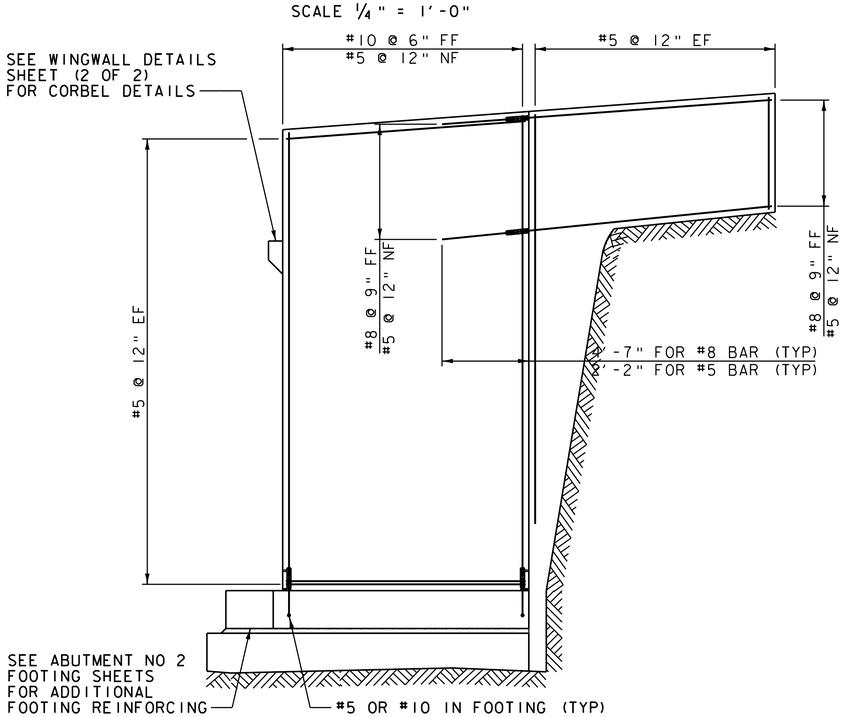

WINGWALL NO 4 REINFORCING ELEVATION

(CONCRETE PARAPET NOT SHOWN)

SCALE 1/4" = 1'-0"

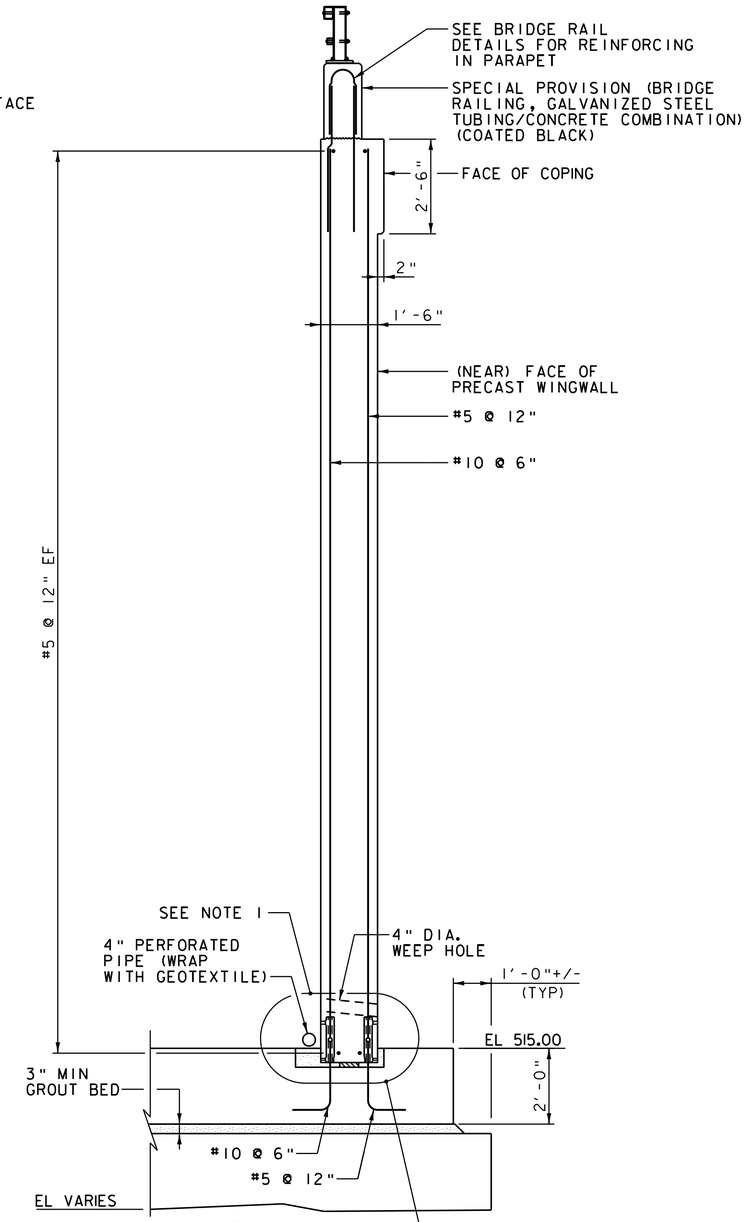

SECTION M-M

SCALE 1/2" = 1'-0"

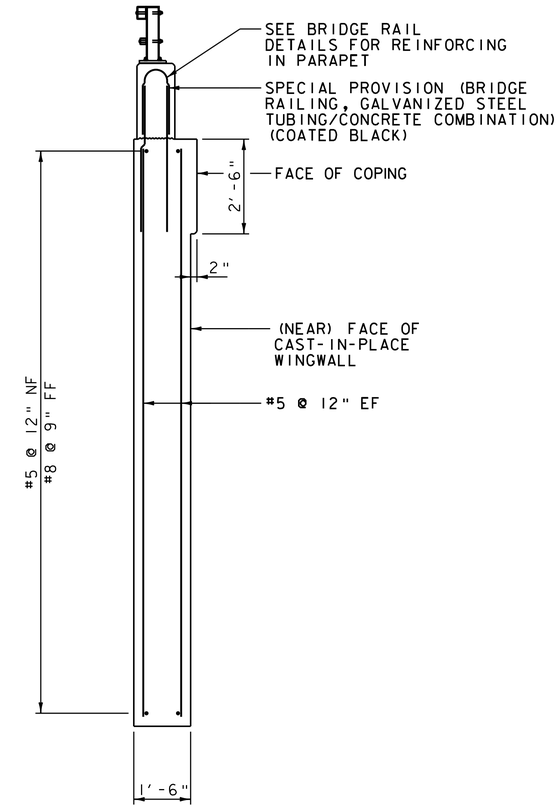

SECTION N-N

SCALE 1/2" = 1'-0"

NOTE:

NF = NEAR FACE
FF = FAR FACE
EF = EACH FACE
▲ = CUT TO FIT IN FIELD
3" CLEAR, UNLESS OTHERWISE SPECIFIED ON THE PLANS.
2'-2" BAR LAP UNLESS OTHERWISE SPECIFIED ON THE PLANS.

NOTES:

1. SEE WINGWALL DETAILS SHEET (2 OF 2) FOR WINGWALL STEM TO FOOTING CONNECTION DETAIL.
2. SEE WINGWALL SHEET (2 OF 2) FOR WINGWALL STEM VERTICAL JOINT.

KEY:

= APPROXIMATE BEDROCK REMOVAL LIMITS

Vanasse Hangen Brustlin, Inc.

PROJECT NAME: MIDDLEBURY	
PROJECT NUMBER: RS 0174(8)	
FILE NAME: z78f217sub.dgn	PLOT DATE: 8/27/2013
PROJECT LEADER: M.A. COLGAN	DRAWN BY: K.D. WENTWORTH
DESIGNED BY: K.G. KRETSCH	CHECKED BY: G.S. GOODRICH
WINGWALL NO 4	SHEET 66 OF 104

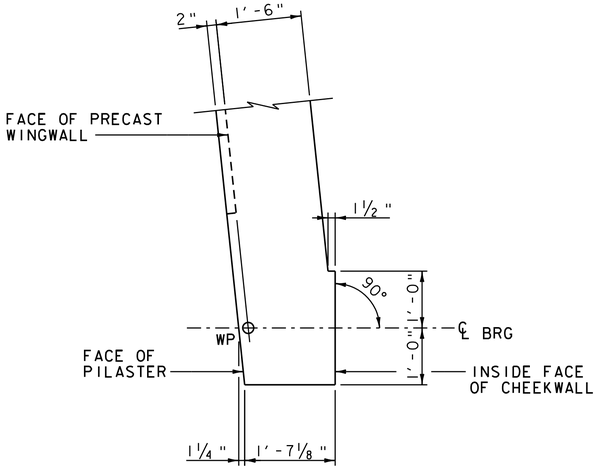

DETAIL A
WINGWALL NO 2 CORNER
DETAIL ABOVE SEAT
SCALE 3/4" = 1'-0"

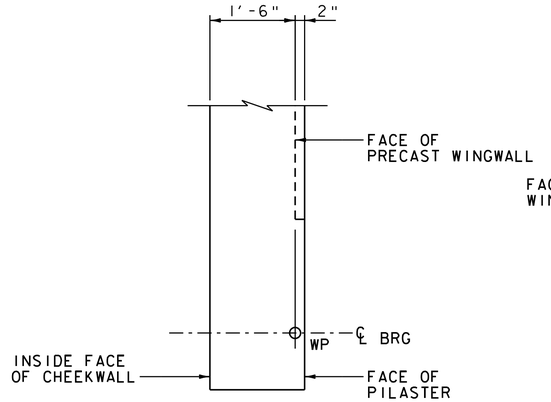

DETAIL B
WINGWALL NO 1 CORNER
DETAIL ABOVE SEAT
SCALE 3/4" = 1'-0"

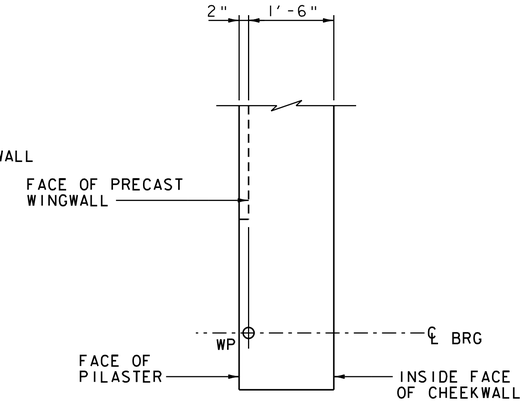

DETAIL C
WINGWALL NO 3 CORNER
DETAIL ABOVE SEAT
SCALE 3/4" = 1'-0"

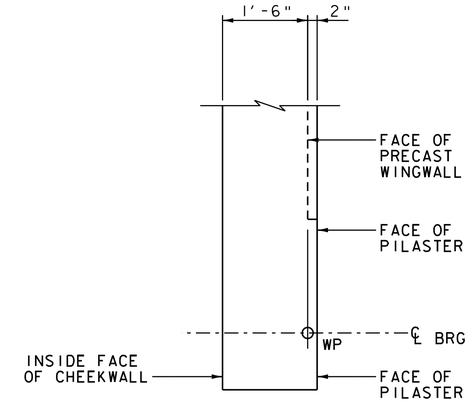

DETAIL D
WINGWALL NO 4 CORNER
DETAIL ABOVE SEAT
SCALE 3/4" = 1'-0"

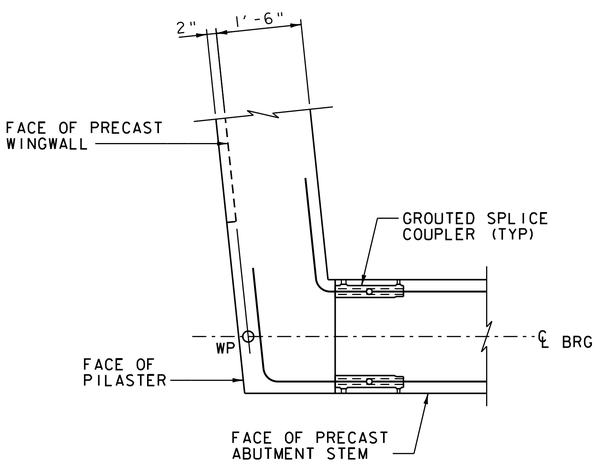

DETAIL A
WINGWALL NO 2 CORNER
DETAIL BELOW SEAT
(CORBEL NOT SHOWN FOR CLARITY)
SCALE 3/4" = 1'-0"

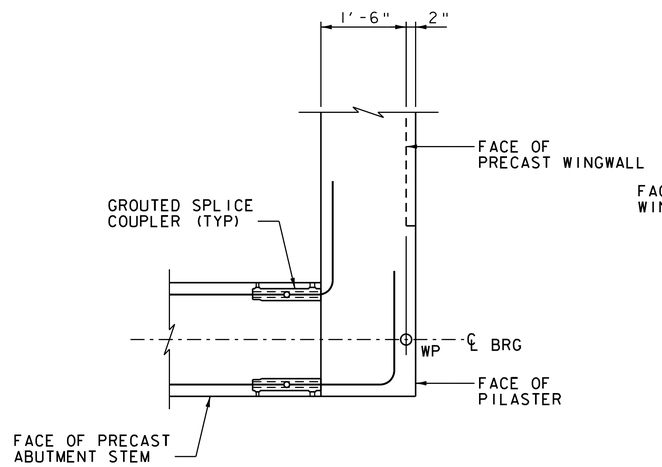

DETAIL B
WINGWALL NO 1 CORNER
DETAIL BELOW SEAT
(CORBEL NOT SHOWN FOR CLARITY)
SCALE 3#4" = 1'-0"

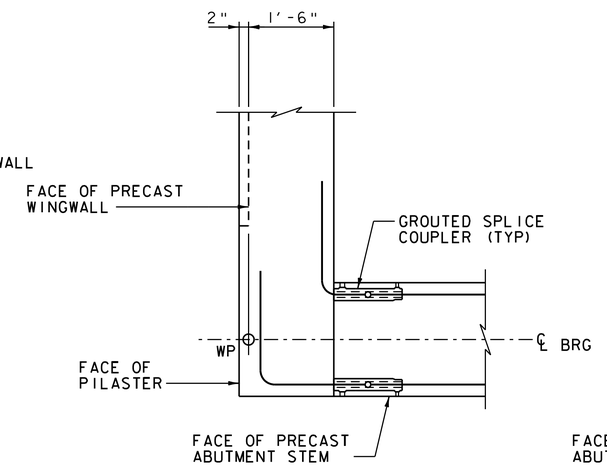

DETAIL C
WINGWALL NO 3 CORNER
DETAIL BELOW SEAT
(CORBEL NOT SHOWN FOR CLARITY)
SCALE 3#4" = 1'-0"

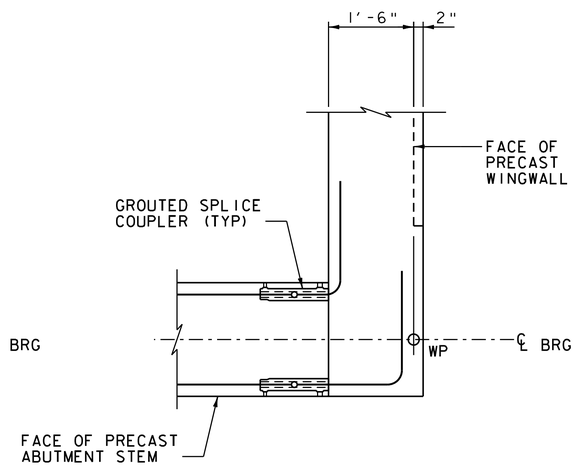

DETAIL D
WINGWALL NO 4 CORNER
DETAIL BELOW SEAT
(CORBEL NOT SHOWN FOR CLARITY)
SCALE 3#4" = 1'-0"

NOTE:

NF = NEAR FACE
FF = FAR FACE
EF = EACH FACE
▲ = CUT TO FIT IN FIELD
3" CLEAR, UNLESS OTHERWISE SPECIFIED ON THE PLANS.
2'-2" BAR LAP UNLESS OTHERWISE SPECIFIED ON THE PLANS.

VHB Vanasse Hangen Brustlin, Inc.

PROJECT NAME: MIDDLEBURY	
PROJECT NUMBER: RS 0174(8)	
FILE NAME: z78f217sub.dgn	PLOT DATE: 8/27/2013
PROJECT LEADER: M.A. COLGAN	DRAWN BY: K.D. WENTWORTH
DESIGNED BY: K.G. KRETSCH	CHECKED BY: G.S. GOODRICH
WINGWALL DETAILS (1 OF 2)	SHEET 67 OF 104

VHB 57438

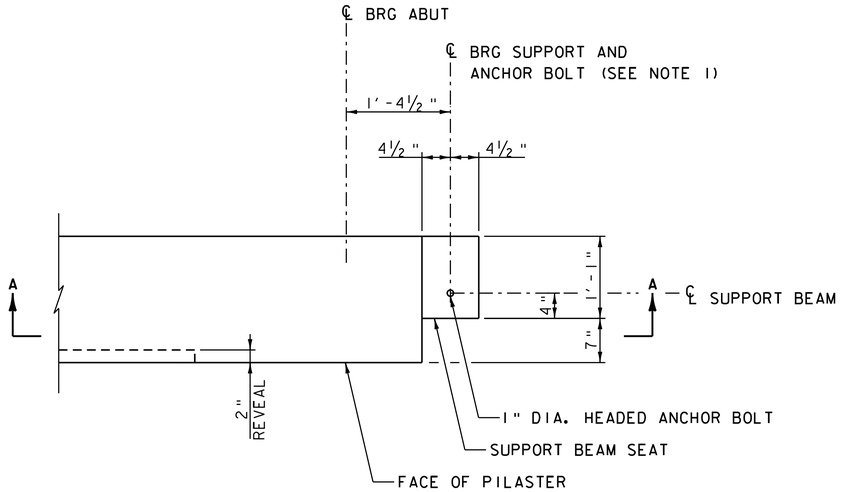

CORBEL PLAN

SCALE 1" = 1'-0"

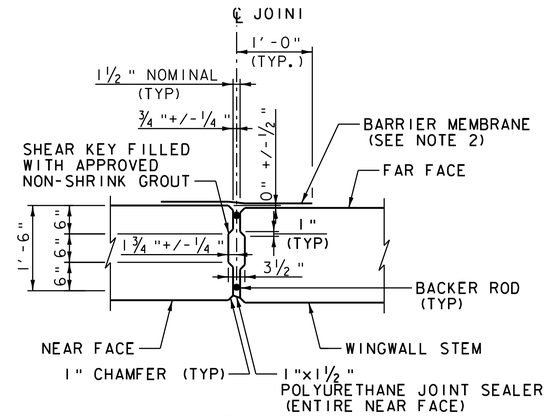

WINGWALL

STEM VERTICAL JOINT

SCALE ¾" = 1'-0"

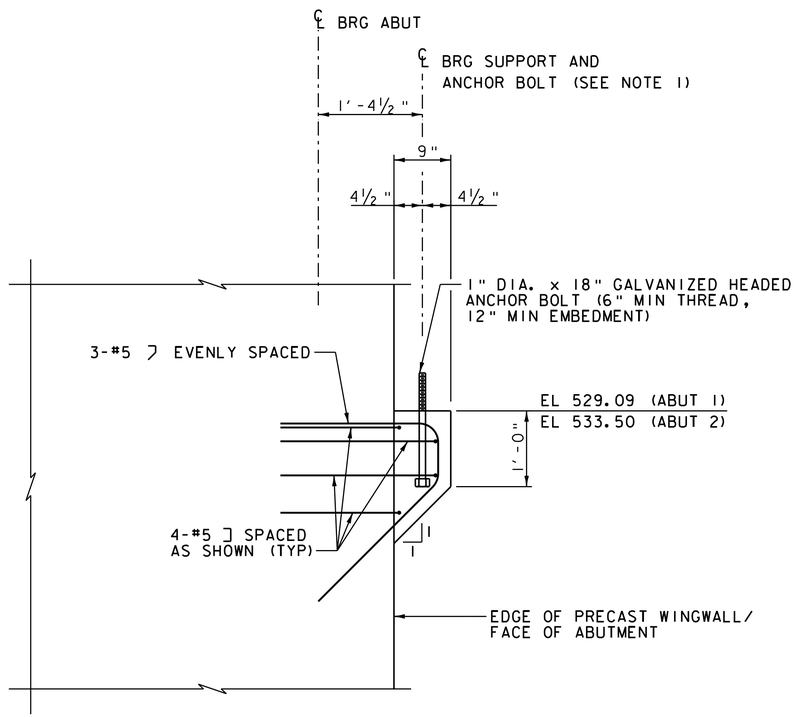

SECTION A-A

SCALE 1" = 1'-0"

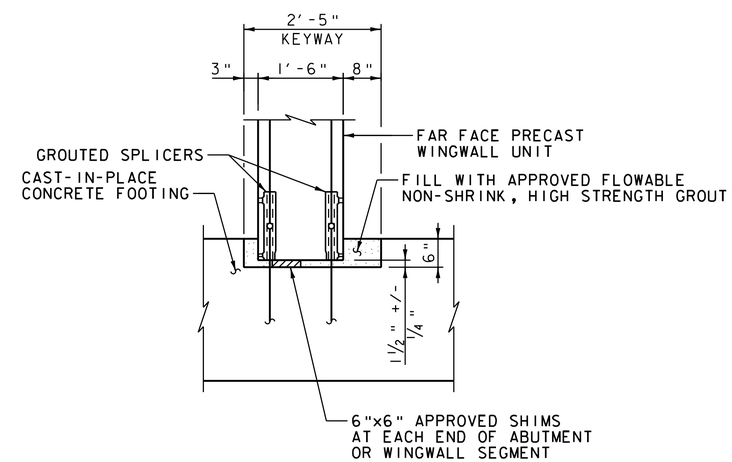

WINGWALL STEM TO

FOOTING CONNECTION

SCALE ¾" = 1'-0"

NOTES:

1. SEE SUPPORT BEAM DETAILS SHEETS FOR SUPPORT BEAM DETAILS AND ADDITIONAL INFORMATION.
2. BARRIER MEMBRANE SHALL BE ONE OF THE FOLLOWING PRODUCTS:

MANUFACTURER	PRODUCT
PROTECTO WRAP CO.	JIFFY SEAL 140/60 COLD WEATHER
ROYSTON LABORATORIES INC.	104-AHT
W.R. GRACE	LO TEMP MEMBRANE

INSTALLATION SHALL MEET ALL OF THE MANUFACTURER'S REQUIREMENTS.

VHB Vanasse Hangen Brustlin, Inc.

PROJECT NAME: MIDDLEBURY	
PROJECT NUMBER: RS 0174(8)	
FILE NAME: z78f217sub.dgn	PLOT DATE: 8/27/2013
PROJECT LEADER: M.A. COLGAN	DRAWN BY: K.D. WENTWORTH
DESIGNED BY: K.G. KRETSCH	CHECKED BY: G.S. GOODRICH
WINGWALL DETAILS (2 OF 2)	SHEET 68 OF 104

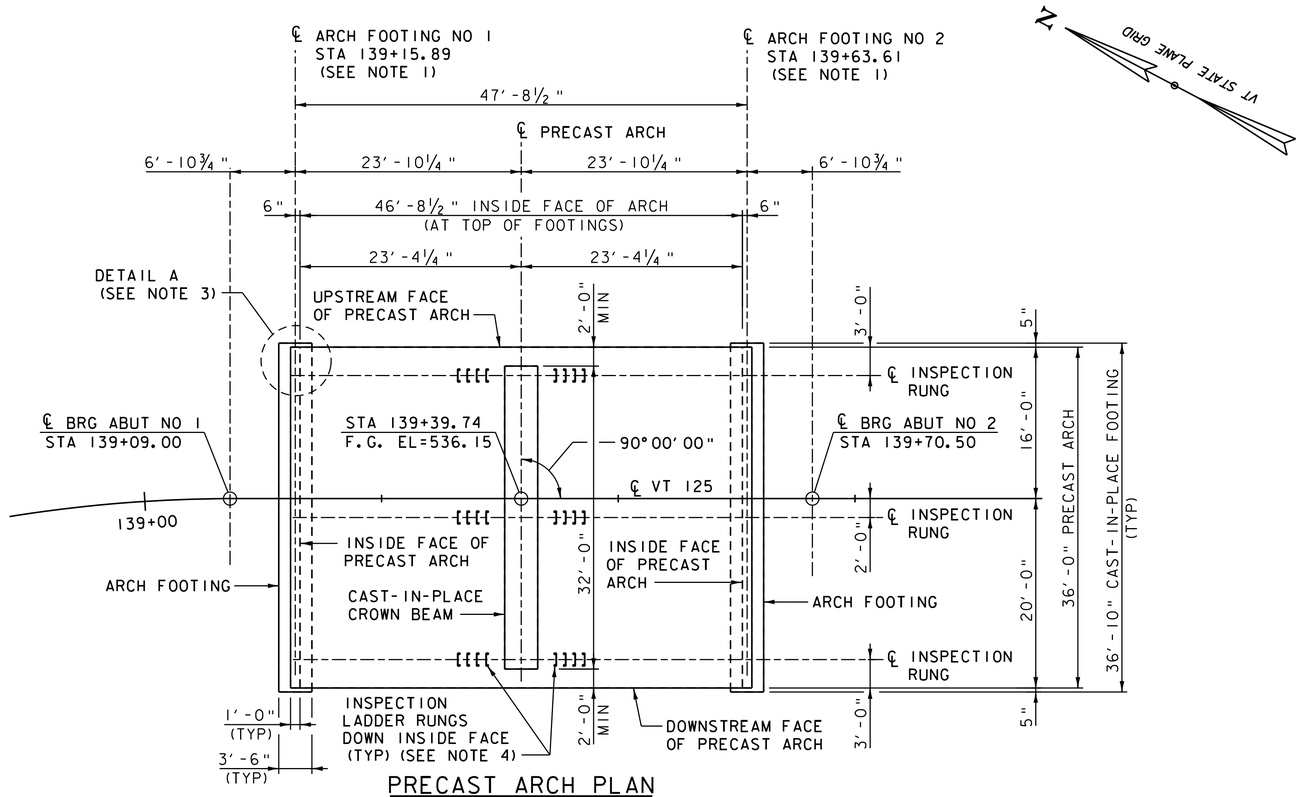

PRECAST ARCH PLAN

(OVERHEAD BRIDGE SUPERSTRUCTURE AND SUBSTRUCTURE NOT SHOWN FOR CLARITY)
SCALE ⅛" = 1'-0"

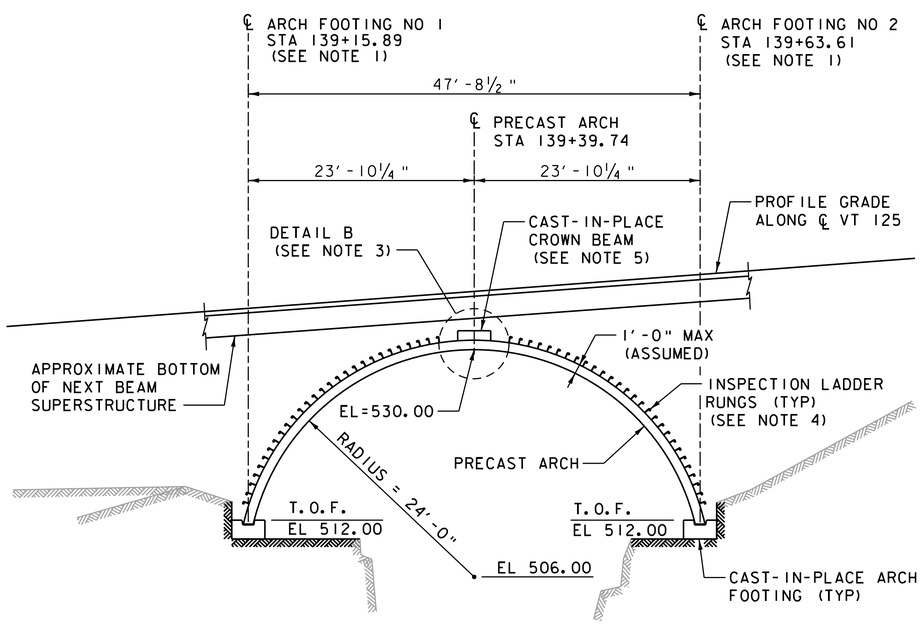

PRECAST ARCH LONGITUDINAL SECTION

(OVERHEAD BRIDGE SUBSTRUCTURE NOT SHOWN FOR CLARITY)
SCALE ⅛" = 1'-0"

NOTES:

1. THE CENTERLINE OF FOOTING IS BASED ON A 1'-0" THICK PRECAST ARCH AND IS CALCULATED FROM THE INSIDE FACE OF THE ARCH, WHICH IS THE CONTROL, AT THE TOP OF FOOTING ELEVATION. IF, BASED ON THE MANUFACTURER'S DESIGN, THE ARCH THICKNESS IS OTHER THAN 1'-0", THE CENTERLINE OF FOOTING SHALL BE REPOSITIONED AS NEEDED TO PLACE THE CENTER OF THE FOOTING DIRECTLY UNDER THE CENTER OF THE PRECAST ARCH WALL AS CALCULATED AT THE TOP OF FOOTING.
2. SEE PRECAST ARCHITECTURAL PANEL SHEETS FOR ADDITIONAL DETAILS AND INFORMATION.
3. SEE PRECAST ARCH DETAILS SHEET (2 OF 2) FOR DETAILS.
4. INSPECTION LADDER RUNGS REQUIRED ON PRECAST ARCH. SEE PRECAST ARCH NOTES ON PROJECT NOTES SHEET FOR ADDITIONAL INFORMATION.
5. SEE PRECAST ARCH DETAILS SHEET (2 OF 2) FOR ADDITIONAL DETAILS AND INFORMATION.

VHB Vanasse Hangen Brustlin, Inc.

PROJECT NAME: MIDDLEBURY	
PROJECT NUMBER: RS 0174(8)	
FILE NAME: z78f217arch.dgn	PLOT DATE: 8/27/2013
PROJECT LEADER: M.A. COLGAN	DRAWN BY: B.J. MASSE
DESIGNED BY: K.G. KRETSCH	CHECKED BY: G.S. GOODRICH
PRECAST ARCH DETAILS (1 OF 2)	SHEET 69 OF 104

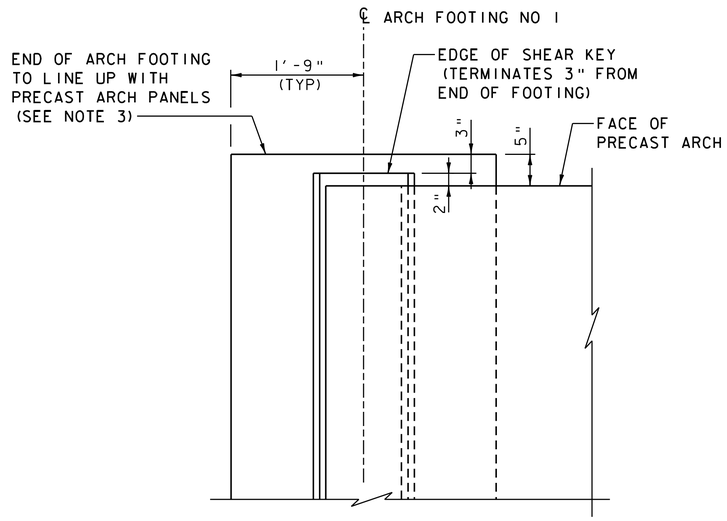

DETAIL A

(EAST END OF ARCH FOOTING NO 1 SHOWN,
ALL OTHER CORNERS SIMILAR)
SCALE 1" = 1'-0"

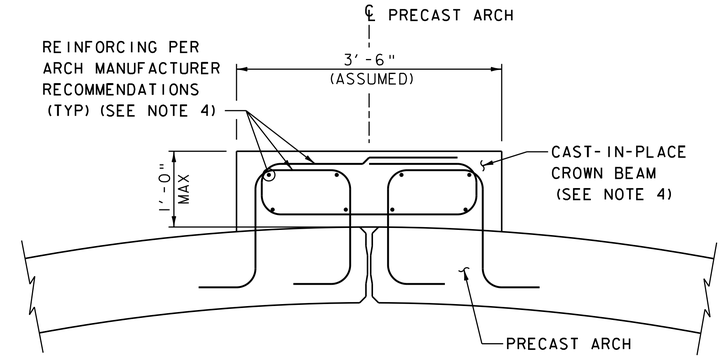

DETAIL B

SCALE 1" = 1'-0"

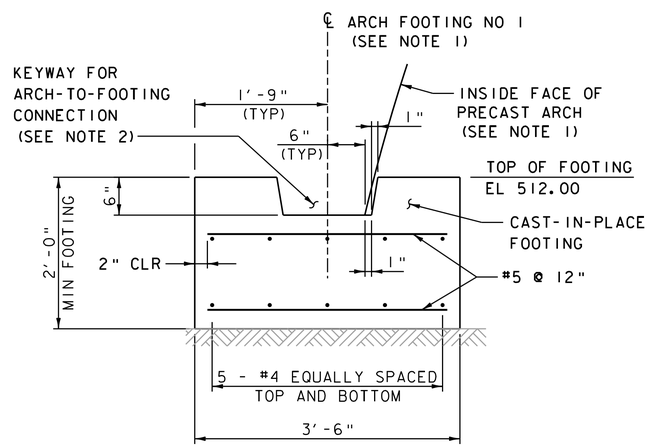

FOOTING DETAIL

(ARCH FOOTING NO 1 SHOWN,
ARCH FOOTING NO 2 SIMILAR, OPPOSITE HAND)
SCALE 1" = 1'-0"

NOTE:

NF = NEAR FACE
FF = FAR FACE
EF = EACH FACE
▲ = CUT TO FIT IN FIELD
3" CLEAR, UNLESS OTHERWISE
SPECIFIED ON THE PLANS.
2'-2" BAR LAP UNLESS OTHERWISE
SPECIFIED ON THE PLANS.

NOTES:

1. THE CENTERLINE OF FOOTING IS BASED ON A 1'-0" THICK PRECAST ARCH AND IS CALCULATED FROM THE INSIDE FACE OF THE ARCH, WHICH IS THE CONTROL, AT THE TOP OF FOOTING ELEVATION. IF, BASED ON THE MANUFACTURER'S DESIGN, THE ARCH THICKNESS IS OTHER THAN 1'-0", THE CENTERLINE OF FOOTING SHALL BE REPOSITIONED AS NEEDED TO PLACE THE CENTER OF THE FOOTING DIRECTLY UNDER THE CENTER OF THE PRECAST ARCH WALL AS CALCULATED AT THE TOP OF FOOTING.
2. ARCH-TO-FOOTING CONNECTION TO BE CONFIGURED AND GROUTED PER MANUFACTURER'S RECOMMENDATION.
3. SEE PRECAST ARCHITECTURAL PANEL SHEETS FOR ADDITIONAL DETAILS AND INFORMATION.
4. CAST-IN-PLACE CROWN BEAM IS SPECIFIC TO THE PRECAST ARCH SYSTEM AND IS DESIGNED BY THE ARCH FABRICATOR, IF REQUIRED. ALL CONCRETE, REINFORCING STEEL AND ALL OTHER CROWN BEAM RELATED MATERIALS SHALL BE PAID UNDER ITEM 540.10, "PRECAST CONCRETE STRUCTURE (ARCH)".

VHB Vanasse Hangen Brustlin, Inc.

PROJECT NAME: MIDDLEBURY	
PROJECT NUMBER: RS 0174(8)	
FILE NAME: z78f217arch.dgn	PLOT DATE: 8/27/2013
PROJECT LEADER: M.A. COLGAN	DRAWN BY: B.J. MASSE
DESIGNED BY: K.G. KRETSCH	CHECKED BY: G.S. GOODRICH
PRECAST ARCH DETAILS (2 OF 2)	SHEET 70 OF 104

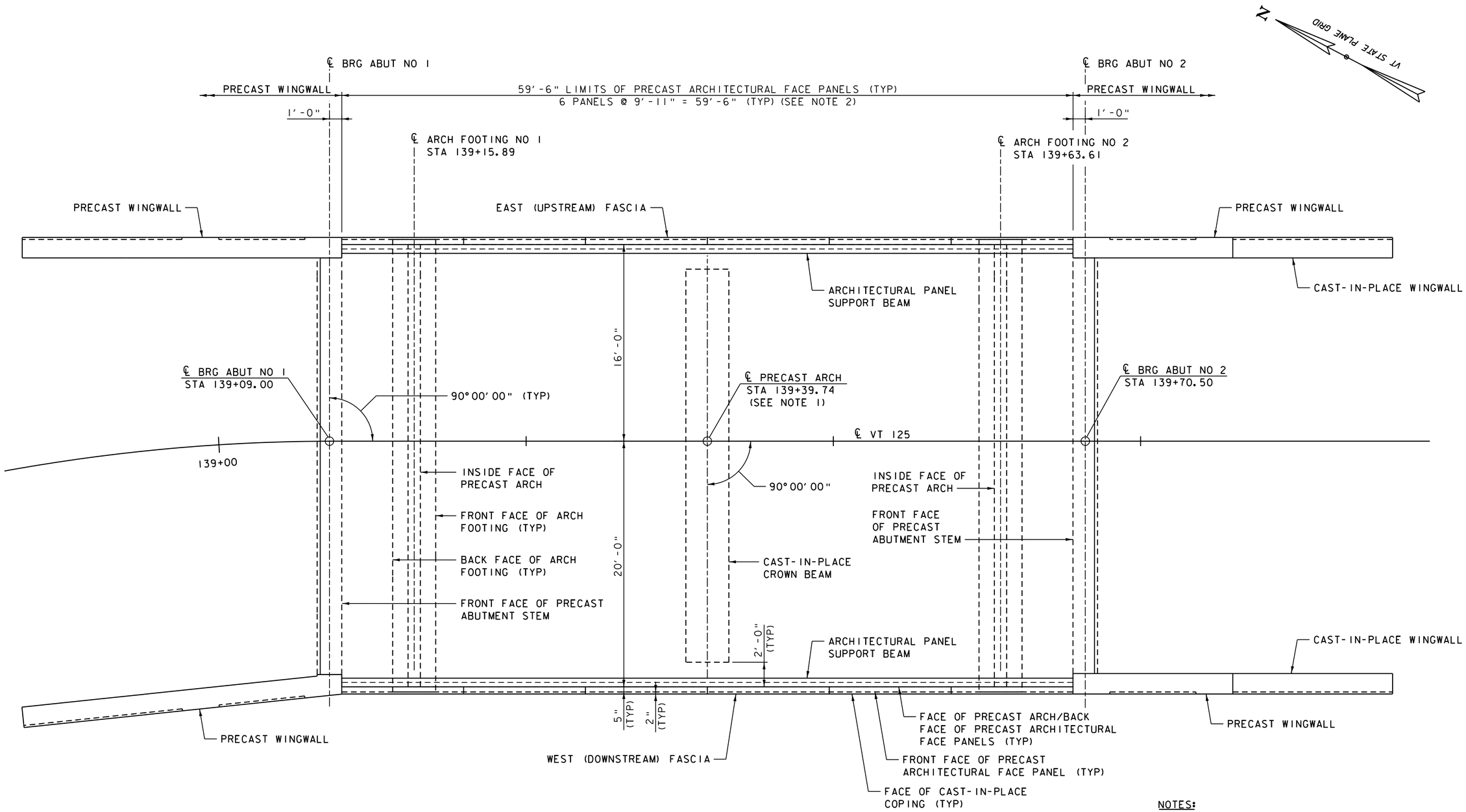

PRECAST ARCHITECTURAL PANEL PLAN

SCALE 1/4" = 1'-0"

NOTES:

1. SEE PRECAST ARCH DETAILS SHEETS FOR PRECAST ARCH GEOMETRY AND LAYOUT.
2. ALTERNATIVE PANEL JOINT LAYOUT MAY BE PROPOSED BY PANEL FABRICATOR TO FACILITATE HANDLING AND ERECTION.

VHB Vanasse Hangen Brustlin, Inc.

PROJECT NAME: MIDDLEBURY	
PROJECT NUMBER: RS 0174(8)	
FILE NAME: z78f217panel.dgn	PLOT DATE: 8/27/2013
PROJECT LEADER: M.A. COLGAN	DRAWN BY: B.J. MASSE
DESIGNED BY: K.G. KRETSCH	CHECKED BY: G.S. GOODRICH
PRECAST ARCHITECTURAL PANEL PLAN	SHEET 71 OF 104

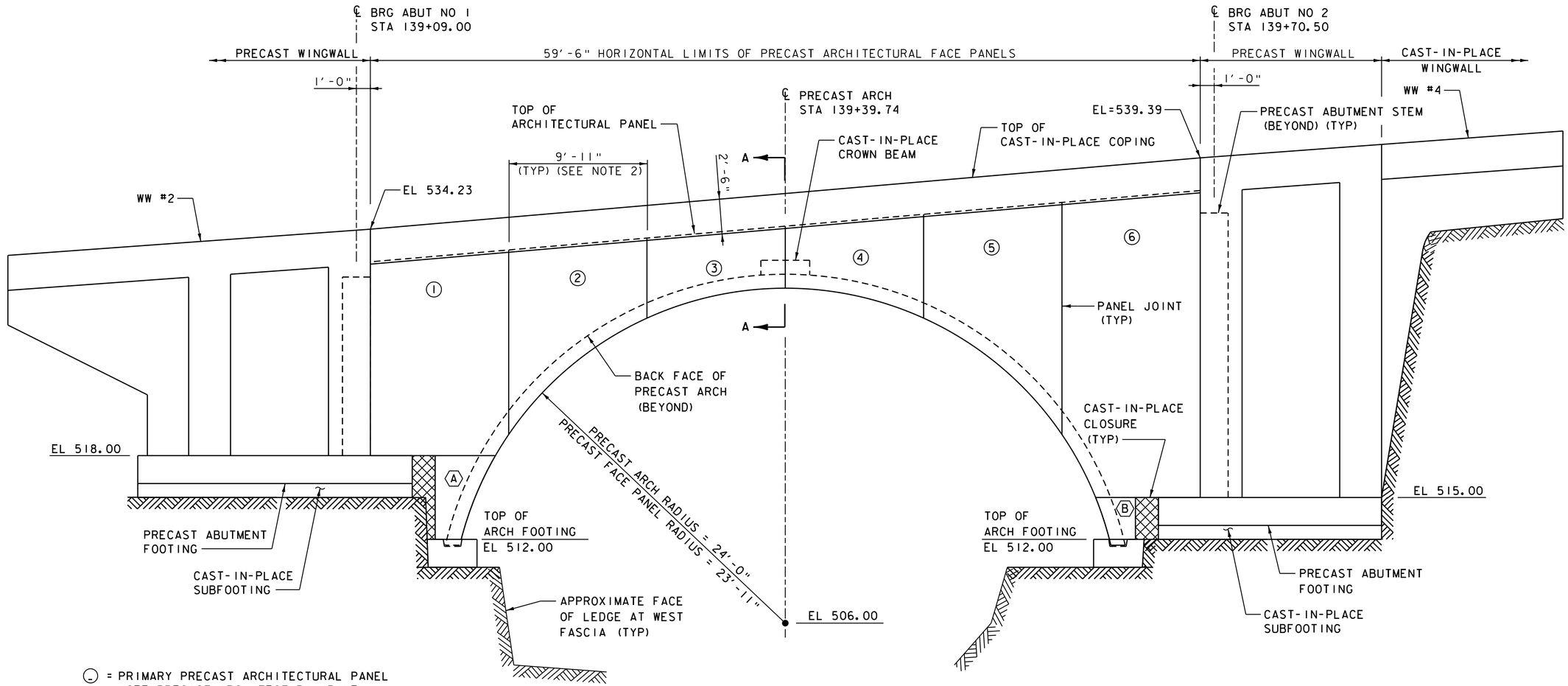

WEST PRECAST ARCHITECTURAL PANEL ELEVATION

SCALE 1/4" = 1'-0"

(-) = PRIMARY PRECAST ARCHITECTURAL PANEL (SEE PRECAST ARCHITECTURAL PANEL DETAILS FOR ADDITIONAL DETAILS)

⟨-⟩ = SECONDARY PRECAST ARCHITECTURAL PANEL (SEE PRECAST ARCHITECTURAL PANEL DETAILS FOR ADDITIONAL DETAILS)

NOTES:

1. SEE PRECAST ARCH DETAILS SHEET FOR PRECAST ARCH GEOMETRY AND LAYOUT.
2. ALTERNATIVE PANEL JOINT LAYOUT MAY BE PROPOSED BY PANEL FABRICATOR TO FACILITATE HANDLING AND ERECTION. JOINT SYMMETRY SHALL BE MAINTAINED TO ENSURE ACCEPTABLE AESTHETICS OF THE ASSEMBLED STRUCTURE. MAXIMUM OF 6 PRIMARY PANELS AND 2 SECONDARY PANELS ALLOWED PER FASCIA.
3. SEE PRECAST ARCHITECTURAL PANEL DETAILS SHEET 2 OF 2 FOR SECTION A-A.

Vanasse Hangen Brustlin, Inc.

PROJECT NAME: MIDDLEBURY	
PROJECT NUMBER: RS 0174(8)	
FILE NAME: z78f217panel.dgn	PLOT DATE: 8/27/2013
PROJECT LEADER: M.A. COLGAN	DRAWN BY: B.J. MASSE
DESIGNED BY: K.G. KRETSCH	CHECKED BY: G.S. GOODRICH
WEST PRECAST ARCHITECTURAL PANEL ELEVATION	SHEET 72 OF 104

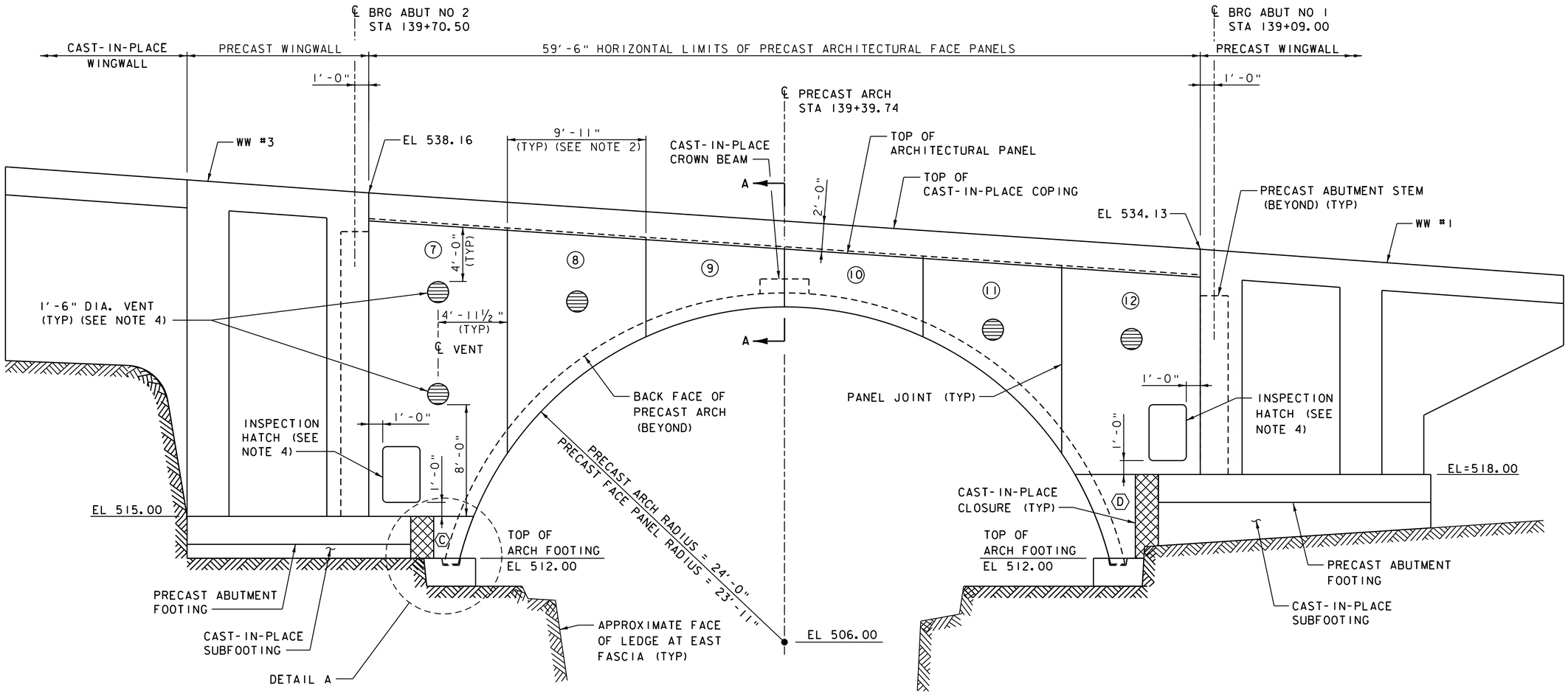

(C) = PRIMARY PRECAST ARCHITECTURAL PANEL (SEE PRECAST ARCHITECTURAL PANEL DETAILS FOR ADDITIONAL DETAILS)

⟨D⟩ = SECONDARY PRECAST ARCHITECTURAL PANEL (SEE PRECAST ARCHITECTURAL PANEL DETAILS FOR ADDITIONAL DETAILS)

EAST PRECAST ARCHITECTURAL PANEL ELEVATION

SCALE ¼" = 1'-0"

NOTES:

1. SEE PRECAST ARCH DETAILS SHEET FOR PRECAST ARCH GEOMETRY AND LAYOUT.
2. ALTERNATIVE PANEL JOINT LAYOUT MAY BE PROPOSED BY PANEL FABRICATOR TO FACILITATE HANDLING AND ERECTION. JOINT SYMMETRY SHALL BE MAINTAINED TO ENSURE ACCEPTABLE AESTHETICS OF THE ASSEMBLED STRUCTURE. MAXIMUM OF 6 PANELS ALLOWED PER FASCIA.
3. SEE PRECAST ARCHITECTURAL PANEL DETAILS SHEET 2 OF 2 FOR SECTION A-A AND DETAIL A.
4. SEE PROJECT NOTES FOR ADDITIONAL PRECAST ARCHITECTURAL PANEL NOTES AND INFORMATION.

VHB Vanasse Hangen Brustlin, Inc.

PROJECT NAME: MIDDLEBURY	
PROJECT NUMBER: RS 0174(8)	
FILE NAME: z78f217panel.dgn	PLOT DATE: 8/27/2013
PROJECT LEADER: M.A. COLGAN	DRAWN BY: B.J. MASSE
DESIGNED BY: K.G. KRETSCH	CHECKED BY: G.S. GOODRICH
EAST PRECAST ARCHITECTURAL PANEL ELEVATION	SHEET 73 OF 104

VHB 57438

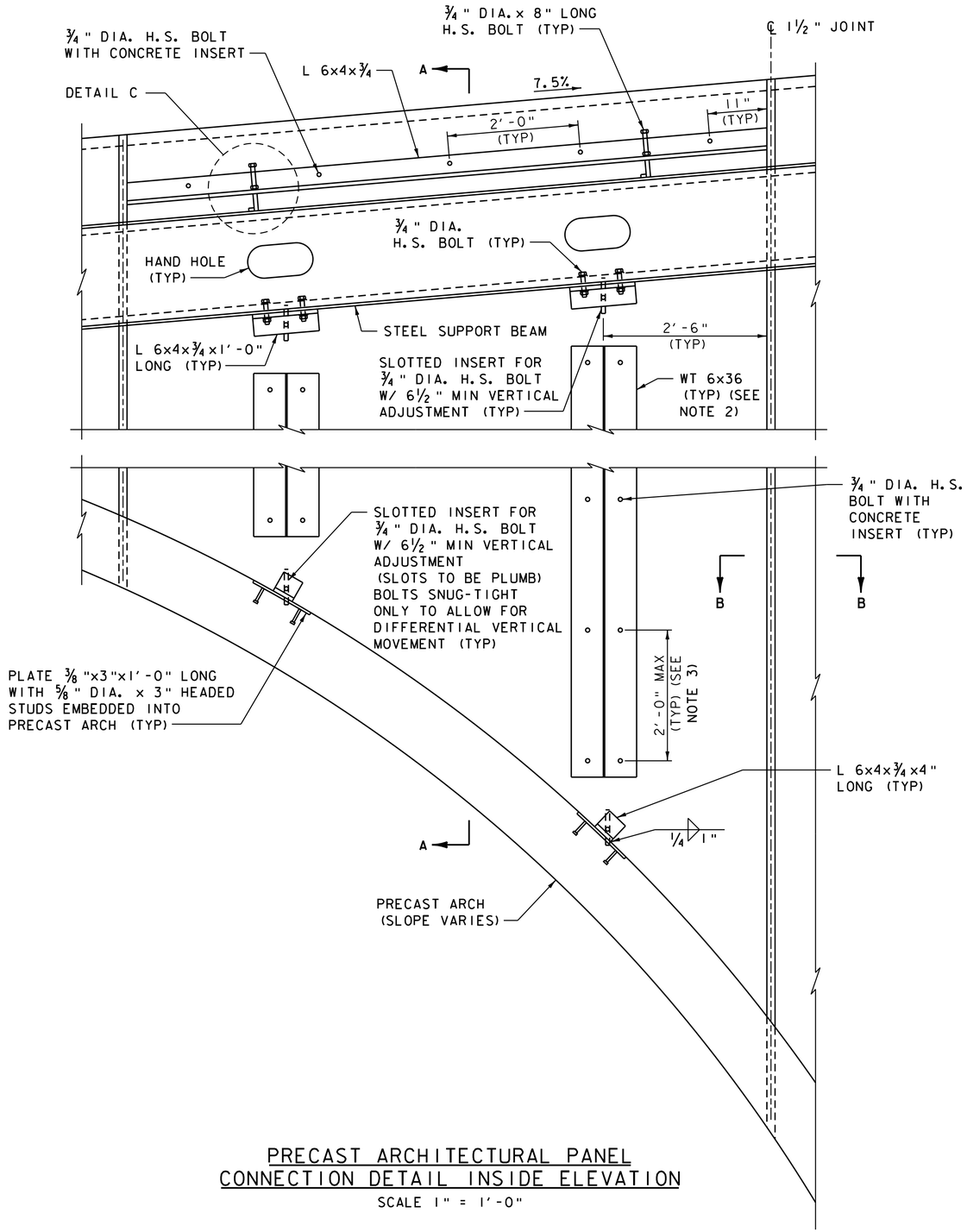

PRECAST ARCHITECTURAL PANEL
CONNECTION DETAIL INSIDE ELEVATION
SCALE 1" = 1'-0"

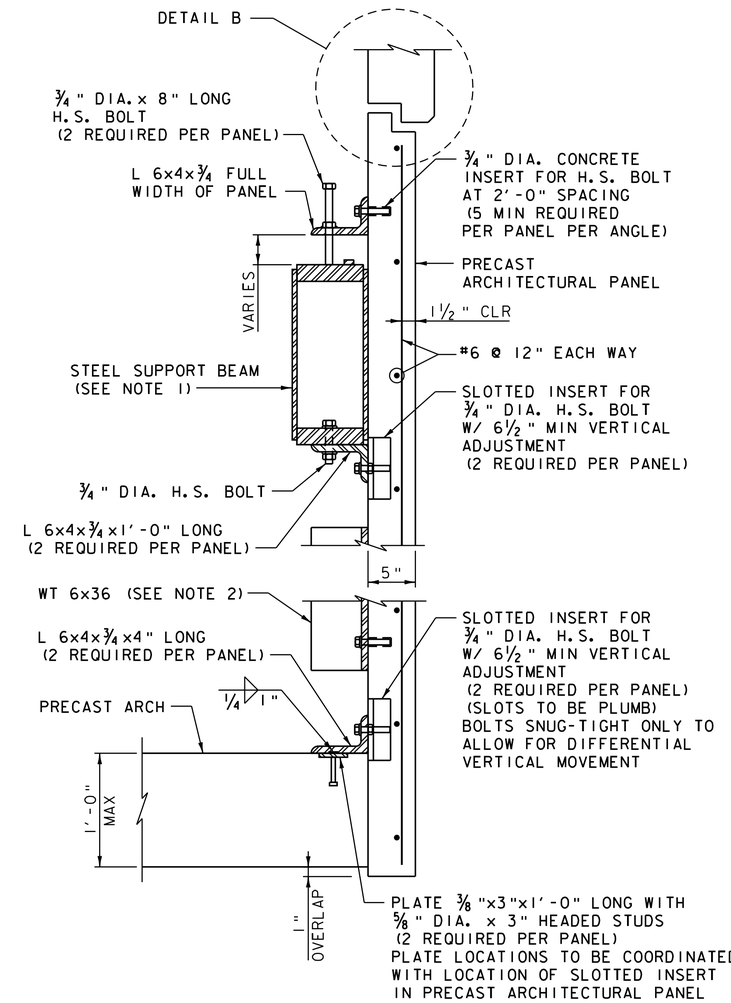

SECTION A-A
SCALE 1½" = 1'-0"

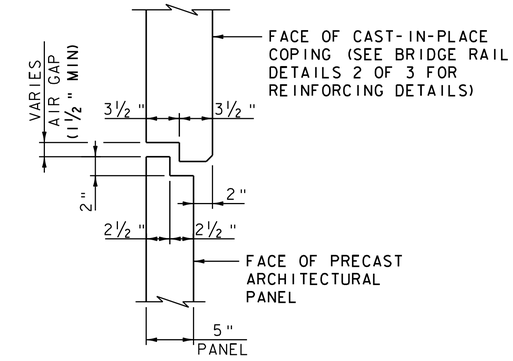

DETAIL B
SCALE 1½" = 1'-0"

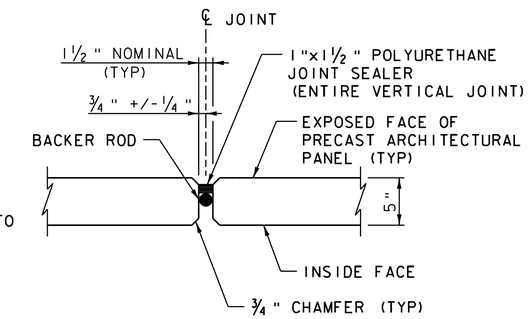

SECTION B-B
SCALE 1½" = 1'-0"

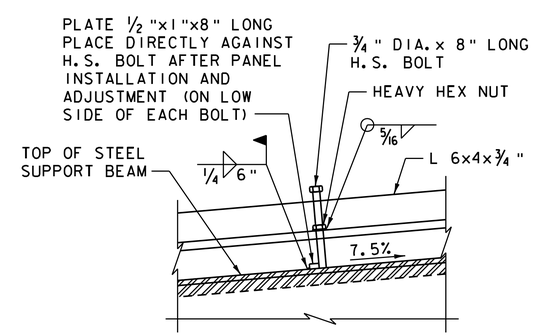

DETAIL C
SCALE 1½" = 1'-0"

NOTES:

1. SEE SUPPORT BEAM DETAILS SHEET (1 OF 2) FOR SUPPORT BEAM DETAILS.
2. WT 6x36 SHALL BE INSTALLED IN THE SHOP TO FACILITATE HANDLING, SHIPPING, AND ERECTION. WT MEMBERS SHALL BE PERMANENTLY LEFT-IN-PLACE. WT MEMBERS SHALL CONFORM TO AASHTO M270M/M270 GRADE 50 AND SHALL BE GALVANIZED. ALL FIELD CONNECTIONS SHALL BE MADE WITH ¾" DIAMETER HIGH-STRENGTH BOLTS IN 13/16" DIAMETER HOLES. ALL COST FOR WT MEMBERS, BOLTS, AND INSERTS SHALL BE INCLUDED IN ITEM 540.10, "PRECAST CONCRETE STRUCTURE (ARCHITECTURAL PANELS).
3. A MINIMUM OF 3 PAIRS OF FASTENERS SHALL BE USED FOR SHORTER WT MEMBERS. MAXIMUM SPACING OF FASTENERS IS 2'-0".

VHB Vanasse Hangen Brustlin, Inc.

PROJECT NAME: MIDDLEBURY	
PROJECT NUMBER: RS 0174(8)	
FILE NAME: z78f217panel.dgn	PLOT DATE: 8/27/2013
PROJECT LEADER: M.A. COLGAN	DRAWN BY: B.J. MASSE
DESIGNED BY: K.G. KRETSCH	CHECKED BY: G.S. GOODRICH
PRECAST ARCHITECTURAL PANEL DETAILS (1 OF 2)	SHEET 74 OF 104

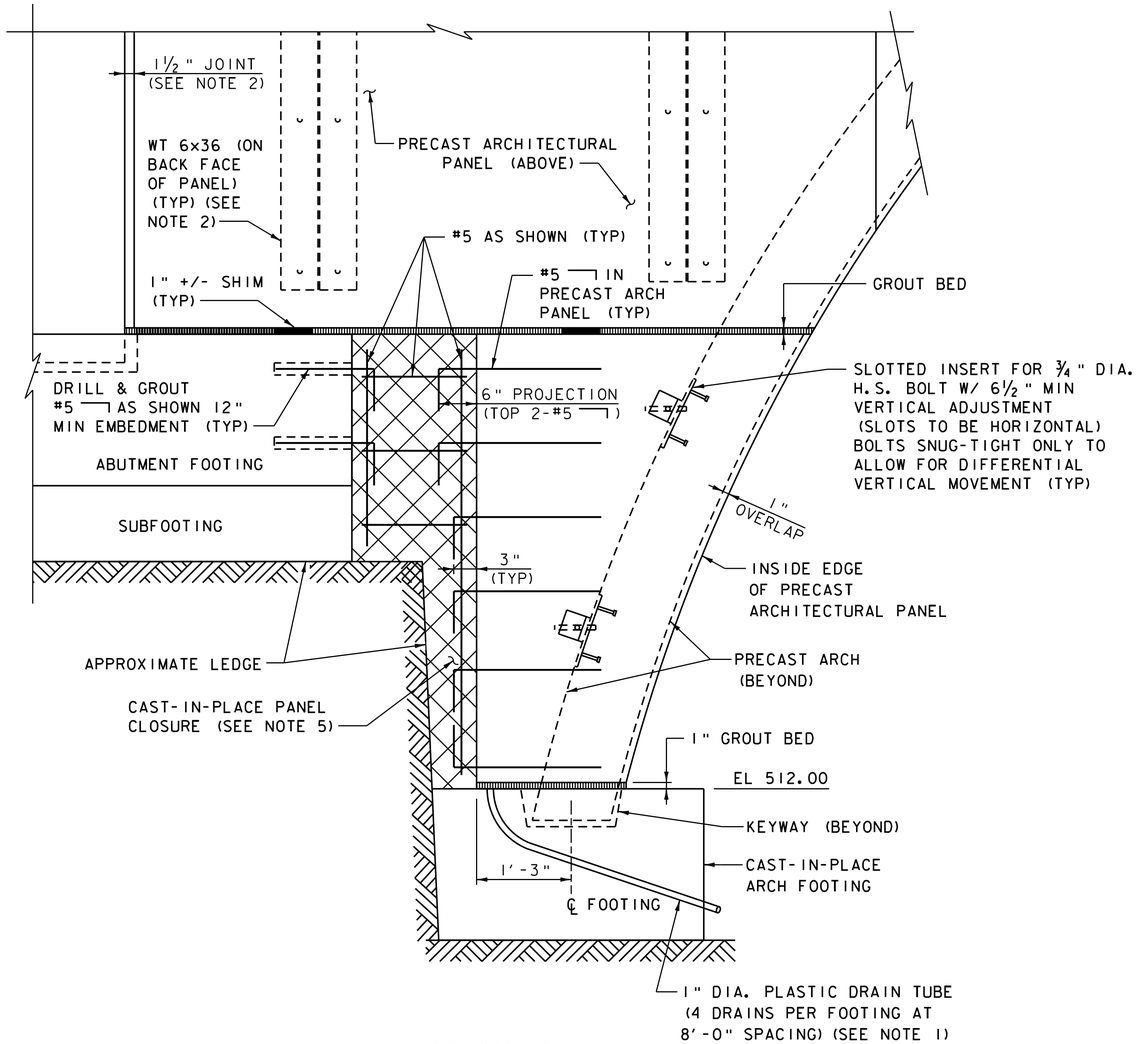

DETAIL A
PRECAST ARCHITECTURAL PANEL
ELEVATION DETAIL AT ARCH FOOTING

(WEST ELEVATION AT ARCH FOOTING NO 1 SHOWN, ALL OTHER FOOTING CORNERS SIMILAR)
SCALE 1" = 1'-0"

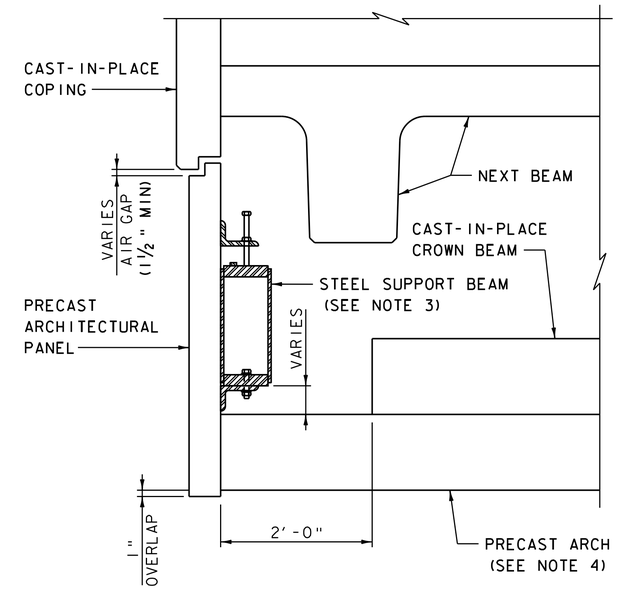

SECTION A-A

(RAILING AND OVERLAY NOT SHOWN FOR CLARITY)
(REINFORCING STEEL NOT SHOWN FOR CLARITY)
SCALE 1" = 1'-0"

= LIMITS OF CAST-IN-PLACE PANEL CLOSURE. THICKNESS OF CLOSURE TO MATCH THICKNESS OF ARCHITECTURAL PANELS.

NOTES:

1. 1" PLASTIC DRAIN TUBES SHALL BE ENCLOSED WITH SCREENS TO PREVENT ACCESS OF VERMIN AND BIRDS. COST FOR DRAIN TUBES WITH SCREENS SHALL BE INCLUDED IN ITEM 501.34, CONCRETE, HIGH PERFORMANCE CLASS B.
2. SEE PRECAST ARCHITECTURAL PANEL DETAILS SHEET (1 OF 2) FOR ADDITIONAL INFORMATION.
3. SEE SUPPORT BEAM DETAILS FOR ADDITIONAL INFORMATION.
4. SEE PRECAST ARCH DETAILS FOR ADDITIONAL INFORMATION.
5. CAST-IN-PLACE PANEL CLOSURE SHALL BE ITEM 501.33 "CONCRETE HIGH PERFORMANCE CLASS A (FPQ)".

Vanasse Hangen Brustlin, Inc.

PROJECT NAME: MIDDLEBURY	
PROJECT NUMBER: RS 0174(8)	
FILE NAME: z78f217panel.dgn	PLOT DATE: 8/27/2013
PROJECT LEADER: M.A. COLGAN	DRAWN BY: B.J. MASSE
DESIGNED BY: K.G. KRETSCH	CHECKED BY: G.S. GOODRICH
PRECAST ARCHITECTURAL PANEL DETAILS (2 OF 2)	SHEET 75 OF 104

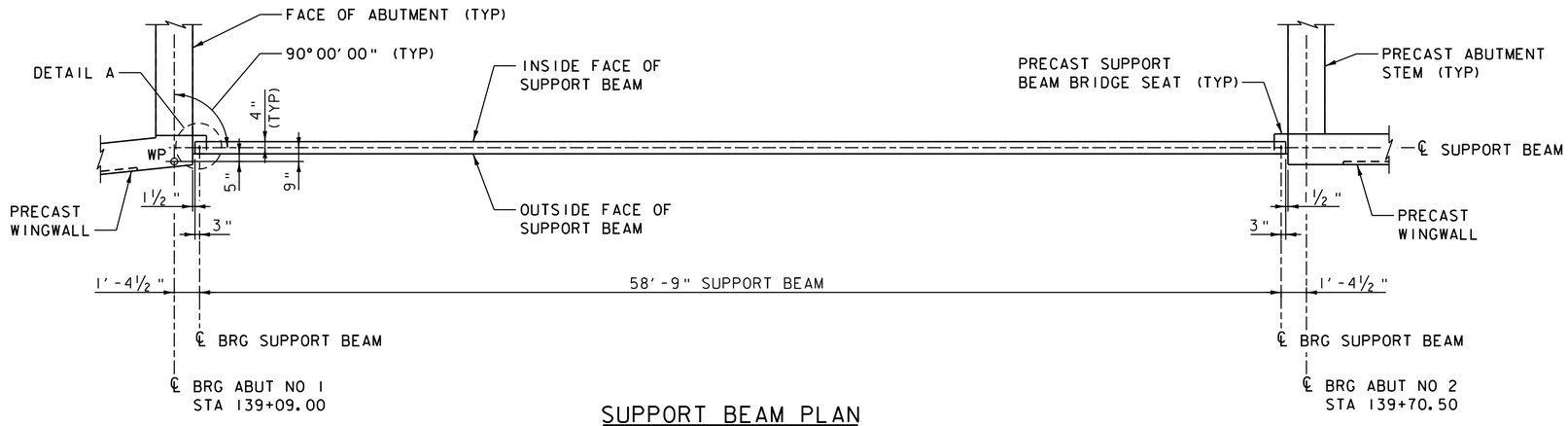

SUPPORT BEAM PLAN

(SUPPORT BEAM AT WEST FASCIA SHOWN, SUPPORT BEAM AT EAST FASCIA SIMILAR)

SCALE ¼" = 1'-0"

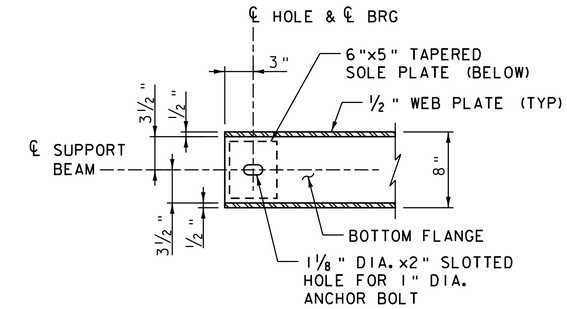

DETAIL A

SCALE 1½" = 1'-0"

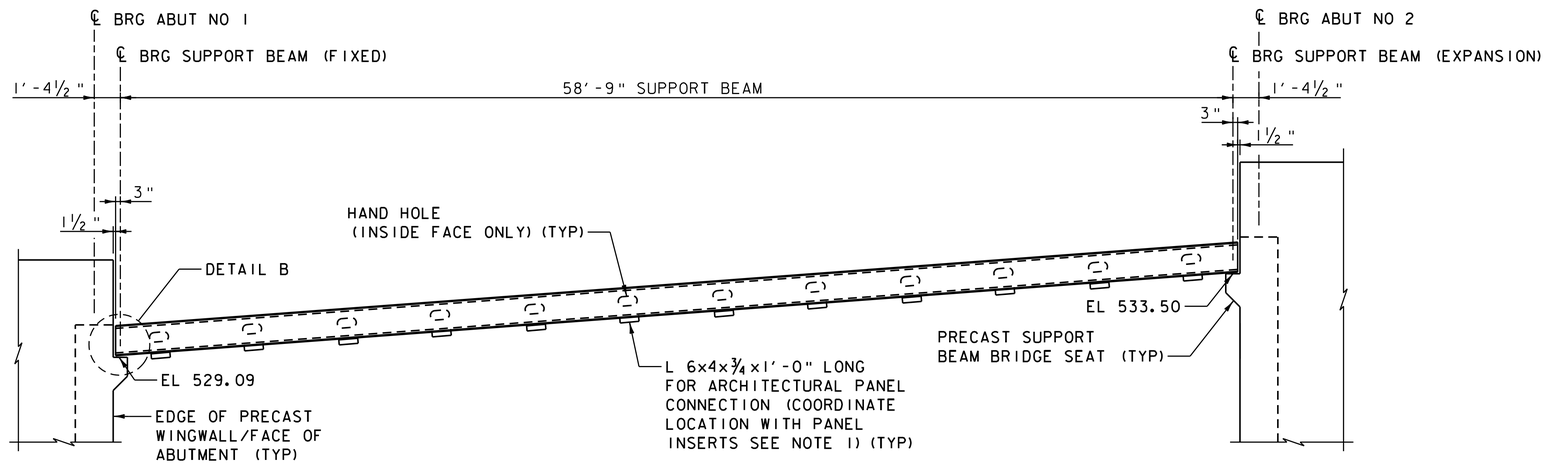

SUPPORT BEAM ELEVATION

SCALE ¼" = 1'-0"

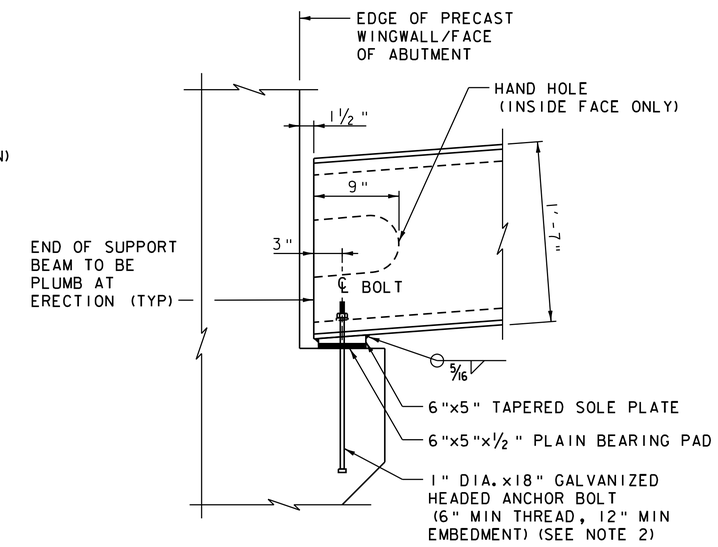

DETAIL B

ABUTMENT NO 1 SHOWN, ABUTMENT NO 2 SIMILAR

SCALE 1½" = 1'-0"

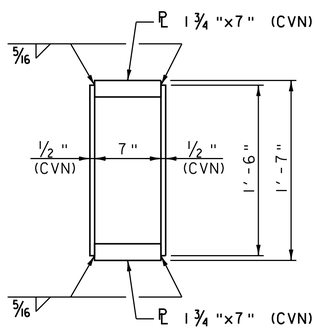

ARCH PANEL SUPPORT BEAM

SCALE 1½" = 1'-0"

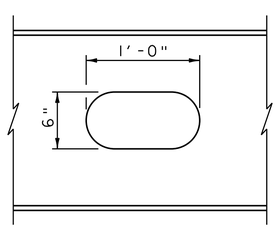

HAND HOLE DETAIL

SCALE 1½" = 1'-0"

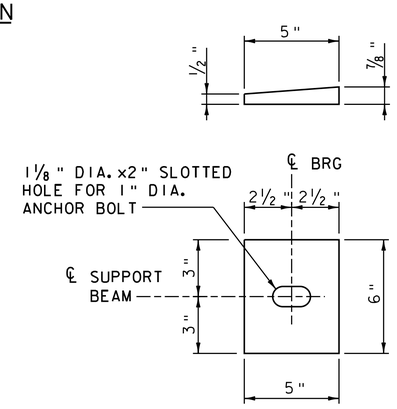

SOLE PLATE DETAIL

(4 REQUIRED)

SCALE 3" = 1'-0"

NOTES:

1. SEE PRECAST ARCHITECTURAL PANEL DETAIL SHEETS FOR ADDITIONAL INFORMATION.
2. ANCHOR BOLT NUT SHALL BE TIGHTENED AT FIXED END AND TIGHTENED THEN LOOSENED ONE TURN AT EXPANSION END.
3. CHARPY V-NOTCH TESTING REQUIRED FOR ALL MEMBERS MARKED (CVN).
4. PAYMENT FOR FURNISHING AND INSTALLING SUPPORT BEAM AND ASSOCIATED HARDWARE WILL BE MADE UNDER CONTRACT ITEM 506.60, "STRUCTURAL STEEL".

Vanasse Hangen Brustlin, Inc.

PROJECT NAME: MIDDLEBURY	
PROJECT NUMBER: RS 0174(8)	
FILE NAME: z78f217panel.dgn	PLOT DATE: 8/27/2013
PROJECT LEADER: M.A. COLGAN	DRAWN BY: B.J. MASSE
DESIGNED BY: K.G. KRETSCH	CHECKED BY: G.S. GOODRICH
SUPPORT BEAM DETAILS (1 OF 2)	SHEET 76 OF 104

CAMBER TABLE @ 1/10 POINTS (INCHES)												
	POINT ON SUPPORT BEAM	℄ BRG SUPPORT BEAM AT ABUT NO 1	0.1L	0.2L	0.3L	0.4L	0.5L	0.6L	0.7L	0.8L	0.9L	℄ BRG SUPPORT BEAM AT ABUT NO 2
LT & RT BEAM	STEEL DL	0.00	-0.18	-0.34	-0.47	-0.55	-0.58	-0.55	-0.47	-0.34	-0.18	0.00
	PRECAST ARCHITECTURAL PANEL DL	0.00	-0.57	-1.07	-1.46	-1.70	-1.80	-1.73	-1.50	-1.12	-0.60	0.00
	TOTAL DEFLECTION	0.00	-0.75	-1.41	-1.93	-2.25	-2.38	-2.28	-1.97	-1.46	-0.78	0.00
	RESIDUAL CAMBER	0.00	0.00	0.00	0.00	0.00	0.00	0.00	0.00	0.00	0.00	0.00
	TOTAL CAMBER	0.00	0.75	1.41	1.93	2.25	2.38	2.28	1.97	1.46	0.78	0.00

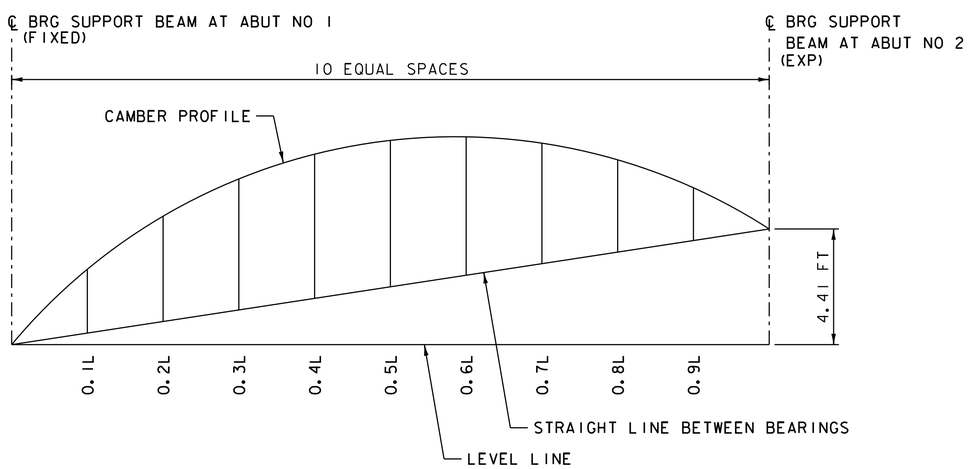

CAMBER DIAGRAM

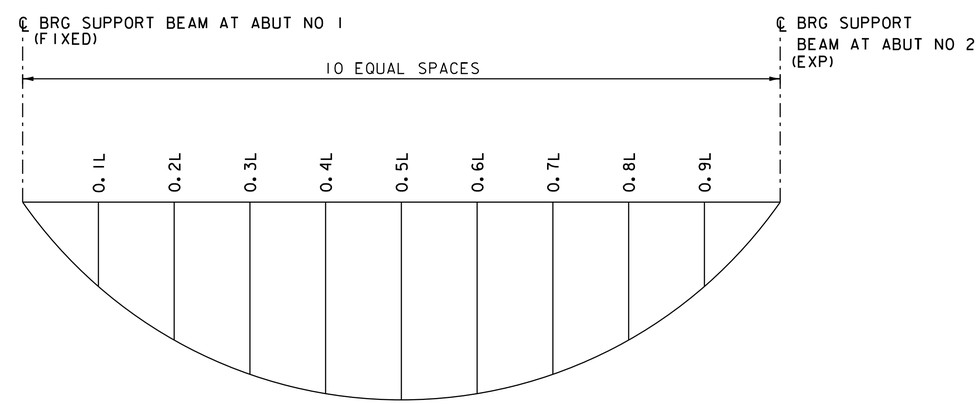

DEFLECTION DIAGRAM

Vanasse Hangen Brustlin, Inc.

PROJECT NAME: MIDDLEBURY	
PROJECT NUMBER: RS 017(8)	
FILE NAME: z78f217sup.dgn	PLOT DATE: 8/27/2013
PROJECT LEADER: M.A. COLGAN	DRAWN BY: B.J. MASSE
DESIGNED BY: K.G. KRETSCH	CHECKED BY: G.S. GOODRICH
SUPPORT BEAM DETAILS (2 OF 2)	SHEET 77 OF 104

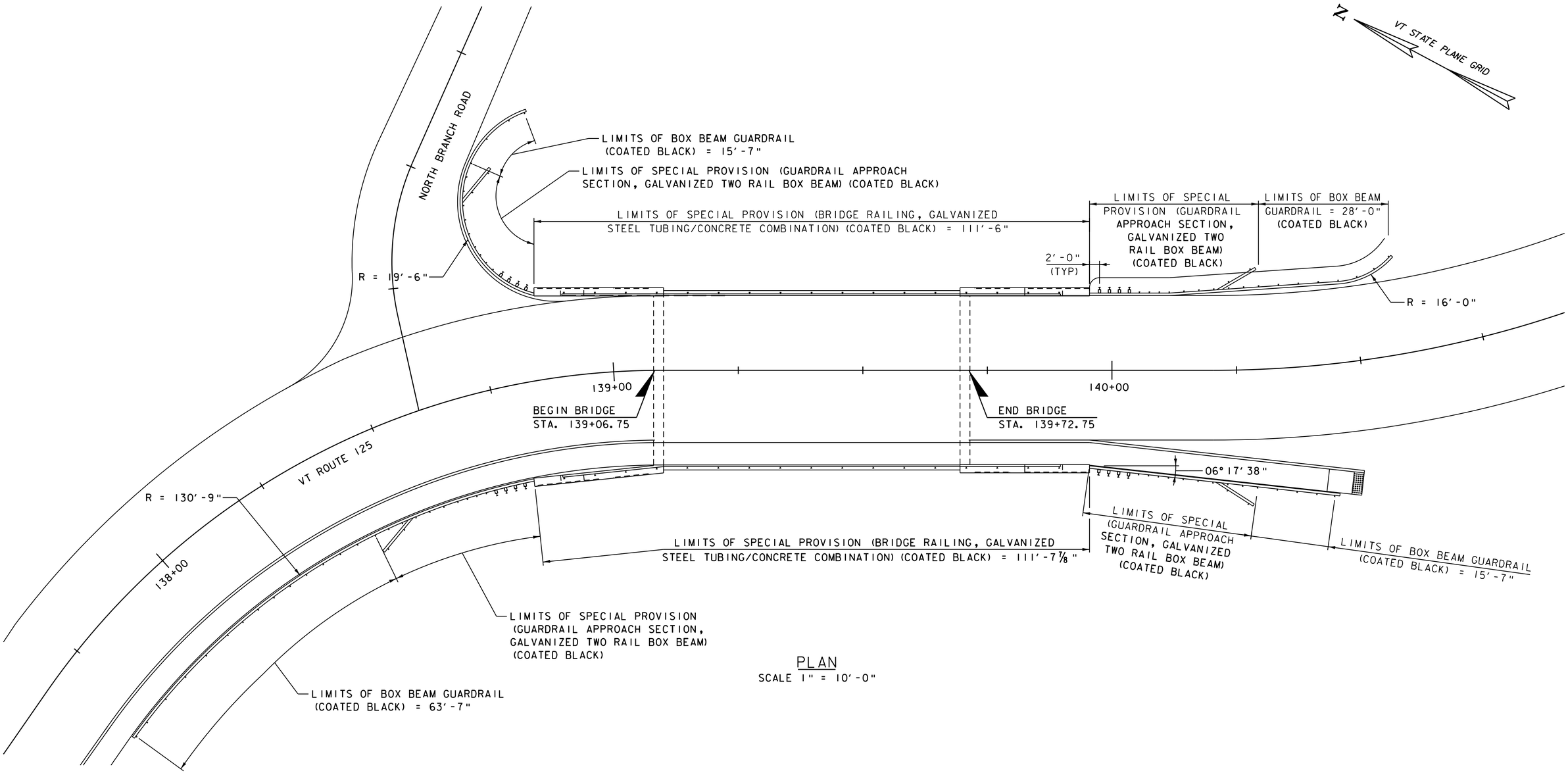

PLAN

SCALE 1" = 10'-0"

NOTE:

SEE BRIDGE RAIL DETAILS SHEETS FOR APPROACH RAILING LENGTH AND SPACING.

Vanasse Hangen Brustlin, Inc.

PROJECT NAME: MIDDLEBURY	
PROJECT NUMBER: RS 0174(8)	
FILE NAME: z78f217rail.dgn	PLOT DATE: 8/27/2013
PROJECT LEADER: M.A. COLGAN	DRAWN BY: B.J. MASSE
DESIGNED BY: G.S. GOODRICH	CHECKED BY: G.S. GOODRICH
BRIDGE RAIL LAYOUT	SHEET 78 OF 104

VHB 57438

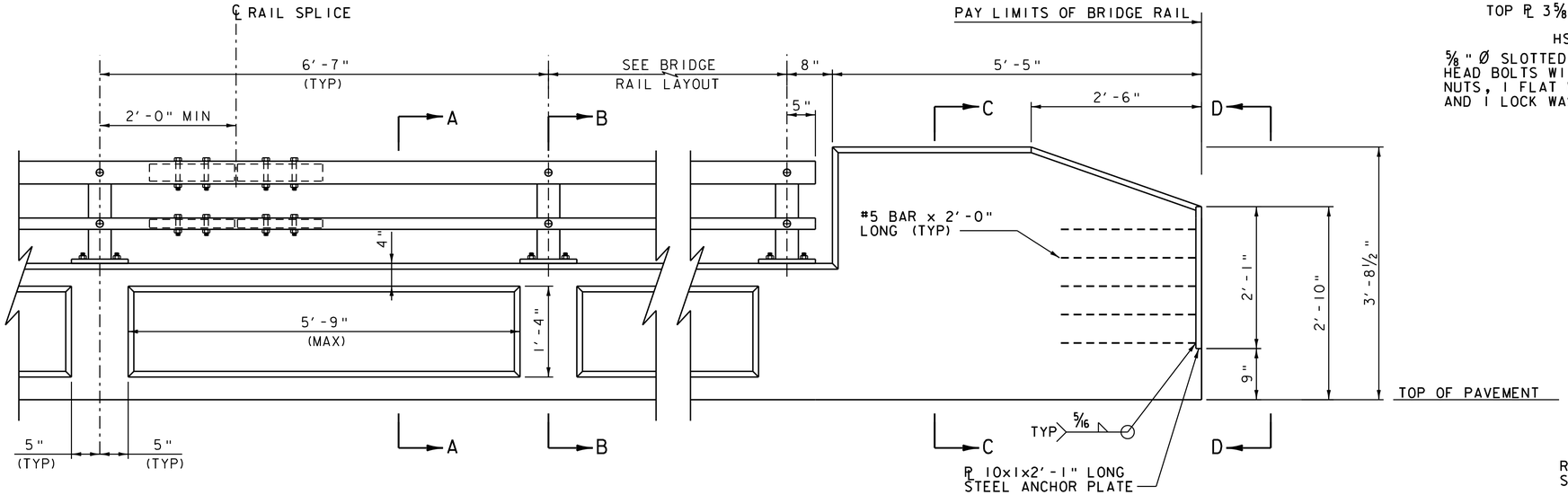

RAILING & END WALL APPROACH
SCALE 1" = 1'-0"

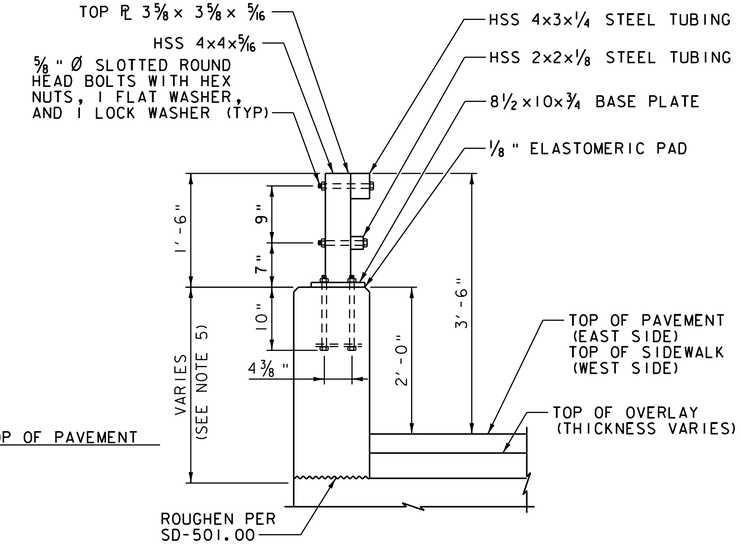

RAIL TYPICAL SECTION
SCALE 1" = 1'-0"

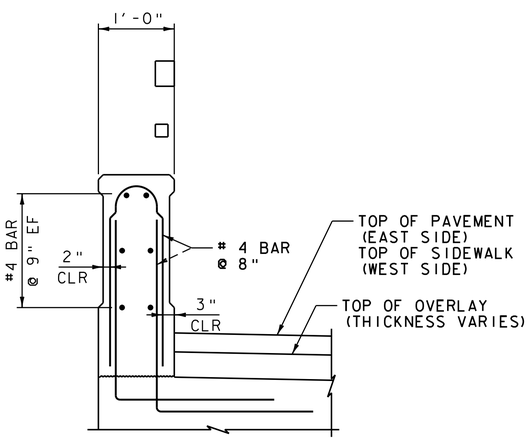

SECTION A-A
(ON BRIDGE)
SCALE 1" = 1'-0"

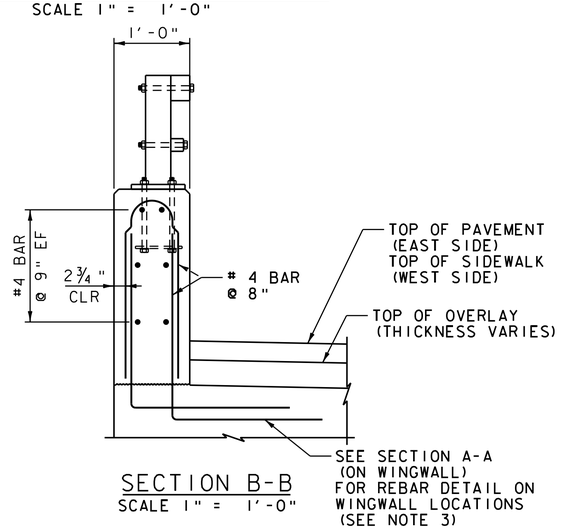

SECTION B-B
SCALE 1" = 1'-0"

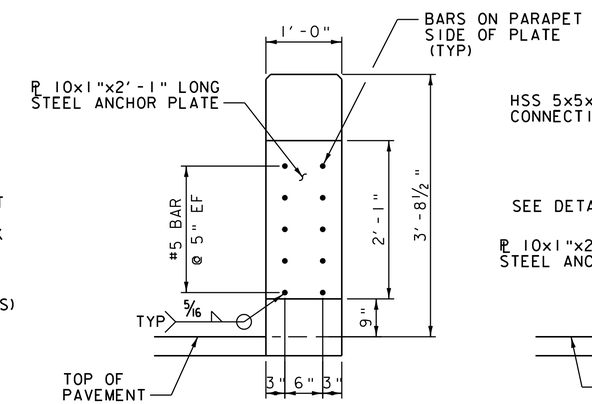

SHOWING EMBEDDED REBAR

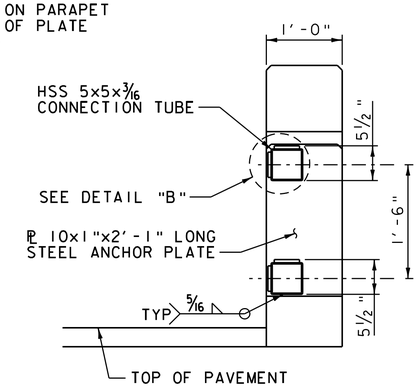

WITH HSS CONNECTOR TUBE

VIEW D-D

NOTE:

NF = NEAR FACE
FF = FAR FACE
EF = EACH FACE
▲ = CUT TO FIT IN FIELD
3" CLEAR, UNLESS OTHERWISE SPECIFIED ON THE PLANS.
2'-2" BAR LAP UNLESS OTHERWISE SPECIFIED ON THE PLANS.

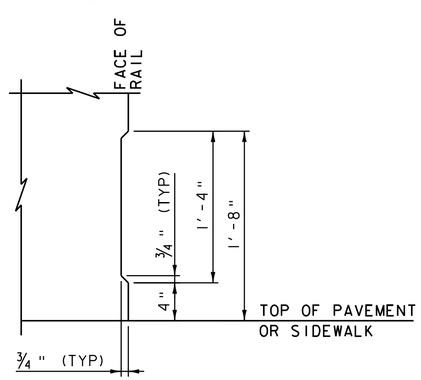

ASTHETIC TREATMENT DETAIL
SCALE 1½" = 1'-0"

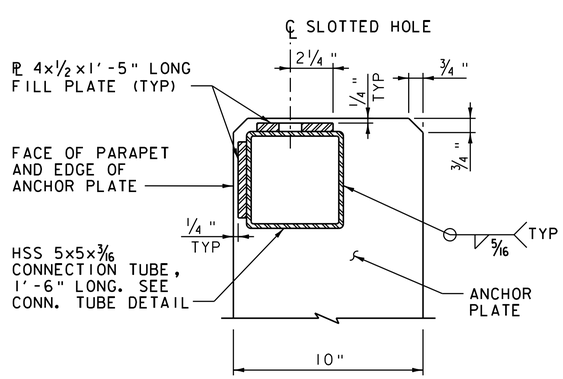

DETAIL B
SCALE 3" = 1'-0"

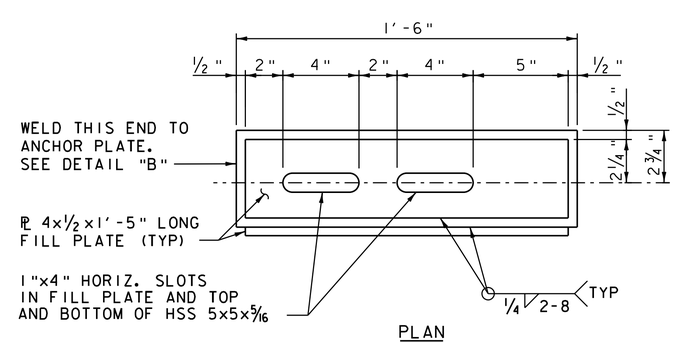

PLAN

CONNECTION TUBE DETAIL
SCALE 3" = 1'-0"

NOTES:

1. BRIDGE RAIL SHALL HAVE A RUBBED FINISH IN ACCORDANCE WITH SECTION 501.
2. HOLES AND RECESSES ARE TO BE FORMED OR CORED, PERCUSSION DRILLING IS NOT ALLOWED.
3. ALL STEEL COMPONENTS SHALL BE POWDER COATED BLACK AFTER GALVANIZING.
4. SEE PROJECT NOTES SHEET FOR ADDITIONAL BRIDGE RAILING NOTES.
5. SEE BRIDGE RAIL DETAILS (2 OF 3) FOR SECTION A-A AND SECTION C-C ON WINGWALL AND DIMENSIONS OF PARAPET HEIGHT ALONG THE SPAN.
6. SEE PRECAST ARCHITECTURAL PANEL DETAILS (2 OF 2) FOR REINFORCING EXTENDING INTO PRECAST COPING.
7. SEE STANDARDS S-352B AND S-352C FOR STEEL TUBING SPLICE DETAILS AND RAIL POST BASE PLATE DETAILS.

PROJECT NAME: MIDDLEBURY	
PROJECT NUMBER: RS 0174(8)	
FILE NAME: z78f217brail_dt.dgn	PLOT DATE: 8/27/2013
PROJECT LEADER: G.S. GOODRICH	DRAWN BY: J.L. LEMIEUX
DESIGNED BY: K.G. KRETSCH	CHECKED BY: S.E. BURBANK
BRIDGE RAIL DETAILS (1 OF 3)	SHEET 79 OF 104

VHB 57438

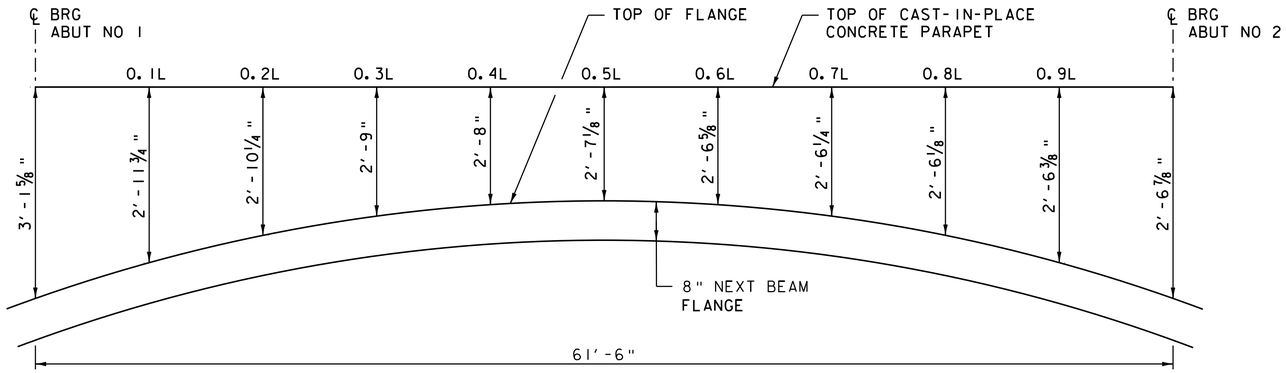

CAST-IN-PLACE CONCRETE PARAPET HEIGHT DETAIL (EAST SIDE)
NOT TO SCALE

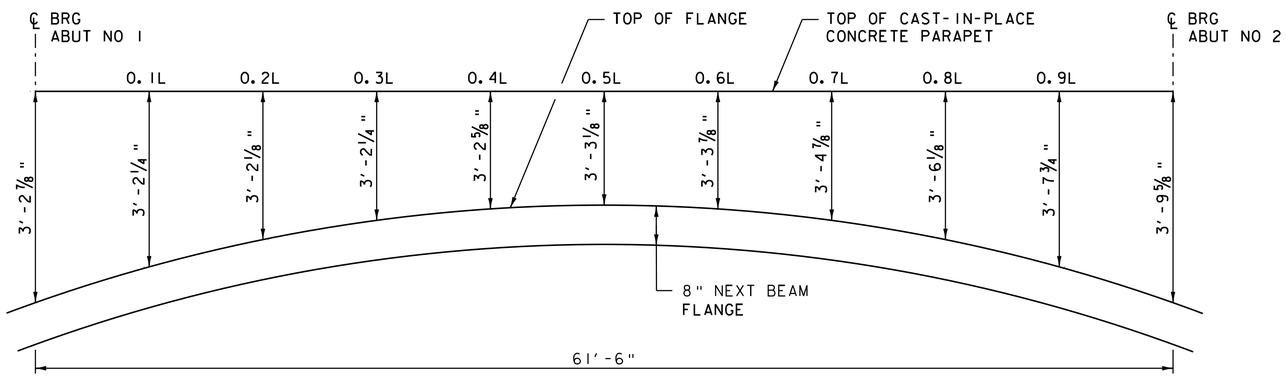

CAST-IN-PLACE CONCRETE PARAPET HEIGHT DETAIL (WEST SIDE)
NOT TO SCALE

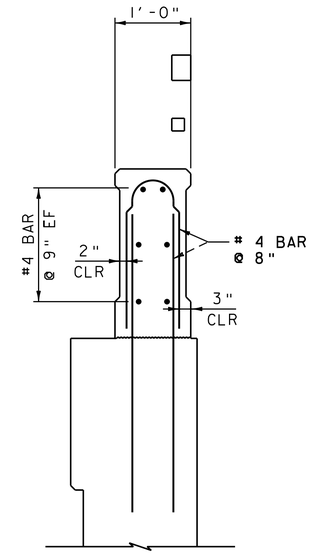

SECTION A-A
(ON WINGWALL)
SCALE 1" = 1'-0"

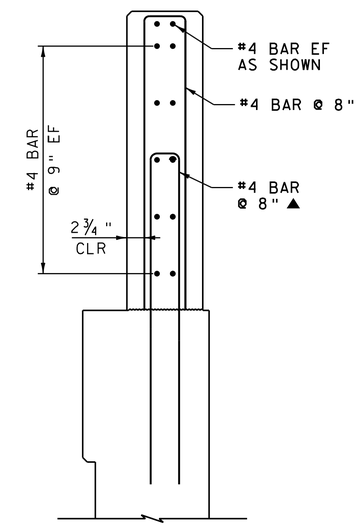

SECTION C-C
SCALE 1" = 1'-0"

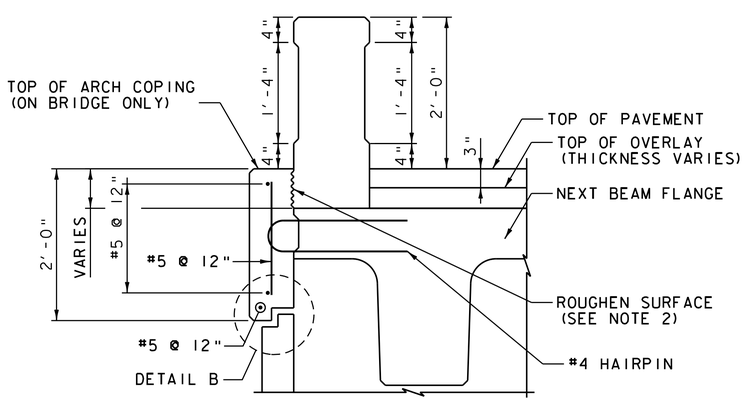

EAST RAILING
SCALE 1" = 1'-0"

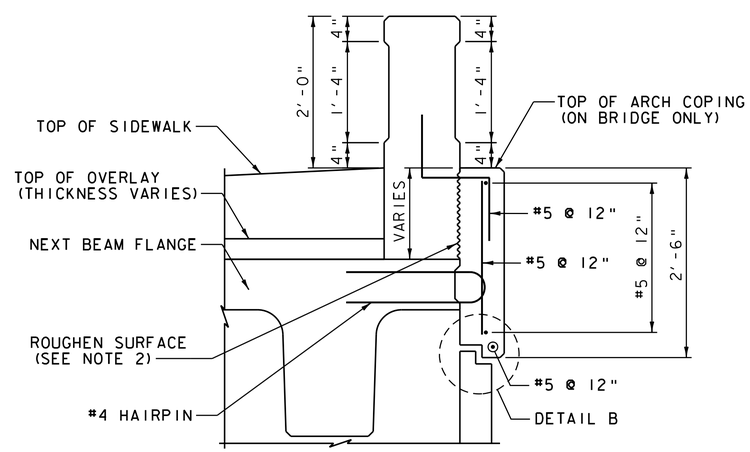

WEST RAILING
SCALE 1" = 1'-0"

NOTES

1. SEE PRECAST ARCHITECTURAL PANEL DETAILS (1 OF 2) FOR DETAIL B.
2. PORTIONS OF THE CONCRETE BRIDGE RAILING IN CONTACT WITH THE CAST-IN-PLACE COPING SHALL RECEIVE A ROUGHENED SURFACE. ALL VERTICAL SURFACES ON NEXT BEAM AND BRIDGE RAILING IN CONTACT WITH THE COPING SHALL BE COATED WITH AN APPROVED EPOXY BONDING COMPOUND IN ACCORDANCE WITH MANUFACTURER'S RECOMMENDATIONS PRIOR TO CASTING THE COPING.

PROJECT NAME: MIDDLEBURY	
PROJECT NUMBER: RS 0174(8)	
FILE NAME: z78f217brail_dt.dgn	PLOT DATE: 8/27/2013
PROJECT LEADER: G.S. GOODRICH	DRAWN BY: J.L. LEMIEUX
DESIGNED BY: K.G. KRETSCH	CHECKED BY: S.E. BURBANK
BRIDGE RAIL DETAILS (2 OF 3)	SHEET 80 OF 104

VHB 57438

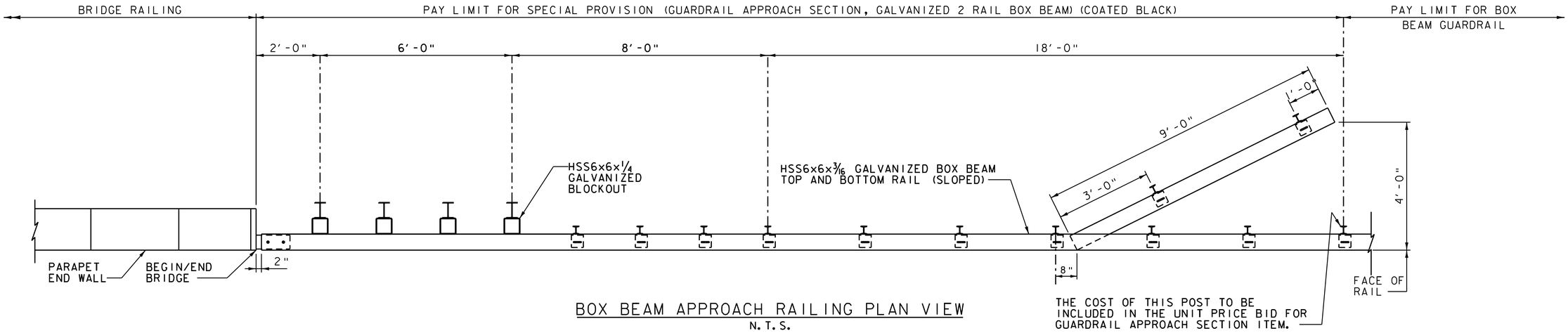

BOX BEAM APPROACH RAILING PLAN VIEW
N.T.S.

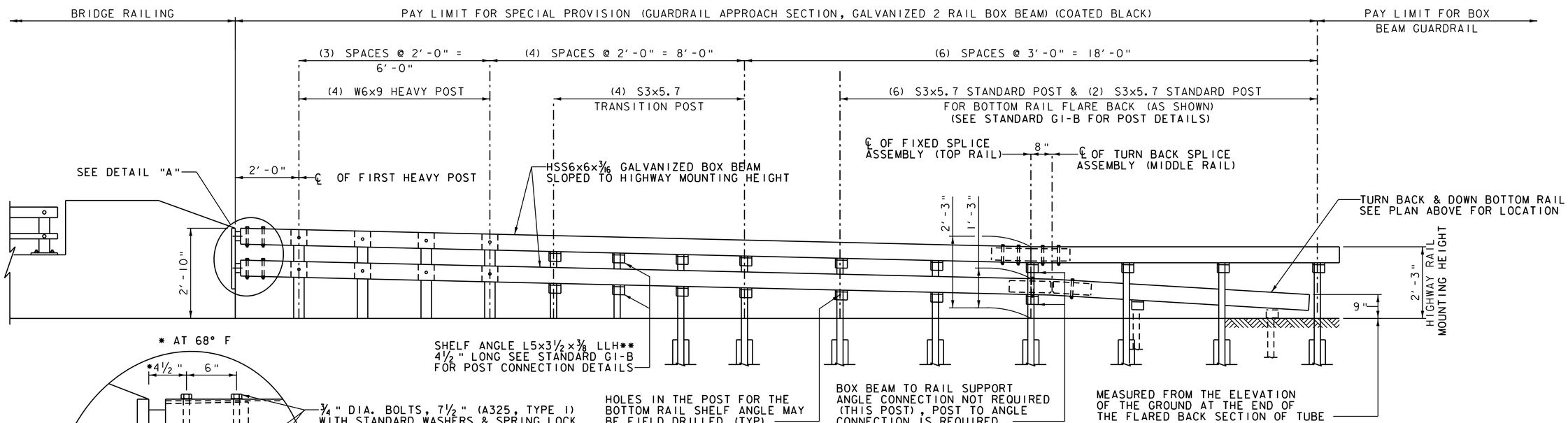

BOX BEAM APPROACH RAILING ELEVATION
N.T.S.

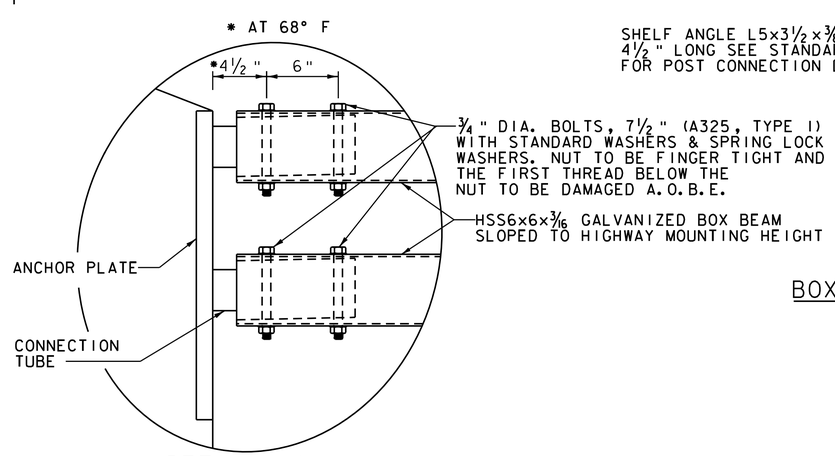

DETAIL "A"
N.T.S.

**LONG LEG HORIZONTAL

NOTES:

1. ALL STEEL COMPONENTS TO BE POWDER COATED BLACK AFTER GALVANIZING.
2. SEE BRIDGE RAIL DETAILS (1 OF 2) FOR ANCHOR PLATE AND CONNECTION TUBE DETAILS.
3. SEE STANDARD G-1B FOR RAIL POST DETAILS AND BOX BEAM RAIL DETAILS.

PROJECT NAME: MIDDLEBURY	
PROJECT NUMBER: RS 0174(8)	
FILE NAME: z78f217brail_dt.dgn	PLOT DATE: 8/27/2013
PROJECT LEADER: G.S. GOODRICH	DRAWN BY: J.L. LEMIEUX
DESIGNED BY: S.E. BURBANK	CHECKED BY: S.E. BURBANK
BRIDGE RAIL DETAILS (3 OF 3)	SHEET 81 OF 104

VHB 57438

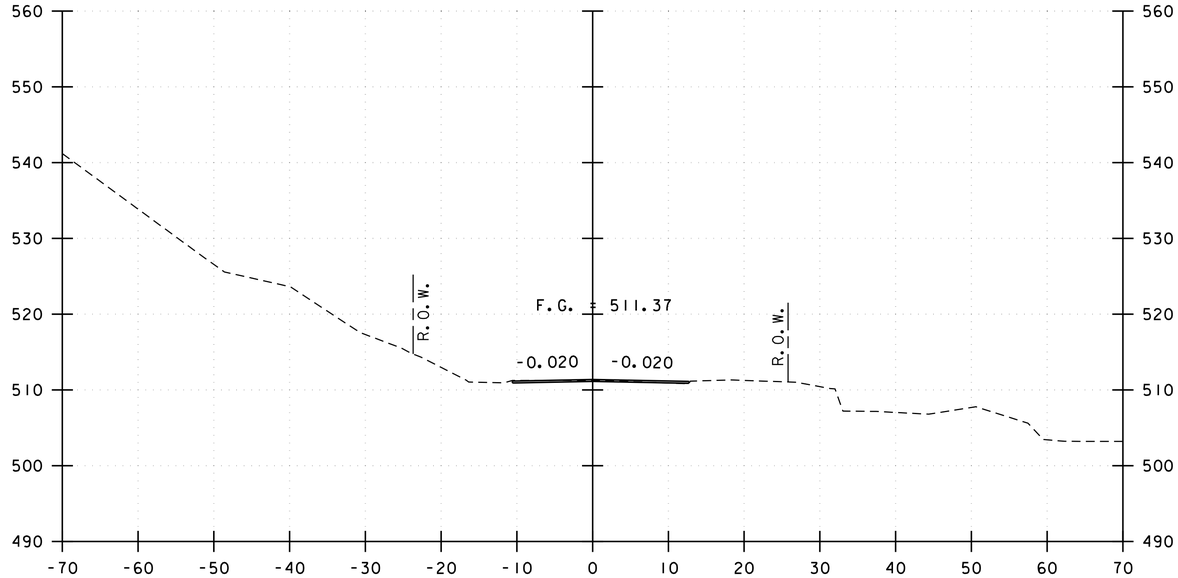

136+00

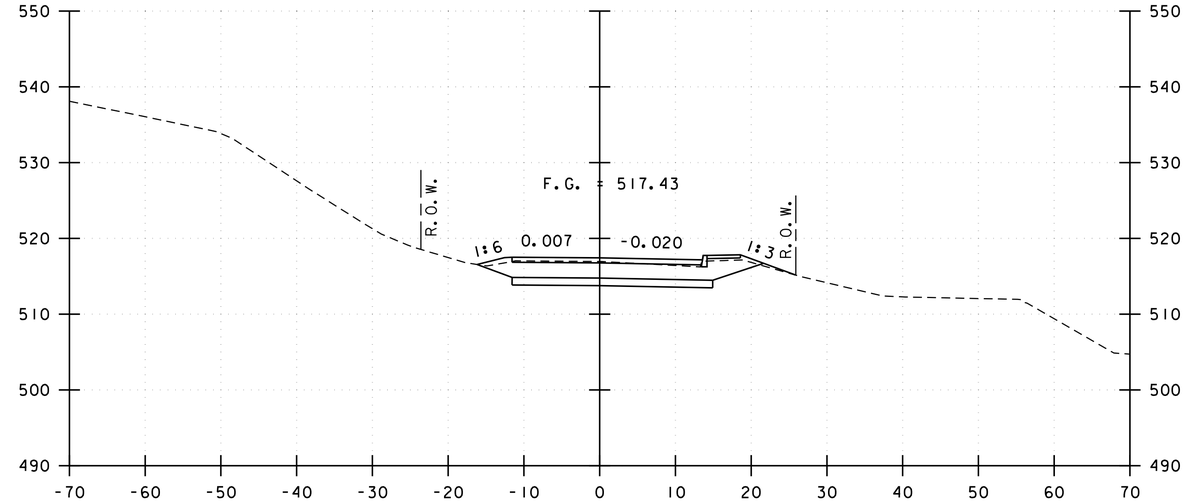

137+00

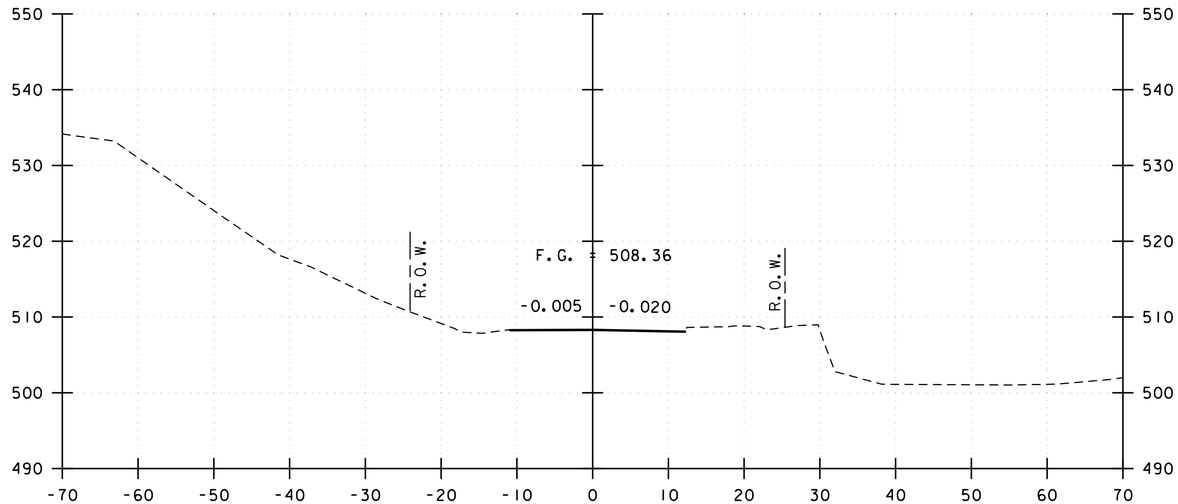

135+50
BEGIN APPROACH
STA 135+50.00

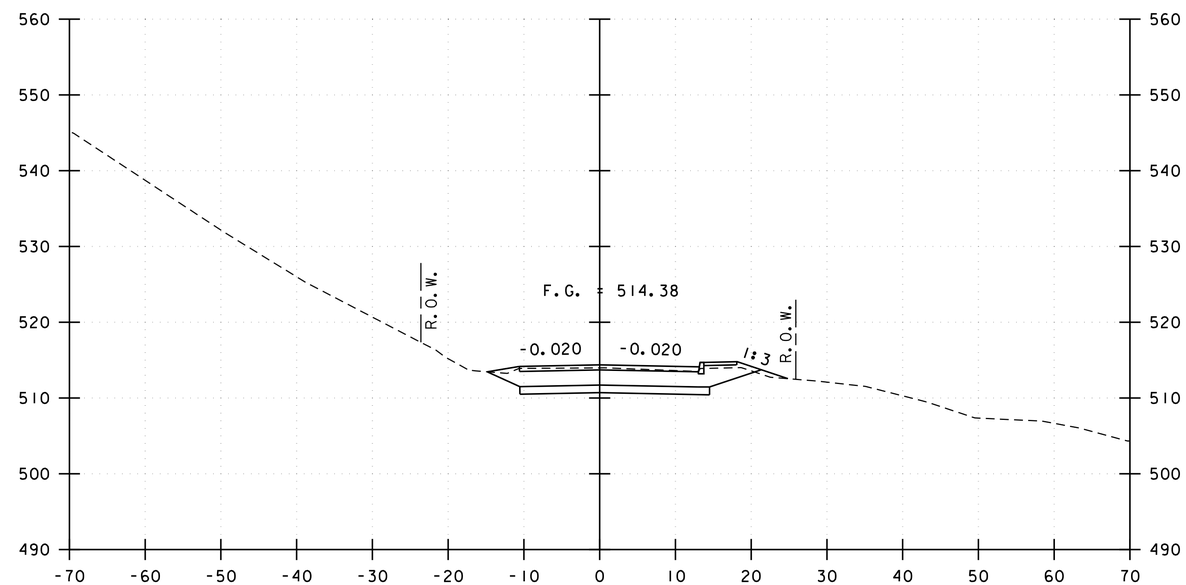

136+50
BEGIN PROJECT
STA 136+50.00

VT 125 CROSS SECTIONS

STA 135+50 TO STA 137+00

Vanasse Hangen Brustlin, Inc.

PROJECT NAME: MIDDLEBURY	
PROJECT NUMBER: RS 0174(8)	
FILE NAME: z78f217xsl.dgn	PLOT DATE: 8/27/2013
PROJECT LEADER: M.A. COLGAN	DRAWN BY: B.J. MASSE
DESIGNED BY: D.M. PECK	CHECKED BY: G.L. BAKOS
ROADWAY CROSS SECTION (1 OF 6)	SHEET 82 OF 104

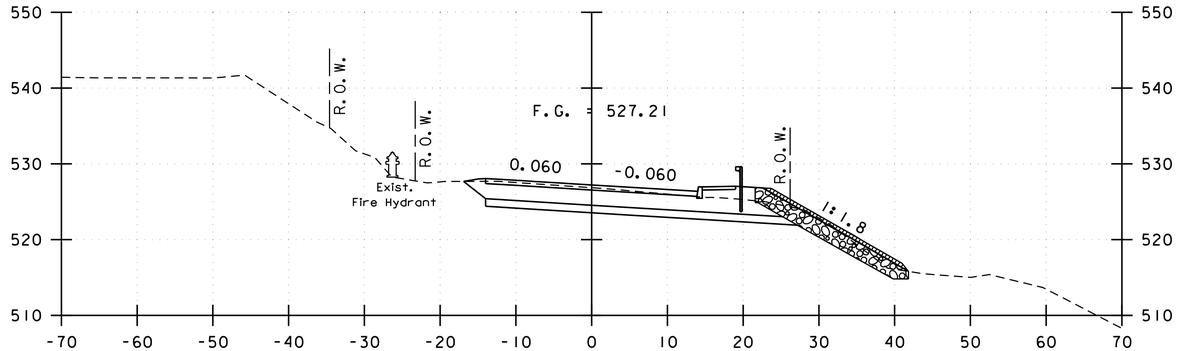

138+22

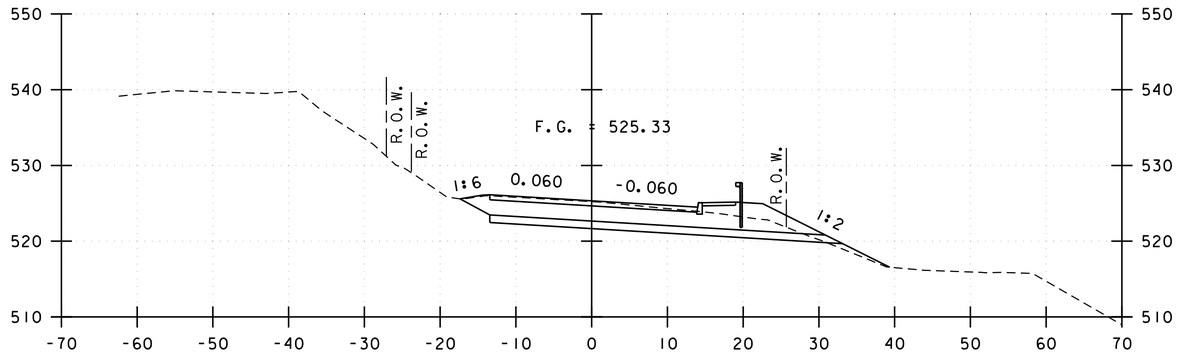

138+00

137+50

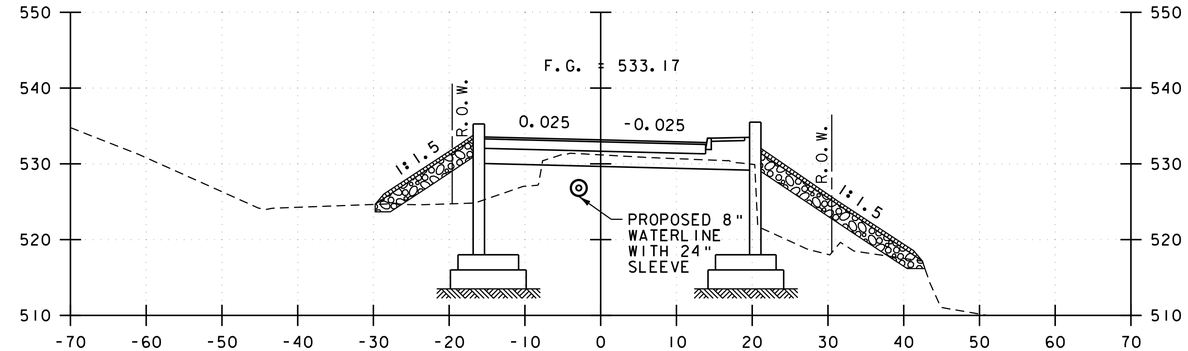

BEGIN BRIDGE
STA 139+06.75

139+00

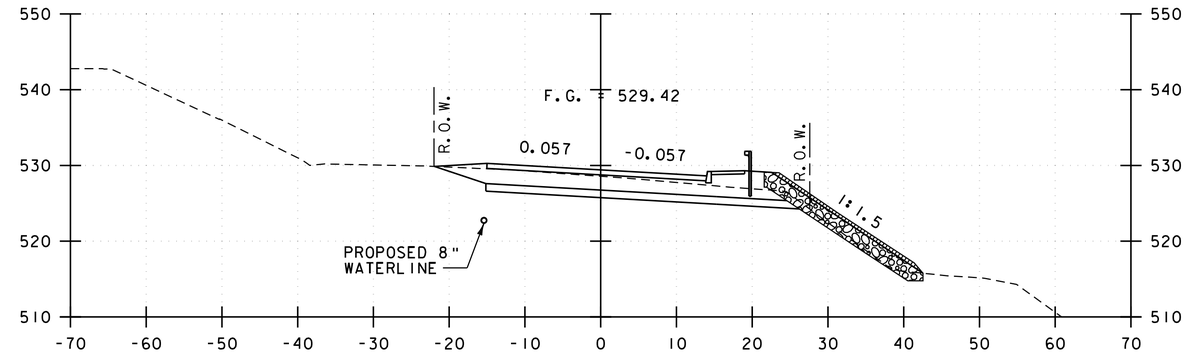

138+50

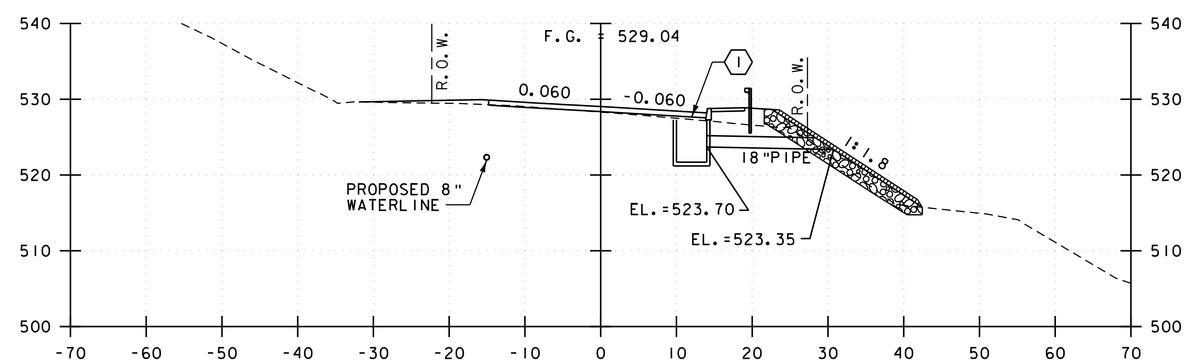

138+45

VT 125 CROSS SECTIONS

STA 137+50 TO STA 139+00

Vanasse Hangen Brustlin, Inc.

PROJECT NAME: MIDDLEBURY	
PROJECT NUMBER: RS 0174(8)	
FILE NAME: z78f217xsl.dgn	PLOT DATE: 8/27/2013
PROJECT LEADER: M.A. COLGAN	DRAWN BY: B.J. MASSE
DESIGNED BY: D.M. PECK	CHECKED BY: G.L. BAKOS
ROADWAY CROSS SECTION (2 OF 6)	SHEET 83 OF 104

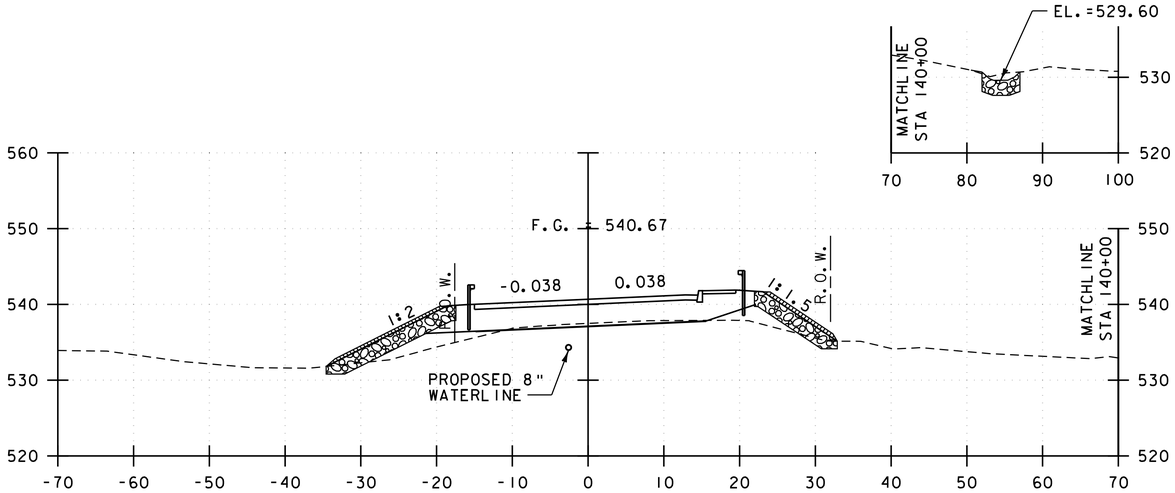

140+00
END BRIDGE
STA 139+72.75

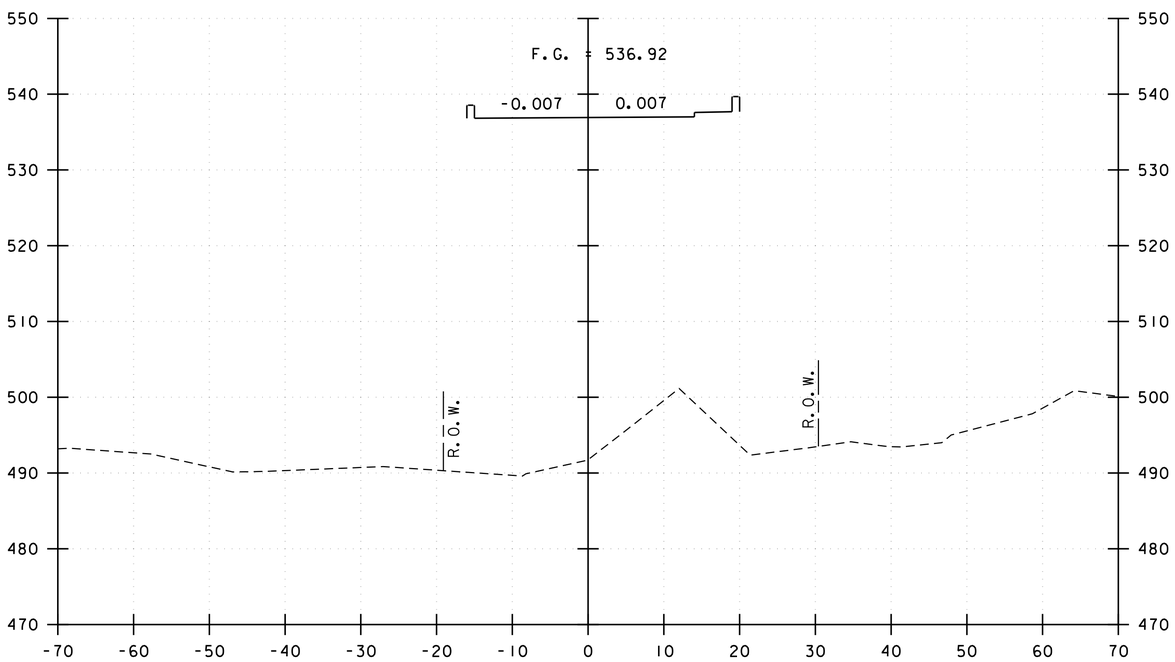

139+50

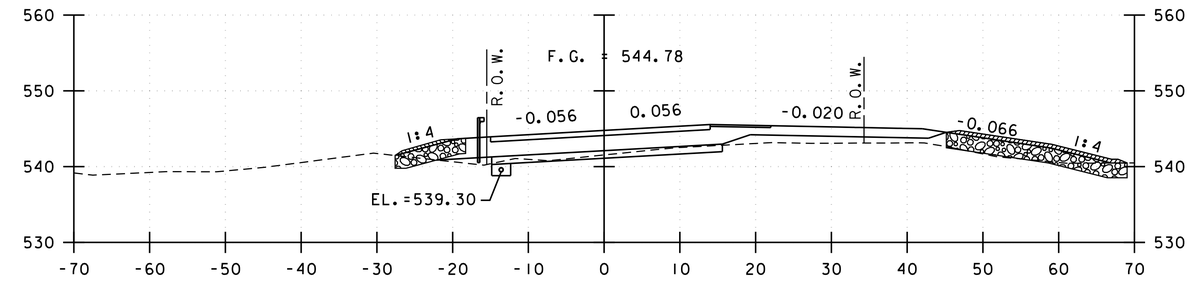

140+50

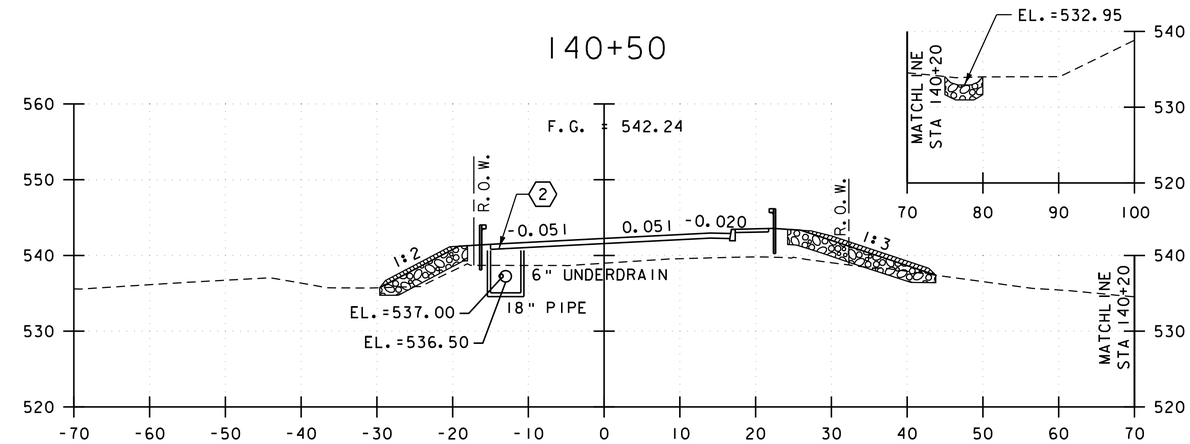

140+20

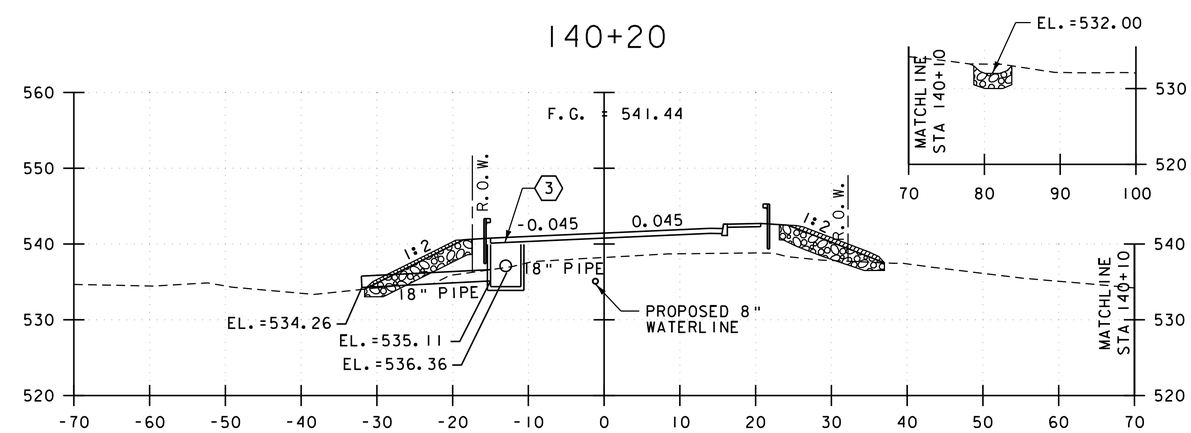

140+10

VT 125 CROSS SECTIONS

STA 139+50 TO STA 140+50

Vanasse Hangen Brustlin, Inc.

PROJECT NAME: MIDDLEBURY	
PROJECT NUMBER: RS 0174(8)	
FILE NAME: z78f217xsl.dgn	PLOT DATE: 8/27/2013
PROJECT LEADER: M.A. COLGAN	DRAWN BY: B.J. MASSE
DESIGNED BY: D.M. PECK	CHECKED BY: G.L. BAKOS
ROADWAY CROSS SECTION (3 OF 6)	SHEET 84 OF 104

VHB 57438

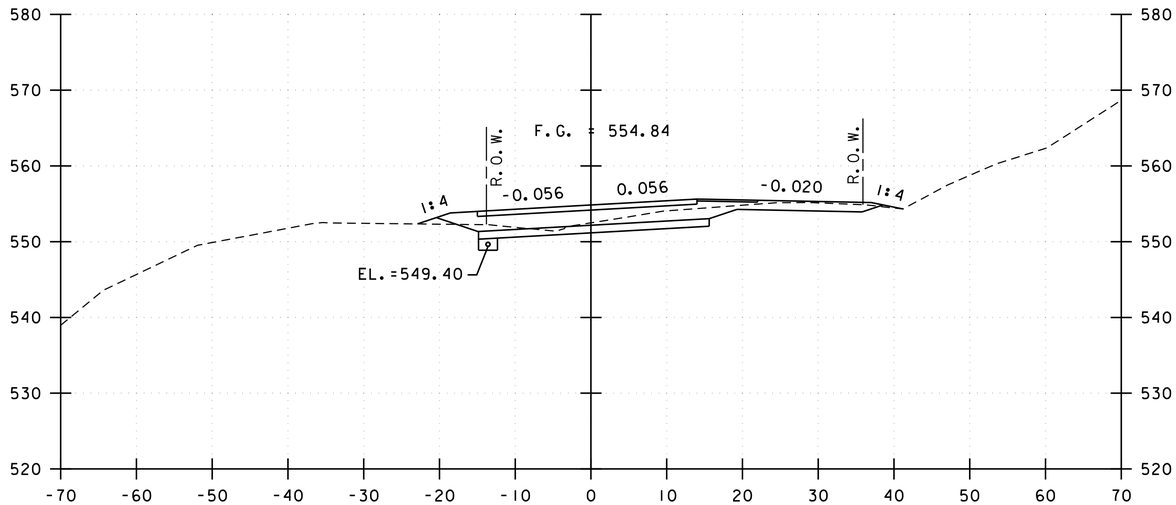

141+50

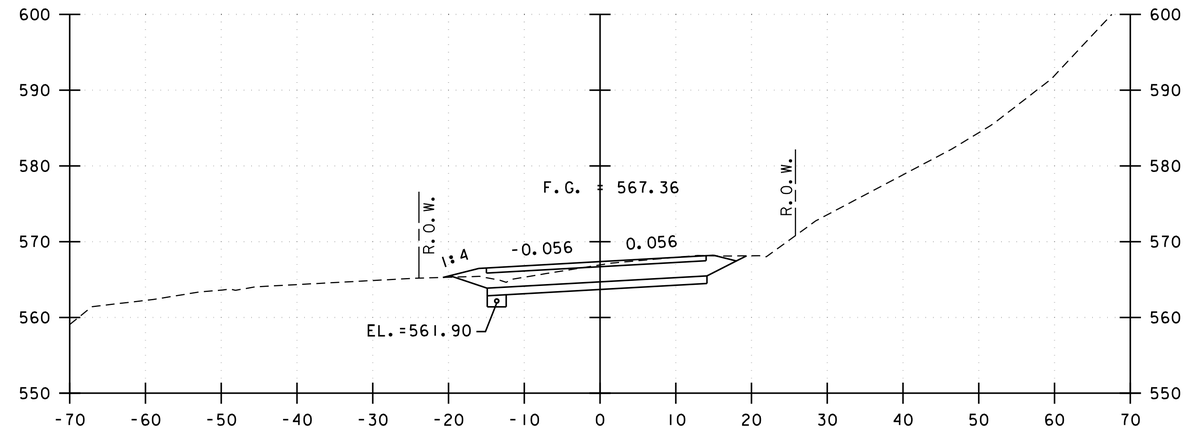

142+50

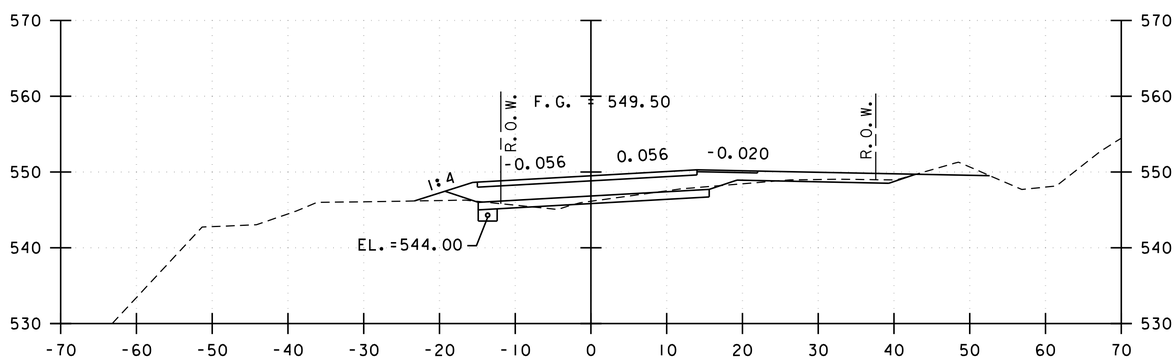

141+00

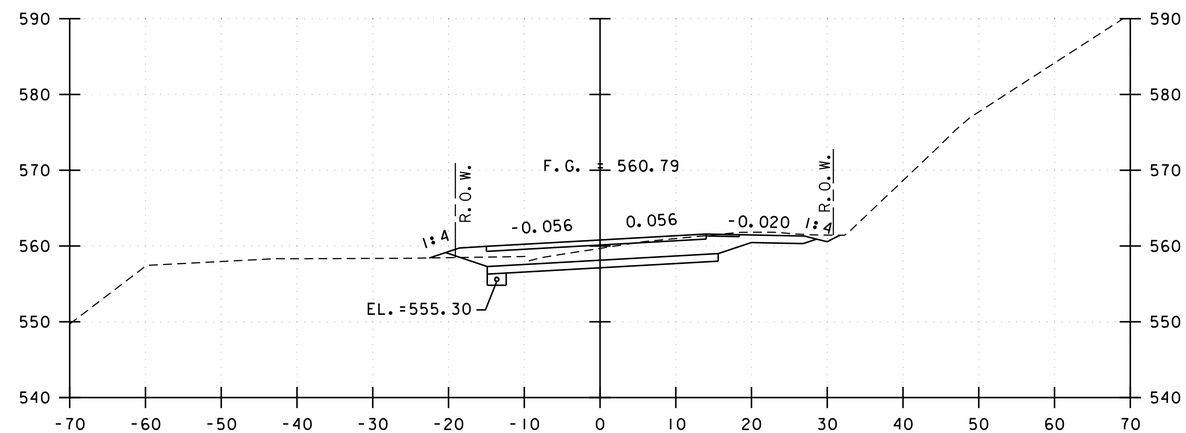

142+00

VT 125 CROSS SECTIONS

STA 141+00 TO STA 142+50

Vanasse Hangen Brustlin, Inc.

PROJECT NAME: MIDDLEBURY	
PROJECT NUMBER: RS 0174(8)	
FILE NAME: z78f217xsl.dgn	PLOT DATE: 8/27/2013
PROJECT LEADER: M.A. COLGAN	DRAWN BY: B.J. MASSE
DESIGNED BY: D.M. PECK	CHECKED BY: G.L. BAKOS
ROADWAY CROSS SECTION (4 OF 6)	SHEET 85 OF 104

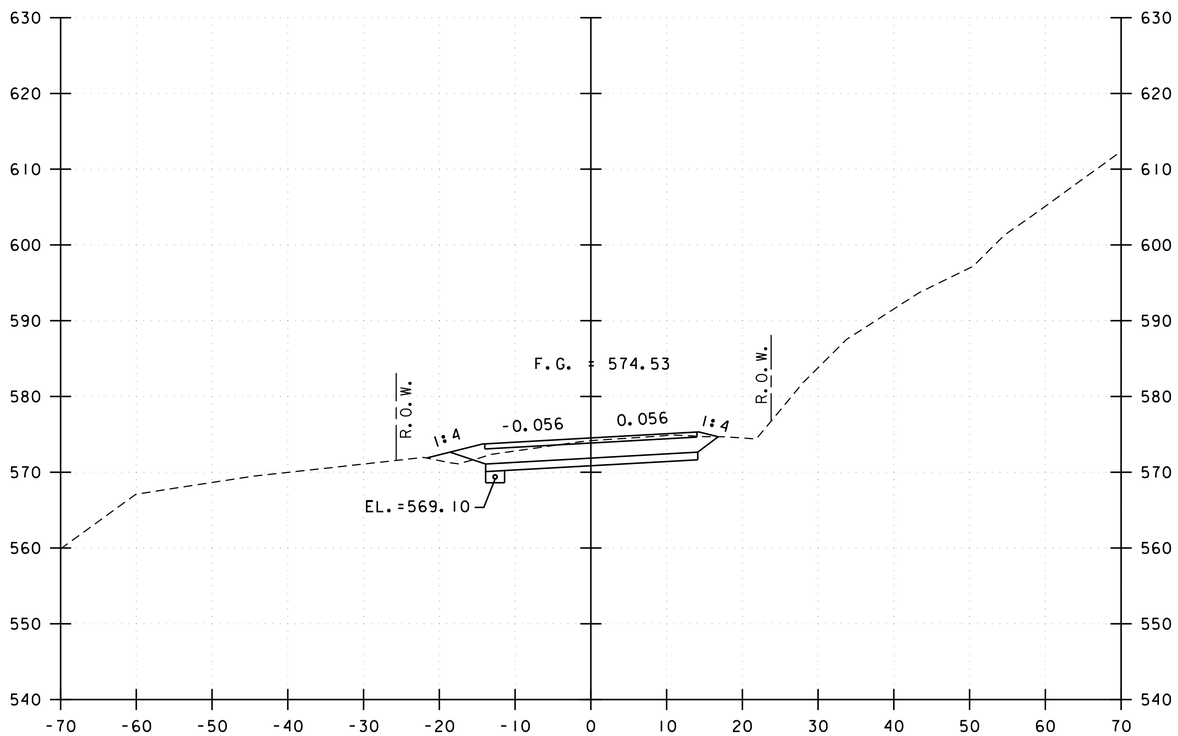

143+00

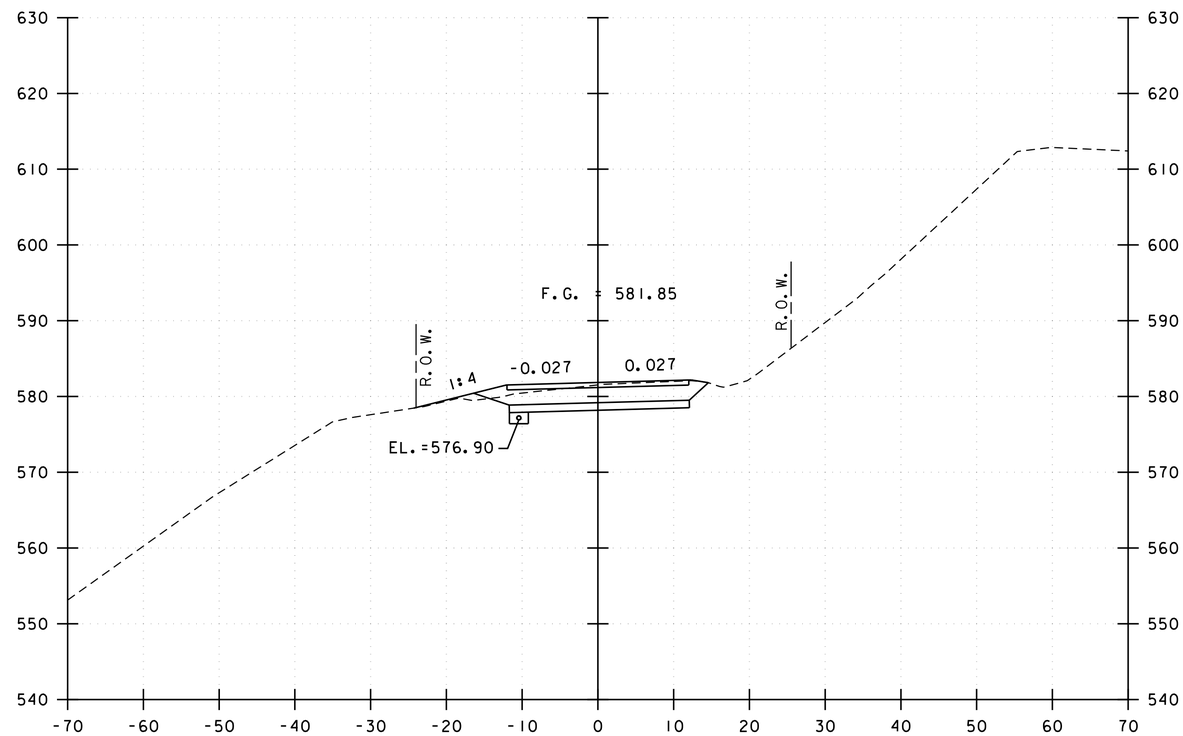

143+50
END PROJECT
STA 143+50.00

VT 125 CROSS SECTIONS

STA 143+00 TO STA 143+50

Vanasse Hangen Brustlin, Inc.

PROJECT NAME: MIDDLEBURY	
PROJECT NUMBER: RS 0174(8)	
FILE NAME: z78f217xsl.dgn	PLOT DATE: 8/27/2013
PROJECT LEADER: M.A. COLGAN	DRAWN BY: B.J. MASSE
DESIGNED BY: D.M. PECK	CHECKED BY: G.L. BAKOS
ROADWAY CROSS SECTION (5 OF 6)	SHEET 86 OF 104

VHB 57438

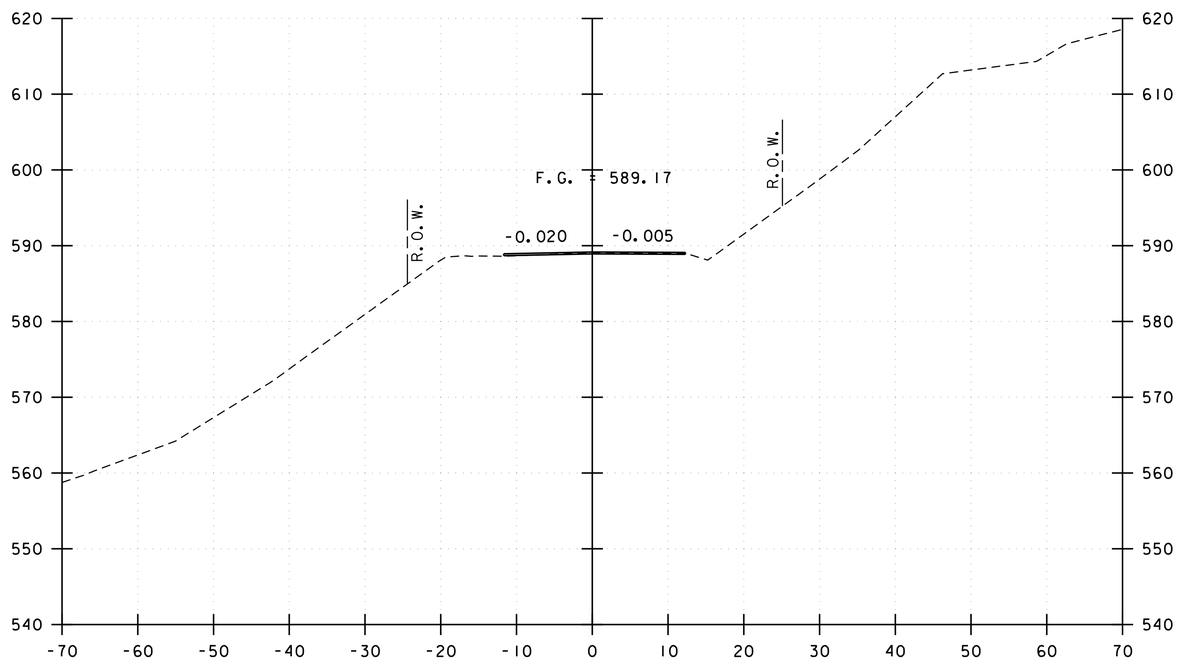

144+00

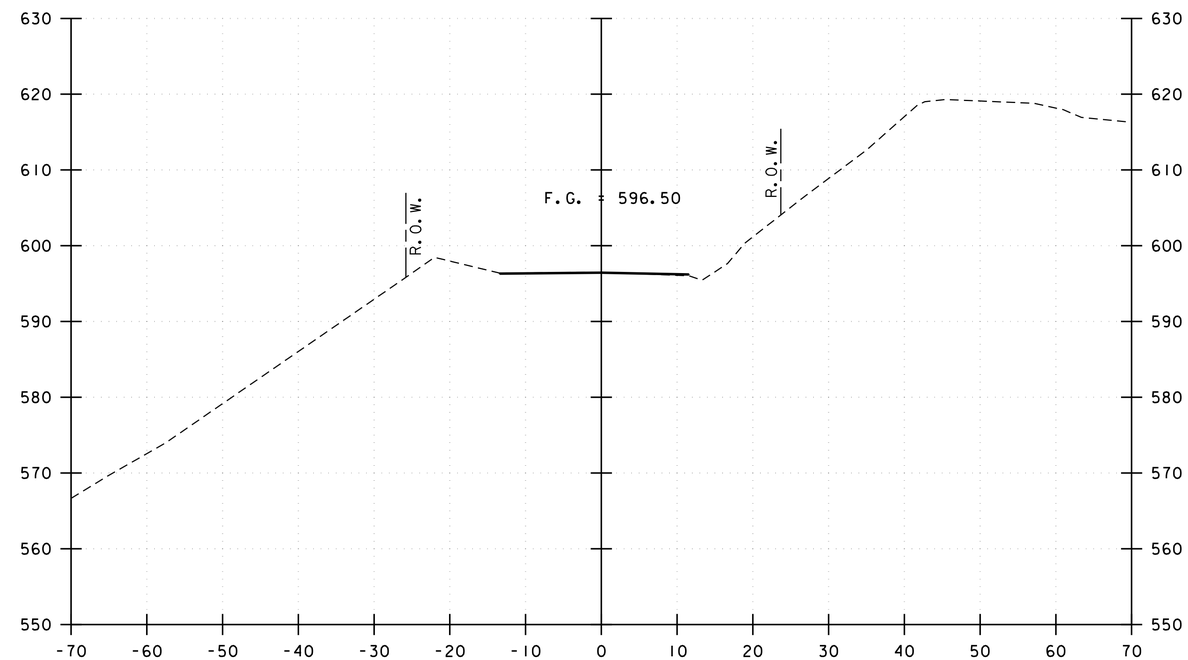

144+50
END APPROACH
STA 144+50.00

VT 125 CROSS SECTIONS

STA 144+00 TO STA 144+50

Vanasse Hangen Brustlin, Inc.

PROJECT NAME: MIDDLEBURY	
PROJECT NUMBER: RS 0174(8)	
FILE NAME: z78f217xsl.dgn	PLOT DATE: 8/27/2013
PROJECT LEADER: M.A. COLGAN	DRAWN BY: B.J. MASSE
DESIGNED BY: D.M. PECK	CHECKED BY: G.L. BAKOS
ROADWAY CROSS SECTION (6 OF 6)	SHEET 87 OF 104

VHB 57438

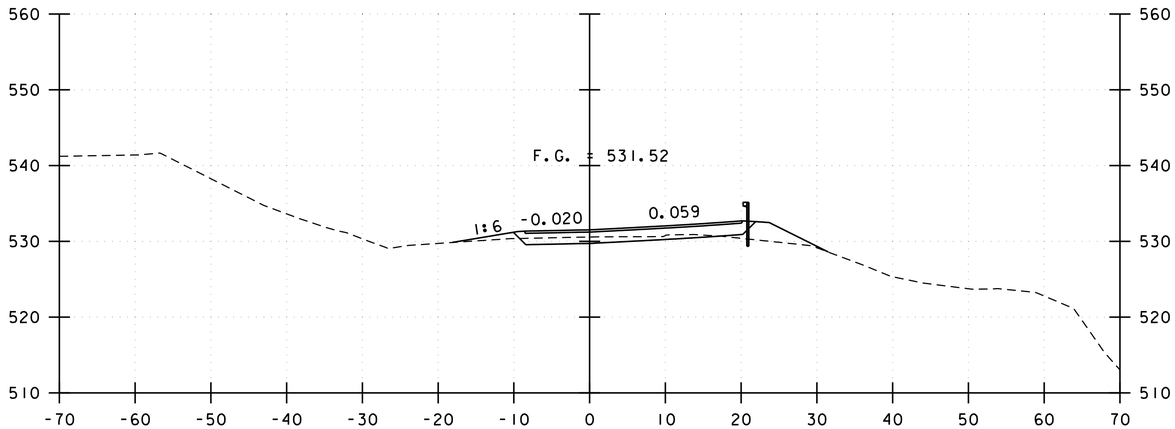

50+25

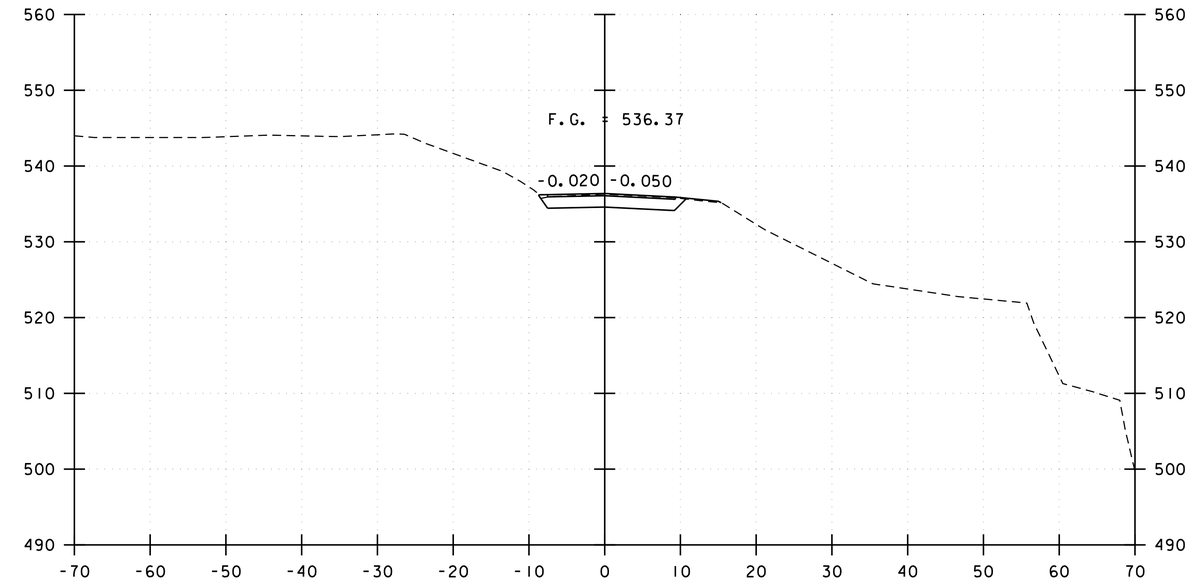

50+75

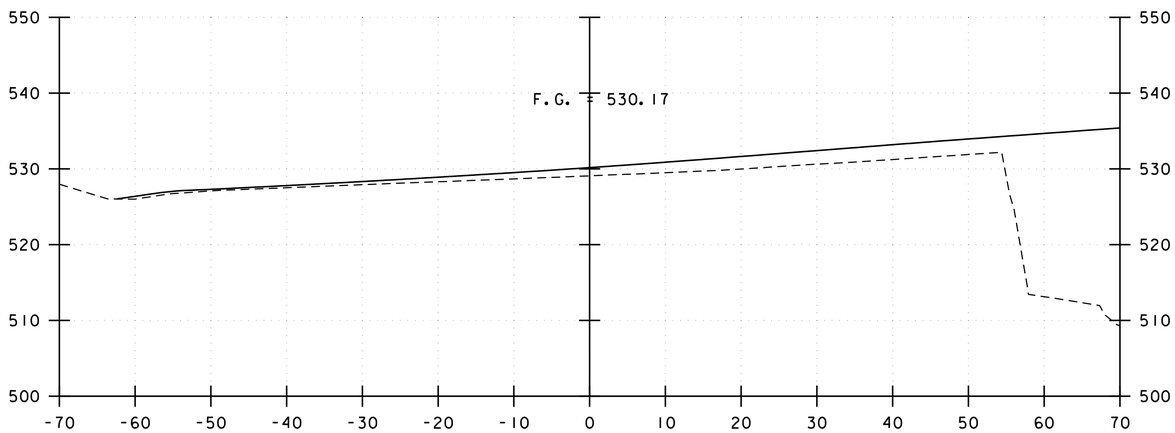

50+00

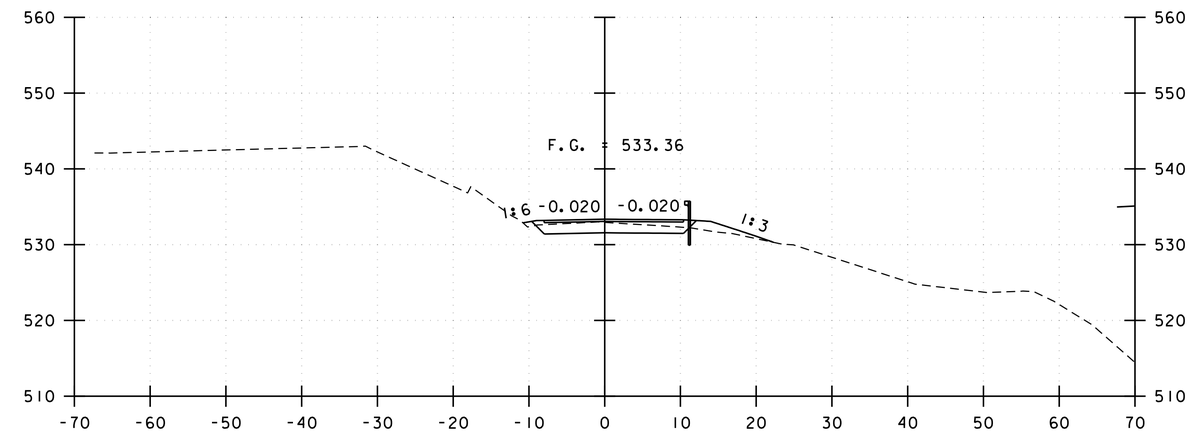

50+50

NORTH BRANCH ROAD CROSS SECTIONS

STA 50+00 TO STA 50+75

Vanasse Hangen Brustlin, Inc.

PROJECT NAME: MIDDLEBURY	
PROJECT NUMBER: RS 0174(8)	
FILE NAME: z78f217xsl.dgn	PLOT DATE: 8/27/2013
PROJECT LEADER: M.A. COLGAN	DRAWN BY: B.J. MASSE
DESIGNED BY: D.M. PECK	CHECKED BY: G.L. BAKOS
NORTH BRANCH RD CROSS SECTION (1 OF 2)	SHEET 88 OF 104

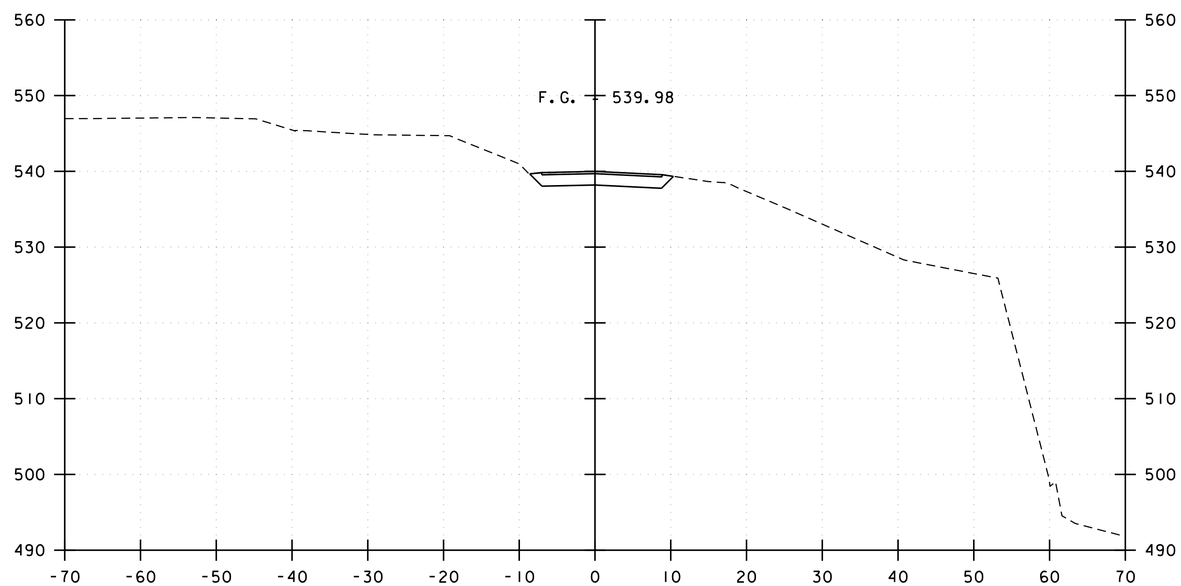

51+00

NORTH BRANCH ROAD CROSS SECTIONS

STA 51+00

Vanasse Hangen Brustlin, Inc.

PROJECT NAME: MIDDLEBURY	
PROJECT NUMBER: RS 0174(8)	
FILE NAME: z78f217xsl.dgn	PLOT DATE: 8/27/2013
PROJECT LEADER: M.A. COLGAN	DRAWN BY: B.J. MASSE
DESIGNED BY: D.M. PECK	CHECKED BY: G.L. BAKOS
NORTH BRANCH RD CROSS SECTION (2 OF 2)	SHEET 89 OF 104

VHB 57438

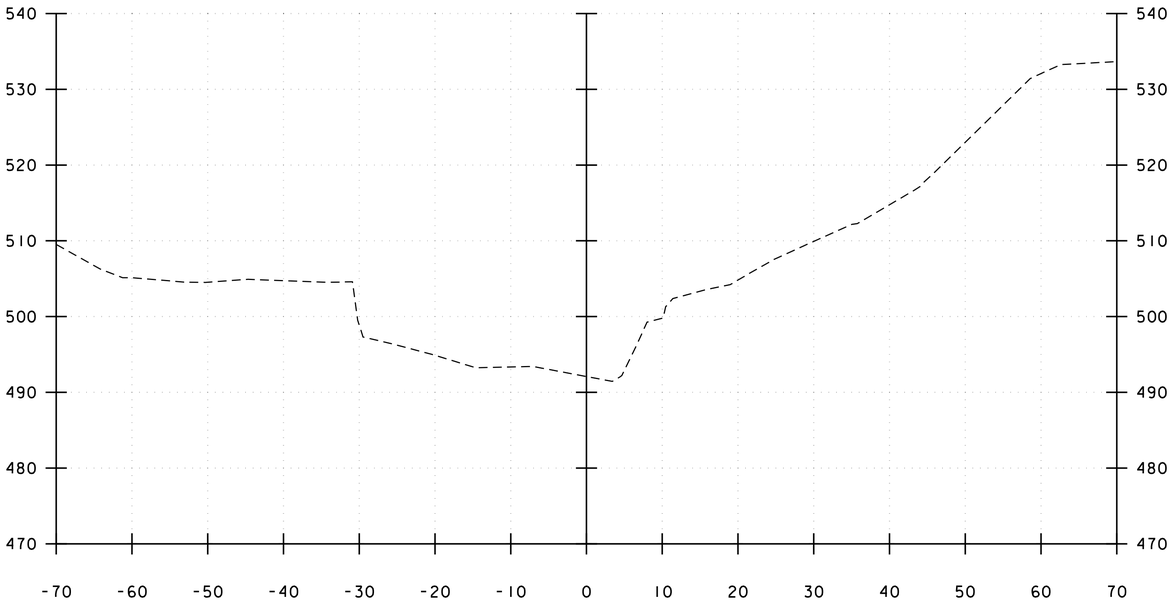

10+25

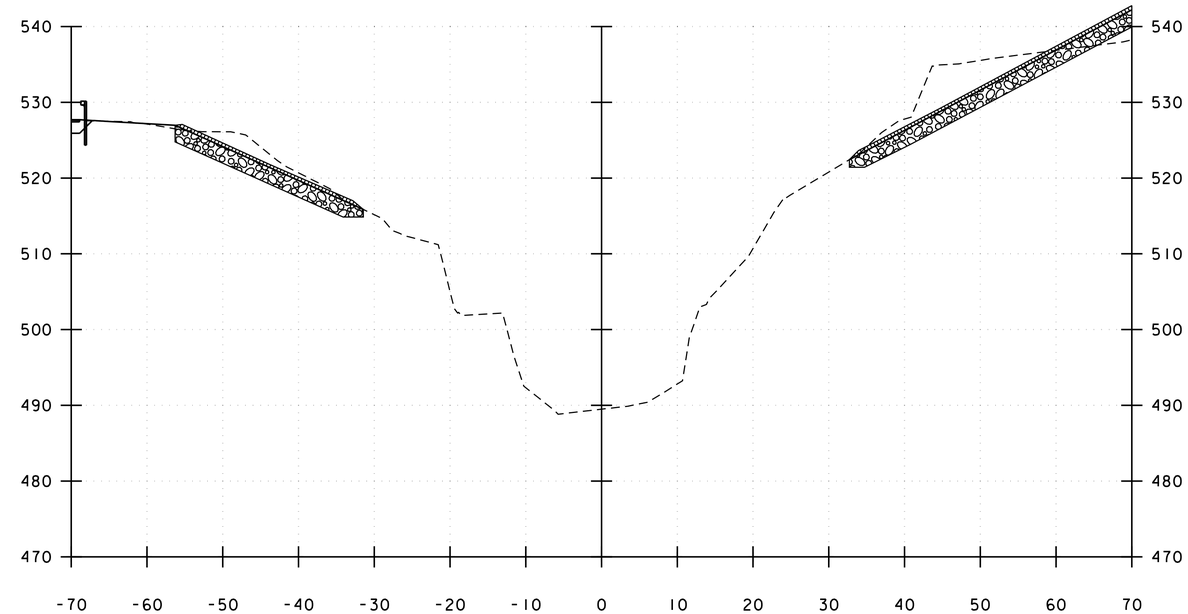

STA 10+11, RT
BEGIN COMMON EXCAVATION FOR STONE FILL
GEOTEXTILE UNDER STONE FILL
STONE FILL, TYPE II
GRUBBING MATERIAL

10+75

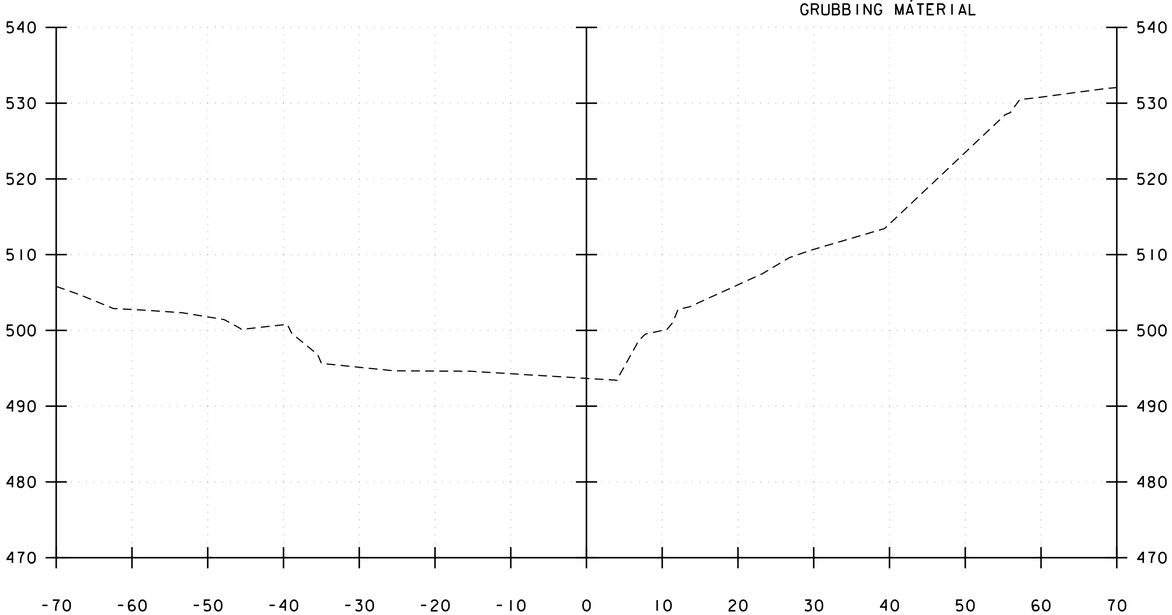

10+00

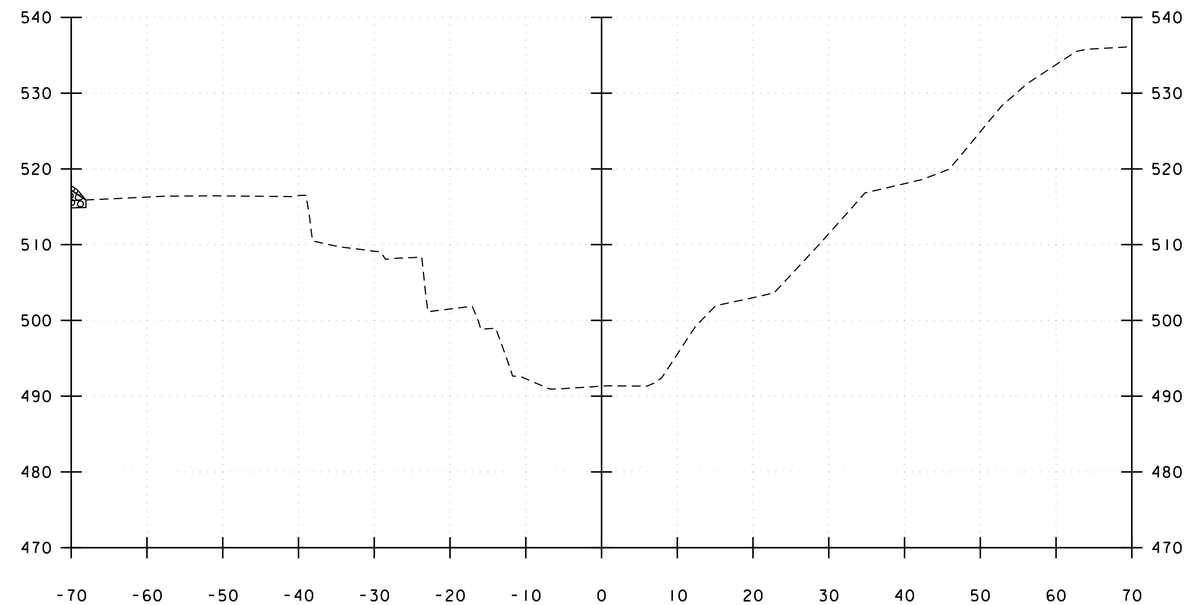

STA 10+33, LT
BEGIN COMMON EXCAVATION FOR STONE FILL
GEOTEXTILE UNDER STONE FILL
STONE FILL, TYPE II
GRUBBING MATERIAL

10+50

CHANNEL CROSS SECTIONS

STA 10+00 TO STA 10+75

Vanasse Hangen Brustlin, Inc.

PROJECT NAME: MIDDLEBURY	
PROJECT NUMBER: RS 0174(8)	
FILE NAME: z78f217xsc.dgn	PLOT DATE: 8/27/2013
PROJECT LEADER: M.A. COLGAN	DRAWN BY: B.J. MASSE
DESIGNED BY: D.M. PECK	CHECKED BY: G.L. BAKOS
CHANNEL CROSS SECTION (1OF 3)	SHEET 90 OF 104

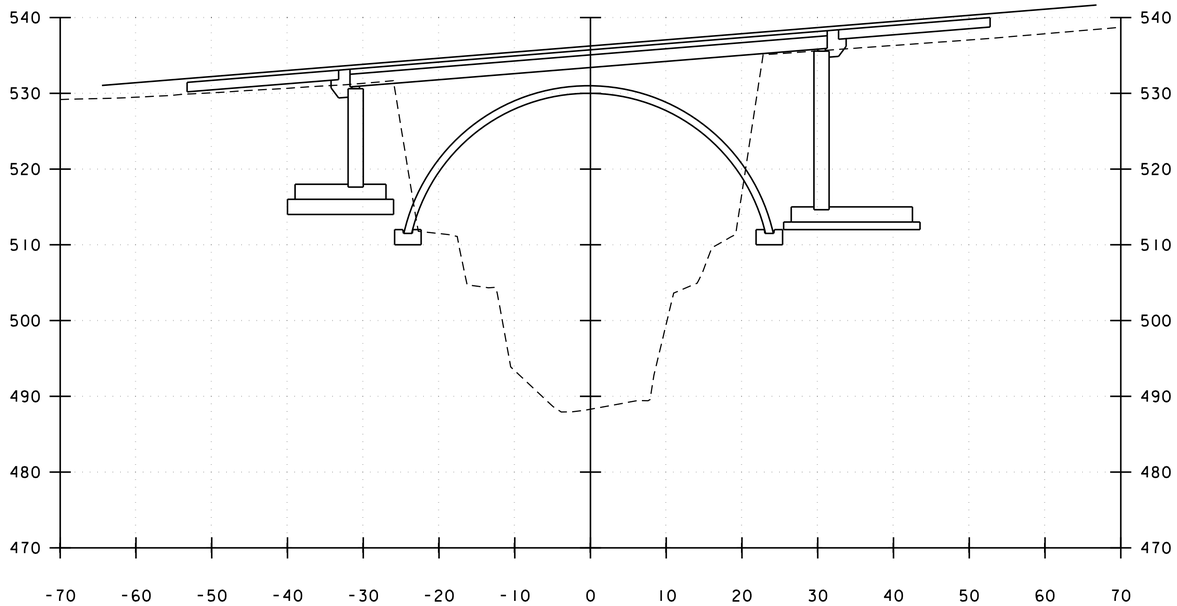

10+90

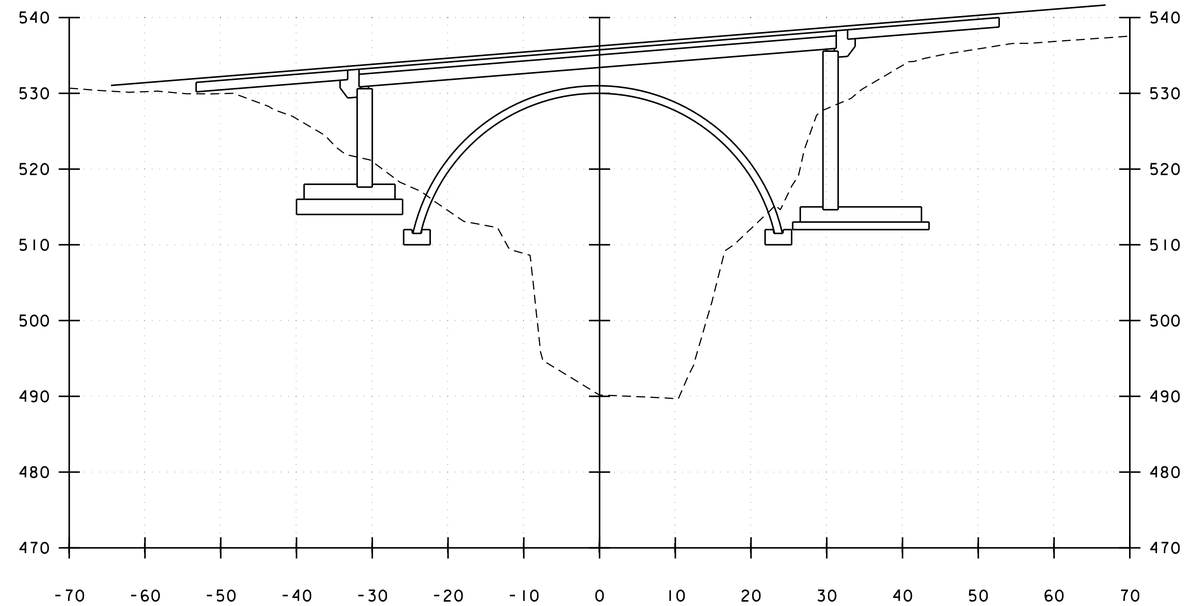

11+10

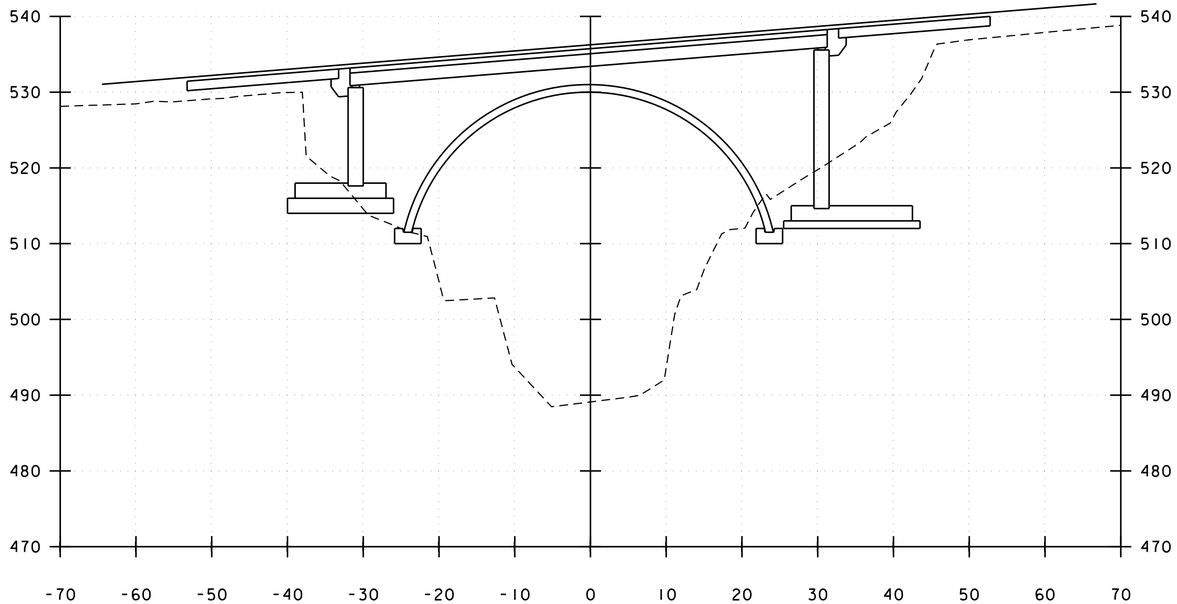

STA 10+79, LT
END COMMON EXCAVATION FOR STONE FILL
GEOTEXTILE UNDER STONE FILL
STONE FILL, TYPE II
GRUBBING MATERIAL

10+80

STA 10+79, RT
END COMMON EXCAVATION FOR STONE FILL
GEOTEXTILE UNDER STONE FILL
STONE FILL, TYPE II
GRUBBING MATERIAL

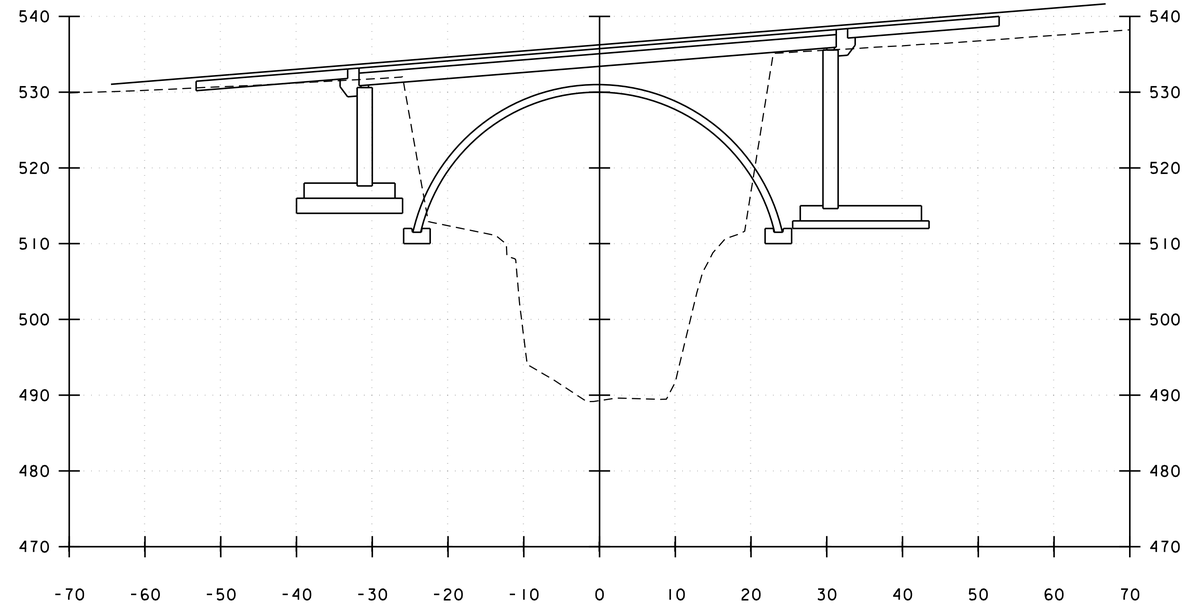

11+00

CHANNEL CROSS SECTIONS

STA 10+80 TO STA 11+10

VHB Vanasse Hangen Brustlin, Inc.

PROJECT NAME: MIDDLEBURY	
PROJECT NUMBER: RS 0174(8)	
FILE NAME: z78f217xsc.dgn	PLOT DATE: 8/27/2013
PROJECT LEADER: M.A. COLGAN	DRAWN BY: B.J. MASSE
DESIGNED BY: D.M. PECK	CHECKED BY: G.L. BAKOS
CHANNEL CROSS SECTION (2 OF 3)	SHEET 91 OF 104

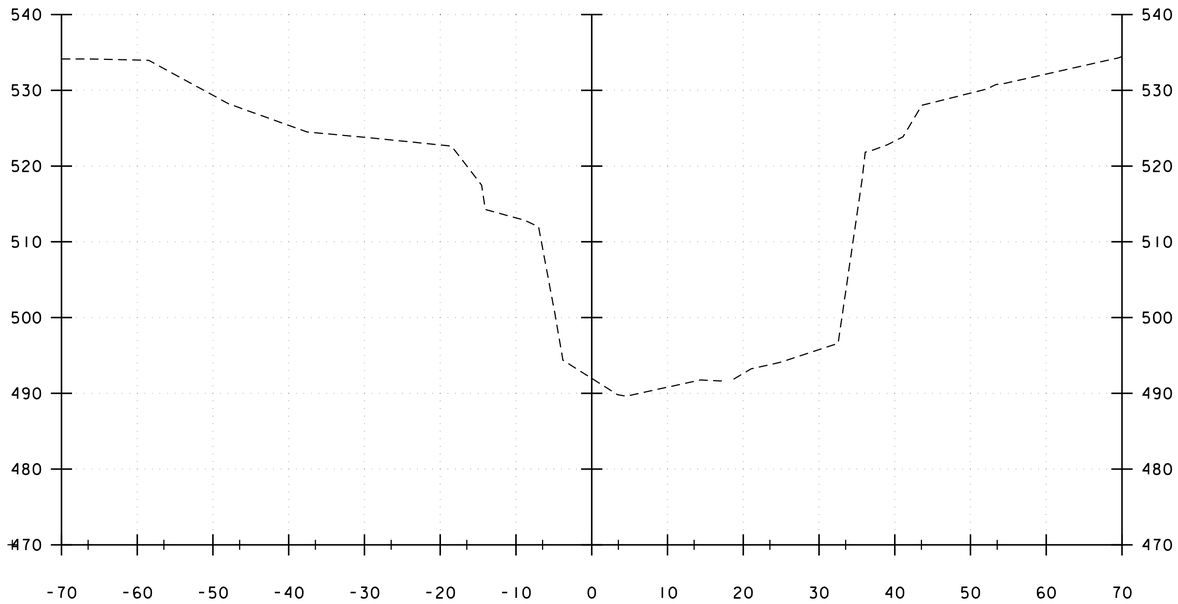

STA 11+32, LT
END COMMON EXCAVATION FOR STONE FILL
GEOTEXTILE UNDER STONE FILL
STONE FILL, TYPE II
GRUBBING MATERIAL

11+50

STA 11+37, RT
END COMMON EXCAVATION FOR STONE FILL
GEOTEXTILE UNDER STONE FILL
STONE FILL, TYPE II
GRUBBING MATERIAL

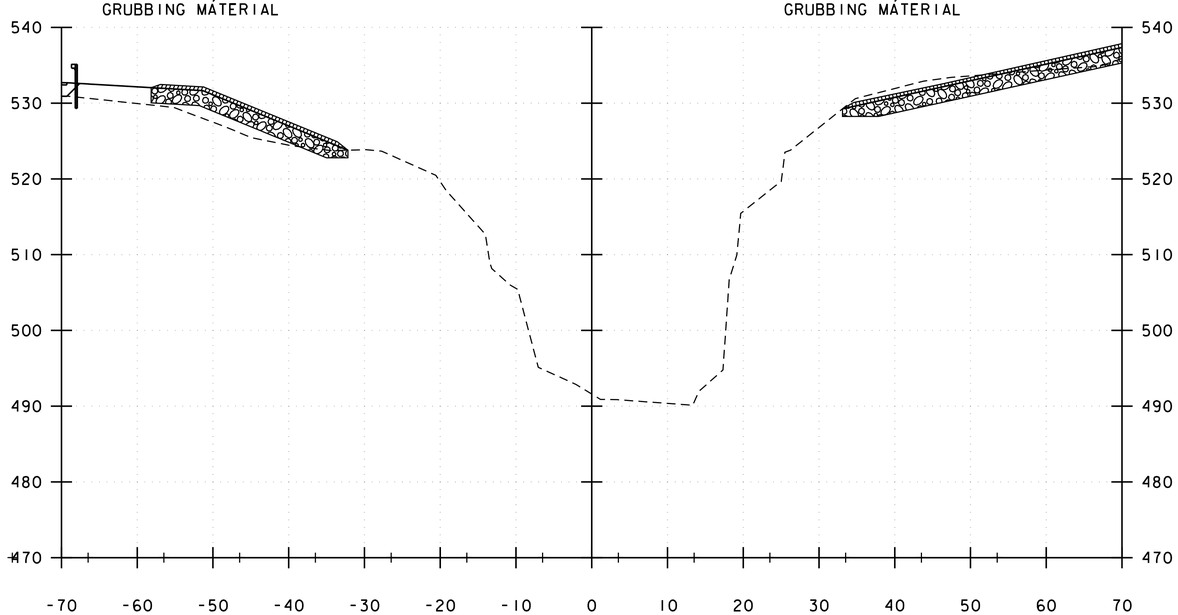

STA 11+16, LT
BEGIN COMMON EXCAVATION FOR STONE FILL
GEOTEXTILE UNDER STONE FILL
STONE FILL, TYPE II
GRUBBING MATERIAL

11+25

STA 11+16, RT
BEGIN COMMON EXCAVATION FOR STONE FILL
GEOTEXTILE UNDER STONE FILL
STONE FILL, TYPE II
GRUBBING MATERIAL

CHANNEL CROSS SECTIONS

STA 11+25 TO STA 11+50

Vanasse Hangen Brustlin, Inc.

PROJECT NAME: MIDDLEBURY	
PROJECT NUMBER: RS 0174(8)	
FILE NAME: z78f217xsc.dgn	PLOT DATE: 8/27/2013
PROJECT LEADER: M.A. COLGAN	DRAWN BY: B.J. MASSE
DESIGNED BY: D.M. PECK	CHECKED BY: G.L. BAKOS
CHANNEL CROSS SECTION (3 OF 3)	SHEET 92 OF 104

EPSC PLAN NARRATIVE

1.1 PROJECT DESCRIPTION

THIS PROJECT INVOLVES THE REMOVAL AND REPLACEMENT OF THE EXISTING FILLED CONCRETE ARCH AND WINGWALLS AND ASSOCIATED APPROACH WORK. DURING CONSTRUCTION, THE BRIDGE WILL BE CLOSED AND TRAFFIC WILL BE DETOURED AROUND THE PROJECT SITE. THIS PROJECT IS LOCATED ON ROUTE 125 APPROXIMATELY 1.6 MILES EAST OF ROUTE 7 OVER MIDDLEBURY RIVER IN THE TOWN OF EAST MIDDLEBURY. THE EXISTING ARCH IS APPROXIMATELY 42 FEET LONG AND APPROXIMATELY 25 FEET FROM FASCIA TO FASCIA.

THE BRIDGE REPLACEMENT INCLUDES THE REMOVAL OF THE EXISTING STRUCTURE IN ITS ENTIRETY AND THE CONSTRUCTION OF A NEW 61.5 FOOT SINGLE SPAN PRECAST NEXT BEAM BRIDGE OVER A NEW 48 FOOT PRECAST ARCH. THE NEW STRUCTURE WILL BE APPROXIMATELY 36 FEET FROM FASCIA TO FASCIA. NEW PRECAST CONCRETE FOOTINGS, ABUTMENTS, AND WINGWALLS WILL BE CONSTRUCTED TO SUPPORT THE NEW SUPERSTRUCTURE. THE ASSOCIATED APPROACH WORK INCLUDES APPROACH SLABS, AND APPROXIMATELY 600 FEET OF RECONSTRUCTED ROADWAY AND NEW BRIDGE APPROACH RAIL. ONCE THE BRIDGE IS COMPLETED THE ROADWAY WILL BE RESTORED TO THE PREVIOUS CONDITIONS.

NOTE: AREA OF DISTURBANCE INCLUDES LIMITS OF EARTH DISTURBANCE WITHIN THE PROJECT AREA, AS WELL AS WASTE, BORROW AND STAGING AREAS, AND OTHER EARTH DISTURBING ACTIVITIES WITHIN OR DIRECTLY ADJACENT TO THE PROJECT LIMITS AS SHOWN ON THE ATTACHED EPSC PLAN.

TOTAL AREA OF DISTURBANCE AS SHOWN ON THE ATTACHED EPSC PLAN IS APPROXIMATELY 0.94 ACRES.

IT IS ANTICIPATED THAT THIS PROJECT WILL LAST ONE CONSTRUCTION SEASON.

1.2 SITE INVENTORY

1.2.1 TOPOGRAPHY

THE TOPOGRAPHY OF THE AREA IS STEEP WOODED BANKS ASCENDING FROM THE MIDDLEBURY RIVER TO ROLLING HILLS MOSTLY COVERED BY FOREST WITH OCCASIONAL OPEN AREAS. VT ROUTE 125 AND NORTH BRANCH ROAD ARE WITHIN THE PROJECT SITE. THERE ARE RESIDENCES TO THE NORTH AND WEST OF THE PROJECT SITE ALONG NORTH BRANCH ROAD AND ROUTE 125 WITH A TREE BUFFER.

1.2.2 DRAINAGE, WATERWAYS, BODIES OF WATER, AND PROXIMITY TO NATURAL OR MAN-MADE WATER FEATURES

THE MIDDLEBURY RIVER IS THE ONLY WATER SOURCE ON THE PROJECT SITE. THE RIVER IS CLASSIFIED AS WIDE AND CURVING WITH A BEND UPSTREAM OF THE PROJECT SITE AND A MODERATE CURRENT. THE RIVER BED CONSISTS OF GRAVEL, COBBLES, BOULDERS AND LEDGE. THE TRIBUTARY AREA AT THE BRIDGE CROSSING IS APPROXIMATELY 44.44 SQ. MILES. THERE IS ONE CULVERT WITHIN THE PROJECT AREA. THERE IS A 15" CMP CULVERT BENEATH ROUTE 125. THIS CULVERT COLLECTS RUNOFF FROM AN AREA TO THE EAST OF THE PROJECT AREA, SOUTH OF ROUTE 125 AND DAYLIGHTS ON THE NORTH SIDE OF ROUTE 125 AND DRAINS TO THE RIVER DOWN A HEAVILY WOODED EMBANKMENT.

1.2.3 VEGETATION

THE VEGETATION IN THE PROJECT AREA CONSISTS OF HARDWOOD AND SOFTWOOD TREES AND UNDERGROWTH. THE IMPACT TO VEGETATION WILL BE LIMITED TO THAT WHICH IS DIRECTLY AFFECTED BY REPLACEMENT OF THE EXISTING BRIDGE AND THE RECONSTRUCTION OF THE APPROACH ROADWAY. DISTURBED VEGETATION WILL BE REESTABLISHED WITH STANDARD SEED AND MULCH PRACTICES PER THE EPSC PLAN, EXCEPT ON THE SIDE SLOPES OF THE NORTH APPROACHES WHERE DUE TO THE STEEPNESS OF THE SIDE SLOPES STONE FILL, TYPE II WILL BE USED FOR SLOPE STABILIZATION.

1.2.4 SOILS

ALL SOIL DATA CAME FROM THE U.S. DEPARTMENT OF AGRICULTURE SOIL CONSERVATION SERVICE FOR THE COUNTY OF ORANGE, VERMONT. SOILS ON THE PROJECT SITE ARE:

BERKSHIRE AND MARLOW EXTREMELY STONY LOAM (BsC), 3% TO 20% SLOPES, "K FACTOR" = 0.20, CLASSIFIED LOW EROSION POTENTIAL, NORTHERN HALF AND SOUTHERN EXTENT OF PROJECT SITE

STETSON GRAVELLY FINE SANDY LOAM (StA), 0% TO 5% SLOPES, "K FACTOR" = 0.10, CLASSIFIED LOW EROSION POTENTIAL, NORTHERN EXTENT OF PROJECT SITE

COLTON GRAVELLY SANDY LOAM (CtA), 0% TO 5% SLOPES, "K FACTOR" = 0.20, CLASSIFIED LOW EROSION POTENTIAL, WESTERN EXTENT OF PROJECT SITE

COLTON GRAVELLY SANDY LOAM (CtE), 30% TO 50% SLOPES, "K FACTOR" = 0.20, CLASSIFIED LOW EROSION POTENTIAL, SOUTHERN HALF AND EASTERN EXTENT OF PROJECT SITE

NOTE: K-VALUES GENERALLY INDICATE THE FOLLOWING:
0.0-0.23 = LOW EROSION POTENTIAL
0.24-0.36 = MODERATE EROSION POTENTIAL
0.37 AND HIGHER = HIGH EROSION POTENTIAL

1.2.5 SENSITIVE RESOURCE AREAS

CRITICAL HABITATS: NO
HISTORICAL OR ARCHEOLOGICAL AREAS: YES
ITEM 653.50, "BARRIER FENCE" WILL BE PLACED ALONG THE PROJECT LIMITS OUTSIDE THE ARCHAEOLOGY SITE ON THE NORTHWEST QUAD TO PROTECT THE KNOWN ARCHAEOLOGICAL SITE KNOWN AS THE EAST MIDDLEBURY IRON WORKS SITE (VT-AD-299) DURING CONSTRUCTION.
PRIME AGRICULTURAL LAND: NO
THREATENED AND ENDANGERED SPECIES: NO
WATER RESOURCE: MIDDLEBURY RIVER
WETLANDS: NO

1.3 RISK EVALUATION

WITH <1 ACRE OF SOIL DISTURBANCE THIS PROJECT DOES NOT FALL UNDER THE JURISDICTION OF GENERAL PERMIT 3-9020 FOR STORMWATER RUNOFF FROM CONSTRUCTION SITES. SHOULD CHANGES PRIOR TO OR DURING CONSTRUCTION RESULT IN ONE OR MORE ACRES OF EARTH DISTURBANCE OR SHOULD THE PROJECT BECOME PART OF A LARGER PLAN OF DEVELOPMENT, THE CONTRACTOR WILL BE RESPONSIBLE FOR ANY ADDITIONAL PERMITTING.

1.4 EROSION PREVENTION AND SEDIMENT CONTROL

THE EPSC PLAN IS MEANT AS A GUIDELINE FOR PREVENTING EROSION AND CONTROLLING SEDIMENT TRANSPORT TO THE EXTENT FEASIBLE. THE PRINCIPLES OUTLINED IN THIS NARRATIVE CONSIST OF APPLYING MEASURES THROUGHOUT CONSTRUCTION OF THE PROJECT IN ORDER TO MINIMIZE SEDIMENT TRANSPORT TO THE RECEIVING WATERS. THE MEASURES INCLUDE STABILIZATION AND STRUCTURAL PRACTICES, STORM WATER CONTROLS AND OTHER POLLUTION PREVENTION PRACTICES. THEY HAVE BEEN PROPOSED BY THE DESIGNER AS A BASIS FOR PROTECTING RESOURCES AND WILL NEED TO BE BUILT UPON BASED ON THE SPECIFIC MEANS AND METHODS OF THE CONTRACTOR. REFER TO THE LOW RISK SITE HANDBOOK AND APPROPRIATE DETAIL SHEETS FOR SPECIFIC GUIDANCE AND CONSTRUCTION DETAILING.

ALL MEASURES SHALL BE REGULARLY MAINTAINED AND SHALL BE CHECKED FOR SEDIMENT BUILD-UP. SEDIMENT SHALL BE DISPOSED OF AT AN APPROVED SITE WHERE IT WILL NOT BE SUBJECT TO EROSION.

1.4.1 MARK SITE BOUNDARIES

SITE BOUNDARIES AND AREAS CONSTRUCTION EQUIPMENT CAN ACCESS SHALL BE DELINEATED.

PROJECT DEMARCATION FENCING (PDF) SHALL BE USED TO PHYSICALLY MARK SITE BOUNDARIES.

1.4.2 LIMIT DISTURBANCE AREA

PREVENTING INITIAL SOIL EROSION BY MINIMIZING THE EXPOSED AREA IS MUCH MORE EFFECTIVE THAN TREATING ERODED SEDIMENT. EARTH DISTURBANCE CAN BE MINIMIZED THROUGH CONSTRUCTION PHASING BY ONLY OPENING UP EARTH AS NECESSARY. THIS CAN LIMIT THE AREA THAT WILL BE DISTURBED AND EXPOSED TO EROSION. EMPLOY TEMPORARY CONSTRUCTION STABILIZATION PRACTICES IN INCREMENTAL STAGES AS PHASES CHANGE.

MAINTAINING VEGETATED BUFFERS ALONG STREAM BANKS, WETLANDS OR OTHER SENSITIVE AREAS IS A CRUCIAL EROSION AND SEDIMENT CONTROL MEASURE THAT SHOULD BE ESTABLISHED WHEREVER POSSIBLE.

1.4.3 SITE ENTRANCE/EXIT STABILIZATION

TRACKING OF SEDIMENT ONTO PUBLIC HIGHWAYS SHALL BE MINIMIZED FOR PUBLIC SAFETY AND TO REDUCE THE POTENTIAL FOR RUNOFF ENTERING RECEIVING WATERS. INSTALLATION SHALL COINCIDE WITH THE PROGRESS SCHEDULE.

STABILIZED CONSTRUCTION ENTRANCES SHALL BE INSTALLED AS PROPOSED ON THE EPSC PLAN AND ANYWHERE EQUIPMENT WILL BE GOING FROM AREAS OF EXPOSED SOILS TO PAVED SURFACES.

1.4.4 INSTALL SEDIMENT BARRIERS

SEDIMENT BARRIERS SHALL BE UTILIZED TO INTERCEPT RUNOFF AND ALLOW SUSPENDED SEDIMENT TO SETTLE OUT. THEY SHALL BE INSTALLED PRIOR TO ANY UP SLOPE WORK.

WOVEN WIRE REINFORCED SILT FENCE SHALL BE INSTALLED AS PROPOSED ON THE EPSC PLAN.

1.4.5 DIVERT UPLAND RUNOFF

DIVERSIONARY MEASURES SHALL BE USED TO INTERCEPT RUNOFF FROM ABOVE THE CONSTRUCTION AND DIRECT IT AROUND THE DISTURBED AREA SO THAT CLEAN WATER DOES NOT BECOME MUDDIED WHILE TRAVELING OVER EXPOSED SOILS ON THE CONSTRUCTION SITE.

IT IS NOT ANTICIPATED THAT DIVERSIONARY MEASURES WILL BE NECESSARY FOR THIS PROJECT SITE.

1.4.6 SLOW DOWN CHANNELIZED RUNOFF

CHECK STRUCTURES SHALL BE UTILIZED TO REDUCE THE VELOCITY, AND THUS THE EROSIVE POTENTIAL, OF CONCENTRATED FLOW IN CHANNELS.

CHECK STRUCTURES ARE NOT ANTICIPATED FOR THIS PROJECT.

1.4.7 CONSTRUCT PERMANENT CONTROLS

PERMANENT EROSION CONTROL STRUCTURES ARE NOT ANTICIPATED FOR THIS PROJECT.

1.4.8 STABILIZE EXPOSED SOILS DURING CONSTRUCTION

ALL AREAS OF DISTURBANCE MUST HAVE TEMPORARY STABILIZATION IN PLACE WITHIN 48 HOURS OF DISTURBANCE.

SURFACE ROUGHENING OF ALL EXPOSED SLOPES, COMBINED WITH TEMPORARY MULCHING, SHALL BE UTILIZED ON A REGULAR BASIS. BIODEGRADABLE EROSION CONTROL MATTING OR AN EQUIVALENT SHALL BE USED TO STABILIZE ALL SLOPES STEEPER THAN 1:3. STONE FILL, TYPE II SHALL BE USED TO STABILIZE ALL SLOPES STEEPER THAN 1:2.

THE FORECAST OF RAINFALL EVENTS SHALL TRIGGER IMMEDIATE PROTECTION OF EXPOSED SOILS.

1.4.9 WINTER STABILIZATION

VARIOUS MEASURES SPECIFIC TO WINTER MAY BE NECESSARY SHOULD THE PROJECT EXTEND INTO WINTER (OCTOBER 15 THROUGH APRIL 15). REFER TO THE LOW RISK SITE HANDBOOK FOR GUIDANCE.

1.4.10 STABILIZE SOIL AT FINAL GRADE

EXPOSED SOIL MUST BE STABILIZED WITHIN 48 HOURS OF REACHING FINAL GRADE.

SEED, MULCH, FERTILIZER AND LIME SHALL BE USED TO ESTABLISH PERMANENT VEGETATION. FOR SLOPES STEEPER THAN 1:3, BIODEGRADABLE EROSION CONTROL MATTING OR AN EQUIVALENT SHALL BE USED INSTEAD OF MULCH. FOR SLOPES STEEPER THAN 1:2, STONE FILL, TYPE II SHALL BE USED INSTEAD OF BIODEGRADABLE EROSION CONTROL MATTING.

1.4.11 DE-WATERING ACTIVITIES

DISCHARGE FROM DEWATERING ACTIVITIES THAT FLOWS OFF OF THE CONSTRUCTION SITE MUST NOT CAUSE OR CONTRIBUTE TO A VIOLATION OF THE VERMONT WATER QUALITY STANDARDS.

TREATMENT OF DEWATERING COFFERDAM IS NOT ANTICIPATED FOR THIS PROJECT.

1.4.12 INSPECT YOUR SITE

INSPECT THE PROJECT SITE BASED ON SPECIAL PROVISION REQUIREMENTS.

1.5 SEQUENCE AND STAGING

THIS SECTION WILL BE DEVELOPED BY THE CONTRACTOR USING THE GUIDANCE OUTLINED IN THE VTRANS EPSC PLAN CONTRACTOR CHECKLIST.

1.5.1 CONSTRUCTION SEQUENCE

1.5.2 OFF-SITE ACTIVITIES

IN ADDITION TO THE CONTRACTOR CHECKLIST ANY ACTIVITIES OUTSIDE THE CONSTRUCTION LIMITS SHALL FOLLOW SUBSECTIONS 105.25 - 105.29 OF THE STANDARD SPECIFICATIONS FOR CONSTRUCTION.

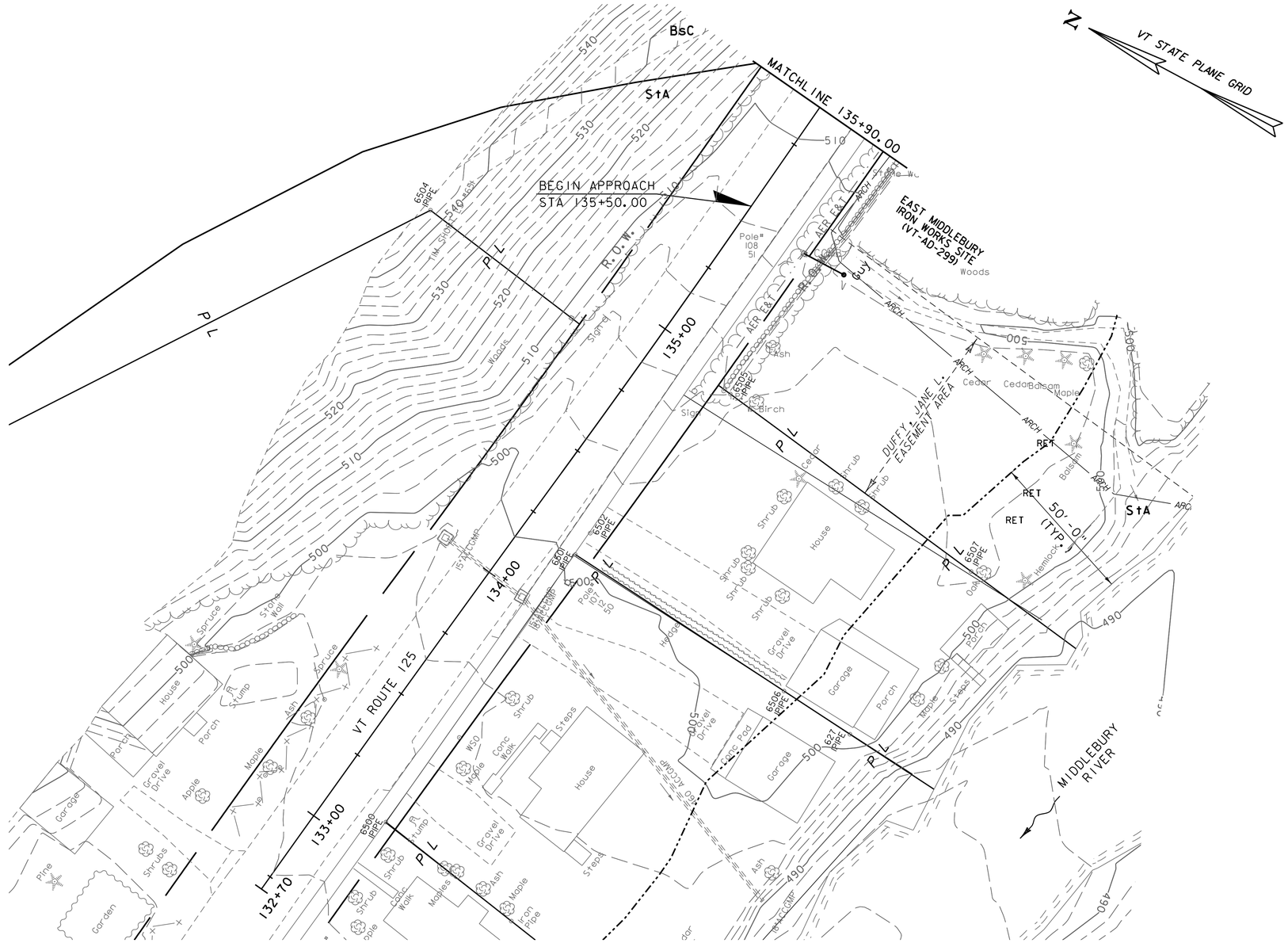

SOIL CLASSIFICATION

BERKSHIRE AND MARLOW
EXTREMELY STONY LOAM (BsC)
3% TO 20% SLOPES
"K FACTOR" = 0.20
CLASSIFIED LOW EROSION POTENTIAL

STETSON GRAVELLY FINE SANDY LOAM (StA)
0% TO 5% SLOPES
"K FACTOR" = 0.10
CLASSIFIED LOW EROSION POTENTIAL

PLAN

SCALE 1" = 20'-0

20 0 20

DATUM

VERTICAL	NAVD 88
HORIZONTAL	NAD 83 (92)

VHB Vanasse Hangen Brustlin, Inc.

PROJECT NAME: MIDDLEBURY

PROJECT NUMBER: RS 0174(8)

FILE NAME: z78f217bdr_ero.dgn	PLOT DATE: 8/27/2013
PROJECT LEADER: M.A. COLGAN	DRAWN BY: B.J. MASSE
DESIGNED BY: B.J. MASSE	CHECKED BY: K. REINHART
EPSC EXISTING SITE PLAN (1 OF 3)	SHEET 94 OF 104

VHB 57438

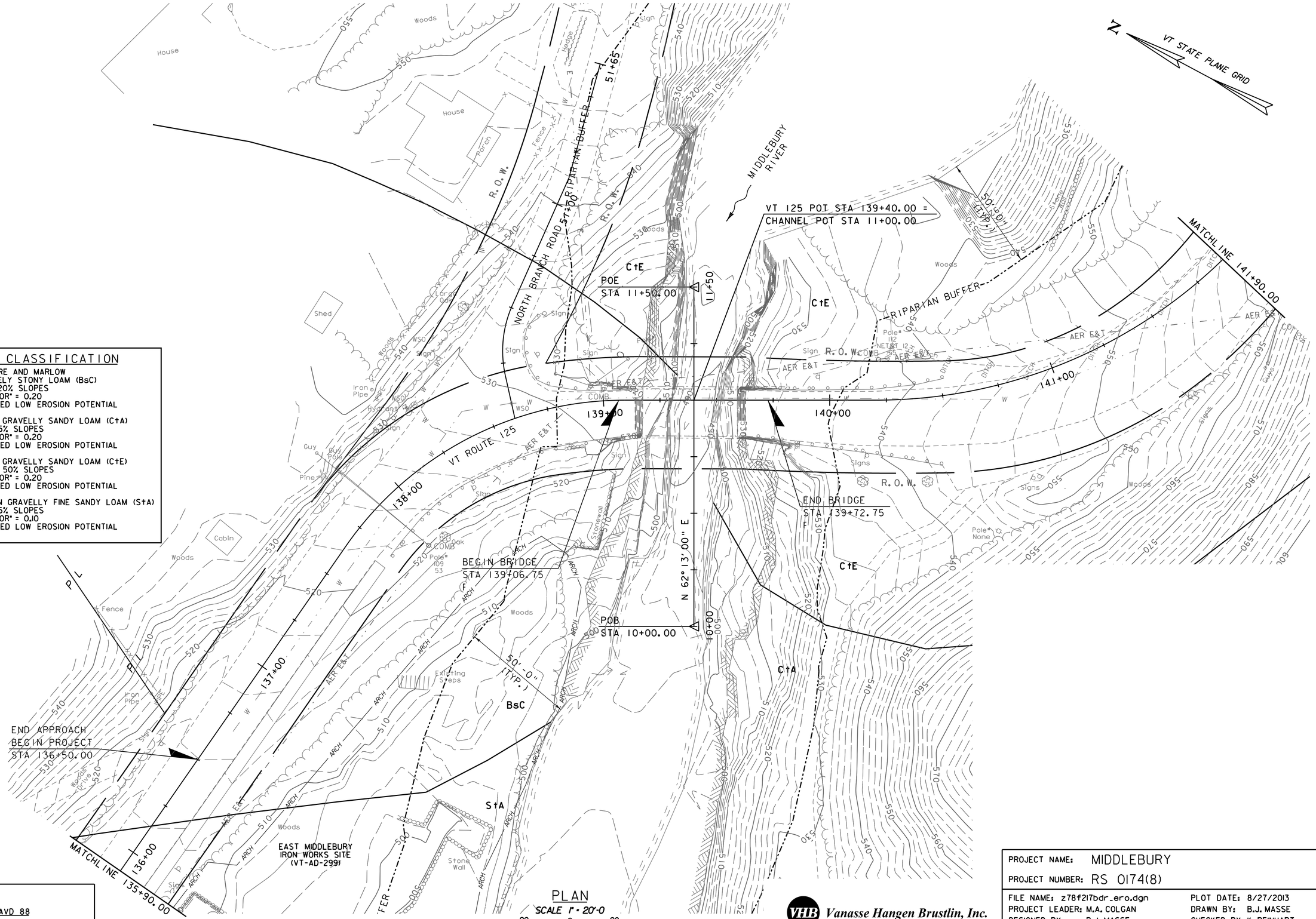

SOIL CLASSIFICATION

BERKSHIRE AND MARLOW
EXTREMELY STONY LOAM (BsC)
3% TO 20% SLOPES
"K FACTOR" = 0.20
CLASSIFIED LOW EROSION POTENTIAL

COLTON GRAVELLY SANDY LOAM (CtA)
0% TO 5% SLOPES
"K FACTOR" = 0.20
CLASSIFIED LOW EROSION POTENTIAL

COLTON GRAVELLY SANDY LOAM (CtE)
30% TO 50% SLOPES
"K FACTOR" = 0.20
CLASSIFIED LOW EROSION POTENTIAL

STETSON GRAVELLY FINE SANDY LOAM (StA)
0% TO 5% SLOPES
"K FACTOR" = 0.10
CLASSIFIED LOW EROSION POTENTIAL

DATUM

VERTICAL	NAVD 88
HORIZONTAL	NAD 83 (92)

VHB Vanasse Hangen Brustlin, Inc.

PROJECT NAME: MIDDLEBURY	
PROJECT NUMBER: RS 0174(8)	
FILE NAME: z78f217bdr_ero.dgn	PLOT DATE: 8/27/2013
PROJECT LEADER: M.A. COLGAN	DRAWN BY: B.J. MASSE
DESIGNED BY: B.J. MASSE	CHECKED BY: K. REINHART
EPSC EXISTING SITE PLAN (2 OF 3)	SHEET 95 OF 104

SOIL CLASSIFICATION

BERKSHIRE AND MARLOW
EXTREMELY STONY LOAM (BsC)
3% TO 20% SLOPES
"K FACTOR" = 0.20
CLASSIFIED LOW EROSION POTENTIAL

COLTON GRAVELLY SANDY LOAM (C+E)
30% TO 50% SLOPES
"K FACTOR" = 0.20
CLASSIFIED LOW EROSION POTENTIAL

PLAN

SCALE 1" = 20'-0

20 0 20

DATUM

VERTICAL	NAVD 88
HORIZONTAL	NAD 83 (92)

VHB Vanasse Hangen Brustlin, Inc.

PROJECT NAME: MIDDLEBURY
PROJECT NUMBER: RS 0174(8)

FILE NAME: z78f217bdr_ero.dgn	PLOT DATE: 8/27/2013
PROJECT LEADER: M.A. COLGAN	DRAWN BY: B.J. MASSE
DESIGNED BY: B.J. MASSE	CHECKED BY: K. REINHART
EPSC EXISTING SITE PLAN (3 OF 3)	SHEET 96 OF 104

VHB 57438

PLAN

SCALE 1" = 20'-0

20 0 20

NOTES:

1. THESE PLANS SHOW A CONCEPTUAL EROSION CONTROL PLAN, THE CONTRACTOR MUST SUBMIT A TEMPORARY EPSC PLAN FOR APPROVAL.
2. TEMPORARY EPSC PLAN MEASURES ARE CONCEPTUALLY SHOWN. THE CONTRACTOR MAY RELOCATE TEMPORARY MEASURES TO IMPROVE EROSION CONTROL WITH APPROVAL OF THE RESIDENT ENGINEER. SILT FENCE SHALL NOT BE INSTALLED ACROSS CONTOURS.
3. THE CONTRACTOR SHALL USE OTHER TEMPORARY EROSION CONTROL MEASURES AS NECESSITATED BY THE SEQUENCE OF CONSTRUCTION OR AS DIRECTED BY THE RESIDENT ENGINEER.
4. REFER TO TEMPORARY EROSION CONTROL DETAIL SHEETS FOR ADDITIONAL DETAILS.
5. SEE SHEET 14, CONVENTIONAL SYMBOLOGY LEGEND, FOR EPSC LAYOUT PLAN SYMBOLOGY.

DATUM

VERTICAL	NAVD 88
HORIZONTAL	NAD 83 (92)

VHB Vanasse Hangen Brustlin, Inc.

PROJECT NAME: MIDDLEBURY	
PROJECT NUMBER: RS 0174(8)	
FILE NAME: z78f217bdr_ero.dgn	PLOT DATE: 8/27/2013
PROJECT LEADER: M.A. COLGAN	DRAWN BY: B.J. MASSE
DESIGNED BY: B.J. MASSE	CHECKED BY: K. REINHART
EPSC CONSTRUCTION SITE PLAN (1 OF 3)	SHEET 97 OF 104

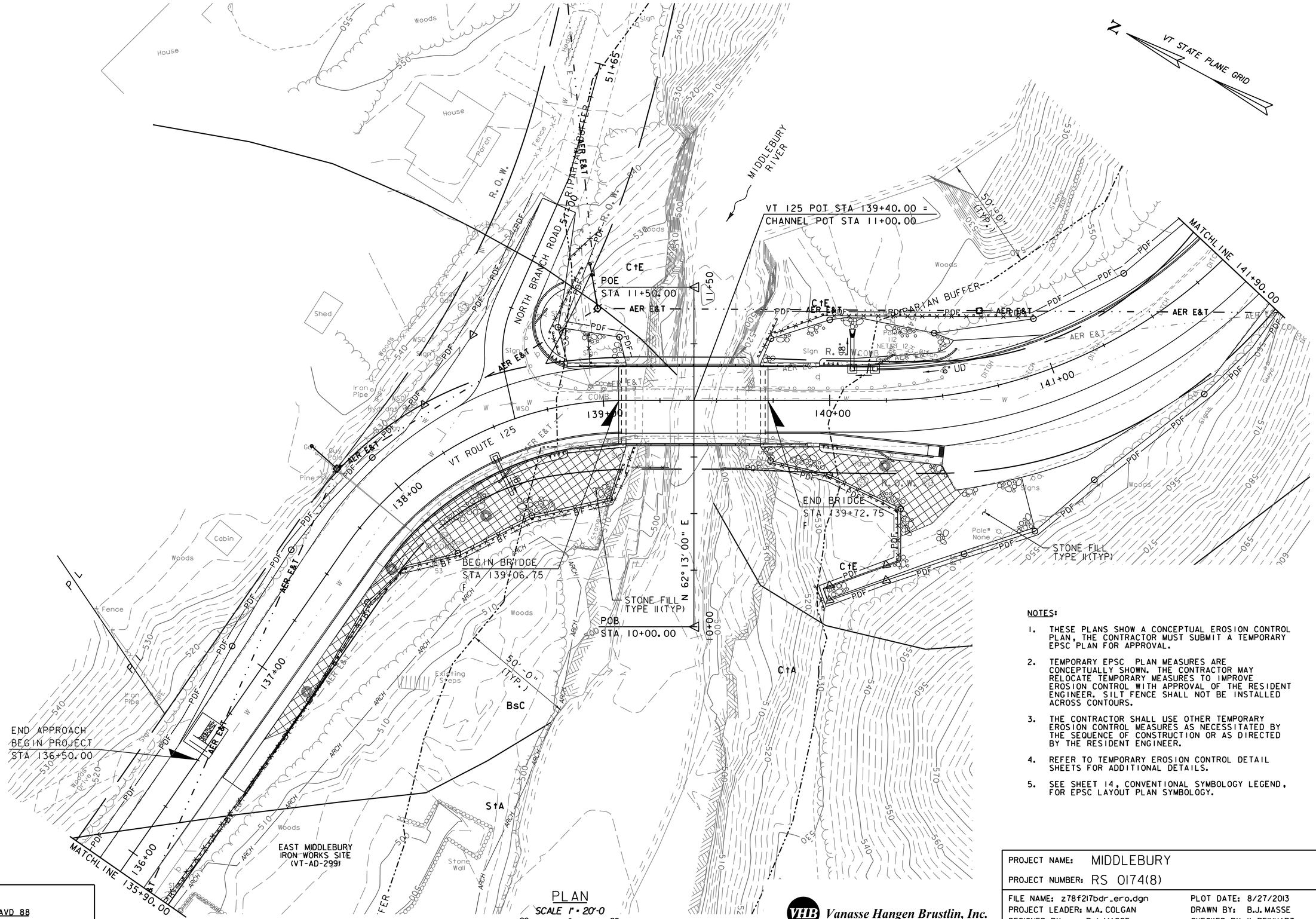

NOTES:

1. THESE PLANS SHOW A CONCEPTUAL EROSION CONTROL PLAN, THE CONTRACTOR MUST SUBMIT A TEMPORARY EPSC PLAN FOR APPROVAL.
2. TEMPORARY EPSC PLAN MEASURES ARE CONCEPTUALLY SHOWN. THE CONTRACTOR MAY RELOCATE TEMPORARY MEASURES TO IMPROVE EROSION CONTROL WITH APPROVAL OF THE RESIDENT ENGINEER. SILT FENCE SHALL NOT BE INSTALLED ACROSS CONTOURS.
3. THE CONTRACTOR SHALL USE OTHER TEMPORARY EROSION CONTROL MEASURES AS NECESSITATED BY THE SEQUENCE OF CONSTRUCTION OR AS DIRECTED BY THE RESIDENT ENGINEER.
4. REFER TO TEMPORARY EROSION CONTROL DETAIL SHEETS FOR ADDITIONAL DETAILS.
5. SEE SHEET 14, CONVENTIONAL SYMBOLOGY LEGEND, FOR EPSC LAYOUT PLAN SYMBOLOGY.

DATUM

VERTICAL	NAVD 88
HORIZONTAL	NAD 83 (92)

VHB Vanasse Hangen Brustlin, Inc.

PROJECT NAME: MIDDLEBURY	
PROJECT NUMBER: RS 0174(8)	
FILE NAME: z78f217bdr_ero.dgn	PLOT DATE: 8/27/2013
PROJECT LEADER: M.A. COLGAN	DRAWN BY: B.J. MASSE
DESIGNED BY: B.J. MASSE	CHECKED BY: K. REINHART
EPSC CONSTRUCTION SITE PLAN (2 OF 3)	SHEET 98 OF 104

VHB 57438

NOTES:

1. THESE PLANS SHOW A CONCEPTUAL EROSION CONTROL PLAN, THE CONTRACTOR MUST SUBMIT A TEMPORARY EPSC PLAN FOR APPROVAL.
2. TEMPORARY EPSC PLAN MEASURES ARE CONCEPTUALLY SHOWN. THE CONTRACTOR MAY RELOCATE TEMPORARY MEASURES TO IMPROVE EROSION CONTROL WITH APPROVAL OF THE RESIDENT ENGINEER. SILT FENCE SHALL NOT BE INSTALLED ACROSS CONTOURS.
3. THE CONTRACTOR SHALL USE OTHER TEMPORARY EROSION CONTROL MEASURES AS NECESSITATED BY THE SEQUENCE OF CONSTRUCTION OR AS DIRECTED BY THE RESIDENT ENGINEER.
4. REFER TO TEMPORARY EROSION CONTROL DETAIL SHEETS FOR ADDITIONAL DETAILS.
5. SEE SHEET 14, CONVENTIONAL SYMBOLOGY LEGEND, FOR EPSC LAYOUT PLAN SYMBOLOGY.

PLAN

SCALE 1" = 20'-0

20 0 20

DATUM

VERTICAL	NAVD 88
HORIZONTAL	NAD 83 (92)

VHB Vanasse Hangen Brustlin, Inc.

PROJECT NAME: MIDDLEBURY	
PROJECT NUMBER: RS 0174(8)	
FILE NAME: z78f217bdr_ero.dgn	PLOT DATE: 8/27/2013
PROJECT LEADER: M.A. COLGAN	DRAWN BY: B.J. MASSE
DESIGNED BY: B.J. MASSE	CHECKED BY: K. REINHART
EPSC CONSTRUCTION SITE PLAN (3 OF 3)	SHEET 99 OF 104

VHB 57438

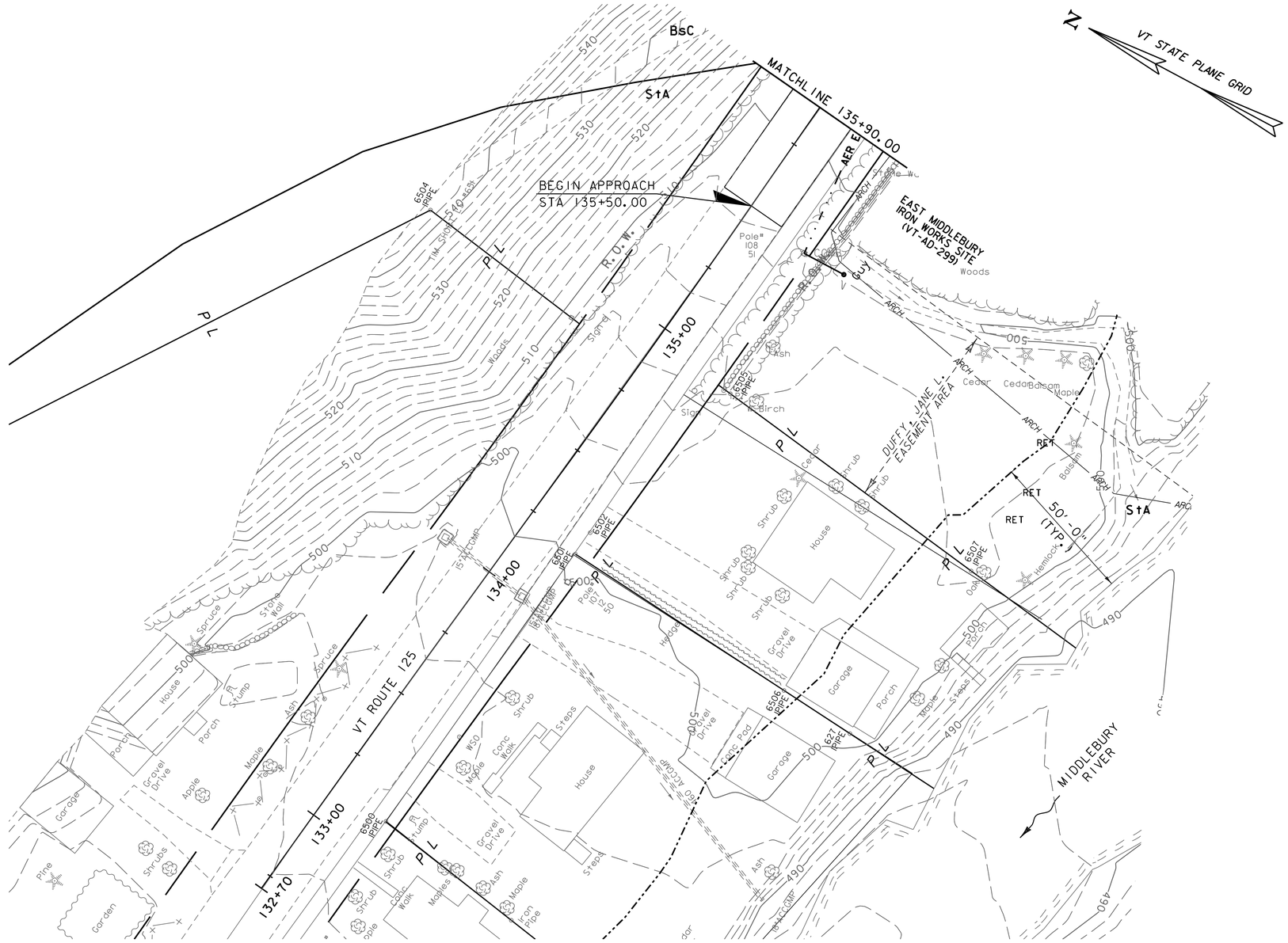

PLAN

SCALE 1" = 20'-0

20 0 20

DATUM

VERTICAL	NAVD 88
HORIZONTAL	NAD 83 (92)

VHB Vanasse Hangen Brustlin, Inc.

PROJECT NAME: MIDDLEBURY	
PROJECT NUMBER: RS 0174(8)	
FILE NAME: z78f217bdr_ero.dgn	PLOT DATE: 8/27/2013
PROJECT LEADER: M.A. COLGAN	DRAWN BY: B.J. MASSE
DESIGNED BY: B.J. MASSE	CHECKED BY: K. REINHART
EPSC FINAL SITE PLAN (1 OF 3)	SHEET 100 OF 104

VHB 57438

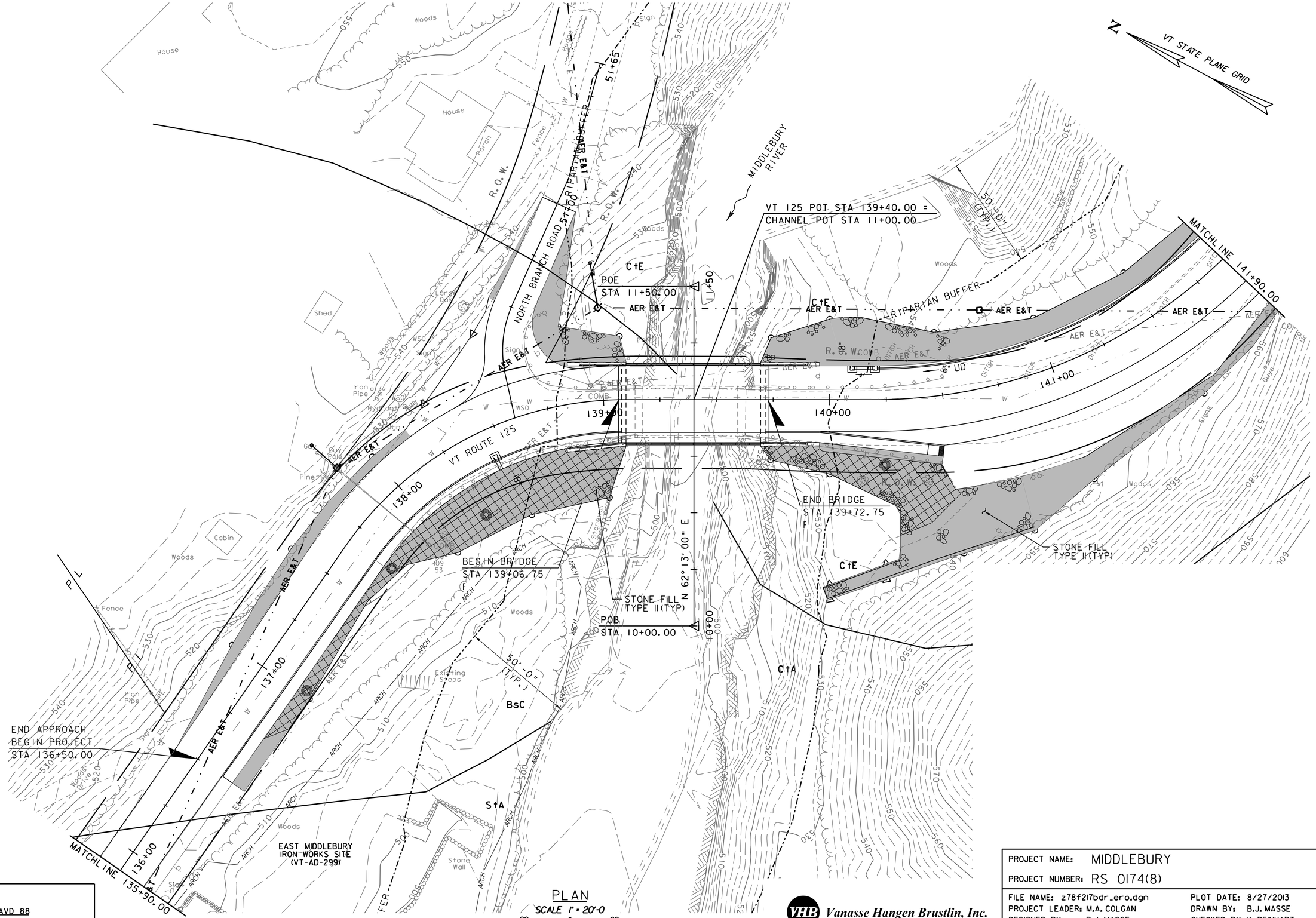

DATUM

VERTICAL	NAVD 88
HORIZONTAL	NAD 83 (92)

VHB Vanasse Hangen Brustlin, Inc.

PROJECT NAME:	MIDDLEBURY
PROJECT NUMBER:	RS 0174(8)

FILE NAME: z78f217bdr_ero.dgn	PLOT DATE: 8/27/2013
PROJECT LEADER: M.A. COLGAN	DRAWN BY: B.J. MASSE
DESIGNED BY: B.J. MASSE	CHECKED BY: K. REINHART
EPSC FINAL SITE PLAN (2 OF 2)	SHEET 101 OF 104

VHB 57438

PLAN

SCALE 1" = 20'-0

20 0 20

DATUM

VERTICAL NAVD 88

HORIZONTAL NAD 83 (92)

Vanasse Hangen Brustlin, Inc.

PROJECT NAME: MIDDLEBURY	
PROJECT NUMBER: RS 0174(8)	
FILE NAME: z78f217bdr_ero.dgn	PLOT DATE: 8/27/2013
PROJECT LEADER: M.A. COLGAN	DRAWN BY: B.J. MASSE
DESIGNED BY: B.J. MASSE	CHECKED BY: K. REINHART
EPSC FINAL SITE PLAN (3 OF 3)	SHEET 102 OF 104

VHB 57438

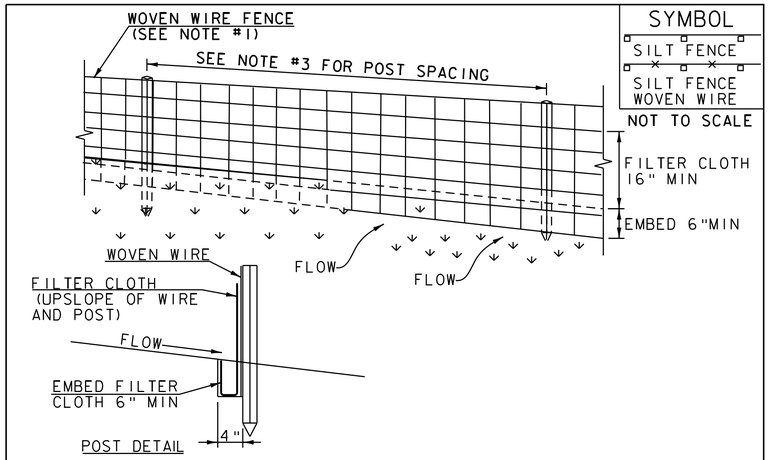

SYMBOL

SILT FENCE

SILT FENCE WOVEN WIRE

NOT TO SCALE

CONSTRUCTION SPECIFICATIONS

1. WOVEN WIRE REINFORCED FENCE IS REQUIRED WITHIN 50' UPSLOPE OF RECEIVING WATERS WHEN THE PROJECT FALLS UNDER A CONSTRUCTION STORMWATER PERMIT. WOVEN WIRE SHALL BE A MIN. 14 GAUGE WITH A 6" MAX. MESH OPENING.
2. FILTER CLOTH SHALL BE EITHER FILTER X, MIRAFI100X, STABILINKA T140N OR APPROVED EQUIVALENT.
3. POST SPACING FOR WIRE-BACKED FENCE SHALL BE 10' MAXIMUM. FOR FILTER-CLOTH FENCE, WHEN ELONGATION IS >50%, POST SPACING SHALL NOT EXCEED 4' AND WHEN ELONGATION IS <50%, POST SPACING SHALL NOT EXCEED 6'.
4. WOVEN WIRE FENCE IS TO BE FASTENED SECURELY TO FENCE POSTS WITH WIRE TIES. FILTER CLOTH IS TO BE FASTENED SECURELY TO WOVEN WIRE FENCE WITH TIES SPACED EVERY 24" AT TOP AND MID SECTION.
5. WHEN TWO SECTIONS OF FILTER CLOTH ADJOIN EACH OTHER THEY SHALL BE OVER-LAPPED BY 6" AND FOLDED.
6. MAINTENANCE SHALL BE PERFORMED AS NEEDED AND MATERIAL REMOVED WHEN SEDIMENT REACHES HALF OF FABRIC HEIGHT.

ADAPTED FROM DETAILS PROVIDED BY: NEW YORK STATE DEC
ORIGINALLY DEVELOPED BY USDA-NRCS
VERMONT DEPARTMENT OF ENVIRONMENTAL CONSERVATION

SILT FENCE

NOTES:
REFER TO "THE VERMONT STANDARDS & SPECIFICATIONS FOR EROSION PREVENTION & SEDIMENT CONTROL -2006- " FROM THE VT AGENCY OF NATURAL RESOURCES FOR ADDITIONAL GUIDANCE.

THIS WORK SHALL BE PERFORMED IN ACCORDANCE WITH SECTION 649 AND AS SHOWN IN THE PLANS FOR ~~GEOTEXTILE FOR SILT FENCE (PAY ITEM 649.51) OR~~ GEOTEXTILE FOR SILT FENCE, WOVEN WIRE REINFORCED (PAY ITEM 649.515).

REVISIONS	
MARCH 21, 2008	WHF
DECEMBER 11, 2008	WHF
JANUARY 13, 2009	WHF

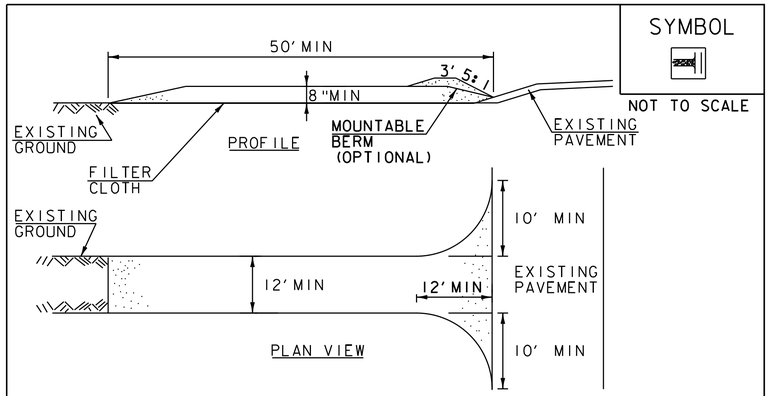

SYMBOL

NOT TO SCALE

CONSTRUCTION SPECIFICATIONS

1. STONE SIZE- USE 1-4" STONE, RECLAIMED OR RECYCLED CONCRETE EQUIVALENT.
2. LENGTH- NOT LESS THAN 50' (EXCEPT ON A SINGLE RESIDENCE LOT WHERE A 30' MINIMUM LENGTH APPLIES).
3. THICKNESS- NOT LESS THAN 8".
4. WIDTH- 12' MINIMUM, BUT NOT LESS THAN THE FULL WIDTH AT POINTS WHERE INGRESS OR EGRESS OCCURS. 24' IF SINGLE ENTRANCE TO SITE.
5. GEOTEXTILE MUST BE PLACED OVER THE ENTIRE AREA PRIOR TO PLACING STONE.
6. SURFACE WATER- ALL SURFACE WATER FLOWING OR DIVERTED TOWARD CONSTRUCTION ENTRANCES SHALL BE PIPED BENEATH THE ENTRANCE. IF PIPING IS IMPRACTICAL, A MOUNTABLE BERM WITH 5:1 SLOPES WILL BE PERMITTED.
7. MAINTENANCE- THE ENTRANCE SHALL BE MAINTAINED IN A CONDITION WHICH WILL PREVENT TRACKING OR FLOWING OF SEDIMENT ONTO PUBLIC RIGHTS-OF-WAY, ALL SEDIMENT SPILLED, DROPPED, WASHED OR TRACKED ONTO PUBLIC RIGHTS-OF-WAY MUST BE REMOVED IMMEDIATELY.
8. WHEN WASHING IS REQUIRED, IT SHALL BE DONE ON AN AREA STABILIZED WITH STONE AND WHICH DRAINS INTO AN APPROVED SEDIMENT TRAPPING DEVICE.
9. PERIODIC INSPECTION AND NEEDED MAINTENANCE SHALL BE PROVIDED ACCORDING TO PERMIT REQUIREMENTS.

ADAPTED FROM DETAILS PROVIDED BY: NEW YORK STATE DEC
ORIGINALLY DEVELOPED BY USDA-NRCS
VERMONT DEPARTMENT OF ENVIRONMENTAL CONSERVATION

STABILIZED CONSTRUCTION ENTRANCE

NOTES:
REFER TO "THE VERMONT STANDARDS & SPECIFICATIONS FOR EROSION PREVENTION & SEDIMENT CONTROL -2006- " FROM THE VT AGENCY OF NATURAL RESOURCES FOR ADDITIONAL GUIDANCE.

THIS WORK SHALL BE PERFORMED IN ACCORDANCE WITH SECTION 653 FOR VEHICLE TRACKING PAD (PAY ITEM 653.35) OR AS SPECIFIED IN THE CONTRACT.

REVISIONS	
MARCH 24, 2008	WHF
JANUARY 13, 2009	WHF

VHB Vanasse Hangen Brustlin, Inc.

PROJECT NAME: MIDDLEBURY
PROJECT NUMBER: RS 0174(8)

FILE NAME: z78f217ero_details.dgn
PROJECT LEADER: M.A. COLGAN
DESIGNED BY: VTRANS
EPSC DETAILS (1 OF 2)

PLOT DATE: 8/27/2013
DRAWN BY: B.J. MASSE
CHECKED BY: G.S. GOODRICH
SHEET 103 OF 104

VHB 57438

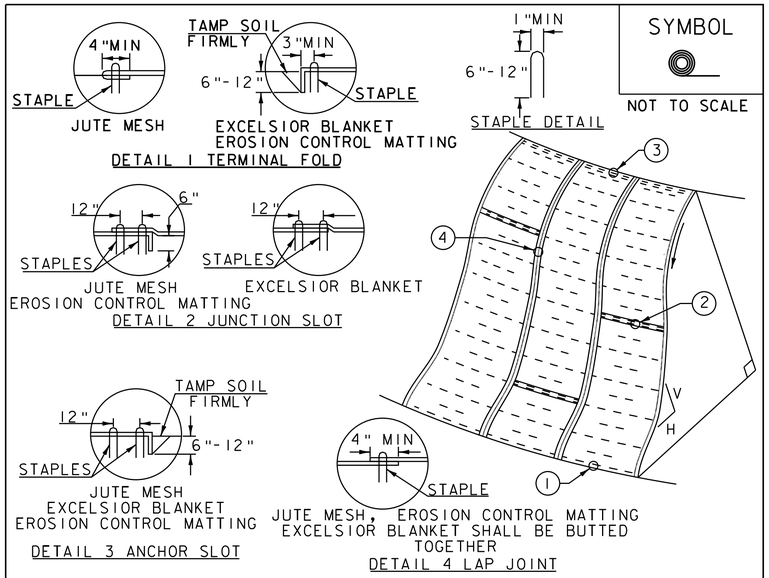

CONSTRUCTION SPECIFICATIONS

1. APPLY TO SLOPES GREATER THAN 3H:1V OR WHERE NECESSARY TO AID IN ESTABLISHING VEGETATION.
2. APPLY FERTILIZER, LIME SEED PRIOR TO PLACING MATTING.
3. STAPLES ARE TO BE PLACED ALTERNATELY, IN COLUMNS APPROXIMATELY 2' APART AND IN ROWS APPROXIMATELY 3' APART. APPROXIMATELY 175 STAPLES ARE REQUIRED PER 4'X225' ROLL OF MATERIAL AND 125 STAPLES ARE REQUIRED PER 4'X150' ROLL OF MATERIAL.
4. DISTURBED AREAS SHALL BE SMOOTHLY GRADED. EROSION CONTROL MATERIAL SHALL BE PLACED LOOSELY OVER GROUND SURFACE. DO NOT STRETCH.
5. ALL TERMINAL ENDS AND TRANSVERSE LAPS SHALL BE STAPLED AT APPROXIMATELY 12" INTERVALS.

ADAPTED FROM DETAILS PROVIDED BY: NEW YORK STATE DEC
ORIGINALLY DEVELOPED BY USDA-NRCS
VERMONT DEPARTMENT OF ENVIRONMENTAL CONSERVATION

ROLLED EROSION CONTROL PRODUCT (RECP) SIDE SLOPE

NOTES:
REFER TO "THE VERMONT STANDARDS & SPECIFICATIONS FOR EROSION PREVENTION & SEDIMENT CONTROL -2006- " FROM THE VT AGENCY OF NATURAL RESOURCES FOR ADDITIONAL GUIDANCE.
THIS WORK SHALL BE PERFORMED IN ACCORDANCE WITH SECTION 653 AND AS SHOWN IN THE PLANS FOR TEMPORARY EROSION MATTING (PAY ITEM 653.20) ~~OR PERMANENT EROSION MATTING (PAY ITEM 653.21)~~.

REVISIONS	
APRIL 16, 2007	JMF
JANUARY 13, 2009	WHF

VAOT RURAL AREA MIX

	LBS/AC				
% WEIGHT	BROADCAST	HYDROSEED	NAME	GERM %	PURITY %
37.5%	22.5	45	CREEPING RED FESCUE	85%	98%
37.5%	22.5	45	TALL FESCUE	90%	95%
5.0%	3	6	RED TOP	90%	95%
15.0%	9	18	BIRDSFOOT TREFOIL	85%	98%
5.0%	3	6	ANNUAL RYE GRASS	85%	95%
100%	60	120			

VAOT URBAN AREA MIX

	LBS/AC				
% WEIGHT	BROADCAST	HYDROSEED	NAME	GERM %	PURITY %
42.5%	34	68	CREEPING RED FESCUE	85%	98%
10.0%	8	16	PERENNIAL RYE GRASS	90%	95%
42.5%	34	68	KENTUCKY BLUE GRASS	85%	85%
5.0%	4	8	ANNUAL RYE GRASS	85%	95%
100%	80	160			

GENERAL GUIDANCE

FERTILIZER		LIME	
BROADCAST	HYDROSEED	BROADCAST	HYDROSEED
10-20-10	19-19-19	PELLETIZED	LIQUID
500 LBS/AC		2 TONS/AC	4.4 GAL/AC

CONSTRUCTION GUIDANCE

1. RURAL SEED MIX: USE AS INDICATED IN THE PLANS AND/OR FOR ALL ESTABLISHED UPLAND (NON WETLAND) AREAS DISTURBED BY THE CONTRACTOR.
2. URBAN SEED MIX: USE AS INDICATED IN THE PLANS AND/OR FOR ALL ESTABLISHED LAWN AREAS DISTURBED BY THE CONTRACTOR.
3. ALL SEED MIXTURES: SHALL NOT HAVE A WEED CONTENT EXCEEDING 0.40% BY WEIGHT AND SHALL BE FREE OF ALL NOXIOUS SEED.
4. FERTILIZER AND LIMESTONE: SHALL FOLLOW RATES SHOWN ON PLAN OR AS DIRECTED BY THE ENGINEER
5. HAY MULCH: TO BE PLACED ON EARTH SLOPES AT THE RATE OF 2 TONS/ACRE, ACHIEVE 90% GROUND COVER OR AS DIRECTED BY THE ENGINEER.
6. TOPSOIL: TO BE USED WITH SEED AS INDICATED ON THE PLANS, OR AS DIRECTED BY THE ENGINEER.
7. HYDROSEEDING: ALTHOUGH GUIDANCE IS GIVEN ABOVE THE SITE CONDITIONS AND THE TYPE OF HYDROSEED WILL ULTIMATELY DICTATE THE AMOUNTS AND TYPES OF SOIL AMENDMENTS TO BE APPLIED
8. TURF ESTABLISHMENT: PLACING SEED, FERTILIZER, LIME AND MULCH PRIOR TO SEPTEMBER 15 AND AFTER APRIL 15 CAN BETTER ENSURE A VIGOROUS GROWTH OF GRASS.

ADAPTED FROM VTRANS TECHNICAL LANDSCAPE MANUAL FOR ROADWAYS AND TRANSPORTATION FACILITIES

TURF ESTABLISHMENT

REVISIONS	
JUNE 23, 2009	WHF
JANUARY 15, 2010	WHF

Vanasse Hangen Brustlin, Inc.

PROJECT NAME: MIDDLEBURY
PROJECT NUMBER: RS 0174(8)

FILE NAME: z78f217ero_details.dgn
PROJECT LEADER: M.A. COLGAN
DESIGNED BY: VTRANS
EPSC DETAILS (2 OF 2)

PLOT DATE: 8/27/2013
DRAWN BY: B.J. MASSE
CHECKED BY: G.S. GOODRICH
SHEET 104 OF 104

VHB 57438

CONCRETE GENERAL NOTES

1. ALL EXPOSED EDGES OF CONCRETE SHALL BE CHAMFERED 1" x 1"

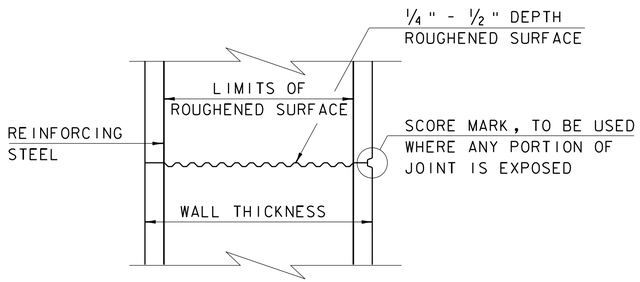

TYPICAL HORIZONTAL CONSTRUCTION JOINT
(NOT TO SCALE)

1. THE SURFACE OF THE CONCRETE CONSTRUCTION JOINTS SHALL BE CLEANED AND FREE OF LAITANCE.

2. IMMEDIATELY BEFORE NEW CONCRETE IS PLACED, ALL CONSTRUCTION JOINTS SHALL BE WETTED AND STANDING WATER REMOVED.

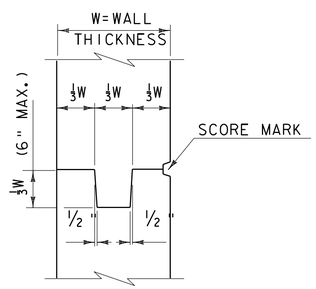

TYPICAL CONCRETE CONSTRUCTION JOINT
(NOT TO SCALE)

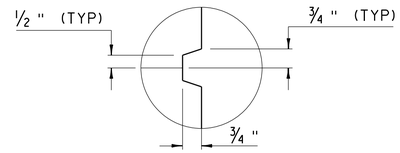

SCORE MARK DETAIL
(NOT TO SCALE)

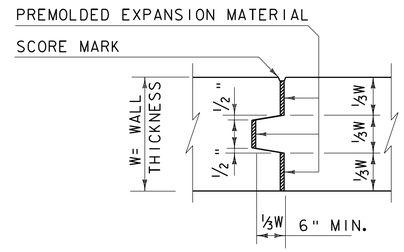

TYPICAL CONCRETE EXPANSION JOINT
(NOT TO SCALE)

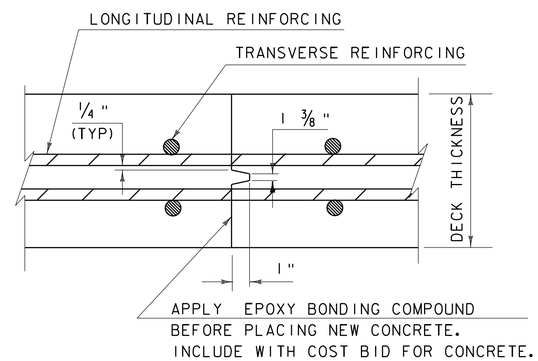

TRANSVERSE BRIDGE SLAB CONSTRUCTION JOINT DETAILS
(NOT TO SCALE)

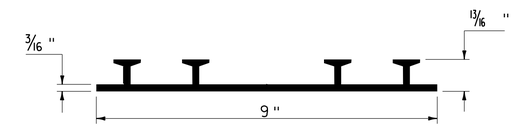

P.V.C. WATERSTOP FOR CONSTRUCTION JOINTS
(NOT TO SCALE)

PAYMENT FOR THE P.V.C. WATERSTOP SHALL BE INCIDENTAL TO THE UNIT BID PRICE FOR THE ADJACENT CONCRETE.

OTHER CONFIGURATIONS OF WATERSTOP MAY BE USED UPON APPROVAL OF THE ENGINEER.

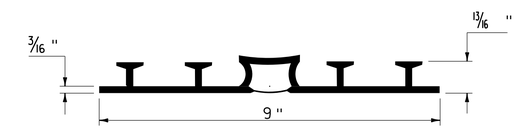

P.V.C. WATERSTOP FOR EXPANSION JOINTS
(NOT TO SCALE)

PAYMENT FOR THE P.V.C. WATERSTOP SHALL BE INCIDENTAL TO THE UNIT BID PRICE FOR THE ADJACENT CONCRETE.

OTHER CONFIGURATIONS OF WATERSTOP MAY BE USED UPON APPROVAL OF THE ENGINEER.

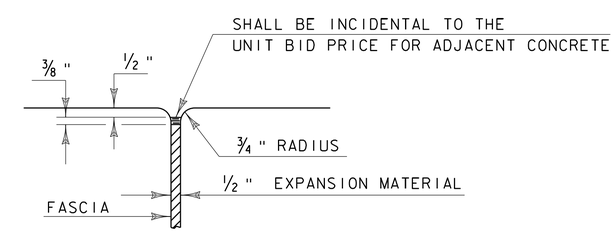

JOINT BETWEEN FASCIA AND WINGWALL
(NOT TO SCALE)

REVISIONS	
MAY 7, 2010	APPROVED FOR USE BY VAOT STRUCTURES SECTION

CONCRETE DETAILS AND NOTES

VERMONT AGENCY OF TRANSPORTATION
STRUCTURES - SECTION

STRUCTURES DETAIL
SD-501.00

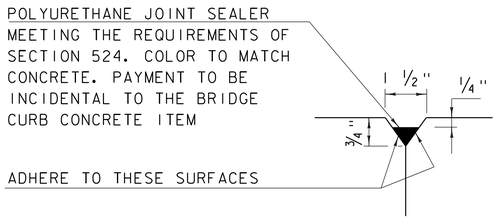

DETAIL "B"
(NOT TO SCALE)

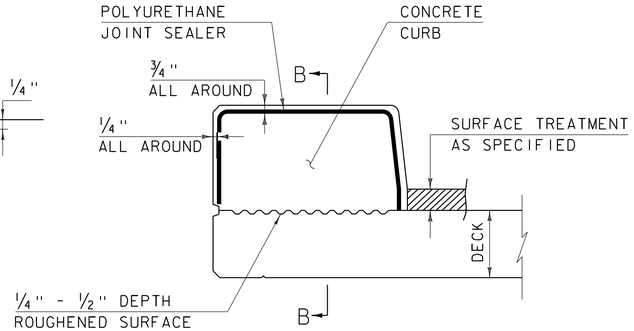

CONCRETE CURB JOINT SECTION
(NOT TO SCALE)

1. SEE TYPICAL HORIZONTAL CONSTRUCTION JOINT DETAIL FOR ADDITIONAL INFORMATION

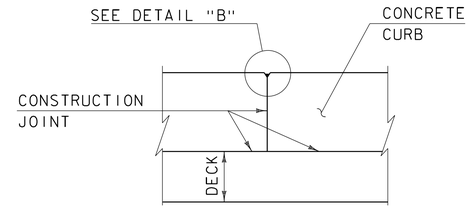

SECTION B - B
(NOT TO SCALE)

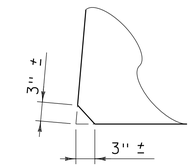

ACUTE ANGLE CLIP DETAIL
(NOT TO SCALE)

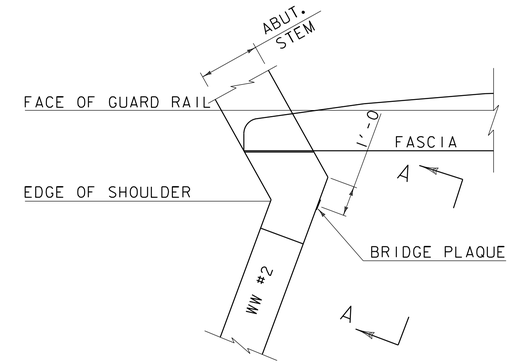

PLAN

CONCRETE CURB JOINT NOTES

1. CONCRETE CURBS MAY BE PLACED IN ONE CONTINUOUS OPERATION IF AN APPROVED SHRINKAGE REDUCING ADMIXTURE LISTED IN THE SPECIAL PROVISIONS IS USED WITH THE CONCRETE MIX DESIGN. PAYMENT FOR THE SHRINKAGE REDUCING ADMIXTURE WILL BE INCIDENTAL TO THE BRIDGE CURB CONCRETE ITEM.

2. IF THE CONTRACTOR CHOOSES NOT TO USE AN APPROVED SHRINKAGE REDUCING ADMIXTURE, THE CURBS SHALL BE CONSTRUCTED WITH CONSTRUCTION JOINTS SPACED AT A MAXIMUM OF 15'-0" CENTER TO CENTER AND 2'-0" MINIMUM FROM THE CENTER OF NEAREST BRIDGE RAILING POST.

3. ON MULTI-SPAN CONTINUOUS SUPERSTRUCTURES, REGARDLESS OF WHETHER APPROVED SHRINKAGE REDUCING ADMIXTURE IS USED, CURB JOINTS SHALL BE LOCATED OVER THE CENTERLINE OF PIERS AND 7'-0" EACH SIDE OF THE CENTERLINE OF EACH PIER.

4. WHEN CURB JOINTS ARE USED THE CURBS SHALL BE PLACED IN ALTERNATE SECTIONS WITH A MINIMUM OF 48 HOUR DELAY BETWEEN ADJACENT PLACEMENTS.

5. LONGITUDINAL REINFORCING SHALL BE CONTINUOUS THROUGH CURB CONSTRUCTION JOINTS. CURB STIRRUP BARS SHALL BE TURNED AS NECESSARY TO MAINTAIN COVER IN THE FLARED CURB ENDS.

6. THE JOINT SPACING AND DETAILS SHOWN SHALL APPLY TO SIDEWALKS WHEN SHOWN IN THE PLANS.

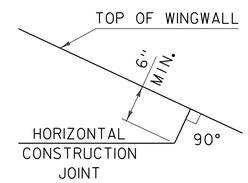

HORIZONTAL WINGWALL CONSTRUCTION JOINT
(NOT TO SCALE)

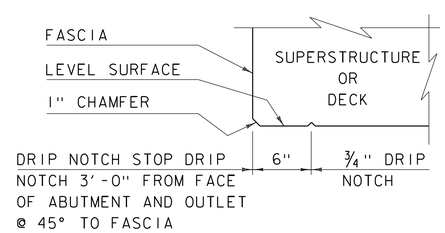

DRIP NOTCH DETAIL
(NOT TO SCALE)

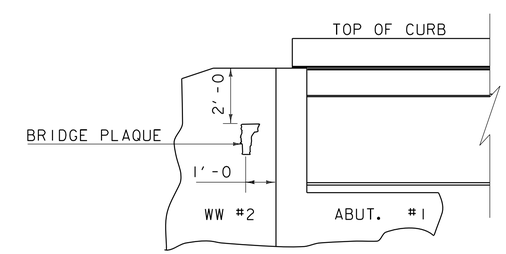

VIEW "A - A"

BRIDGE PLAQUE
(NOT TO SCALE)

THE BRIDGE PLAQUE WILL BE SUPPLIED BY THE AGENCY OF TRANSPORTATION AND SHALL BE INSTALLED BY THE CONTRACTOR AT ABUTMENT #1 ON THE RIGHT SIDE AS SHOWN OR AS DIRECTED BY THE ENGINEER.

PAYMENT FOR INSTALLATION OF THE BRIDGE PLAQUE SHALL BE INCIDENTAL TO THE ADJACENT CONCRETE.

REVISIONS

MAY 7, 2010	APPROVED FOR USE BY VAOT STRUCTURES SECTION
JUNE 4, 2010	MODIFIED AND ADDED TWO DETAILS
OCTOBER 10, 2012	MODIFIED HORZ. JOINT WINGWALL ADD 6" MIN. DIMENSION

CONCRETE DETAILS AND NOTES

VERMONT AGENCY OF TRANSPORTATION
STRUCTURES - SECTION

STRUCTURES DETAIL
SD-502.00

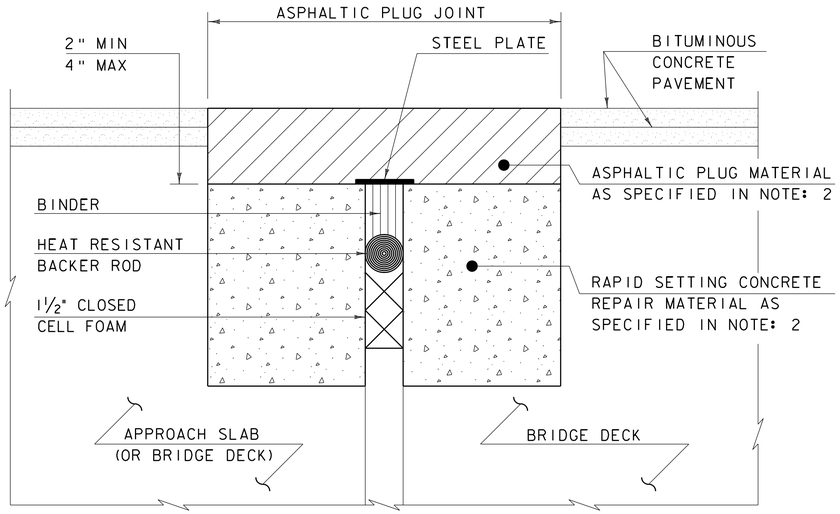

ASPHALTIC PLUG-TYPE JOINT DETAIL - REHAB

NOTES: (NOT TO SCALE)

1. THE CONTRACTOR SHALL REMOVE ALL ASPHALTIC PLUG JOINT MATERIAL AND DETERIORATED CONCRETE AS DIRECTED BY THE ENGINEER. REMOVAL OF THE FIRST 4 INCHES OF MATERIAL SHALL BE INCLUDED IN THE BID PRICE FOR ITEM 516.10 BRIDGE EXPANSION JOINT, ASPHALTIC PLUG. ANY REMOVAL OF MATERIAL GREATER THAN 4 INCHES SHALL BE INCLUDED IN THE BID PRICE OF ITEM 580.20 RAPID SETTING CONCRETE REPAIR MATERIAL WITH COURSE AGGREGATE.

2. THE CONTRACTOR SHALL REPLACE REMOVED MATERIAL THAT IS LESS THAN 4" FROM FINISHED GRADE WITH ASPHALTIC PLUG JOINT MATERIAL MEETING THE REQUIREMENTS OF SUBSECTION 707.15. ALL REMOVED MATERIAL THAT IS GREATER THAN 4 INCHES FROM FINISHED GRADE SHALL BE REPLACED WITH RAPID SETTING CONCRETE REPAIR MATERIAL WITH COARSE AGGREGATE MEETING THE REQUIREMENTS OF SUBSECTION 780.04.

3. REINFORCING STEEL NOT SHOWN FOR CLARITY.

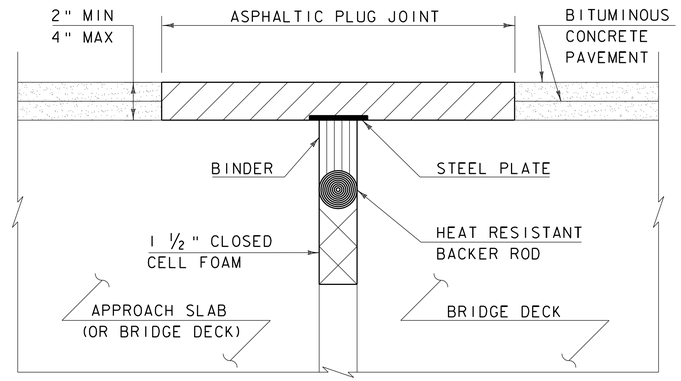

ASPHALTIC PLUG-TYPE JOINT DETAIL - NEW

(NOT TO SCALE)

ASPHALTIC PLUG JOINT NOTES

INSTALLATION:

1. LOCATE THE JOINT CENTRALLY OVER THE DECK OVERLAY EXPANSION GAP OR FIXED JOINT, MARKED OUT TO THE MANUFACTURER'S RECOMMENDED WIDTH.

2. REMOVE THE BITUMINOUS CONCRETE PAVEMENT FULL DEPTH AS SHOWN ON THE PLANS. THE PAVEMENT SHALL BE DRY AND SAW CUT TO THE LIMITS REQUIRED TO PLACE THE JOINT. A PNEUMATIC HAMMER AND CHISEL MAY BE USED ADJACENT TO THE CURB ONLY WHEN SAW CUTTING IS NOT POSSIBLE.

3. BLAST CLEAN THE JOINT AREA OF DEBRIS, ASPHALT AND SHEET MEMBRANE. THOROUGHLY DRY THE JOINT AREA WITH COMPRESSED AIR PRIOR TO APPLYING BINDER MATERIAL.

4. REPAIR MATERIAL GREATER THAN 4 INCHES FROM FINISHED GRADE WITH RAPID SETTING CONCRETE REPAIR MATERIAL WITH COARSE AGGREGATE MEETING THE REQUIREMENTS OF SUBSECTION 780.04.

5. PLACE PROPERLY SIZED HEAT RESISTANT BACKER ROD IN THE MOVEMENT GAP ALLOWING FOR 1" +/- OF BINDER ABOVE THE ROD.

6. HEAT AND PLACE THE BINDER MATERIAL AS RECOMMENDED BY THE MANUFACTURER.

7. PLACE 1/4" THICK BY 8" WIDE SECTIONS OF STEEL PLATE OVER THE CENTER OF THE MOVEMENT GAP. SECURE THE PLATES FROM MOVING BY INSERTING LOCATING PINS THROUGH THE PRE-STAMPED HOLES INTO BACKER ROD AND COVER WITH HOT BINDER. THE STEEL PLATES MAY BE OMITTED WHERE THE ENGINEER DETERMINES THAT THE APPROACH SLAB OR BRIDGE DECK WILL PROVIDE INADEQUATE SUPPORT AND WHERE VERTICAL MOVEMENT OF THE PLATES MIGHT OCCUR.

8. HEAT AND MIX THE BINDER MATERIAL AND AGGREGATE AS RECOMMENDED BY THE MANUFACTURER.

9. INSTALLATION OF MATERIAL, COMPACTION, AND TOP COATING SHALL BE AS RECOMMENDED BY THE MANUFACTURER.

10. IMMEDIATELY AFTER TOP COATING, CAST AN ANTI-SKID MATERIAL OVER THE JOINT TO REDUCE THE RISK OF TRACKING.

11. ONCE THE JOINT REACHES 82 DEG C (180 DEG F) +/-, WATER MAY BE USED TO EXPEDITE THE COOLING PROCESS.

12. PROTECT JOINT FROM TRAFFIC UNTIL THE MATERIAL HAS COOLED TO 51 DEG C (125 DEG F) +/-.

WEATHER LIMITATIONS

APPLY BINDER MATERIAL ONLY WHEN THE FOLLOWING CONDITIONS PREVAIL OR AS RECOMMENDED BY THE MANUFACTURER:

1. THE AMBIENT AIR TEMPERATURE IS AT LEAST 10 DEG C (50 DEG F) AND RISING.

2. THE ROAD SURFACE IS DRY.

3. WEATHER CONDITIONS OR OTHER CONDITIONS ARE FAVORABLE AND ARE EXPECTED TO REMAIN SO FOR THE PERFORMANCE OF SATISFACTORY WORK.

REVISIONS	
MAY 7, 2010	APPROVED FOR USE BY VAOT STRUCTURES SECTION

BRIDGE JOINT ASPHALTIC PLUG

VERMONT AGENCY OF TRANSPORTATION
STRUCTURES - DIVISION

STRUCTURES DETAIL

SD-516.10

ROADWAY TYPICALS

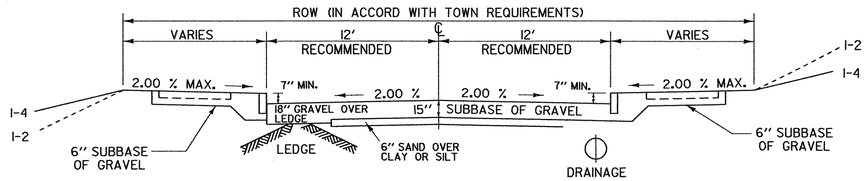

TYPICAL - CURBED SECTION WITH 5' SIDEWALKS

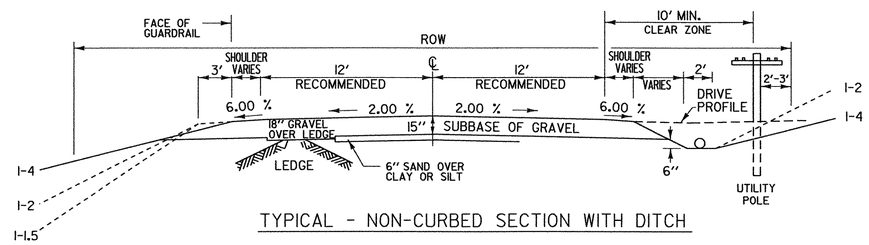

TYPICAL - NON-CURBED SECTION WITH DITCH

CUL-DE-SAC FOR DEAD END ROADS

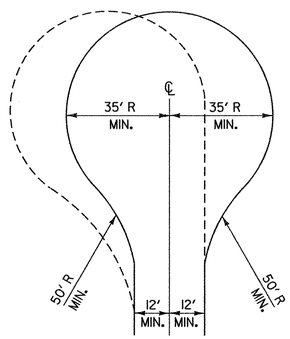

INTERSECTION OF THROUGH ROAD AND SIDE ROAD

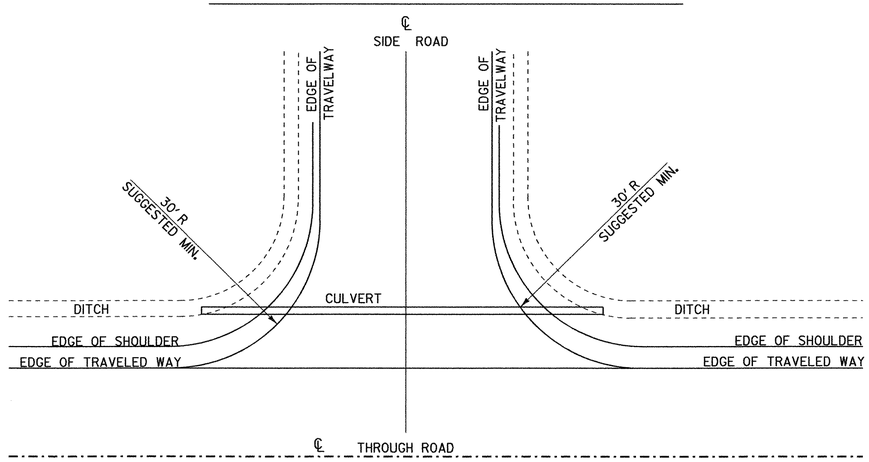

FOR THROUGH ROADS WITH SIDEWALKS & CURBING, SEE STANDARDS C2 & C3.
PROVIDE DROP INLETS ON EACH SIDE OF SIDE ROAD AT INTERSECTION AS NECESSARY.

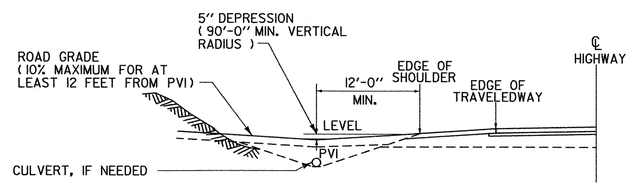

PROFILE OF INTERSECTION (CUT SECTION)
SHOWING 5" DEPRESSION

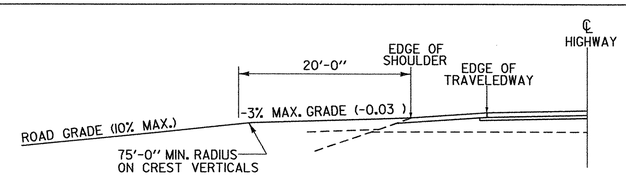

PROFILE OF INTERSECTION (FILL SECTION)

GENERAL NOTES FOR LOCAL ROADS

1. SUBBASE, SAND CUSHION AND SUBGRADE SHOULD BE CONSTRUCTED AND COMPACTED TO THE DIMENSIONS SHOWN IN ACCORDANCE WITH VAOT STANDARD SPECIFICATIONS FOR CONSTRUCTION. WHERE LOCAL ORDINANCES HAVE BEEN ADOPTED RELATIVE TO ROAD DIMENSIONS AND CONSTRUCTION, THEY SHOULD GOVERN. THE DIMENSIONS SUGGESTED ARE INTENDED TO BE APPLIED ONLY IN LOW TRAFFIC VOLUME CONDITIONS (AVERAGE DAILY TRAFFIC LESS THAN 250 VEHICLES PER DAY), AND WHERE HEAVY TRUCK TRAFFIC IS INFREQUENT.

2. EXPOSED EARTH SLOPES SHOULD BE SEEDED, FERTILIZED AND MULCHED IN ACCORDANCE WITH VAOT STANDARD SPECIFICATIONS FOR CONSTRUCTION.

3. DRAINAGE:

   ROADWAY - 18" MINIMUM DIAMETER, OF METAL, REINFORCED CONCRETE OR POLYETHYLENE PIPE, WITH DROP INLETS OR CATCH BASINS, AS REQUIRED. HYDRAULIC ANALYSIS TO DETERMINE APPROPRIATE PIPE DIAMETER IS RECOMMENDED FOR ALL LIVE STREAM CROSSINGS AND ELSEWHERE WHERE LARGE STORM FLOWS MAY BE EXPECTED.

   DRIVES - 15" MINIMUM DIAMETER, OF METAL, REINFORCED CONCRETE OR POLYETHYLENE PIPE.

   UNDERDRAIN - 6" MINIMUM DIAMETER, OF METAL, PVC PLASTIC OR POLYETHYLENE PIPE.

   LOCATION, DEPTH AND CONSTRUCTION DETAILS SHOULD FOLLOW PRACTICE SPECIFIED BY LOCAL ORDINANCE OR THE VAOT STANDARD SPECIFICATIONS FOR CONSTRUCTION.

4. HORIZONTAL CURVATURE - THE FOLLOWING WILL APPLY:

DESIGN SPEED	MINIMUM RADII RURAL (1)	MINIMUM RADII URBAN (2)
25 MPH	185 FT.	180 FT.
30 MPH	275 FT.	300 FT.
35 MPH	380 FT.	460 FT.
40 MPH	510 FT.	675 FT.
45 MPH	660 FT.	945 FT.
50 MPH	835 FT.	1280 FT.

(1) BASED ON CROSS SLOPE = 6.0 %

(2) BASED ON MAINTAINING NORMAL CROWN SECTION THROUGHOUT CURVE : EFFECTIVE CROSS SLOPE = 2.0 %

FOR OTHER SUPERELEVATION RATES, SEE CHAPTER III OF THE AASHTO "A POLICY ON GEOMETRIC DESIGN OF HIGHWAYS AND STREETS" FOR APPROPRIATE CURVE RADII.

5. GRADIENT OF ROADS - 10% MAXIMUM GRADE SUGGESTED, ALTHOUGH GRADES UP TO 16 % MAY BE ALLOWED IN MOUNTAINOUS TERRAIN.

6. GUARD RAIL - PROVIDE GUARD RAIL WITH TREATED WOOD OR STEEL POSTS, OF A DESIGN IN ACCORDANCE WITH VAOT STANDARD SPECIFICATIONS FOR CONSTRUCTION, THE AASHTO ROADSIDE DESIGN GUIDE, AND VAOT STANDARD DRAWINGS. GENERALLY, WHERE SLOPES ARE 1:3 OR STEEPER, AND THE HEIGHT OF DROPOFF AT EDGE OF SHOULDER EXCEEDS 5', GUARD RAIL SHOULD BE INSTALLED. ALSO, WHERE SLOPES ARE 1:3 OR FLATTER, GUARD RAIL MAY NOT BE NEEDED IF THE AREA AT THE BOTTOM OF THE SLOPE IS FREE OF HAZARDS. THE LOCAL VAOT DISTRICT TRANSPORTATION ADMINISTRATOR MAY BE CONTACTED FOR ASSISTANCE.

7. PAVING - ROADS WITH GRADES EXCEEDING 7% SHOULD BE PAVED UNLESS WAIVED BY THE LOCAL GOVERNING BODY. FOR TRAFFIC VOLUMES GREATER THAN, OR EQUAL TO, 250 VEHICLES PER DAY, OR WHERE HEAVY TRUCKS ARE COMMON, A PAVEMENT DESIGN SHOULD BE PERFORMED TO DETERMINE APPROPRIATE THICKNESSES OF SUBBASE AND PAVEMENT.

8. TRAVELED WAY AND SHOULDER WIDTHS - WIDTHS SHOWN ON THIS STANDARD ARE FOR LOW SPEED/LOW TRAFFIC VOLUME CONDITIONS. FOR ADDITIONAL GUIDANCE IN THE DESIGN OF LOCAL ROADS AND STREETS, SEE THE LATEST EDITION OF AASHTO'S PUBLICATION "A POLICY ON GEOMETRIC DESIGN OF HIGHWAYS AND STREETS", OR THE VAOT "VERMONT STATE STANDARDS".

9. UTILITY LINE LOCATION TO CONFORM TO LOCAL REQUIREMENTS.

REVISIONS AND CORRECTIONS

JAN. 21, 1971 - ORIGINAL DATE OF ISSUE
MAR. 12, 1971 - DIMENSIONS CHANGED ON TURN-A-ROUND
JULY 13, 1973 - INTERSECTION PROFILES ADDED
DEC. 7, 1993 - REVISED TO REFLECT CURRENT DESIGN CRITERIA
JUNE 1, 1994 - REISSUED, WITHOUT CHANGE, UNDER NEW SIGNATURES.
MAR. 10, 1995 - REISSUED, WITHOUT CHANGE, UNDER NEW SIGNATURES.
MARCH 3, 2003 - REVISED TO REFLECT CURRENT DESIGN CRITERIA

APPROVED

DIRECTOR OF PROGRAM DEVELOPMENT

C. Allen Wright
CHIEF OF UTILITIES

FEDERAL HIGHWAY ADMINISTRATION

STANDARDS FOR TOWN & DEVELOPMENT ROADS

VERMONT AGENCY OF TRANSPORTATION

STANDARD A-76

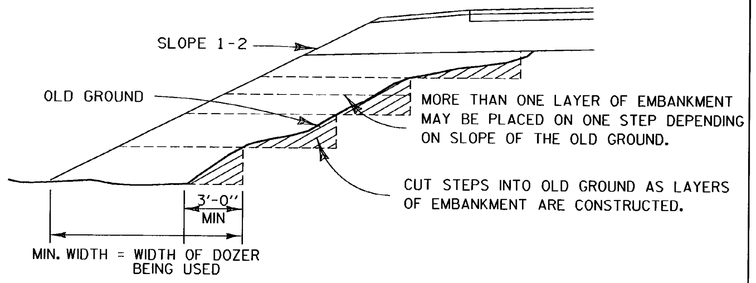

METHOD FOR CONSTRUCTING AN EMBANKMENT ON EARTH SLOPE

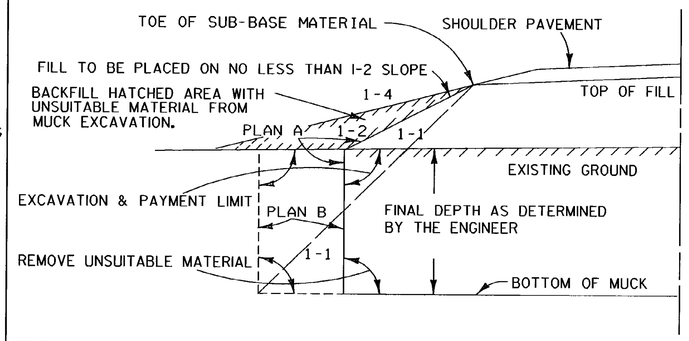

GENERAL NOTES :

THE MUCK OR UNSUITABLE MATERIAL SHALL BE EXCAVATED TO THE NEAT LINES SHOWN ON THE PLANS OR AS DETERMINED BY THE ENGINEER.

EXCAVATION AND PAYMENT LIMIT WILL BE DETERMINED FROM EITHER PLAN "A" OR PLAN "B", WHICHEVER PRODUCES THE GREATER WIDTH IN A GIVEN MUCK AREA.

BACKFILL MATERIAL MUST MEET THE REQUIREMENTS SET FORTH UNDER MUCK EXCAVATION,SECTION 203

TYPICAL NEAT PAY LINES FOR MUCK EXCAVATION

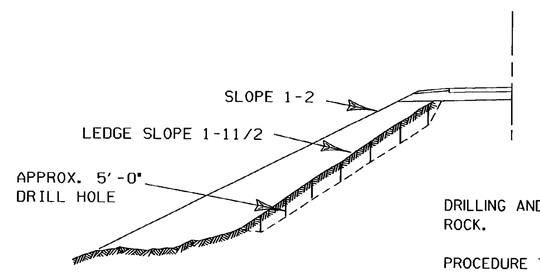

DRILL PATTERN

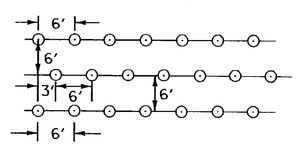

DRILLING AND BLASTING OF SOLID ROCK.

PROCEDURE TO BE FOLLOWED WHEN LEDGE SLOPE ON OLD GROUND IS BETWEEN A 1-1 AND A 1-5 SLOPE.

ALL HOLES TO BE APPROXIMATELY 5'-0" DEEP. HOLES TO BE IN ROWS, SPACED AND STAGGERED AS SHOWN IN DRILL PATTERN, OR AS DIRECTED BY THE ENGINEER, SEE SECTION 205

A METHOD FOR PREPARING LEDGE SLOPE BEFORE CONSTRUCTING AN EMBANKMENT

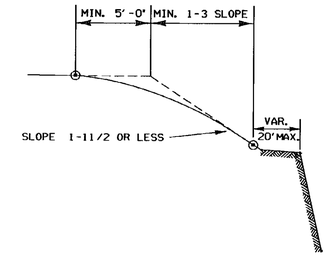

EARTH SECTIONS ABOVE STABLE ROCK OR EQUIVILENT OUTCROPS TO BE ROUNDED, AS FAR AS POSSIBLE AS THOUGH TOTAL HEIGHT OF SLOPE WAS IN EARTH CUT.

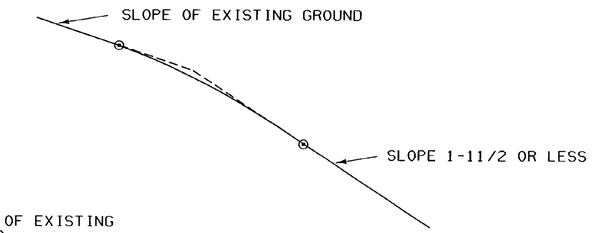

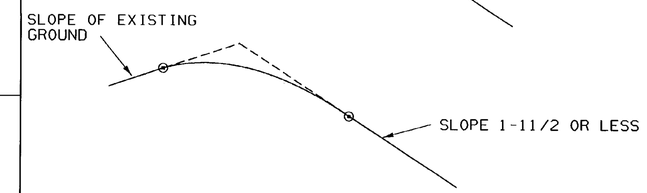

SLOPES TO BE ROUNDED AS SHOWN IN ORDER TO ALLOW FOR PERSPECTIVE FORESHORTENING AS SEEN FROM THE ROAD AND SO THAT FINISHED SLOPES WILL BETTER SUPPORT VEGETATIVE COVER.

ROUNDING TO MERGE WITH EXISTING GROUND SURFACE SO THAT NO HARD GRADE LINE WILL REMAIN WITHIN THE LINE OF SIGHT

WHEN STEEPNESS OF EXISTING GROUND OR PRESENCE OF EXISTING VEGETATION IS CONSIDERED A FACTOR PREVENTING NORMAL ROUNDING, THE EXTENT OF THE ROUNDING SHOULD BE MODIFIED TO MEET CONDITIONS.

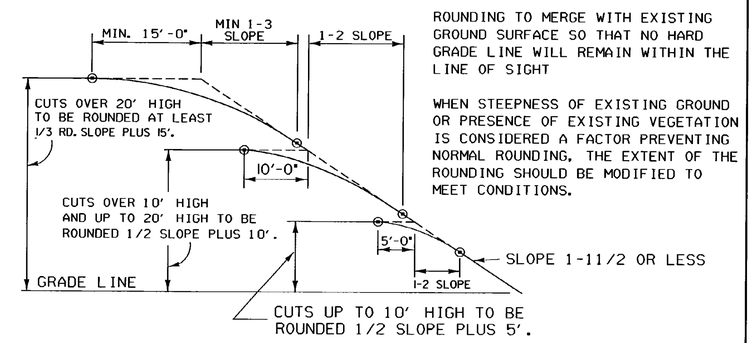

TYPICAL SLOPE ROUNDING

REVISIONS AND CORRECTIONS

DEC. 6, 1971 - ORIGINAL APPROVAL DATE

JUNE 1, 1994 - REISSUED, WITHOUT CHANGE, UNDER NEW SIGNATURES.

APPROVED

APPROVED FOR THIS PROJECT AND/OR DESIGN IMPLEMENTATION. FHWA FINAL APPROVAL PENDING.

Gordon B. McArthur, P.E.
DIRECTOR OF ENGINEERING

Peter M. Murphy, P.E.
DESIGN ENGINEER

EMBANKMENT ON EARTH SLOPE
EMBANKMENT ON ROCK SLOPE
MUCK EXCAVATION
TYPICAL SLOPE ROUNDING

VERMONT AGENCY OF TRANSPORTATION

STANDARD

B-5

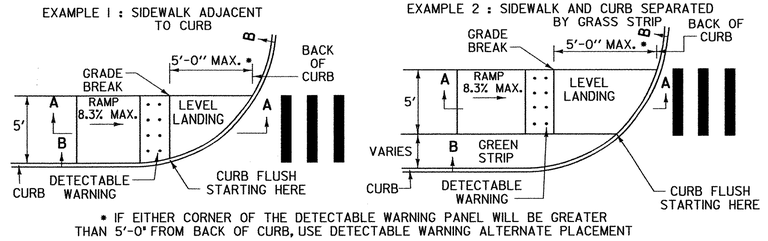

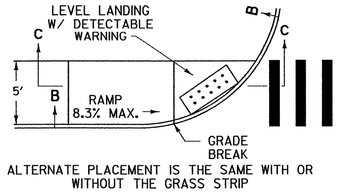

EXAMPLE 1 & 2 DETECTABLE WARNING ALTERNATE PLACEMENT

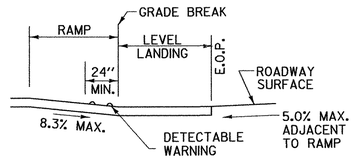

SECTION A-A

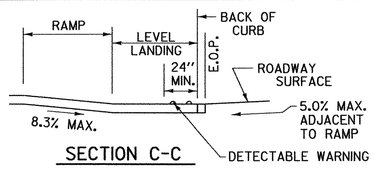

SECTION C-C

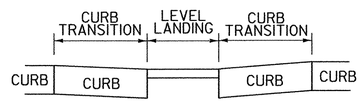

SECTION B-B

SIDEWALK RAMP TYPE 1

SINGLE WALK-STRAIGHT APPROACH TO PARALLEL RAMP.

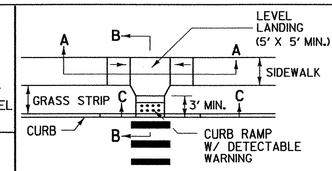

SIDEWALK RAMP TYPE 2

SINGLE PERPENDICULAR RAMP FROM LEVEL LANDING TANGENT SECTION

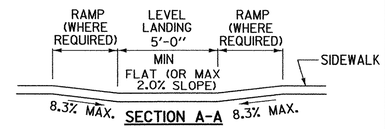

SECTION A-A

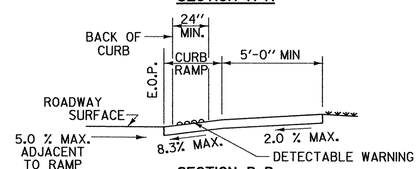

SECTION B-B

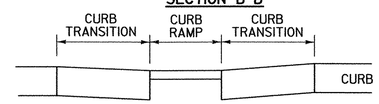

SECTION C-C

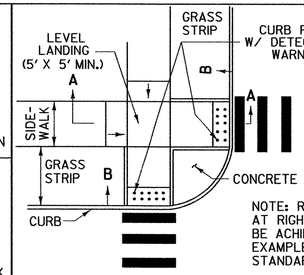

NOTE: RAMPS MUST INTERSECT CURB AT RIGHT ANGLE. IF THIS CANNOT BE ACHIEVED, USE RAMP TYPE 6, EXAMPLE 3 SHOWN ON VAOT STANDARD DRAWING C-3B.

SIDEWALK RAMP TYPE 3

TWO PERPENDICULAR RAMPS FROM LEVEL LANDING

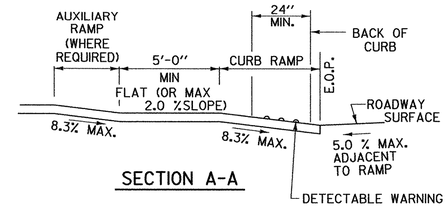

SECTION A-A

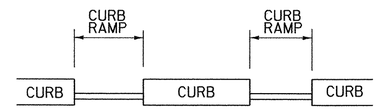

SECTION B-B (ALONG FACE OF CURB)

GENERAL NOTES:

1. THE DIMENSIONS AND GRADES SHOWN ON THIS STANDARD WILL BE ADHERED TO IN THE DESIGN AND THE CONSTRUCTION OF SIDEWALK RAMPS. WHERE SIDEWALKS RUN ADJACENT TO ROADWAYS ON STEEP (5% OR GREATER) GRADES, RAMP GRADES WILL BE AS FLAT AS POSSIBLE. (ON LOW SIDE OF DRIVES AND INTERSECTING SIDE STREETS, RAMPS SHALL SLOPE TOWARDS DRIVE OR SIDE STREET @ 2%)
2. NOMINAL RAMP DIMENSIONS AND GRADES:
   RAMP WIDTH - 4'-0" MINIMUM
   RAMP SLOPE - 8.3% MAXIMUM
   FLARE SLOPE - 10% MAXIMUM
   RAMP CROSS SLOPE - 2.0% MAXIMUM
3. A LEVEL LANDING (NO GREATER THAN 2.0% SLOPE IN ANY DIRECTION) SHALL BE PROVIDED AT THE TOP OF SIDEWALK RAMPS TO ALLOW FOR STOPPING AND MANEUVERING OF WHEELCHAIRS.
4. LEVEL LANDINGS (NO GREATER THAN 2.0% SLOPE IN ANY DIRECTION) AT THE BOTTOM OF PERPENDICULAR RAMPS SHALL BE WHOLLY CONTAINED WITHIN MARKED CROSSWALKS.
5. DUMMY JOINTS SHALL BE PROVIDED AT TRANSITIONS (GRADE CHANGES) AT TOPS AND BOTTOMS OF RAMPS AND FLARES.
6. VERTICAL DROP-OFF EDGES TO RAMPS WILL NOT BE BUILT UNLESS THE RAMP ABUTS AN AREA WHICH WILL NOT BE USED BY PEDESTRIANS.
7. NO VERTICAL "LIP" OR "CURB REVEAL" WILL BE PROVIDED WHERE THE RAMP ADJOINS THE ROADWAY.
8. AT MARKED CROSSWALKS, THE FULL WIDTH OF THE RAMP OR LANDING SHALL BE CONTAINED WITHIN THE PAVEMENT MARKINGS.
9. WHERE POSSIBLE, RAMP FLARES SHOULD BE LOCATED OUTSIDE THE DIRECT LINE OF TRAVEL MOST LIKELY TO BE FOLLOWED BY THE VISUALLY IMPAIRED.
10. SIGNS, POLES, PLANTERS, MAILBOXES, ETC. SHALL NOT BE LOCATED WHERE THEY WILL INTERFERE WITH THE USE OF SIDEWALK RAMPS.
11. WHERE POSSIBLE, SIDEWALK RAMPS SHOULD NOT BE LOCATED WHERE USERS MUST CROSS DROP INLET GRATES, MANHOLE COVERS OR OTHER ACCESS LIDS. IF THIS CANNOT BE AVOIDED THEN GRATE DESIGN AND PLACEMENT SHALL CONFORM TO ADA REQUIREMENTS.
12. CURB DRAINAGE SHOULD BE CONSTRUCTED SO AS TO PRECLUDE THE FLOW OF WATER PAST THE SIDEWALK RAMP.
13. WHEREVER FEASIBLE, TWO SIDEWALK RAMPS ARE RECOMMENDED IN PREFERENCE TO A SINGLE RAMP.
14. JOINTS WILL BE CONSTRUCTED IN ACCORDANCE WITH CURRENT SIDEWALK SPECIFICATIONS, HOWEVER EXPANSION JOINTS WITHIN THE SIDEWALK RAMP AREA WILL BE AVOIDED WHEREVER POSSIBLE.
15. SIDEWALKS THAT ARE LESS THAN 5' WIDE REQUIRE 5' WIDE BY 5' LONG PASSING AREAS (NO GREATER THAN 2.0% CROSS SLOPE) AT INTERVALS NOT TO EXCEED 200 FEET.
16. E.O.P. = EDGE OF PAVEMENT
17. THE PUBLIC SIDEWALK CURB RAMP STANDARDS DEPICTED HERE MAY NOT BE APPROPRIATE FOR ALL LOCATIONS. FIELD CONDITIONS AT INDIVIDUAL LOCATIONS MAY REQUIRE SPECIFIC DESIGNS. DESIGNS MUST BE CONSISTENT WITH THE PROVISIONS OF THIS SHEET TO THE MAXIMUM EXTENT FEASIBLE ON ALTERATION PROJECTS AND WHEN STRUCTURALLY PRACTICABLE ON NEW CONSTRUCTION PROJECTS AS REQUIRED BY THE AMERICANS WITH DISABILITIES ACT ACCESSIBILITY GUIDELINES.

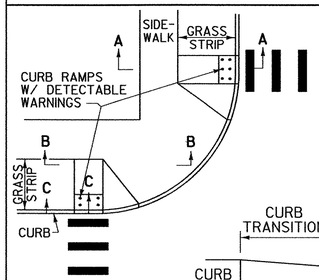

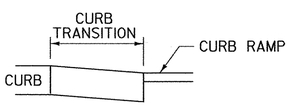

SECTION C-C

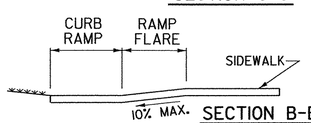

SECTION B-B

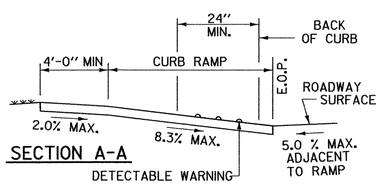

SECTION A-A

SIDEWALK RAMP TYPE 4

RAMP OFFSET FROM DIRECT LINE OF PEDESTRIAN TRAVEL

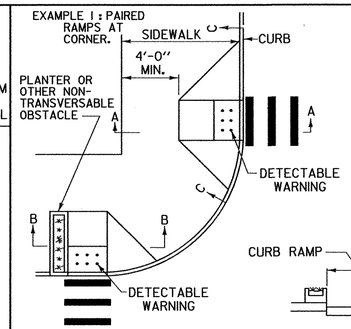

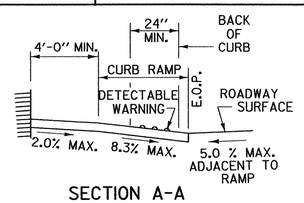

SECTION A-A

SIDEWALK RAMP TYPE 5

PERPENDICULAR RAMP IN URBAN SETTING - WIDE SIDEWALK

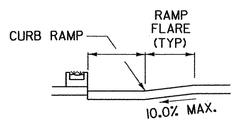

SECTION B-B

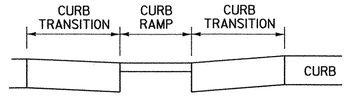

SECTION C-C

EXAMPLE 2 : SINGLE RAMP ON CORNER RADIUS.

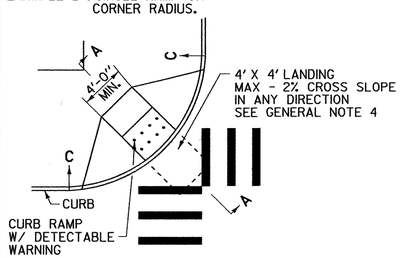

EXAMPLE 3 : RAMP ON TANGENT SECTION

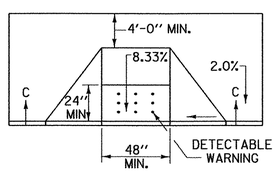

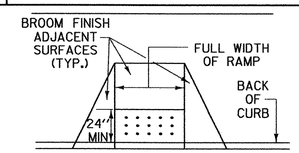

DETECTABLE WARNING PLACEMENT

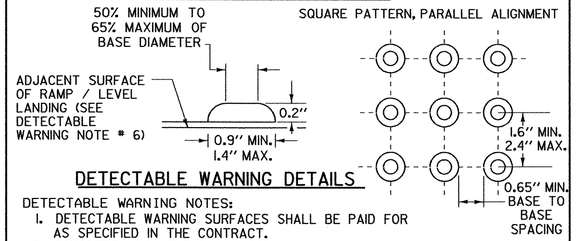

DETECTABLE WARNING DETAILS

DETECTABLE WARNING NOTES:

1. DETECTABLE WARNING SURFACES SHALL BE PAID FOR AS SPECIFIED IN THE CONTRACT.
2. CONCRETE ADJACENT TO ALL DETECTABLE WARNINGS SHALL HAVE A BROOM FINISH.
3. THE COLOR OF THE DETECTABLE WARNING SHALL PROVIDE A VISUAL CONTRAST TO THE SURROUNDING SURFACE AND SHALL BE AS SPECIFIED IN THE CONTRACT.
4. WHERE FEASIBLE, TRUNCATED DOMES SHALL BE ALIGNED ON A SQUARE GRID IN THE PREDOMINANT DIRECTION OF PEDESTRIAN TRAVEL.
5. WHERE A RAMP OR LEVEL LANDING MEETS A CURB RADIUS, ALIGN THE EDGE OF THE DETECTABLE WARNING AREA PARALLEL TO THE CURB TO THE MAXIMUM EXTENT FEASIBLE.
6. FOR SURFACE APPLIED TRUNCATED DOME PRODUCTS, A MAXIMUM 0.25" VERTICAL CHANGE IN ELEVATION IS ALLOWED. FOR CHANGES IN ELEVATION BETWEEN 0.25" AND 0.50", A BEVEL WITH A MAXIMUM 1:2 SLOPE IS REQUIRED. CHANGES IN ELEVATION GREATER THAN 0.50" MUST BE TREATED AS A RAMP-8.3% MAXIMUM SLOPE.
7. IF ANY PORTION OF THE EDGE OF THE DETECTABLE WARNING CLOSEST TO THE CURB WILL BE GREATER THAN 5'-0" FROM THE BACK OF CURB, THEN THE PANEL(S) SHALL BE LOCATED ON THE LEVEL LANDING AS CLOSE TO PARALLEL TO THE CURB LINE AS POSSIBLE.

DETECTABLE WARNING DETAILS

OTHER STANDARDS REQUIRED: C-2A, C-2B, C-3B AND C-10

REVISIONS AND CORRECTIONS

FEB. 2, 2004 - DATE OF ORIGINAL ISSUE
SEPT. 1, 2004 - MINOR REVISIONS TO COMPLY WITH ADAAG
MAR. 10, 2008 - MINOR REVISIONS TO COMPLY WITH ADA STANDARDS

APPROVED

LOCAL TRANSPORTATION FACILITIES PROGRAM MANAGER

DIRECTOR OF PROGRAM DEVELOPMENT

FEDERAL HIGHWAY ADMINISTRATION

SIDEWALK RAMPS

VERMONT AGENCY OF TRANSPORTATION

STANDARD

C-3A

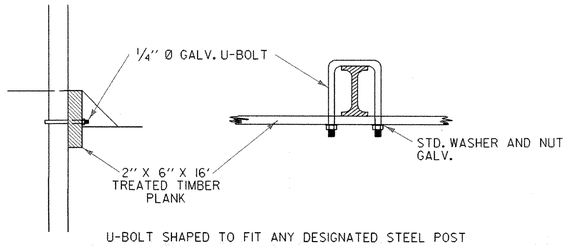

U-BOLT SHAPED TO FIT ANY DESIGNATED STEEL POST

WITH STEEL POSTS

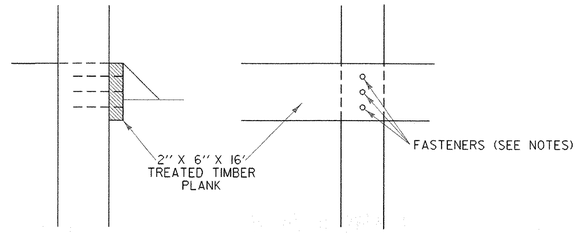

WITH WOOD POSTS (EXISTING CONDITION)

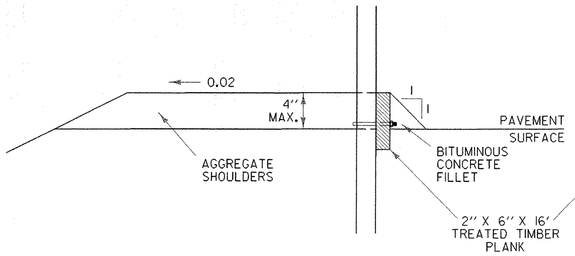

BITUMINOUS CONCRETE FILLET DETAIL

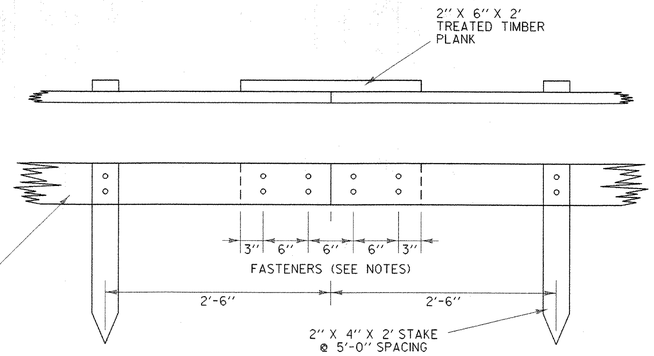

SPLICE DETAIL

TREATED TIMBER CURB

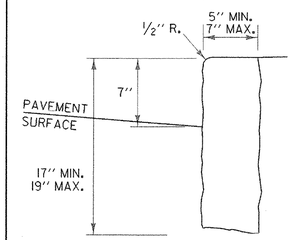

VERTICAL GRANITE CURB

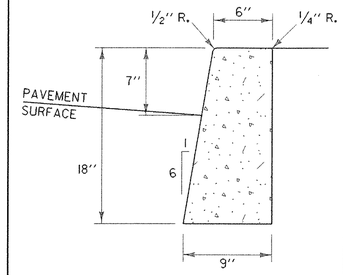

CAST IN PLACE CONCRETE CURB, TYPE B

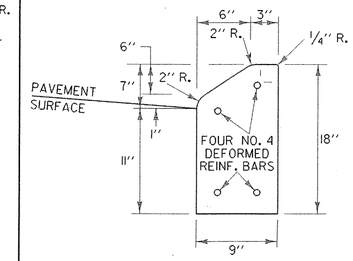

PRECAST REINFORCED CONCRETE CURB, TYPE A

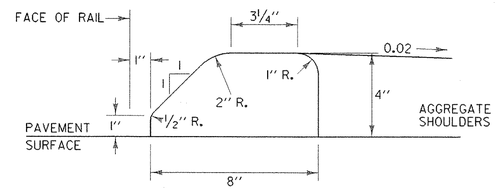

USE ONLY WITH STEEL BEAM GUARDRAIL

BITUMINOUS CONCRETE CURB, TYPE A

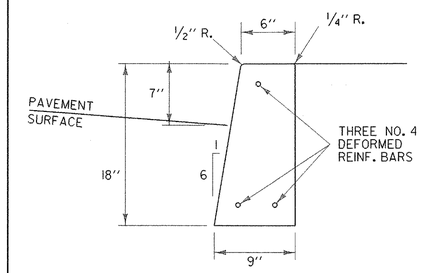

PRECAST REINFORCED CONCRETE CURB, TYPE B

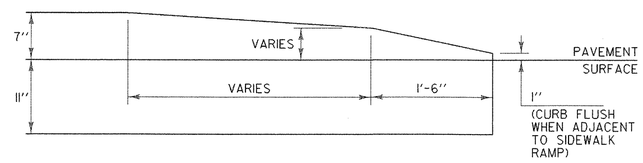

CONCRETE CURB END

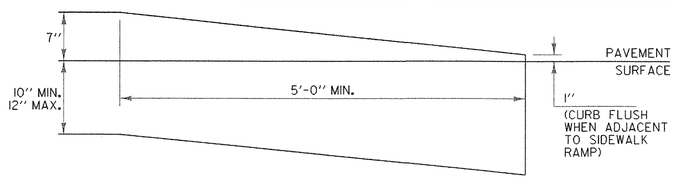

VERTICAL GRANITE CURB END

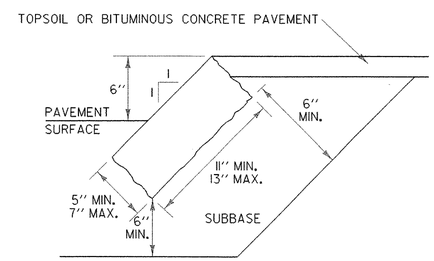

EDGING TO BE PLACED PRIOR TO PLACING TOP SURFACE COURSE.

GRANITE SLOPE EDGING

GENERAL NOTES:

1. HEIGHT OF REVEAL OF CURB SHALL NOT EXCEED FOUR INCHES WHERE DESIGN OR POSTED SPEED IS EQUAL TO OR GREATER THAN 40 MPH AND WHEN INSTALLED WITH GUARDRAIL (STANDARD SHAPE TO BE BURIED TO THIS DEPTH).
2. WHEN CONCRETE SIDEWALK IS CONSTRUCTED ADJACENT TO CONCRETE OR VERTICAL GRANITE CURB, ASPHALT TREATED FELT SHALL BE PLACED BETWEEN THE SIDEWALK AND CURB FOR THE TOTAL DEPTH OF THE SIDEWALK.
3. FASTENERS (20d NAILS OR SCREWS) SHALL BE CORROSION RESISTANT TO THE TREATED LUMBER.
4. FOR SPECIFICATIONS FOR EXPANSION/CONTRACTION JOINTS AND LENGTHS OF SECTIONS, SEE SECTION 616.
5. JOINTS BETWEEN CURB SECTIONS SHALL BE MORTARED IN CONFORMANCE WITH SECTION 616.
6. BITUMINOUS CONCRETE AND TREATED TIMBER CURB SHALL BE IN CONFORMANCE WITH SECTION 616.
7. TWO INCH MINIMUM CLEARANCE FROM FACE OF CONCRETE TO EDGE OF REINFORCING STEEL.

OTHER STDS. REQUIRED: **NONE**

REVISIONS AND CORRECTIONS

FEB. 11, 2008 - ORIGINAL APPROVAL DATE

APPROVED

Kevin S. Marshia
ROADWAY, TRAFFIC & SAFETY ENGINEER

DIRECTOR OF PROGRAM DEVELOPMENT

Mark D. Richter
FEDERAL HIGHWAY ADMINISTRATION

CURBING

VERMONT AGENCY OF TRANSPORTATION

STANDARD

C-10

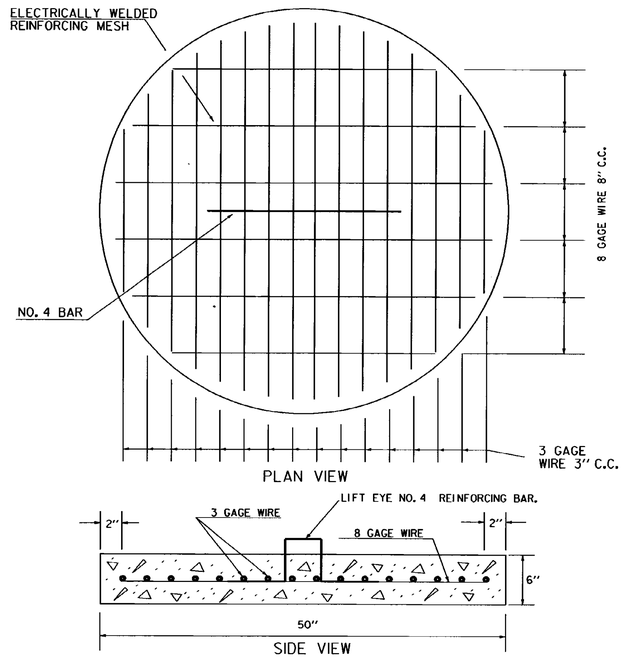

PRECAST REINFORCED CONCRETE BASE

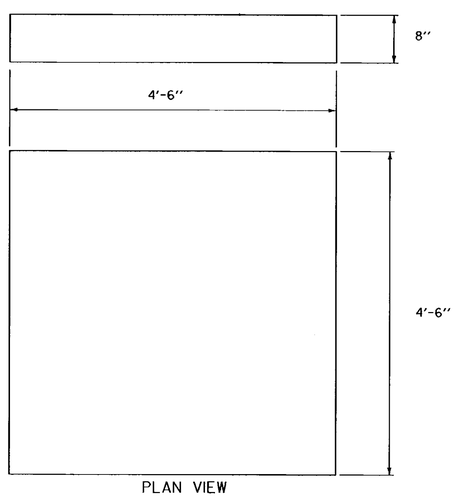

DROP INLET PIPE BASE CAST IN PLACE
(CONCRETE CONFORMING TO STRUCTURAL CONCRETE CLASS B)

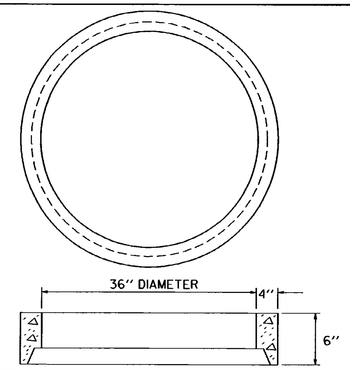

PRECAST REINFORCED CONCRETE PIPE RISER

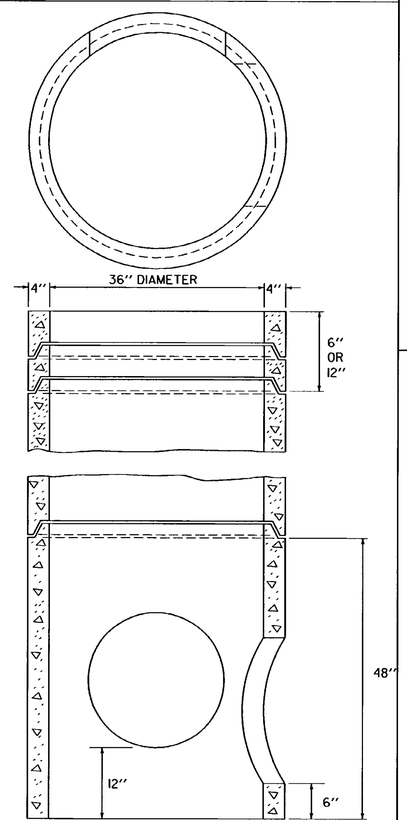

PIPE SECTIONS FOR DROP INLETS

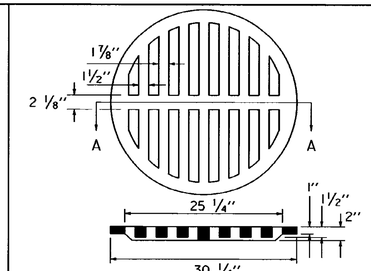

SECTION A-A
CAST IRON GRATE

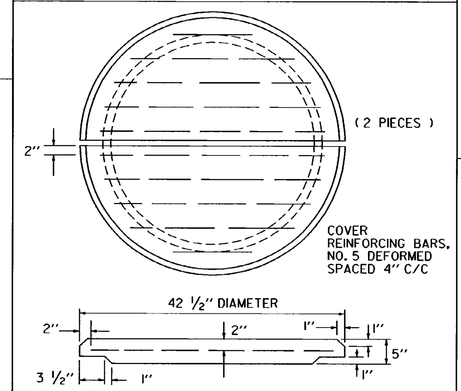

PRECAST REINFORCED CONCRETE COVER

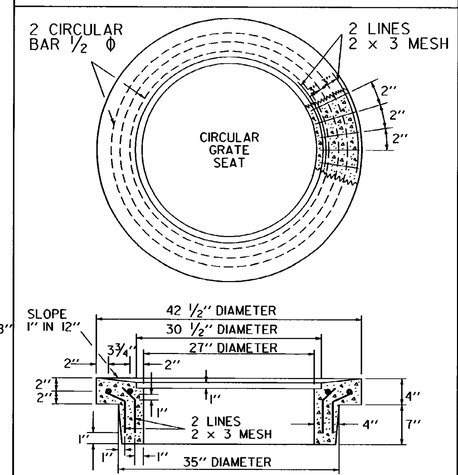

PRECAST REINFORCED CONCRETE RING FOR GRATE

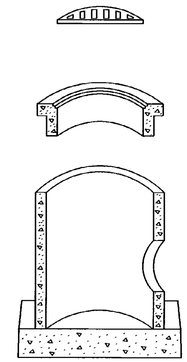

PRECAST REINFORCED CONCRETE PIPE DROP INLET WITH CAST IRON GRATE

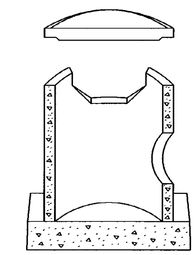

PRECAST REINFORCED CONCRETE PIPE DROP INLET WITH CONCRETE COVER

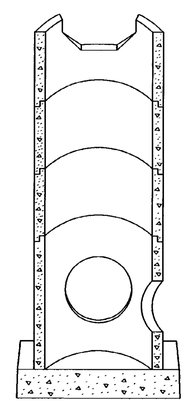

PRECAST REINFORCED CONCRETE PIPE DROP INLET WITH THROATED RISER

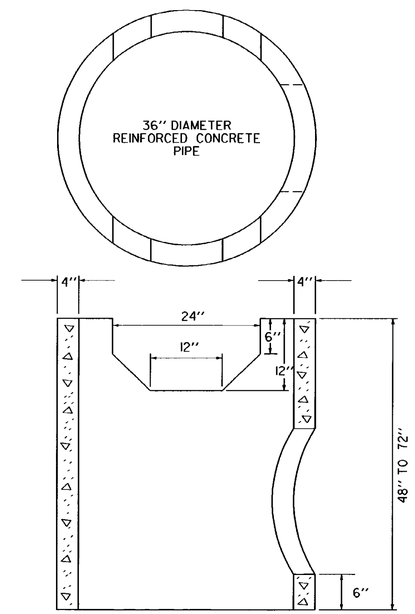

PRECAST REINFORCED CONCRETE PIPE DROP INLET WITH THROAT

NOTE :
THESE DROP INLETS SHOULD NOT BE USED IN AREAS OF VEHICULAR TRAFFIC OR IN BENCHES ON CUT SLOPES

REVISIONS AND CORRECTIONS

DEC. 6, 1971 - ORIGINAL APPROVAL DATE
JUNE 1, 1994 - REISSUED, WITHOUT CHANGE, UNDER NEW SIGNATURES.

APPROVED

APPROVED FOR THIS PROJECT AND/OR DESIGN IMPLEMENTATION. FHWA FINAL APPROVAL PENDING.

Gordon S. MacArthur, P.E.
DIRECTOR OF ENGINEERING

Robert D. Murphy, P.E.
DESIGN ENGINEER

PRECAST REINFORCED CONCRETE PIPE DROP INLET WITH CAST IRON GRATE

PRECAST REINFORCED CONCRETE PIPE DROP INLET WITH CONCRETE COVER

VERMONT AGENCY OF TRANSPORTATION

STANDARD

D-1

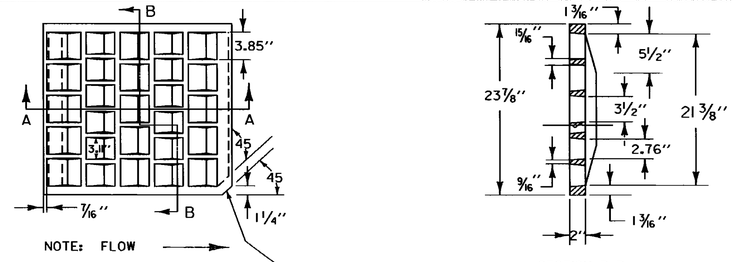

SECTION B-B

SECTION A-A

NOTE: THIS CORNER LEFT OFF FOR "RIGHT" GRATE DIAGONALLY OPPOSITE CORNER FOR "LEFT" GRATE TO FIT IN KEYED FRAMES.

THIS CORNER LEFT OFF FOR "RIGHT" GRATE, DIAG. OPPOSITE CORNER FOR "LEFT" GRATE, TO FIT IN KEYED FRAMES.

TYPE "E" GRATE
(NOT TO SCALE)

NOTE: ALTERNATE TYPE E GRATE BELOW

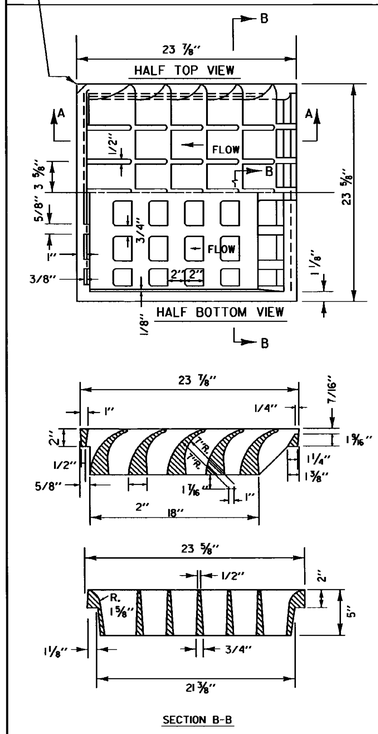

SECTION B-B

CAST IRON GRATE
TYPE E

NOTE: THIS FRAME TO BE PLACED IN DROP INLET TOP BEFORE CONCRETE IS POURED.

4 FLANGES UNLESS OTHERWISE INDICATED.

FRAMES TO BE FURNISHED WITH 3 FLANGES WHEH USED IN CONJUNCTION WITH CURB OR AS DIRECTED BY THE ENGINEER.

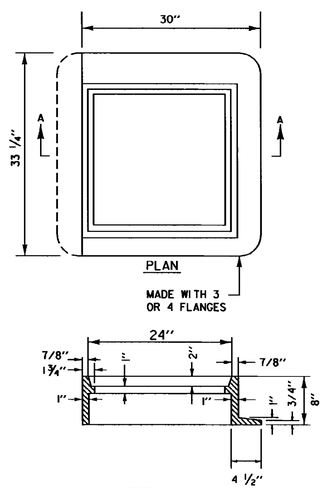

SECTION A-A

FRAME
FOR
TYPE D OR TYPE E
GRATE

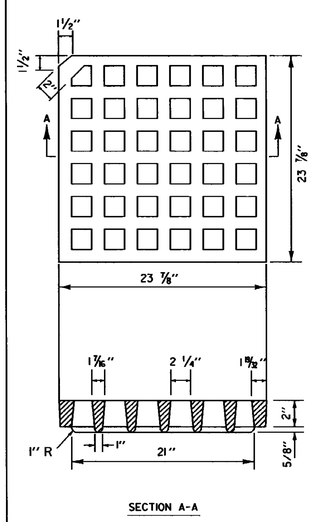

SECTION A-A

CAST IRON GRATE
TYPE D

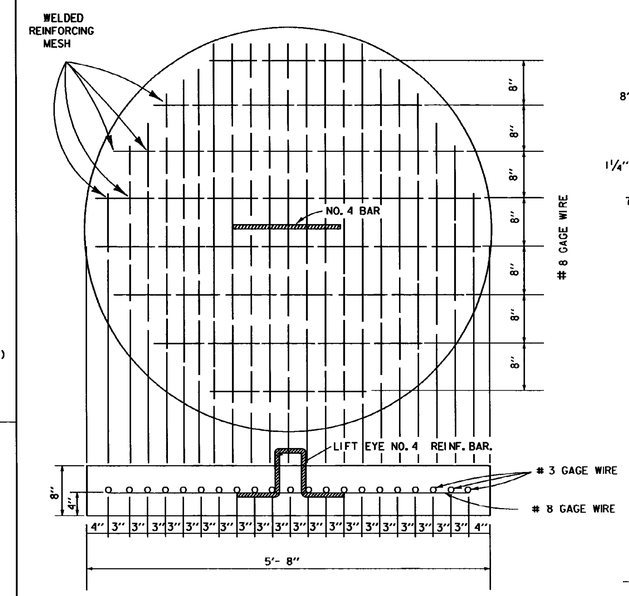

PRECAST REINFORCED CONCRETE BASE

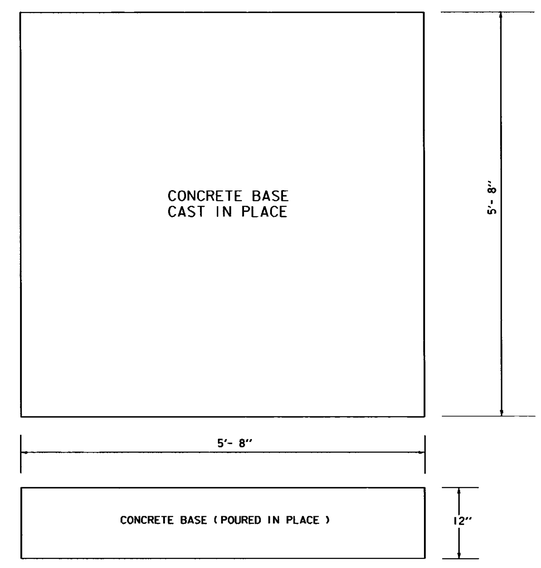

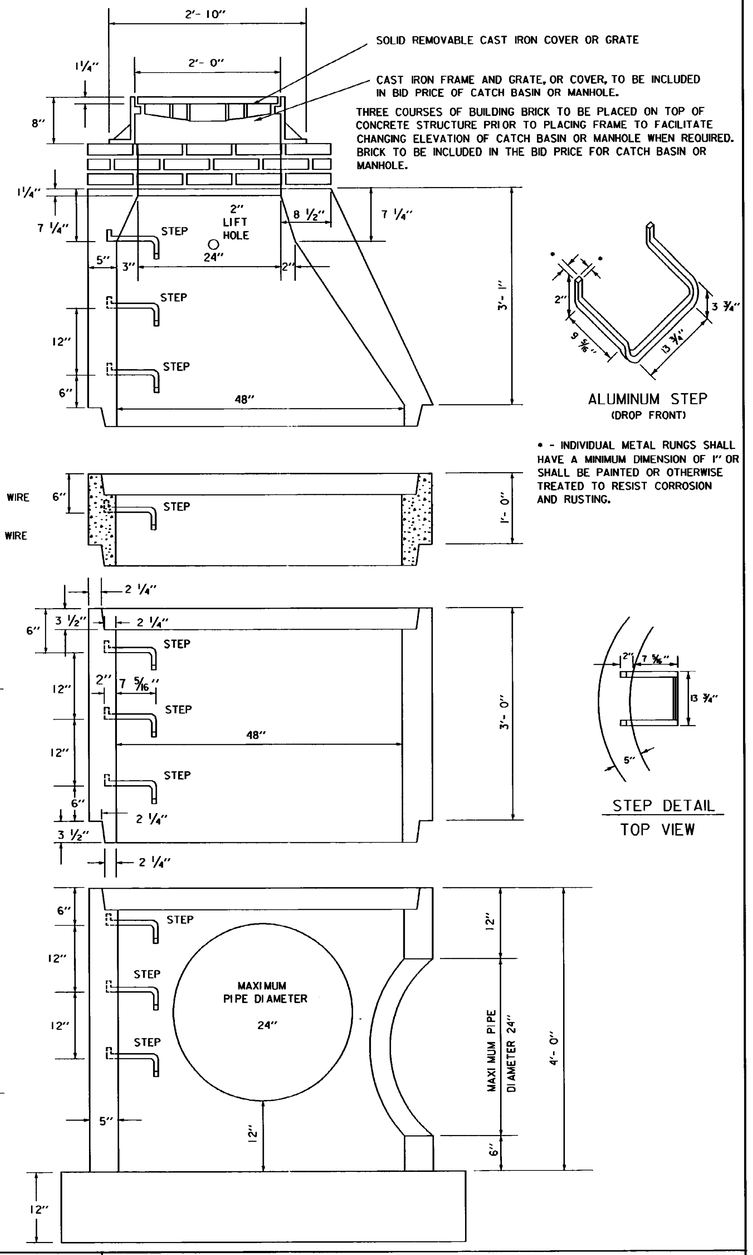

ALUMINUM STEP
(DROP FRONT)

* - INDIVIDUAL METAL RUNGS SHALL HAVE A MINIMUM DIMENSION OF 1" OR SHALL BE PAINTED OR OTHERWISE TREATED TO RESIST CORROSION AND RUSTING.

STEP DETAIL
TOP VIEW

REVISIONS AND CORRECTIONS

DEC. 6, 1971 - ORIGINAL APPROVAL
OCT. 22, 1976 - CAST IRON GRATE WITH FRAME, TYPE E ADDED
OCT. 6, 1978 - TYPE D GRATE ADDED
OCT. 30, 1985 - IMPERFECT TRENCH DETAILS DELETED
FEB. 17, 1993 - SECOND CAST IRON GRATE TYPE E ADDED.
MAR. 23, 1994 - ADDED NOTE FOR STEP DETAILS
JUNE 1, 1994 - REISSUED, WITHOUT CHANGE, UNDER NEW SIGNATURES.

APPROVED

APPROVED FOR THIS PROJECT AND/OR DESIGN IMPLEMENTATION. FHWA FINAL APPROVAL PENDING.

DIRECTOR OF ENGINEERING

DESIGN ENGINEER

PRECAST REINFORCED CONCRETE CATCH BASIN W/ CAST IRON GRATE
PRECAST REINFORCED CONCRETE MANHOLE W/ CAST IRON COVER

CAST IRON GRATE WITH FRAME, TYPE D
CAST IRON GRATE WITH FRAME, TYPE E

VERMONT AGENCY OF TRANSPORTATION

STANDARD
D-15

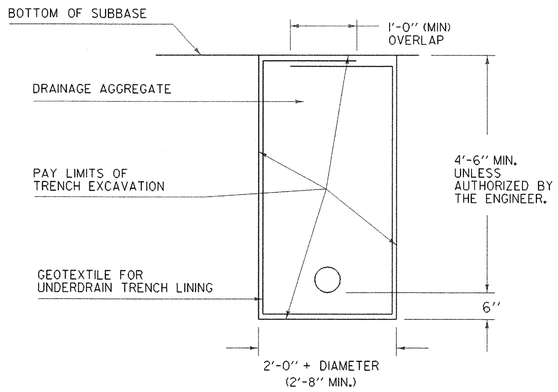

DRAINAGE AGGREGATE SHALL MEET THE REQUIREMENTS OF SECTION 704.

UNDERDRAIN

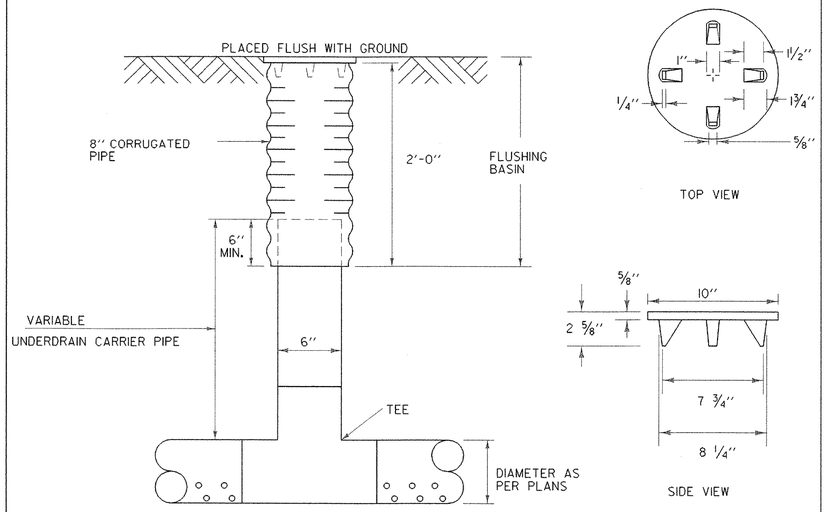

A FLUSHING BASIN AT THE BEGINNING OF A RUN SHALL BE A 90° ELBOW.

CAST IRON COVER

UNDERDRAIN FLUSHING BASIN

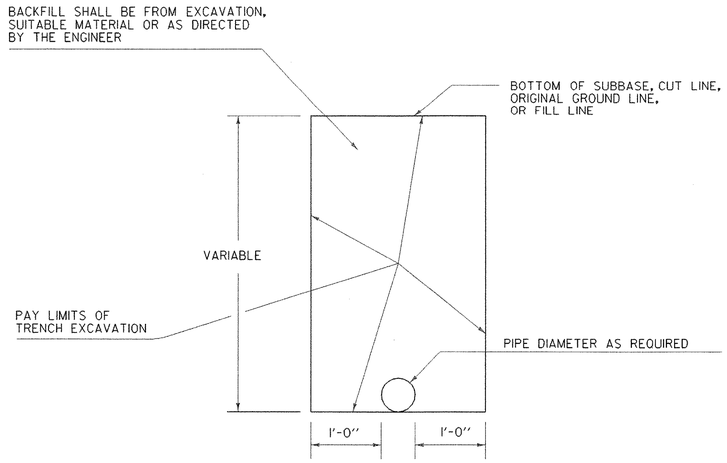

UNDERDRAIN CARRIER PIPE

TO BE USED AS SHOWN OR AS DIRECTED BY THE ENGINEER FOR FLUSHING IN AREAS OF LAWNS, SCHOOLS, AND POSSIBLE VANDALISM AREAS.

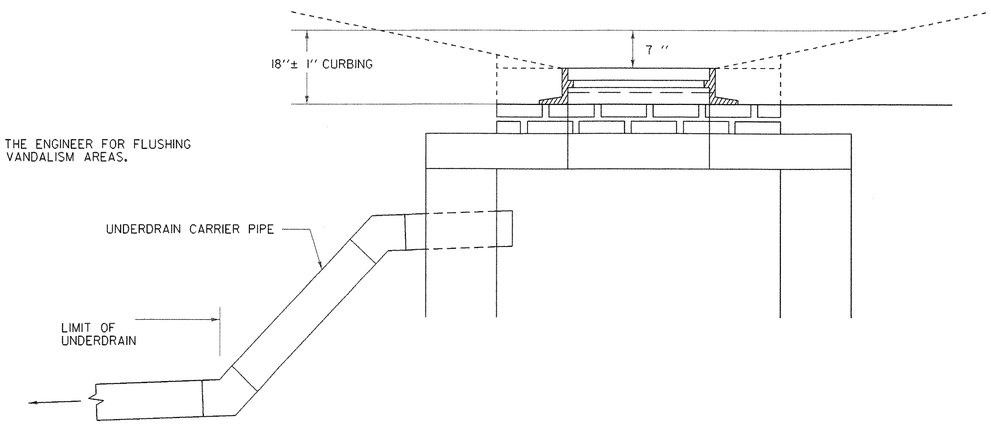

URBAN TYPE FLUSHING INSTALLATION

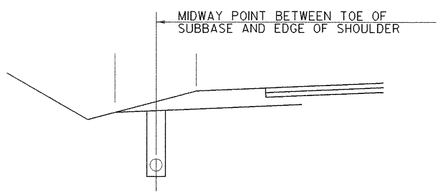

UNDERDRAIN TO BE LAID AS SHOWN ABOVE, AS SHOWN ON THE PLANS OR AS DIRECTED BY THE ENGINEER

UNDERDRAIN LOCATION

GENERAL NOTES

1. GRADE FOR UNDERDRAIN PIPE SHALL BE PARALLEL WITH THE GRADE OF THE ROAD UNLESS OTHERWISE SHOWN ON THE PLANS OR AS DIRECTED BY THE ENGINEER.
2. THE UNDERDRAIN SHALL BE TAKEN TO A PROPER OUTLET AS SHOWN ON THE PLANS OR AS DIRECTED BY THE ENGINEER.
3. ELBOWS, T'S, AND OTHER JUNCTION UNITS NECESSARY FOR PROPER INSTALLATION OF THE UNDERDRAIN, AS DIRECTED BY THE ENGINEER, SHALL BE INCLUDED IN THE UNIT BID PRICE FOR UNDERDRAIN OR CARRIER PIPE.
4. A YIELDING MARKER POST SHALL BE PLACED NEXT TO THE FLUSHING BASIN OR AS DIRECTED BY THE ENGINEER.

NOT TO SCALE

REVISIONS AND CORRECTIONS

AUG 13, 2007 - ORIGINAL APPROVAL DATE

APPROVED

Kevin L. Marshia
ROADWAY, TRAFFIC & SAFETY ENGINEER

Richard Tetreault
DIRECTOR OF PROGRAM DEVELOPMENT

Mark D. Richter
FEDERAL HIGHWAY ADMINISTRATION

UNDERDRAIN CONSTRUCTION DETAILS

VERMONT AGENCY OF TRANSPORTATION

STANDARD

D-30

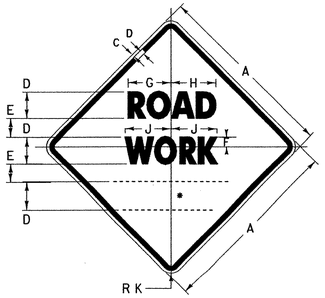

W20-1

• SEE DISTANCE DETAILS

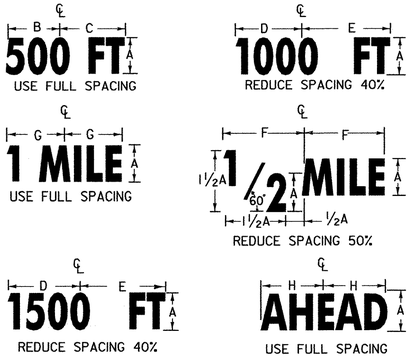

DISTANCE DETAILS

SIGN	DIMENSIONS (INCHES)									
	A	B	C	D	E	F	G	H	J	K
MIN.	36	5/8	7/8	5D	3 1/2	3 1/4	8 3/8	8 7/8	9	2 1/4
STD.	48	3/4	1 1/4	7D	4 3/4	4 1/2	11 11/16	12 7/16	12 5/8	3

DIMENSIONS (INCHES)							
A	B	C	D	E	F	G	H
5D	10 3/16	10 3/16	11 5/8	11 1/4	11 1/4	9 1/2	10 7/8
7D	14 1/4	15 1/8	14 7/8	15 3/4	15 3/4	13 1/16	15 1/2

(ALL DIMENSIONS SHOWN IN INCHES)

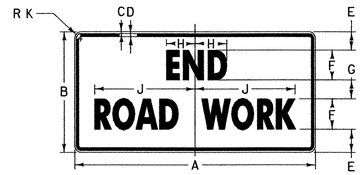

G20-2A

SIGN	DIMENSIONS (INCHES)									
	A	B	C	D	E	F	G	H	J	K
MIN.	36	18	5/8	7/8	3 3/4	4C	2 1/2	4	12 5/8	2 1/4
STD.	48	24	3/4	1 1/4	4 1/8	6C	3 3/4	5 7/8	22	3

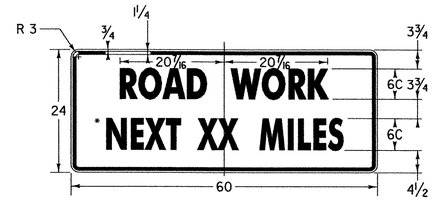

G20-1

• OPTICALLY CENTER

THIS SIGN TO BE USED WHEN PROJECT LENGTH EXCEEDS 2 MILES OR AS REQUESTED BY THE RESIDENT ENGINEER. SHOW MILEAGE TO NEAREST 1/4 MILE USING FRACTIONS, NOT DECIMALS. HAND LETTERING OF MILEAGE WILL NOT BE ALLOWED.

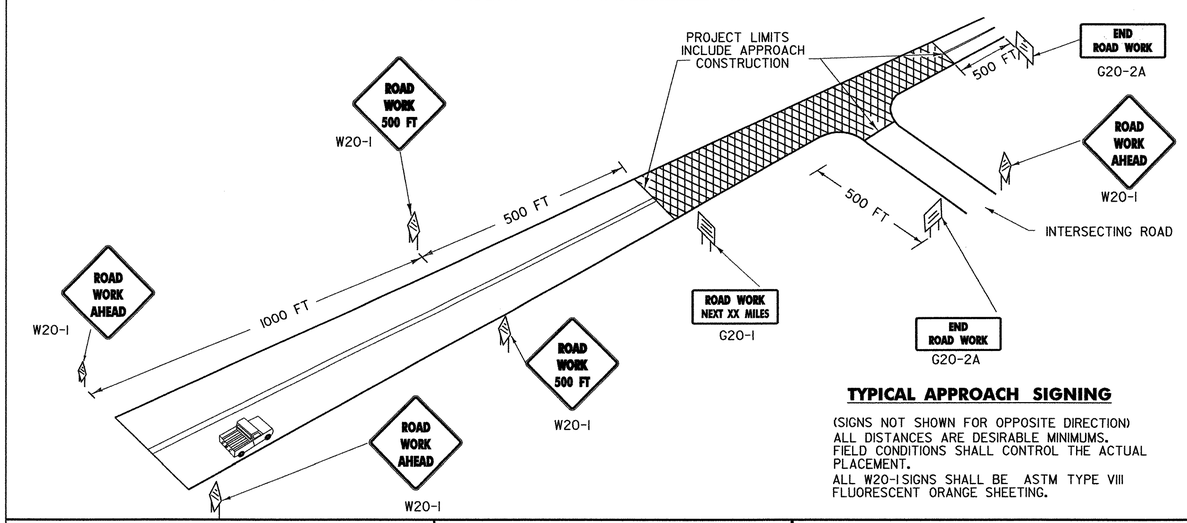

TYPICAL APPROACH SIGNING

(SIGNS NOT SHOWN FOR OPPOSITE DIRECTION)
ALL DISTANCES ARE DESIRABLE MINIMUMS. FIELD CONDITIONS SHALL CONTROL THE ACTUAL PLACEMENT.
ALL W20-1 SIGNS SHALL BE ASTM TYPE VIII FLUORESCENT ORANGE SHEETING.

NOTES

THE SIGNS SHOWN ON THIS SHEET ARE INTENDED FOR USE IN PROVIDING ADVANCE WARNING AND INFORMATION ON CONSTRUCTION PROJECTS OVER WHICH TRAFFIC WILL BE MAINTAINED. WHEN ADDITIONAL APPROACH SIGNS OR OTHER TYPES OF ADVANCE SIGNING OR CONTROL ARE NECESSARY, THE PLANS AND\OR THE SPECIFICATIONS FOR THAT PROJECT WILL GIVE THE DETAILS OF THE SIGNS AND DEVICES REQUIRED. FOR ON-PROJECT CONSTRUCTION SIGNS, REFER TO APPROPRIATE STANDARD SHEETS.

APPLICATION OF STANDARDS

SINCE IT IS NOT POSSIBLE TO PRESCRIBE DETAILED STANDARDS OF APPLICATION FOR ALL OF THE SITUATIONS THAT MAY CONCEIVABLY ARISE ON A CONSTRUCTION PROJECT, REFERENCE SHALL BE MADE TO THE "MANUAL ON UNIFORM TRAFFIC CONTROL DEVICES" FOR THE PRINCIPLES, PROCEDURES, AND STANDARDS THAT WILL BE REQUIRED IN CONNECTION WITH ADVANCED WARNING AND ON-PROJECT CONSTRUCTION SIGNS AND BARRICADES. THE SIGNS SHOWN IN E-101 AND E-102 REPRESENT A SAMPLE OF THOSE MORE COMMONLY USED.

LOCATION

THE SIGNS SHALL BE LOCATED AS DETAILED ON THIS SHEET OR AS OTHERWISE SHOWN ON THE PLANS. THEY SHALL APPEAR AT EACH END OF THE HIGHWAY UNDER CONSTRUCTION AND ON ALL INTERSECTING PUBLIC HIGHWAYS. THE ENGINEER SHALL DETERMINE THE EXACT LOCATIONS.

DESIGN

LETTERS, DIGITS, ARROWS, SPACING AND TEXT DIMENSIONS SHALL CONFORM WITH THE "STANDARD HIGHWAY SIGNS BOOK" AND DESIGNS PRESCRIBED IN THE MANUAL ON UNIFORM TRAFFIC CONTROL DEVICES (MUTCD) ADOPTED BY THE U.S. DEPARTMENT OF TRANSPORTATION, FEDERAL HIGHWAY ADMINISTRATION (FHWA).

MATERIALS

THE SIGN BASE MATERIAL USED FOR THE SIGNS ON THIS SHEET MAY BE ANY OF THE FOLLOWING, WITH MINIMUM THICKNESS AS NOTED.

FLAT SHEET ALUMINUM	0.125 INCHES
HIGH DENSITY OVERLAYED PLYWOOD	5/8 INCHES

REFLECTORIZATION

ALL LEAD SIGNS (W20-1) ON THIS SHEET SHALL BE ASTM TYPE VIII FLUORESCENT ORANGE SHEETING. ALL OTHER SIGNS ON THIS SHEET SHALL BE ASTM TYPE III RETROREFLECTORIZED SHEETING.

COLORS

THE COLORS SHALL CONFORM WITH THE STANDARD COLORS ADOPTED BY AASHTO AND APPROVED BY THE FHWA. COLORS SHOWN ON THIS SHEET CONSIST OF BLACK TEXT AND BORDER ON A RETROREFLECTORIZED ASTM TYPE III OR TYPE VIII ORANGE BACKGROUND.

INSTALLATION

THE SIGNS SHALL BE ERECTED BEFORE THE START OF ANY WORK AND SHALL BE COVERED UNTIL WORK COMMENCES, DURING PERIODS OF INACTIVITY, OR UPON COMPLETION OF THE WORK. EACH SIGN SHALL BE ERECTED IN A NEAT AND WORKMANLIKE MANNER ON POSTS SET SECURELY IN THE GROUND. THE BOTTOM OF A SIGN SHALL BE AT LEAST 7 FEET ABOVE THE EDGE OF PAVEMENT, AND THE NEAREST EDGE OF A SIGN SHALL BE AT LEAST 6 FEET OUTSIDE THE SHOULDER POINT, 4 FEET OUTSIDE GUARD RAIL, OR 2 FEET OUTSIDE CURBING, OR SIDEWALK. THE INSTALLATION OF SIGNS SHALL BE SUBJECT TO APPROVAL OF THE ENGINEER, IN URBAN AREAS, THE BOTTOM OF THE SIGN SHALL BE AT LEAST 7 FEET ABOVE THE SIDEWALK. SIGNS MAY BE REMOVED UPON COMPLETION OF THE WORK AT THE DISCRETION OF THE ENGINEER.

NOTES CONT.

MAINTENANCE

SIGNS SHALL BE MAINTAINED IN A CLEAN AND LEGIBLE CONDITION SATISFACTORY TO THE ENGINEER. THEY SHALL BE COMPLETELY VISIBLE TO APPROACHING TRAFFIC AT ALL TIMES. THEY SHALL BE KEPT PLUMB AND LEVEL, AND ALWAYS PRESENT A NEAT APPEARANCE. DAMAGED, DEFACED, OR DIRTY SIGNS SHALL BE REPAIRED, CLEANED OR REPLACED AS ORDERED BY THE ENGINEER.

GENERAL

THE COST OF FURNISHING, INSTALLING, MAINTAINING AND REMOVING ALL CONSTRUCTION APPROACH SIGNS WILL BE CONSIDERED INCIDENTAL WORK PERTAINING TO THE PROJECT AS A WHOLE AND SHALL BE INCLUDED IN THE CONTRACT UNIT PRICE BID FOR VARIOUS ITEMS INVOLVED IN THE CONTRACT. DURING ALL PHASES OF CONSTRUCTION THE REQUIREMENTS SET FORTH IN THE "MANUAL ON UNIFORM TRAFFIC CONTROL DEVICES" SHALL BE MET.

SIGN COVERS

SIGN COVERS SHALL CONSIST OF A PANEL PAINTED FLAT BLACK, THE SAME SIZE AS THE SIGN IT COVERS. THE PANEL SHALL BE OF WOOD, PLYWOOD, HARDBOARD OR ANY MATERIAL SATISFACTORY TO THE ENGINEER. NO MATERIAL WILL BE APPROVED THAT WILL DETERIORATE BY EXPOSURE TO THE WEATHER DURING THE PROJECT. MOUNTING OF THE PANEL SHALL BE DONE IN SUCH A WAY AS NOT TO DAMAGE THE SIGN FACE MATERIAL.

CONTRACTORS SHALL COORDINATE THEIR SIGNING ACTIVITIES WITH OTHER CONTRACTORS WITHIN THE PROJECT LIMITS, AS DIRECTED BY THE REGIONAL CONSTRUCTION ENGINEER.

SIGN POSTS

WHERE CONSTRUCTION SIGN INSTALLATIONS ARE NOT PROTECTED BY GUARD RAIL OR OTHER APPROVED TRAFFIC BARRIERS, THE POSTS ON WHICH THE SIGNS ARE MOUNTED SHALL BE YIELDING METAL POSTS AS DESIGNATED IN THE E SERIES OF STANDARD DRAWINGS OR YIELDING WOODEN POSTS IN ACCORDANCE WITH THE FOLLOWING REQUIREMENTS:

WOODEN POSTS ARE ACCEPTABLE FOR USE WITH CONSTRUCTION SIGNS. THESE POSTS SHALL HAVE A UNIFORM CROSS-SECTION AND SHALL BE MADE FROM GRADE 2, AIR-DRIED SOUTHERN YELLOW PINE OR ANOTHER EQUIVALENT SOFTWOOD. AN ACCEPTABLE EQUIVALENT SOFTWOOD SHALL HAVE AN EXTREME FIBER IN BENDING "Fb" DESIGN VALUE NOT TO EXCEED 1400 psi AND HORIZONTAL SHEAR "Fv" DESIGN VALUE NOT TO EXCEED 90 psi SPECIFICATION; "DESIGN VALUES FOR WOOD CONSTRUCTION" AND RELATED SUPPLEMENT, LATEST EDITION.

AS ESTABLISHED BY THE NATIONAL FOREST PRODUCTS ASSOCIATION IN THEIR NATIONAL DESIGN. THE FOLLOWING ARE CONSIDERED TO BE ACCEPTABLE WOODEN POSTS:

1. 4" X 4" (ACTUAL DIMENSIONS ARE S4S 3.5" X 3.5")
   A) ACCEPTABLE FOR SINGLE OR DUAL POSTS INSTALLATION WITH NO MODIFICATIONS.

ALL WOODEN POSTS SHALL HAVE AN EMBEDMENT DEPTH OF 4 FEET.
NO CROSS-BRACING OR BACK-BRACING TO KEEP THE POSTS PLUMB WILL BE ALLOWED.
CONCRETE FOUNDATIONS, COLLARS, OR SOIL BEARING PLATES ARE NOT PERMITTED.
CONSTRUCTION SIGNS SHALL BE PLACED ON TWO OR MORE POSTS WHEN ANY OF THE FOLLOWING CONDITIONS GOVERN:

A) THE SIGN WIDTH (HORIZONTAL DIMENSIONS FOR DIAMOND SHAPED SIGNS) EXCEEDS 3 1/2 FEET.
B) THE EXPOSED SIGN AREA OF ANY SINGLE SIGN OR ASSEMBLY EXCEEDS 7 SQ. FEET.
C) THE Sv OF A SINGLE POST IS 64.

OTHER STDS. REQUIRED: E-100A, E-101, E-102

REVISIONS AND CORRECTIONS

MAY 26, 1989 - DATE OF ORIGINAL ISSUE
OCT 21, 1992 - REVISED WOOD POST REQUIREMENTS, ADDED SIGN DETAILS, & REVISED TITLE BLOCK
AUG. 08, 1995 - MINOR NOTE REVISIONS
JAN. 06, 1997 - MINOR NOTE AND DIMENSION REVISIONS
JAN. 2, 2004 - CHANGED REFLECTIVE SHEETING TO ASTM TYPE III OR TYPE VIII

APPROVED

DIRECTOR OF PROGRAM DEVELOPMENT

TRAFFIC OPERATIONS ENGINEER

FEDERAL HIGHWAY ADMINISTRATION

CONSTRUCTION APPROACH SIGNS

VERMONT AGENCY OF TRANSPORTATION

STANDARD
E-100

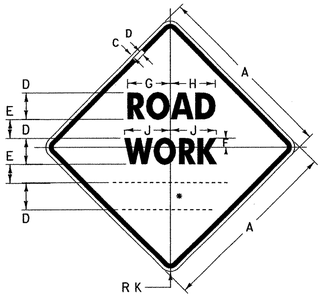

W20-1

• SEE DISTANCE DETAILS

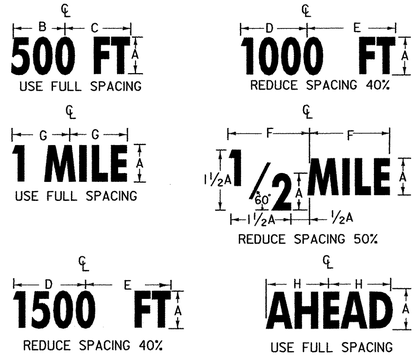

DISTANCE DETAILS

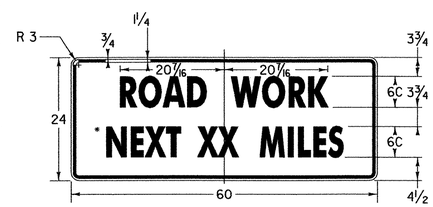

G20-1

• OPTICALLY CENTER

THIS SIGN TO BE USED WHEN PROJECT LENGTH EXCEEDS 2 MILES OR AS REQUESTED BY THE RESIDENT ENGINEER. SHOW MILEAGE TO NEAREST 1/4 MILE USING FRACTIONS, NOT DECIMALS. HAND LETTERING OF MILEAGE WILL NOT BE ALLOWED.

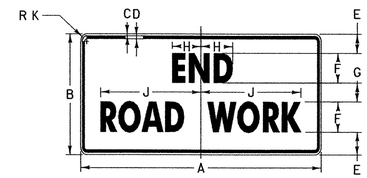

G20-2A

SIGN	DIMENSIONS (INCHES)									
	A	B	C	D	E	F	G	H	J	K
MIN.	36	18	5/8	7/8	3 3/4	4C	2 1/2	4	12 5/8	2 1/4
STD.	48	24	3/4	1 1/4	4 1/8	6C	3 3/4	5 7/8	22	3

SIGN	DIMENSIONS (INCHES)							
	A	B	C	D	E	F	G	K
MIN.	36	5/8	7/8	5D	3 1/2	3 1/4	8 3/8	8 7/8	9	2 1/4
STD.	48	3/4	1 1/4	7D	4 3/4	4 1/2	11 11/16	12 7/16	12 5/8	3

DIMENSIONS (INCHES)							
A	B	C	D	E	F	G	H
5D	10 3/16	10 3/16	11 5/8	11 1/4	11 1/4	9 1/2	10 7/8
7D	14 1/4	15 1/8	14 7/8	15 3/4	15 3/4	13 1/16	15 1/2

(ALL DIMENSIONS SHOWN IN INCHES)

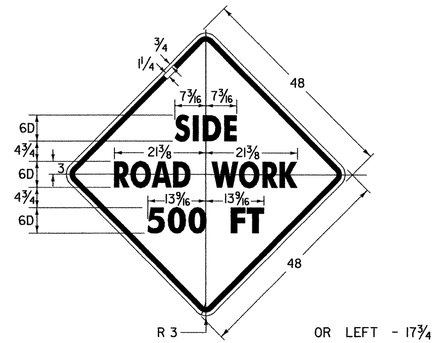

VC-839

OR LEFT - 17 3/4
RIGHT - 22
500 - 14 3/4
FT - 8 1/16

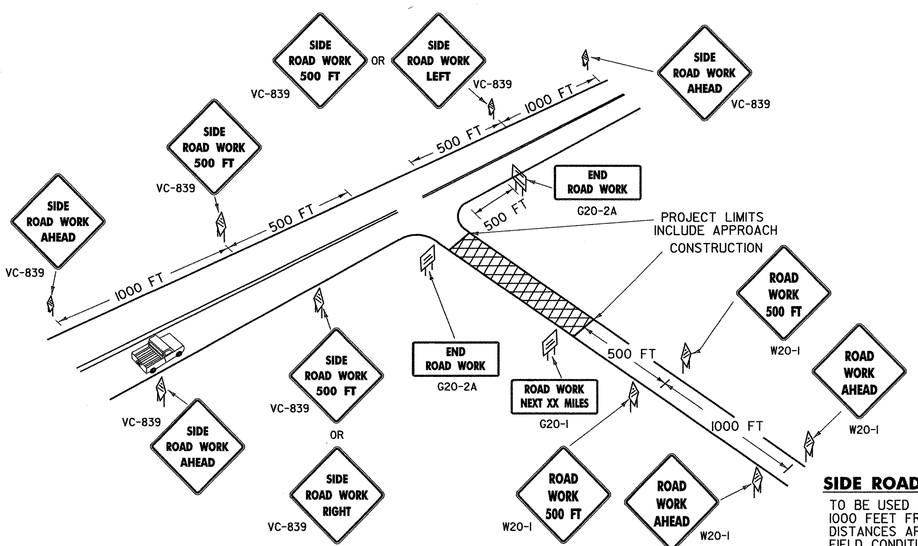

SIDE ROAD APPROACH SIGNING

TO BE USED WHEN CONSTRUCTION IS UP TO 1000 FEET FROM THE INTERSECTION. ALL DISTANCES ARE DESIREABLE MINIMUMS. FIELD CONDITIONS SHALL CONTROL THE ACTUAL PLACEMENT.

ALL W20-1 AND VC-839 SIGNS SHALL BE ASTM TYPE VIII FLUORESCENT ORANGE SHEETING.

NOTES

THE SIGNS SHOWN ON THIS SHEET ARE INTENDED FOR USE IN PROVIDING ADVANCE WARNING AND INFORMATION ON CONSTRUCTION PROJECTS OVER WHICH TRAFFIC WILL BE MAINTAINED. WHEN ADDITIONAL APPROACH SIGNS OR OTHER TYPES OF ADVANCE SIGNING OR CONTROL ARE NECESSARY, THE PLANS AND\OR THE SPECIFICATIONS FOR THAT PROJECT WILL GIVE THE DETAILS OF THE SIGNS AND DEVICES REQUIRED. FOR ON-PROJECT CONSTRUCTION SIGNS, REFER TO APPROPRIATE STANDARD SHEETS.

APPLICATION OF STANDARDS

SINCE IT IS NOT POSSIBLE TO PRESCRIBE DETAILED STANDARDS OF APPLICATION FOR ALL OF THE SITUATIONS THAT MAY CONCEIVABLY ARISE ON A CONSTRUCTION PROJECT, REFERENCE SHALL BE MADE TO THE "MANUAL ON UNIFORM TRAFFIC CONTROL DEVICES" FOR THE PRINCIPLES, PROCEDURES, AND STANDARDS THAT WILL BE REQUIRED IN CONNECTION WITH ADVANCED WARNING AND ON-PROJECT CONSTRUCTION SIGNS AND BARRICADES. THE SIGNS SHOWN IN E-101 AND E-102 REPRESENT A SAMPLE OF THOSE MORE COMMONLY USED.

LOCATION

THE SIGNS SHALL BE LOCATED AS DETAILED ON THIS SHEET OR AS OTHERWISE SHOWN ON THE PLANS. THEY SHALL APPEAR AT EACH END OF THE HIGHWAY UNDER CONSTRUCTION AND ON ALL INTERSECTING PUBLIC HIGHWAYS. THE ENGINEER SHALL DETERMINE THE EXACT LOCATIONS.

DESIGN

LETTERS, DIGITS, ARROWS SPACING AND TEXT DIMENSIONS SHALL CONFORM WITH THE "STANDARD HIGHWAY SIGNS BOOK" AND DESIGNS PRESCRIBED IN THE MANUAL ON UNIFORM TRAFIC CONTROL DEVICES (MUTCD) ADOPTED BY THE U.S. DEPARTMENT OF TRANSPORTATION, FEDERAL HIGHWAY ADMINISTRATION (FHWA).

NOTES CONT.

MATERIALS

THE SIGN BASE MATERIAL USED FOR THE SIGNS ON THIS SHEET MAY BE ANY OF THE FOLLOWING, WITH MINIMUM THICKNESS AS NOTED.

FLAT SHEET ALUMINUM	0.125 INCHES
HIGH DENSITY OVERLAYED PLYWOOD	5/8 INCHES

REFLECTORIZATION

ALL LEAD SIGNS (W20-1, VC-839) ON THIS SHEET SHALL BE ASTM TYPE VIII FLUORESCENT ORANGE SHEETING. ALL OTHER SIGNS ON THIS SHEET SHALL BE ASTM TYPE III RETROREFLECTORIZED SHEETING.

COLORS

THE COLORS SHALL CONFORM WITH THE STANDARD COLORS ADOPTED BY AASHTO AND APPROVED BY THE FHWA. COLORS SHOWN ON THIS SHEET CONSIST OF BLACK TEXT AND BORDER ON A RETROREFLECTORIZED ASTM TYPE III OR TYPE VIII ORANGE BACKGROUND.

INSTALLATION

THE SIGNS SHALL BE ERECTED BEFORE THE START OF ANY WORK AND SHALL BE COVERED UNTIL WORK COMMENCES, DURING PERIODS OF INACTIVITY, OR UPON COMPLETION OF THE WORK. EACH SIGN SHALL BE ERECTED IN A NEAT AND WORKMANLIKE MANNER ON POSTS SET SECURELY IN THE GROUND. THE BOTTOM OF A SIGN SHALL BE AT LEAST 7 FEET ABOVE THE EDGE OF PAVEMENT, AND THE NEAREST EDGE OF A SIGN SHALL BE AT LEAST 6 FEET OUTSIDE THE SHOULDER POINT, 4 FEET OUTSIDE GUARD RAIL, OR 2 FEET OUTSIDE CURBING, OR SIDEWALK. THE INSTALLATION OF SIGNS SHALL BE SUBJECT TO APPROVAL OF THE ENGINEER, IN URBAN AREAS, THE BOTTOM OF THE SIGN SHALL BE AT LEAST 7 FEET ABOVE THE SIDEWALK. SIGNS MAY BE REMOVED UPON COMPLETION OF THE WORK AT THE DISCRETION OF THE ENGINEER.

MAINTENANCE

SIGNS SHALL BE MAINTAINED IN A CLEAN AND LEGIBLE CONDITION SATISFACTORY TO THE ENGINEER. THEY SHALL BE COMPLETELY VISIBLE TO APPROACHING TRAFFIC AT ALL TIMES. THEY SHALL BE KEPT PLUMB AND LEVEL, AND ALWAYS PRESENT A NEAT APPEARANCE. DAMAGED, DEFACED, OR DIRTY SIGNS SHALL BE REPAIRED, CLEANED OR REPLACED AS ORDERED BY THE ENGINEER.

GENERAL

THE COST OF FURNISHING, INSTALLING, MAINTAINING AND REMOVING ALL CONSTRUCTION APPROACH SIGNS WILL BE CONSIDERED INCIDENTAL WORK PERTAINING TO THE PROJECT AS A WHOLE AND SHALL BE INCLUDED IN THE CONTRACT UNIT PRICE BID FOR VARIOUS ITEMS INVOLVED IN THE CONTRACT. DURING ALL PHASES OF CONSTRUCTION THE REQUIREMENTS SET FORTH IN THE "MANUAL ON UNIFORM TRAFFIC CONTROL DEVICES" SHALL BE MET.

SIGN COVERS

SIGN COVERS SHALL CONSIST OF A PANEL PAINTED FLAT BLACK, THE SAME SIZE AS THE SIGN IT COVERS. THE PANEL SHALL BE OF WOOD, PLYWOOD, HARDBOARD OR ANY MATERIAL SATISFACTORY TO THE ENGINEER. NO MATERIAL WILL BE APPROVED THAT WILL DETERIORATE BY EXPOSURE TO THE WEATHER DURING THE PROJECT. MOUNTING OF THE PANEL SHALL BE DONE IN SUCH A WAY AS NOT TO DAMAGE THE SIGN FACE MATERIAL.

CONTRACTORS SHALL COORDINATE THEIR SIGNING ACTIVITIES WITH OTHER CONTRACTORS WITHIN THE PROJECT LIMITS, AS DIRECTED BY THE REGIONAL CONSTRUCTION ENGINEER.

SIGN POSTS

WHERE CONSTRUCTION SIGN INSTALLATIONS ARE NOT PROTECTED BY GUARD RAIL OR OTHER APPROVED TRAFFIC BARRIERS, THE POSTS ON WHICH THE SIGNS ARE MOUNTED SHALL BE YIELDING METAL POSTS AS DESIGNATED IN THE E SERIES OF STANDARD DRAWINGS OR YIELDING WOODEN POSTS IN ACCORDANCE WITH THE FOLLOWING REQUIREMENTS:

WOODEN POSTS ARE ACCEPTABLE FOR USE WITH CONSTRUCTION SIGNS. THESE POSTS SHALL HAVE A UNIFORM CROSS-SECTION AND SHALL BE MADE FROM GRADE 2, AIR-DRIED SOUTHERN YELLOW PINE OR ANOTHER EQUIVELENT SOFTWOOD. AN ACCEPTABLE EQUIVELENT SOFTWOOD SHALL HAVE AN EXTREME FIBER IN BENDING "Fb" DESIGN VALUE NOT TO EXCEED 1400 psi AND HORIZONTAL SHEAR "Fv" DESIGN VALUE NOT TO EXCEED 90 psi SPECIFICATION; "DESIGN VALUES FOR WOOD CONSTRUCTION" AND RELATED SUPPLEMENT, LATEST EDITION.

AS ESTABLISHED BY THE NATIONAL FOREST PRODUCTS ASSOCIATION IN THEIR NATIONAL DESIGN THE FOLLOWING ARE CONSIDERED TO BE ACCEPTABLE WOODEN POSTS:

I. 4" X 4" (ACTUAL DIMENSIONS ARE S4S 3.5" X 3.5")

A) ACCEPTABLE FOR SINGLE OR DUAL POSTS INSTALLATION WITH NO MODIFICATIONS.

ALL WOODEN POSTS SHALL HAVE AN EMBEDMENT DEPTH OF 4 FEET.
NO CROSS-BRACING OR BACK-BRACING TO KEEP THE POSTS PLUMB WILL BE ALLOWED.
CONCRETE FOUNDATIONS COLLARS OR SOIL BEARING PLATES ARE NOT PERMITTED.
CONSTRUCTION SIGNS SHALL BE PLACED ON TWO OR MORE POSTS WHEN ANY OF THE FOLLOWING CONDITIONS GOVERN:

A) THE SIGN WIDTH (HORIZONTAL DIMENSIONS FOR DIAMOND SHAPED SIGNS) EXCEEDS 3 1/2 FEET.
B) THE EXPOSED SIGN AREA OF ANY SINGLE SIGN OR ASSEMBLY EXCEEDS 7 SQ. FEET.
C) THE Sv OF A SINGLE POST IS 64

OTHER STDS. REQUIRED: E-100, E-101, E-102

REVISIONS AND CORRECTIONS

JAN. 06, 1997 - DATE OF ORIGINAL ISSUE
JAN. 2, 2004 - CHANGED REFLECTIVE SHEETING TO ASTM TYPE III OR TYPE VIII

APPROVED

DIRECTOR OF PROGRAM DEVELOPMENT

TRAFFIC OPERATIONS ENGINEER

FEDERAL HIGHWAY ADMINISTRATION

SIDE ROAD CONSTRUCTION APPROACH SIGNS

VERMONT AGENCY OF TRANSPORTATION

STANDARD

E-100A

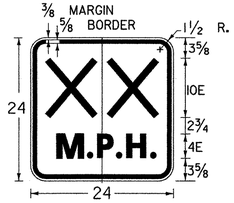

"XX" DENOTES ADVISORY SPEED AS SHOWN ON THE PLANS

W13-1

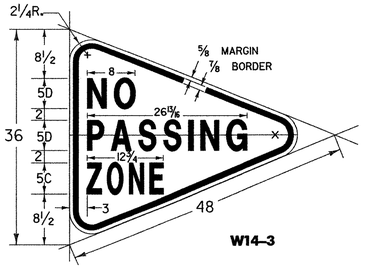

W14-3

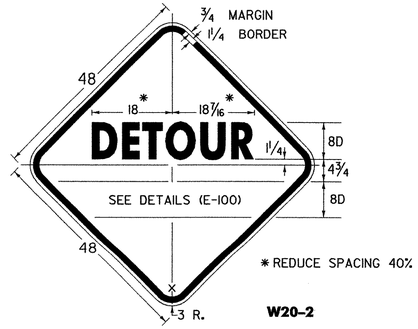

* REDUCE SPACING 40%

W20-2

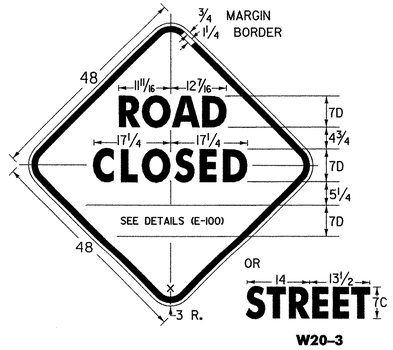

W20-3

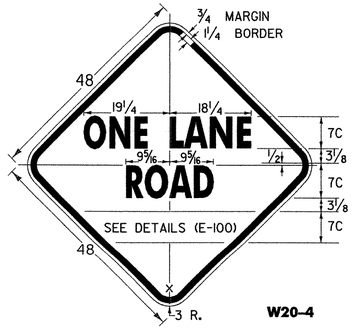

W20-4

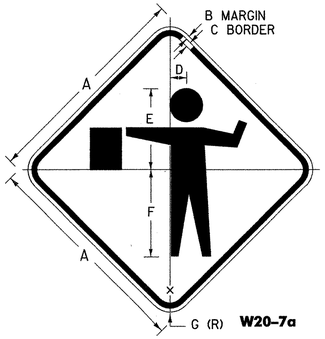

W20-7a

SIGN	DIMENSIONS(INCHES)						
	A	B	C	D	E	F	G
STD.	36	5/8	7/8	2 3/4	13 1/2	14 5/8	2 1/4
FWY.	48	3/4	1 1/4	3 3/4	18	19 1/2	3

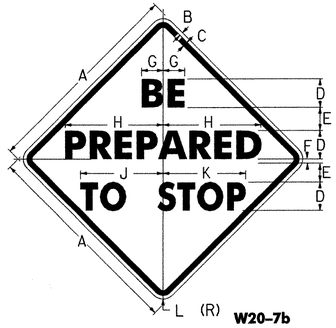

W20-7b

COLORS:
BLACK BORDER AND TEXT (NON RETRORFL.)
ORANGE BACKROUND (RETRORFL.)

W3-4

COLORS:
BLACK BORDER AND TEXT (NON RETRORFL.)
YELLOW BACKROUND (RETRORFL.)

SIGN	DIMENSIONS (INCHES)										
	A	B	C	D	E	F	G	H	J	K	L
MIN.	36	5/8	7/8	6C	3 5/8	7/8	3 3/4	16 3/8	13	13 7/8	2 1/4
STD.	48	3/4	1 1/4	8C	4 7/8	1 1/4	5	21 7/8	17 3/8	18 1/2	3
EXPWY.	60	3/4	1 1/4	9C	5 3/8	1 7/8	5 5/8	24 3/4	19 3/8	20 1/4	3

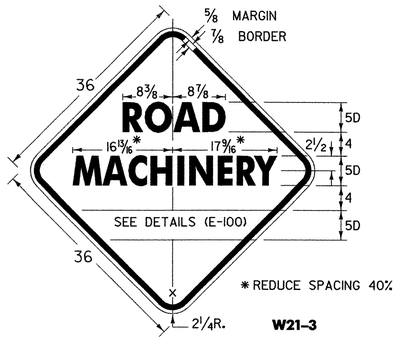

* REDUCE SPACING 40%

W21-3

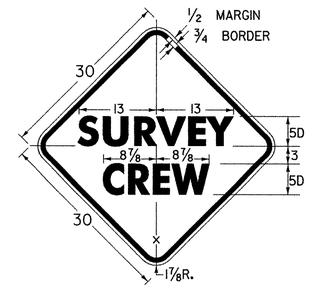

W21-6

SIGN PADDLE FOR FLAGPERSON

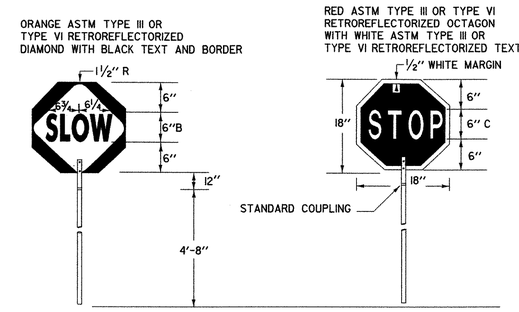

SIGN DETAIL

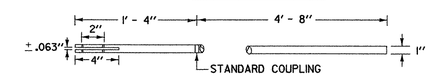

STAFF DETAIL

MATERIALS
THE SIGN MATERIALS SHALL BE 0.063" ALUMINUM WITH COLORS AS INDICATED ON DETAILS.
THE STAFF SHALL BE 3/4" TO 1 1/4" DIAMETER RIGID ALUMINUM CONDUIT/TUBING WITH A WALL THICKNESS OF 0.125", OR 1" TO 1 1/2" DIAMETER RIGID PVC CONDUIT/TUBING WITH 0.125" WALL THICKNESS

MOUNTING
THE STAFF SHALL BE MOUNTED WITH EITHER TWO 1/4" DIAMETER ALUMINUM BOLTS OR TWO 1/4" DIAMETER ALUMINUM RIVETS.

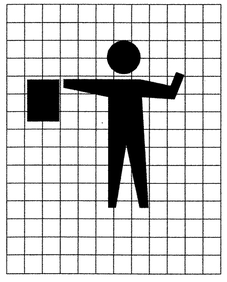

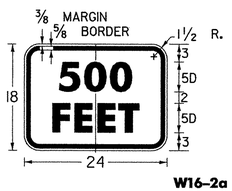

W16-2a

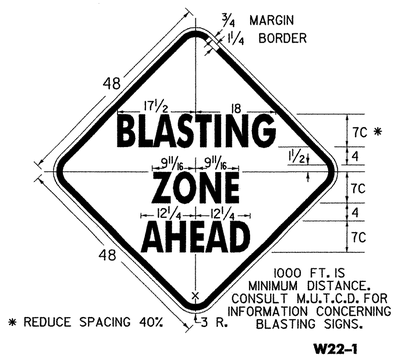

* REDUCE SPACING 40%

1000 FT. IS MINIMUM DISTANCE. CONSULT M.U.T.C.D. FOR INFORMATION CONCERNING BLASTING SIGNS.

W22-1

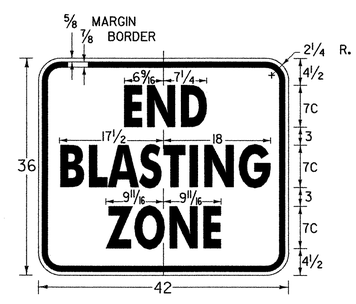

W22-3

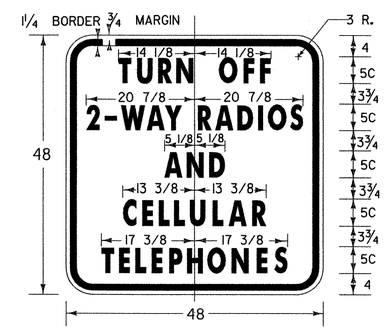

VW22-1

NOTES

SEE STANDARD SHEET E-100 FOR NOTES AND TEXT DETAILS
COLORS FOR SIGNS SHOWN ON THIS SHEET SHALL BE BLACK TEXT, BORDER AND SYMBOLS ON ASTM TYPE III OR TYPE VI RETROREFLECTORIZED ORANGE BACKGROUND, UNLESS OTHERWISE NOTED
SIGN DETAILS INDICATE THE APPROPRIATE COLOR.

OTHER STDS. REQUIRED: E-100

NOTE: ALL DIMENSIONS SHOWN IN INCHES EXCEPT WHERE NOTED

REVISIONS AND CORRECTIONS

OCT. 30, 1987 - DATE OF ORIGINAL ISSUE
JAN. 23, 1989 - DELETE MOTORCYCLE SYMBOL SIGN AND SPEED SIGN, ADDED TWO SIGNS
OCT. 21, 1992 - ADDED A SIGN, REVISED A SIGN DIMENSION & TYPE ERROR & REVISED TITLE BLOCK
AUG. 08, 1995 - ADDED FLAGGER GRID
JUNE 30, 2003 - CHANGED REFLECTIVE SHEETING TO ASTM TYPE III OR TYPE VI CHANGED TEXT ON W20-7b SIGN

APPROVED

DIRECTOR OF PROGRAM DEVELOPMENT

TRAFFIC OPERATIONS ENGINEER

FEDERAL HIGHWAY ADMINISTRATION

CONSTRUCTION SIGN DETAILS

VERMONT AGENCY OF TRANSPORTATION

STANDARD

E-102

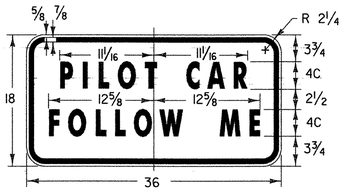

G20-4

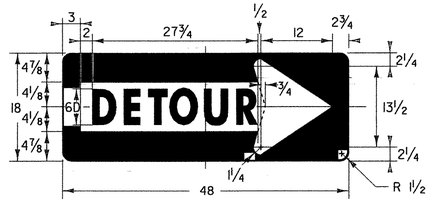

M4-10(R)

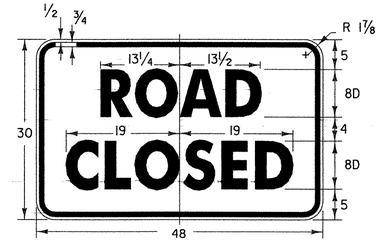

R11-2

COLORS:
BLACK TEXT AND BORDER
WHITE RETROREFLECTORIZED BACKGROUND

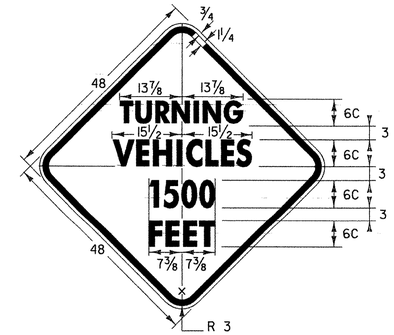

VC-001

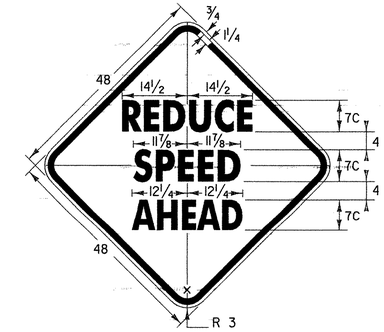

VC-002

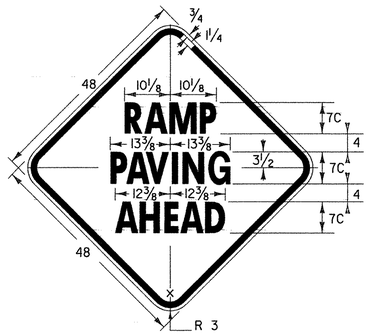

VC-003

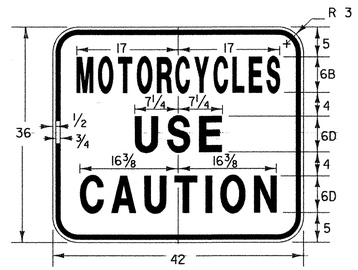

VC-004

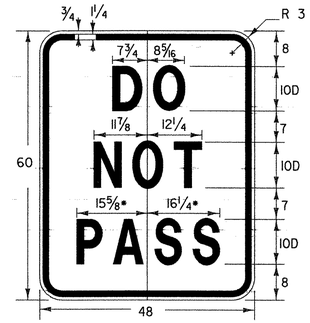

VC-005

• REDUCE SPACING BY 40%

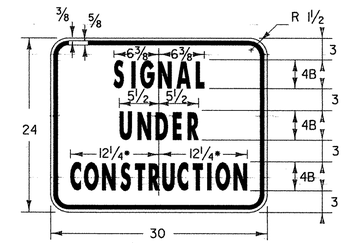

VC-820

• REDUCE SPACING 25%

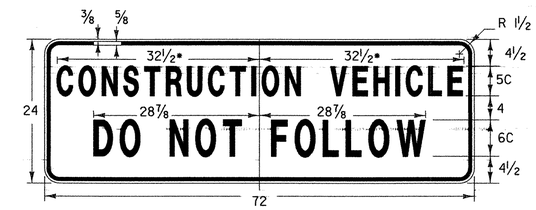

VC-007

• REDUCE SPACING 20%

IT IS SUGGESTED THAT THIS SIGN BE DESIGNED TO FOLD, (DOWN OR ACROSS), BE COVERED, OR BE REMOVED WHEN NOT IN USE. THE SIGN SHOULD ALSO BE MOUNTED AS TO NOT INTERFERE WITH THE VISIBILITY OF DIRECTIONAL OR TAIL LIGHTS AS REQUIRED BY LAW.

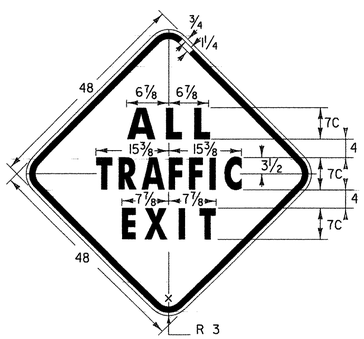

VC-008

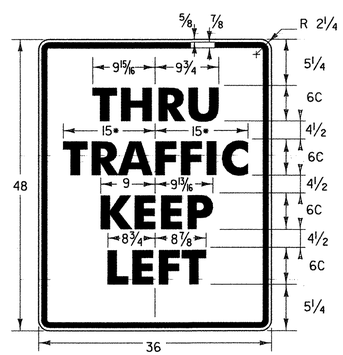

VR-118L

• REDUCE SPACING 25 %

COLORS:
BLACK TEXT AND BORDER
WHITE (RETROREFLECTORIZED) BACKGROUND

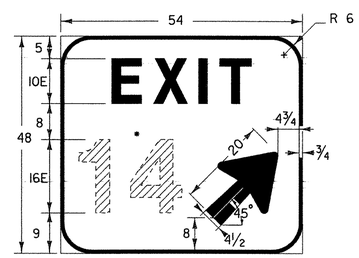

E5-1a

• EXIT NUMBER AS PER PLANS OPTICALLY SPACED

COLORS:
WHITE RETROREFLECTORIZED BORDER, ARROW AND LEGEND
GREEN RETROREFLECTORIZED BACKGROUND

(ALL DIMENSIONS SHOWN IN INCHES EXCEPT WHERE NOTED)

NOTES

SEE STANDARD SHEET E-100 FOR NOTES AND TEXT DETAILS

COLORS FOR SIGNS SHOWN ON THIS SHEET SHALL BE BLACK TEXT, BORDER AND SYMBOLS ON ASTM TYPE III OR TYPE VIII RETROREFLECTIVE ORANGE BACKGROUND, UNLESS OTHERWISE NOTED.

SIGN DETAILS INDICATE THE PROPER COLOR.

OTHER STDS. REQUIRED: E-100, E-151

REVISIONS AND CORRECTIONS

AUG 08, 1995 - DATE OF ORIGINAL ISSUE
MAY 01, 2004 - CHANGED REFLECTIVE SHEETING TO TYPE III

APPROVED

DIRECTOR OF PROGRAM DEVELOPMENT

TRAFFIC OPERATIONS ENGINEER

FEDERAL HIGHWAY ADMINISTRATION

CONSTRUCTION SIGN DETAILS

VERMONT AGENCY OF TRANSPORTATION

STANDARD
E-102A

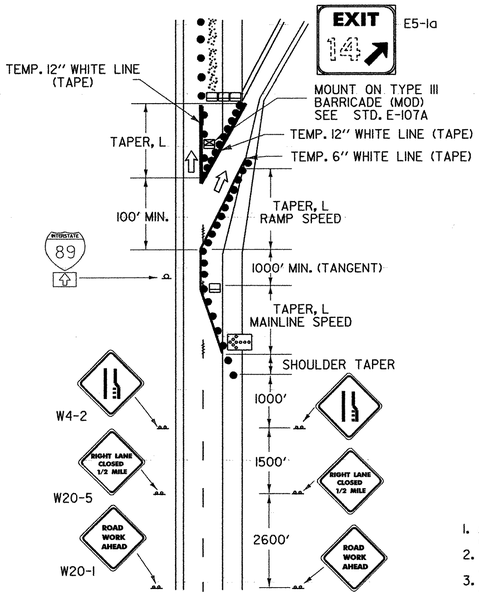

MAINLINE LANE CLOSURE AT AN EXIT RAMP

NOT TO SCALE

THIS DETAIL SHALL BE USED WHEN THE WORK ZONE BEGINS AT THE GORE OR THE MAINLINE LANE CLOSURE DRUM PLACEMENT INTERFERES WITH THE EXIT RAMP.

LEGEND

- REFL. PLASTIC DRUMS
- PAVEMENT MARKING REMOVAL
- INDICATES TRAFFIC FLOW
- WORK AREA
- FLASHING ARROW PANEL
- TYPE III BARRICADES
- TYPE III BARRICADES (MOD.)

NOTES

1. ALL SIGNS SHALL BE MOUNTED ON FIXED POSTS (YIELDING TYPE) UNLESS OTHERWISE NOTED.
2. CHANNELIZING DEVICES SHALL BE PLACED IN ACCORDANCE WITH THE TABLE ON THIS SHEET
3. ALL DISTANCES ARE DESIRABLE MINIMUMS, FIELD CONDITIONS SHALL CONTROL THE ACTUAL PLACEMENT.
4. TAPER RATES ARE BASED ON THE POSTED MAINLINE AND EXIT SPEEDS.
5. TEMPORARY PAVEMENT MARKINGS ARE REQUIRED WHEN THE LAYOUT IS TO BE IN EFFECT FOR THREE DAYS OR MORE.
6. LANE CLOSURES AND TAPER LENGTHS, L, AS DETAILED ON THIS SHEET.
7. EXIT SIGN SHALL BE MOUNTED A MINIMUM OF 7 FEET ABOVE THE GROUND AND HIGH ENOUGH TO BE SEEN ABOVE CHANNELIZING DEVICES.

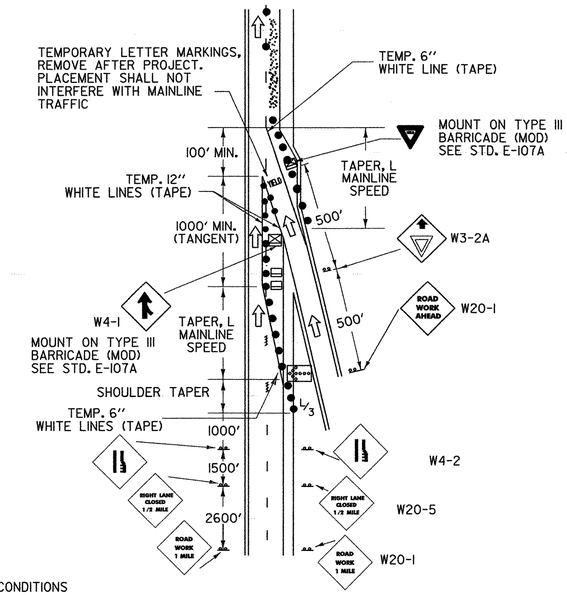

MAINLINE LANE CLOSURE AT AN ENTRANCE RAMP

NOT TO SCALE

THIS DETAIL SHALL BE USED WHEN THE WORK ZONE BEGINS AT THE END OF THE ACCELERATION LANE OR THE MAINLINE LANE CLOSURE DRUM PLACEMENT INTERFERES WITH THE ON-RAMP TRAFFIC. IF THE LENGTH OF THE ACCELERATION LANE IS NOT ADEQUATE, THE YIELD SIGN SHALL BE REPLACED WITH A STOP SIGN. IF A STOP SIGN IS USED, IT SHOULD BE ACCOMPANIED BY A STOP BAR.

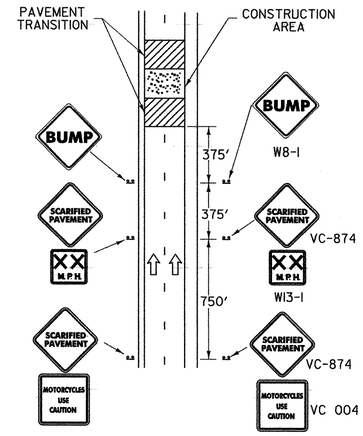

ADVANCED WARNING SIGN PACKAGE FOR COLD PLANED (SCARIFIED) SURFACES DIVIDED HIGHWAY

NOT TO SCALE

NOTES

1. ADVISORY SPEED AS DETERMINED BY THE RESIDENT ENGINEER (40 MPH MINIMUM RECOMMENDED).
2. ALL SIGNS SHALL BE MOUNTED ON FIXED POSTS (YIELDING TYPE).
3. ALL DISTANCES ARE DESIRABLE MINIMUMS, FIELD CONDITIONS SHALL CONTROL THE ACTUAL PLACEMENT.
4. THE BUMP SIGN MAY BE ELIMINATED WHEN THERE IS NO BUMP. WHEN THE CONTRACTOR IS WORKING IN THE CONSTRUCTION AREA THE APPROPRIATE ADVANCED WARNING SIGN PACKAGE SHALL BE USED, SEE STD.E-103.
5. GATE POSTING OF SIGNS IS AN OPTION AS DETERMINED BY THE RESIDENT ENGINEER (WHEN PASSING, TURNING OR CLIMBING LANES LIMIT VISIBILITY).

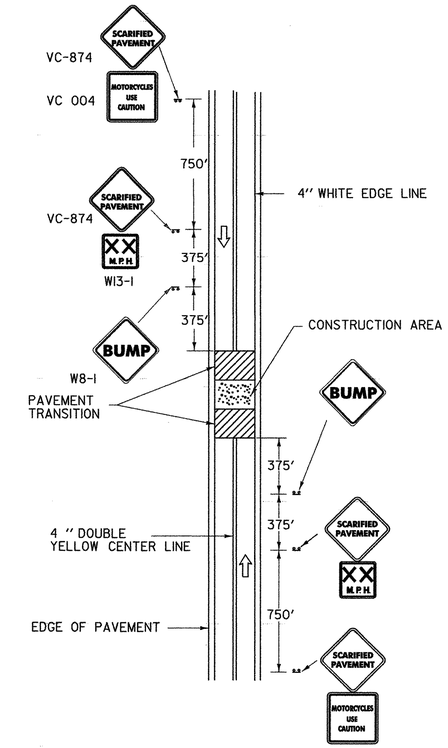

ADVANCED WARNING SIGN PACKAGE FOR COLD PLANED (SCARIFIED) SURFACES 2 LANE ROADWAY

NOT TO SCALE

NOTES

1. ADVISORY SPEED AS DETERMINED BY THE RESIDENT ENGINEER (40 MPH MINIMUM RECOMMENDED).
2. ALL SIGNS SHALL BE MOUNTED ON FIXED POSTS (YIELDING TYPE).
3. ALL DISTANCES ARE DESIRABLE MINIMUMS, FIELD CONDITIONS SHALL CONTROL THE ACTUAL PLACEMENT.
4. THE BUMP SIGN MAY BE ELIMINATED WHEN THERE IS NO BUMP. WHEN THE CONTRACTOR IS WORKING IN THE CONSTRUCTION AREA THE APPROPRIATE ADVANCED WARNING SIGN PACKAGE SHALL BE USED, SEE STD.E-110.
5. GATE POSTING OF SIGNS IS AN OPTION AS DETERMINED BY THE RESIDENT ENGINEER (WHEN PASSING, TURNING OR CLIMBING LANES LIMIT VISIBILITY).

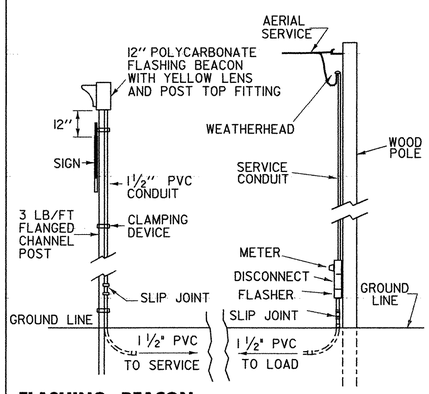

FLASHING BEACON DETAIL

AERIAL SERVICE WITHOUT LUMINAIRE

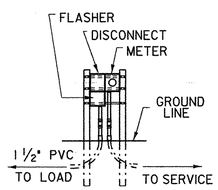

UNDERGROUND SERVICE DETAIL

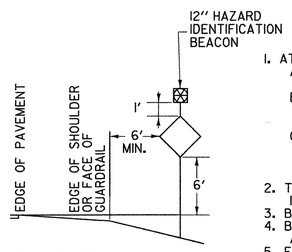

SIGN PLACEMENT DETAIL

NOTES

1. AT THE CONTRACTOR'S OPTION:
   A. THE POWER SUPPLY MAY BE AERIAL OR UNDERGROUND (SEE DETAIL).
   B. POWER FOR A FLASHING BEACON MAY BE COMBINED WITH POWER FOR A TRAFFIC SIGNAL OR THEY MAY HAVE SEPARATE POWER SOURCES.
   C. THE FLASHER MAY BE INSTALLED ON A STANCHION NEAR THE SIGN, ON A UTILITY POLE (WITH UTILITY COMPANY APPROVAL) OR AT THE SAME LOCATION AS A TRAFFIC SIGNAL CONTROLLER.
2. THE FLASHER UNIT SHALL BE ONE CIRCUIT AND INCLUDE A RADIO INTERFERENCE FILTER.
3. BATTERY OPERATED FLASHERS WILL NOT BE ALLOWED.
4. BOTTOM OF THE BEACON SHALL BE A MIN. OF 8' AND A MAX. OF 12' ABOVE THE EDGE OF THE PAVEMENT.
5. FOR URBAN AREA PLACEMENT SEE STD. E-121.
6. FOR POWER DROP STANCHIONS SEE STD. E-175

CHANNELIZING DEVICES

TAPER RATES ARE DETERMINED USING THE FOLLOWING EQUATION:

L = WS FOR DESIGN SPEEDS OF 45 MPH OR GREATER

L = $WS^2/60$ FOR DESIGN SPEEDS OF 40 MPH OR LESS

WHERE: L = MINIMUM LENGTH OF TAPER IN FEET

W = WIDTH OF OFFSET (USUALLY LANE WIDTH) IN FEET

S = DESIGN SPEED IN MPH

POSTED SPEED OR 85th PERCENTILE (mph)	DESIGN SPEED (mph)	TAPER LENGTHS (ft)			TANGENT SECTION LENGTHS (L/2) (ft)	MINIMUM BUFFER SPACE LENGTH (ft)	MAXIMUM CHANNELIZING DEVICE SPACING (ft)		BARRIER FLARE RATE (MIN)
		MERGING 12ft LANE (L)	SHIFTING W=16ft (L/2)	SHOULDER W=10ft (L/3)			TAPER	ALONG LANE LINE & WORK ZONE	
≤40	40	320	215	90	160	160	35	70	1:9
45	45	540	360	150	270	270	40	80	1:9
50	50	600	400	170	300	300	50	100	1:11
55	55	660	440	185	330	330	55	110	1:13
60 & 65	60	720	480	200	360	360	60	120	1:13
70	70	840	560	235	420	440	65	130	1:13

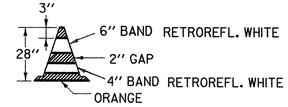

28" REFLECTORIZED CONE

NOTES

1. 28" CONES SHALL BE USED ON ROADWAYS WITH SPEED LIMITS OF 35 MPH OR MORE AND ON ALL ROADWAYS DURING HOURS OF DARKNESS.
2. CONES MAY BE WEIGHTED TO PREVENT OVERTURNING, HOWEVER THE WEIGHTS SHALL NOT PRESENT A HAZARD IF THE CONE IS STRUCK.
3. RETROREFLECTIVE SHEETING SHALL BE ASTM TYPE III OR TYPE VI.

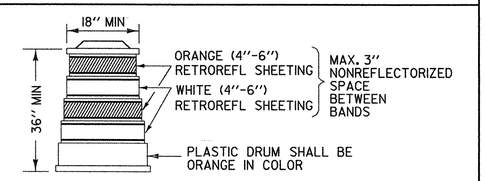

REFLECTORIZED PLASTIC DRUM

SAND BAGS OR AN APPROPRIATE BALLASTING DEVICE, WHICH DOES NOT PRESENT A HAZARD TO THE IMPACTING VEHICLE OR BECOME A PROJECTILE UPON IMPACT, SHALL BE USED TO WEIGHT DRUMS. RETROREFLECTIVE SHEETING SHALL BE ASTM TYPE III OR TYPE VI.

OTHER STDS. E-101, E-102, E-102A, E-103, E-107A, E-110, E-121, E-136, E-150, E-175
REQUIRED:

REVISIONS AND CORRECTIONS

APR 12, 1988 - DATE OF ORIGINAL ISSUE
JAN 23, 1989 - REVISED EXIT SIGN - CLARIFIED EXIT TAPER
SEPT 20, 1993 - REVISED RAMP CLOSURES, FLASHING BEACON DETAILS AND MOVED TYPE III BARRICADE (MOD) TO STDE-107A
AUG 08, 1995 - REVISED BEACON SIZE
MAR. 01, 2004 - ADDED ADVANCED WARNING SIGN PACKAGE FOR COLD PLANED TWO WAY HIGHWAYS, CHANNELIZING DEVICES CHART

APPROVED

DIRECTOR OF PROGRAM DEVELOPMENT

TRAFFIC OPERATIONS ENGINEER

FEDERAL HIGHWAY ADMINSTRATION

TRAFFIC CONTROL MISCELLANEOUS DETAILS

VERMONT AGENCY OF TRANSPORTATION

STANDARD

E-106

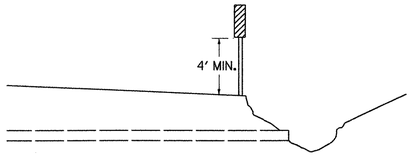

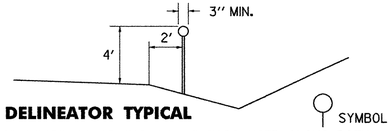

DELINEATOR TYPICAL

THE STANDARD COLOR FOR DELINEATORS USED ALONG BOTH SIDES OF TWO-WAY STREETS AND HIGHWAYS AND THE RIGHT SIDE OF ONE-WAY STREETS SHALL BE WHITE. DELINEATORS USED ALONG THE LEFT SIDE OF ONE-WAY ROADWAYS SHALL BE YELLOW THEY SHALL HAVE A MINIMUM AREA OF 7 SQUARE INCHES. THEY MAY BE ROUND, SQUARE OR OBLONG, FOR ALTERNATES SEE STD. E-198

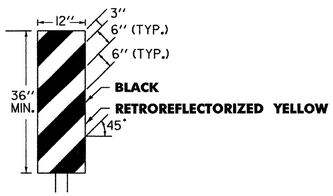

OBJECT MARKER TYPICAL

OBJECTS MARKERS ARE USED TO MARK OBSTRUCTIONS WITHIN OR ADJACENT TO THE ROADWAY. IN SOME CASES THERE MAY NOT BE A PHYSICAL OBJECT INVOLVED, BUT OTHER ROADSIDE CONDITIONS SUCH AS NARROW SHOULDER DROP-OFFS, GORES, D.I. EXCAVATIONS, AND ABRUPT CHANGES IN THE ROADWAY ALIGNMENT MAY MAKE IT UNDESIRABLE FOR A DRIVER TO LEAVE THE ROADWAY. THE INSIDE EDGE OF THE OBJECT MARKER SHALL BE IN LINE WITH THE INNER EDGE OF THE OBSTRUCTION, WHENEVER POSSIBLE.
OBJECT MARKERS SHALL HAVE ALTERNATING BLACK AND RETROREFLECTORIZED YELLOW STRIPES. (SLOPING DOWNWARD IN THE DIRECTION TRAFFIC IS TO PASS).

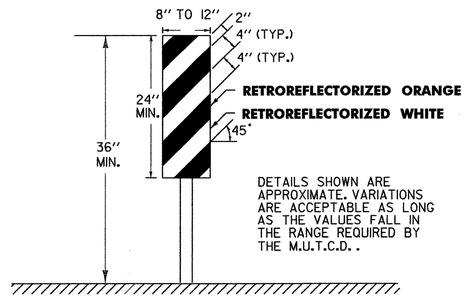

DETAILS SHOWN ARE APPROXIMATE. VARIATIONS ARE ACCEPTABLE AS LONG AS THE VALUES FALL IN THE RANGE REQUIRED BY THE M.U.T.C.D..

VERTICAL PANEL

VERTICAL PANELS SHALL HAVE ALTERNATING ORANGE AND WHITE RETROREFLECTORIZED STRIPES (SLOPING DOWNWARD IN THE DIRECTION TRAFFIC IS TO PASS). THESE DEVICES MAY BE USED FOR TRAFFIC SEPARATION, CHANNELIZING OR BARRICADING WHERE SPACE IS AT A MINIMUM.

DELINEATOR, VERTICAL PANEL AND OBJECT MARKER DETAILS FOR CONSTRUCTION AREAS WHERE TRAFFIC IS MAINTAINED

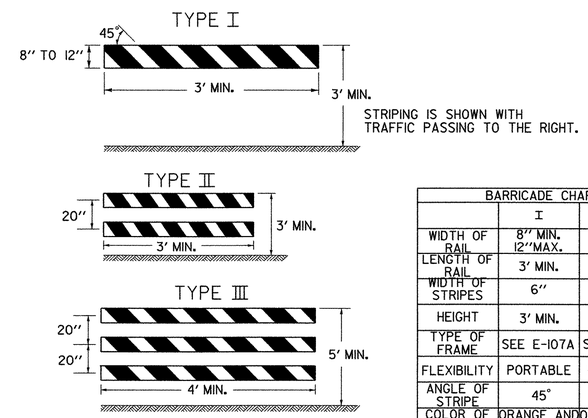

A TYPE III(MODIFIED) BARRICADE SHALL CONSIST OF TYPE II RAILS MOUNTED ON A BREAKAWAY BARRICADE AS SHOWN ON STANDARD SHEET E-107A.

BARRICADE CHARACTERISTICS			
	I	II	III
WIDTH OF RAIL	8" MIN. 12" MAX.	8" MIN. 12" MAX.	8" MIN. 12" MAX.
LENGTH OF RAIL	3' MIN.	3' MIN.	4' MIN.
WIDTH OF STRIPES	6"	6"	6"
HEIGHT	3' MIN.	3' MIN.	5' MIN.
TYPE OF FRAME	SEE E-107A	SEE E-107A	SEE E-107A
FLEXIBILITY	PORTABLE	PORTABLE	PORTABLE
ANGLE OF STRIPE	45°	45°	45°
COLOR OF STRIPES	ORANGE AND WHITE	ORANGE AND WHITE	ORANGE AND WHITE

BARRICADE CHARACTERISTICS

DETOUR DESIGN SPEED	MINIMUM RADIUS (FT.)[a] SUPERELEVATION (FT./FT.)				
(M.P.H.)	0.00[b]	0.02	0.04	0.06	0.08
20	160	140	130	120	110
25	245	220	200	185	170
30	375	335	305	275	255
35	510	455	410	375	340
40	715	630	575	510	470
50	1190	1045	955	850	765

a. PER AASHTO REQUIREMENTS
b. 0.00 SUPERELEVATION SHOULD BE AVOIDED IF POSSIBLE

BARRICADES

APPLICATION NOTES

TYPE I BARRICADES SHALL BE USED ON CONVENTIONAL ROADS OR URBAN STREETS AND ARTERIALS TO MARK A SPECIFIC HAZARD.

TYPE II BARRICADES SHALL BE USED ON EXPRESSWAYS AND FREEWAYS, SERVING THE SAME FUNCTIONS AS TYPE I BARRICADES.

TYPE III BARRICADES (SEE STD. E-107A) SHALL ONLY BE USED WHEN A ROAD SECTION OR LANE IS CLOSED TO TRAFFIC AND ARE TO BE ERECTED AT THE POINT OF CLOSURE.

MATERIALS

THE BARRICADES SHOWN ON THIS SHEET SHOULD BE OF LIGHTWEIGHT MATERIAL. IF WOOD IS USED THE FOLLOWING CONDITIONS SHALL APPLY:

1. WOODEN BARRICADES (TYPE I AND II)
   A) SHALL NOT BE USED TO CHANNELIZE OR DELINEATE WORK AREAS WITHIN THE CLEAR ZONE OF ANY HIGHWAY WHERE OPERATING SPEEDS IN EXCESS OF 20 M.P.H. ARE EXPECTED UNLESS INSTALLED FOR PEDESTRIAN CONTROL BEHIND APPROVED POSITIVE BARRIERS.
   B) MAY BE USED WHERE OPERATING SPEEDS OF 20 M.P.H. OR LESS ARE EXPECTED.
2. TYPE III WOODEN BARRICADES SHALL NOT BE USED.

COLORS

THE BARRICADE PANELS SHOWN ON THIS SHEET SHALL HAVE ALTERNATING RETRO-REFLECTORIZED WHITE AND ORANGE STRIPES. THE ORANGE SHALL CONFORM WITH THE STANDARD COLORS ADOPTED BY AMERICAN ASSOCIATION OF STATE HIGHWAY AND TRANSPORTATION OFFICALS AND APPROVED BY THE US DEPARTMENT OF TRANSPORTATION FEDERAL HIGHWAY ADMINISTRATION. THE BARRICADE COMPONENTS SHALL BE WHITE UNLESS UNPAINTED METAL OR ALUMINUM IS USED.

REFLECTORIZATION

THE RETROREFLECTIVE SHEETING ON BARRICADE PANELS SHALL BE ASTM TYPE III.

LOCATION

THE BARRICADES SHOWN ON THIS SHEET WILL BE LOCATED BY THE RESIDENT ENGINEER IN THE FIELD OR AS SHOWN ON THE PLANS. THE LOCATION OF THE BARRICADES SHALL FOLLOW THE PROCEDURES SET FORTH IN THE ''MANUAL ON UNIFORM TRAFFIC CONTROL DEVICES'', OR AS OTHERWISE NOTED.

MAINTENANCE

BARRICADES SHALL BE MAINTAINED IN CLEAN CONDITION, SATISFACTORY TO THE RESIDENT ENGINEER. THEY SHALL BE COMPLETELY VISIBLE TO THE APPROACHING TRAFFIC AT ALL TIMES. DAMAGED, DEFACED, OR DIRTY BARRICADES SHALL BE REPAIRED, CLEANED, OR REPLACED AS ORDERED BY THE RESIDENT ENGINEER.

ALL SIGN PLACEMENT DISTANCES ARE DESIRABLE SPECIFICATIONS. FIELD CONDITIONS SHALL CONTROL THE ACTUAL PLACEMENT. PROJECT CONSTRUCTION APPROACH SIGNING PLACEMENT SHALL TAKE INTO CONSIDERATION SPACING REQUIREMENTS FOR THE DETOUR SIGN LAYOUT REQUIREMENTS.

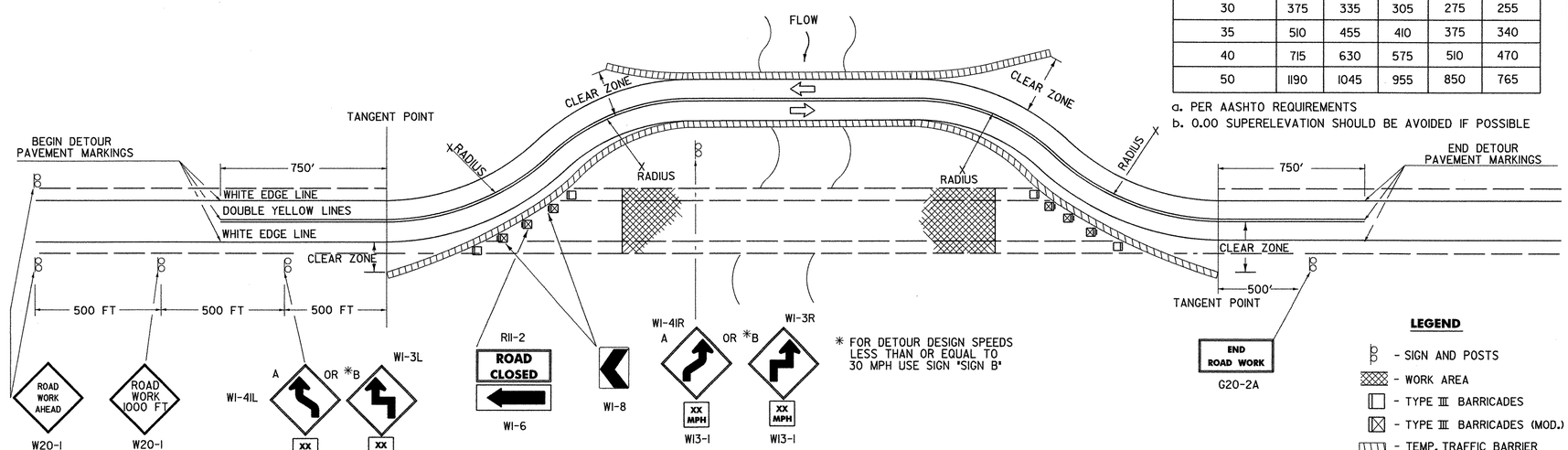

TRAFFIC CONTROL PLAN TWO LANE HIGHWAY PAVED DETOUR WITH TEMPORARY TRAFFIC BARRIER

DETOUR NOTES

1.) SIGNS AND DELINEATION SHOWN FOR ONE DIRECTION OF TRAFFIC ONLY.

2.) THE CONTRACTOR IS RESPONSIBLE FOR PAVEMENT MARKING AND SHALL REMOVE ANY CONFLICTING OR CONFUSING EXISTING MARKINGS.

3.) ADDITIONAL SIGNING MAY BE REQUIRED AT THE DISCRETION OF THE RESIDENT ENGINEER.

4.) UNPAVED DETOURS REQUIRE PAVEMENT MARKINGS FOR TRANSITIONS FROM EXISTING PAVEMENT.

5.) THE NUMBER OF CHANNELIZING DEVICES, BARRICADES AND OTHER TRAFFIC CONTROL DEVICES SHOWN ON THIS SHEET ARE FOR ILLUSTRATIVE PURPOSES ONLY. THE ACTUAL NUMBER REQUIRED SHALL BE DETERMINED BASED ON INDIVIDUAL DETOUR CONDITIONS (TAPERS, SPEED LIMITS, LENGTH OF DETOUR CURVE, ETC.).

6.) AASHTO CLEAR ZONE REQUIREMENTS SHOULD BE MET. IF NOT THEN AN APPROVED ENERGY ABSORPTION ATTENUATOR (SUITABLE FOR THE TEMPORARY TRAFFIC BARRIER USED AND FOR THE DESIGN SPEED) SHALL BE INSTALLED PER THE CURRENT AASHTO ROADSIDE DESIGN GUIDE.

7.) THE DETOUR DESIGN SPEED SHOULD BE NO LESS THAN 10 M.P.H. BELOW THE POSTED SPEED LIMIT, UNLESS PHYSICAL RESTRICTIONS PREVENT THIS.

8.) SEE STANDARD SHEETS E-100, E-101 AND E-102 FOR SIGN DETAIL AND MATERIAL REQUIREMENTS.

9.) IF THE USE OF TEMPORARY TRAFFIC BARRIER IS NOT REQUIRED, THEN REFLECTORIZED PLASTIC DRUMS SHALL BE USED.

OTHER STDS. REQUIRED: E-100, E-101, E-102, E-102a, E-107a, E-198

REVISIONS AND CORRECTIONS
SEPT. 10, 1987 - DATE OF ORIGINAL ISSUE
APRIL 29, 1988 - FHWA REVIEW COMMENTS
SEPT. 20, 1993 - NEW RADIUS CHART, BARRICADE ALIGNMENT AND USE OF TEMPORARY TRAFFIC BARRIER
AUG. 08, 1995 - REVISED SIGNING PER MUTCD
JUNE 30, 2003 - CHANGED REFLECTIVE SHEETING TO TYPE III

APPROVED
DIRECTOR OF PROGRAM DEVELOPMENT
TRAFFIC OPERATIONS ENGINEER
FEDERAL HIGHWAY ADMINISTRATION

DELINEATION, BARRICADES AND DETOURS FOR CONSTRUCTION AREAS

VERMONT AGENCY OF TRANSPORTATION

STANDARD
E-107

DROP-OFF ADJACENT TO TRAVELED WAY

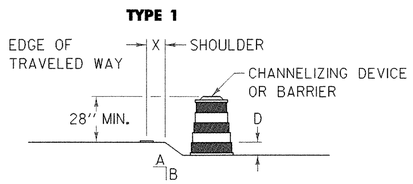

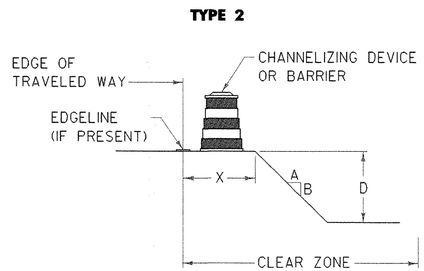

NOTES:

1. CHANNELIZING DEVICES OR BARRIER SHOULD BE PLACED TO MAXIMIZE THE WIDTH OF THE TRAVELED WAY.
2. FOR SPECIFIC REQUIREMENTS USE CHART "A".
3. IF THE DROP-OFF REQUIRES CHANNELIZING DEVICES TO REMAIN IN PLACE OVERNIGHT THEN "LOW SHOULDER" (W8-9) OR "SHOULDER DROP OFF" (W8-9A) SIGNS SHOULD BE INSTALLED.

DROP-OFF BETWEEN ADJACENT TRAVELED LANE

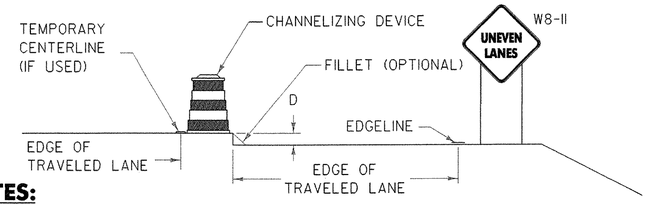

NOTES:

1. WHENEVER A LONGITUDINAL DROP-OFF BETWEEN ADJACENT TRAVELED LANES IS TO BE LEFT OVERNIGHT THEN "UNEVEN LANES" (W8-11) SIGNS AND CHANNELIZING DEVICES SHOULD BE INSTALLED.
2. IF REQUIRED, THE CHANNELIZING DEVICES USED SHALL BE THOSE WHICH MAXIMIZE THE TRAVELED LANE (I.E. CONES, VERTICAL PANELS OR TUBULAR MARKERS).
3. A BITUMINOUS CONCRETE FILLET WITH A 1.5:1 SLOPE MAY BE USED IN PLACE OF CHANNELIZING DEVICES, HOWEVER THE "UNEVEN LANES" (W8-11) SIGNS SHOULD BE INSTALLED REGARDLESS.
4. FOR SPECIFIC REQUIREMENTS USE CHART "A".

DROP-OFF BEYOND SHOULDER OR CURB

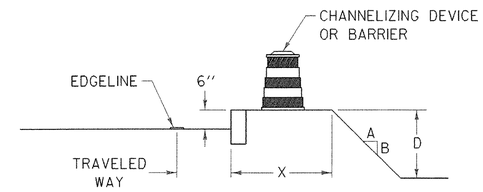

NOTES:

1. CHANNELIZING DEVICES OR BARRIER SHOULD BE PLACED TO MAXIMIZE THE WIDTH OF THE TRAVELED WAY.
2. FOR SPECIFIC REQUIREMENTS USE CHART "A" OR "B" AS APPLICABLE.

CHART "A"
ALL SPEEDS WITH NO CURB

X (FEET)	DROP (D) (INCHES)	A/B SLOPE	DEVICE REQUIRED
0 TO 4'	LESS THAN 2"	ANY	NONE
	2" TO 6"	1.5:1 OR FLATTER	NONE
		STEEPER THAN 1.5:1	CHANNELIZING DEVICE
	GREATER THAN 6"	3:1 OR FLATTER	NONE
		STEEPER THAN 3:1	BARRIER/CHANNELIZING DEVICE
4' TO 10'	LESS THAN 6"	ANY	NONE
	6" TO 12"	3:1 OR FLATTER	NONE
		STEEPER THAN 3:1	BARRIER/CHANNELIZING DEVICE
	GREATER THAN 12"	3:1 OR FLATTER	NONE
		STEEPER THAN 3:1	BARRIER/CHANNELIZING DEVICE
10' TO CZ	LESS THAN OR EQUAL TO 12"	ANY	NONE
	GREATER THAN 12"	3:1 OR FLATTER	NONE
		STEEPER THAN 3:1	BARRIER

NOTES:

1. THE MINIMUM CLEAR ZONE FOR FREEWAYS IS TO BE DETERMINED PER THE CURRENT "AMERICAN ASSOCIATION OF STATE HIGHWAY TRANSPORTATION OFFICIALS" (AASHTO) ROADSIDE DESIGN GUIDE. ALL OTHER HIGHWAYS WILL BE DETERMINED PER THE CURRENT "VERMONT STATE STANDARDS" BOOK.
2. CHANNELIZING DEVICES MAY BE USED INSTEAD OF BARRIER FOR SHORT TERM (ONE-DAY) OPERATIONS.
3. ON BORDERLINE CONDITIONS, THE ENGINEER SHOULD DETERMINE WHICH TREATMENT IS ADEQUATE FOR THE EXISTING CONDITIONS.

CHART "B"
40 MPH OR LESS WITH CURB

X (FEET)	DROP (D) (INCHES)	DEVICE REQUIRED
0-10'	LESS THAN OR EQUAL TO 12"	NONE
0-10'	GREATER THAN 12"	CHANNELIZING DEVICE
GREATER THAN 10'	ANY	NONE

NOTES:

1. USE THIS CHART FOR DROP-OFF BEYOND SHOULDER OR CURB.
2. USE THIS CHART FOR VERTICAL CURBS OF SIX INCHES OR GREATER. FOR LOWER OR MOUNTABLE CURBS USE CHART "A".
3. FOR CURBED SECTIONS WITH POSTED SPEED ABOVE 40 MPH, USE CHART "A".

GENERAL NOTES:

1. THESE CONDITIONS AND TREATMENTS ARE ONLY PART OF THE TRAFFIC CONTROL SYSTEM AND SHOULD BE USED IN ADDITION TO THE PROPER WORK ZONE SIGNING.
2. THE FOLLOWING ARE ACCEPTABLE CHANNELIZING DEVICES:

   A. VERTICAL PANEL
   B. TYPE I OR TYPE II BARRICADE
   C. PLASTIC DRUM
   * D. CONE - WHERE APPLICABLE
   E. TUBULAR MARKERS (MUTCD)

   * IF CHANNELIZING DEVICES ARE REQUIRED TO REMAIN IN PLACE DURING NIGHTTIME HOURS, CONES SHALL BE A MINIMUM OF 36 INCHES HIGH.

3. WHERE BARRIER IS CALLED FOR, EITHER CONCRETE BARRIER (JERSEY SHAPE), STEEL BEAM GUARDRAIL OR OTHER FEDERAL HIGHWAY ADMINISTRATION (FHWA) APPROVED BARRIER MAY BE USED.

   BARRIER ENDS FACING ONCOMING TRAFFIC SHALL BE TAPERED BEYOND THE CLEAR ZONE OR PROTECTED WITH AN APPROVED END TREATMENT DESIGNED FOR THE POSTED SPEED LIMIT OF THE ROADWAY.

4. CHANNELIZING DEVICE SPACING ALONG A LONGITUDINAL DROP-OFF (TANGENT) SHALL BE AS FOLLOWS:

   TANGENT - CHANNELIZING DEVICES SHALL BE SPACED "2S" ("S" IS THE POSTED SPEED LIMIT IN FEET) APART.

5. "LOW SHOULDER" (W8-9), "SHOULDER DROP OFF" (W8-9A) OR "UNEVEN LANES" (W8-11) SIGNS, WHEN USED, SHOULD BEGIN PRIOR TO THE DROP-OFF CONDITION AND SHOULD BE REPEATED EVERY 1500 FEET.
6. USE CHART "A" FOR DROP OFFS CREATED BY PROJECT ACTIVITIES.

OTHER STDS. REQUIRED: **E-101, E-106, E-107, E-107A**

REVISIONS AND CORRECTIONS

SEPT. 20, 1993 - ORIGINAL APPROVAL DATE
AUG. 18, 1995 - ADDED SHOULDER WARNING NOTE
DEC. 8, 2008 - GENERAL UPDATE
JUN. 8, 2009 - MINOR REVISIONS

APPROVED

Kevin A. Marshia
HIGHWAY, SAFETY & DESIGN ENGINEER

Richard Tetreault
DIRECTOR OF PROGRAM DEVELOPMENT

Mark D. Richter
FEDERAL HIGHWAY ADMINISTRATION

CONSTRUCTION ZONE LONGITUDINAL DROP OFFS

VERMONT AGENCY OF TRANSPORTATION

STANDARD
E-108

DROP-OFF ADJACENT TO TRAVELED WAY

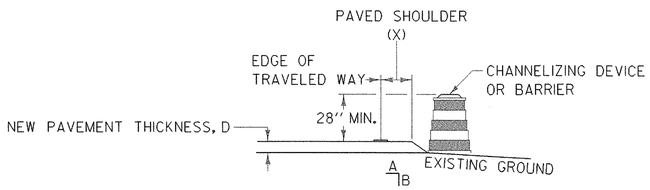

NOTES:

1. CHANNELIZING DEVICES SHOULD BE PLACED TO MAXIMIZE THE WIDTH OF THE TRAVELED WAY.
2. FOR SPECIFIC REQUIREMENTS USE CHART "A".
3. IF THE DROP-OFF REQUIRES CHANNELIZING DEVICES TO REMAIN IN PLACE OVERNIGHT THEN "LOW SHOULDER" (W8-9) OR "SHOULDER DROP OFF" (W8-9A) SIGNS SHOULD BE INSTALLED.

DROP-OFF BETWEEN ADJACENT TRAVELED LANE

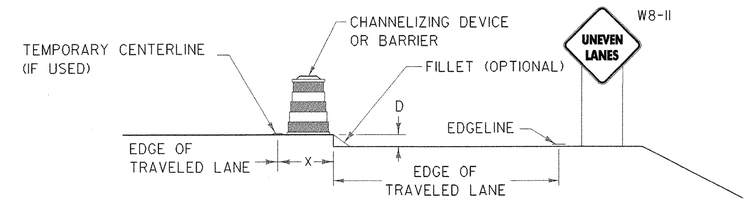

NOTES:

1. WHENEVER A LONGITUDINAL DROP-OFF BETWEEN ADJACENT TRAVELED LANES IS TO BE LEFT OVERNIGHT THEN "UNEVEN LANES" (W8-11) SIGNS SHOULD BE INSTALLED. CHANNELIZING DEVICES SHOULD BE INSTALLED IF THE REQUIREMENTS OF CHART "A" ARE MET.
2. IF REQUIRED, THE CHANNELIZING DEVICES USED SHALL BE THOSE WHICH MAXIMIZE THE WIDTH OF THE TRAVELED LANE (I.E. CONES, VERTICAL PANELS OR TUBULAR MARKERS).
3. FOR SPECIFIC REQUIREMENTS USE CHART "A".

CHART "A"
ALL SPEEDS WITH NO CURB

X (FEET)	DROP (D) (INCHES)	A/B SLOPE	DEVICE REQUIRED
0 TO 4'	LESS THAN 2"	ANY	NONE
	2" TO 6"	1.5:1 OR FLATTER	NONE
		STEEPER THAN 1.5:1	CHANNELIZING DEVICE
	GREATER THAN 6"	3:1 OR FLATTER	NONE
		STEEPER THAN 3:1	BARRIER/CHANNELIZING DEVICE
4' TO 10'	LESS THAN 6"	ANY	NONE
	6" TO 12"	3:1 OR FLATTER	NONE
		STEEPER THAN 3:1	BARRIER/CHANNELIZING DEVICE

NOTE:

1. ON BORDERLINE CONDITIONS, THE ENGINEER SHOULD DETERMINE WHICH TREATMENT IS ADEQUATE FOR THE EXISTING CONDITIONS.

GENERAL NOTES:

1. THESE CONDITIONS AND TREATMENTS ARE ONLY PART OF THE TRAFFIC CONTROL SYSTEM AND SHOULD BE USED IN ADDITION TO THE PROPER WORK ZONE SIGNING.
2. THE FOLLOWING ARE ACCEPTABLE CHANNELIZING DEVICES:

   A. VERTICAL PANEL
   B. TYPE I OR TYPE II BARRICADE
   C. PLASTIC DRUM
   * D. CONE - WHERE APPLICABLE
   E. TUBULAR MARKERS (MUTCD)

   * IF CHANNELIZING DEVICES ARE REQUIRED TO REMAIN IN PLACE DURING NIGHTTIME HOURS, CONES SHALL BE A MINIMUM OF 36 INCHES HIGH.

3. WHERE BARRIER IS CALLED FOR, EITHER CONCRETE BARRIER (JERSEY SHAPE), STEEL BEAM GUARDRAIL OR OTHER FEDERAL HIGHWAY ADMINISTRATION (FHWA) APPROVED BARRIER MAY BE USED.

   BARRIER ENDS FACING ONCOMING TRAFFIC SHALL BE TAPERED BEYOND THE CLEAR ZONE OR PROTECTED WITH AN APPROVED END TREATMENT DESIGNED FOR THE POSTED SPEED LIMIT OF THE ROADWAY.

4. CHANNELIZING DEVICE SPACING ALONG A LONGITUDINAL DROP-OFF (TANGENT) SHALL BE AS FOLLOWS:

   TANGENT - CHANNELIZING DEVICES SHALL BE SPACED "2S" ("S" IS THE POSTED SPEED LIMIT IN FEET) APART.

5. "LOW SHOULDER" (W8-9), "SHOULDER DROP OFF" (W8-9A) OR "UNEVEN LANES" (W8-11) SIGNS, WHEN USED, SHOULD BEGIN PRIOR TO THE DROP-OFF CONDITION AND SHOULD BE REPEATED EVERY 1500 FEET.
6. USE CHART "A" FOR DROP OFFS CREATED BY PROJECT ACTIVITIES.

OTHER STDS. REQUIRED: **E-101, E-106, E-107, E-107A**

REVISIONS AND CORRECTIONS

DEC. 8, 2008 - ORIGINAL APPROVAL DATE
JUN. 8, 2009 - MINOR REVISIONS

APPROVED

Kevin S. Marshia
HIGHWAY, SAFETY & DESIGN ENGINEER

Richard Fitzhugh
DIRECTOR OF PROGRAM DEVELOPMENT

Mark D. Richter
FEDERAL HIGHWAY ADMINISTRATION

CONSTRUCTION ZONE LONGITUDINAL DROP OFFS FOR PAVING

VERMONT AGENCY OF TRANSPORTATION

STANDARD
E-108 A

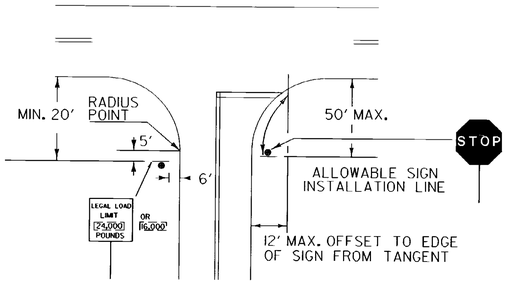

STOP SIGN SHALL BE PLACED ON DRIVERS RIGHT. MAINTAINING MAXIMUM VISIBLITY. CLEARANCE SHALL BE A MINIMUM OF 6' AND A MAXIMUM OF 50' FROM EDGE LINE OF INTERSECTING ROADWAY AND DOES NOT HAVE TO BE ADJACENT TO THE STOP BAR.

LEGAL LOAD LIMIT AND STOP SIGNS AT INTERSECTIONS WITH TOWN HIGHWAYS

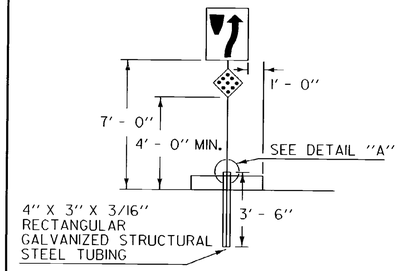

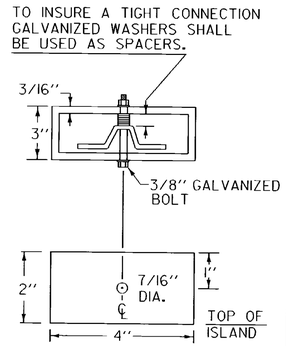

SLEEVE DETAIL "A"

SIGNS ON MEDIAN ISLANDS IN THE LINE OF TRAFFIC

INCREASE VERTICAL CLEARANCE TO 7' IN AREAS OF FREQUENT ROADSIDE PARKING OR PEDESTRIAN ACTIVITY

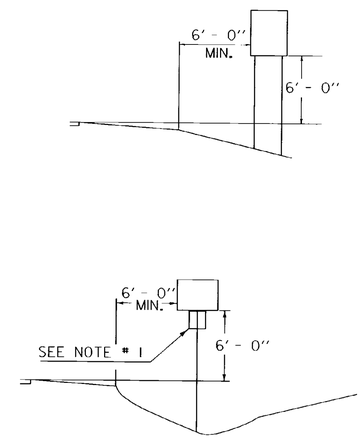

RURAL

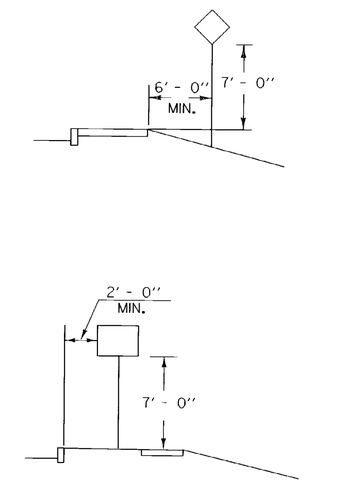

IF SUFFICIENT CLEARANCE IS NOT AVAILABLE BETWEEN CURB AND SIDEWALK MOUNT SIGN BEHIND SIDEWALK AS SHOWN AT TOP. CHECK FOR ADEQUATE R.O.W..

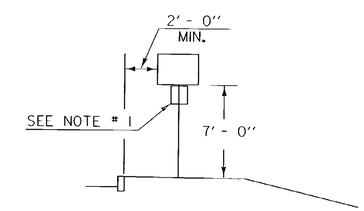

URBAN

NOTES:

1. IN BOTH RURAL AND URBAN LOCATIONS. IF A SECONDARY SIGN IS MOUNTED BELOW ANOTHER SIGN, THE MINIMUM CLEARANCE MAY BE REDUCED BY ONE FOOT.
2. IN RURAL AREAS WITH NO OR MINIMAL SHOULDER, THE LATERAL CLEARANCE TO THE EDGE OF A SIGN SHOULD BE A MINIMUM OF 12' FROM THE EDGE OF THE TRAVELED WAY.
3. ALSO SEE OTHER STANDARD SHEETS FOR MOUNTING CLEARANCE AND SPACING OF DESTINATION AND ROUTE MARKER ASSEMBLIES AND TOWN LINE SIGNS.

POST REFERENCE:

REFER TO THE DETAILS ON THE APPROPRIATE STANDARD DRAWING FOR INFORMATION CONCERNING THE PROPER MOUNTING OF SIGNS ON APPROPRIATE POSTS.

OTHER STDS. REQUIRED: E-160 E-161 E-162 E-163 E-164

REVISIONS AND CORRECTIONS

JAN. 23, 1995 - DATE OF ORIGINAL ISSUE

AUG. 08, 1995 - VARIOUS MINOR NOTE REVISIONS

APPROVED FOR THIS PROJECT AND/OR DESIGN IMPLEMENTATION. FHWA FINAL APPROVAL PENDING.

APPROVED

DIRECTOR OF ENGINEERING

TRAFFIC AND SAFETY ENGINEER

STANDARD SIGN PLACEMENT CONVENTIONAL ROAD

/traf/std/stdel21.dgn : stdel21.i

VERMONT AGENCY OF TRANSPORTATION

STANDARD

E-121

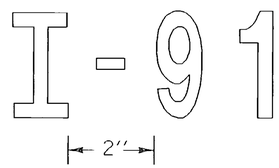

HYPHENATED WORD DETAIL

FOR EXAMPLE, ROUTE NUMBERS SHALL APPEAR AS: I-91, US5, VT22

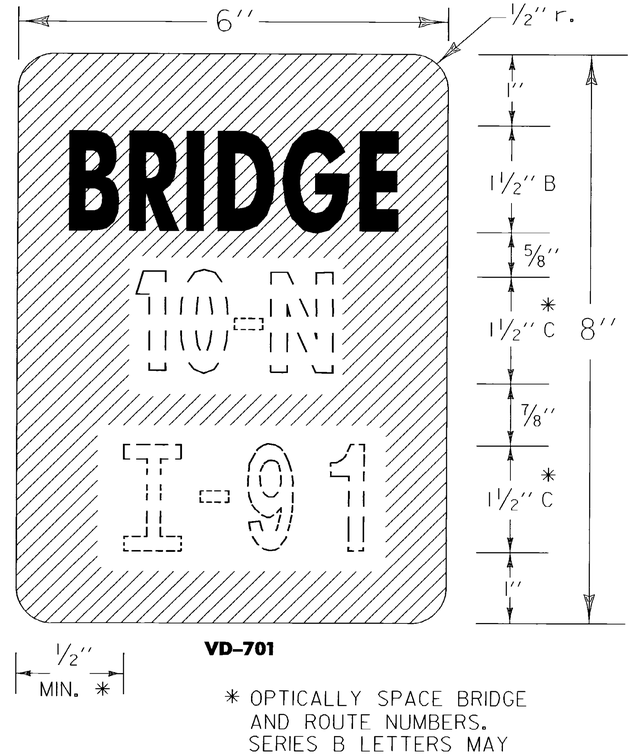

VD-701

* OPTICALLY SPACE BRIDGE AND ROUTE NUMBERS. SERIES B LETTERS MAY BE USED TO MAINTAIN VISUAL INTEGRITY.

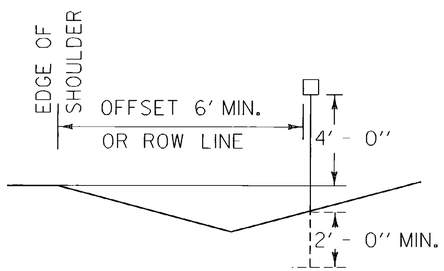

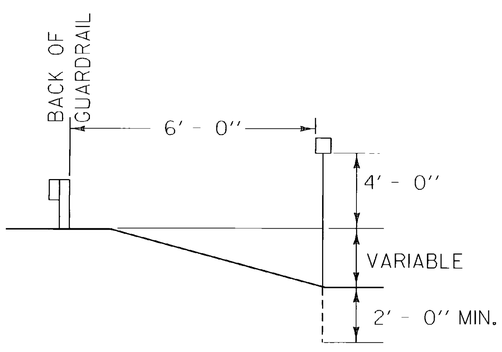

NOTES:

GENERAL:
DOTTED LINES AND NUMERALS INDICATE TEXT THAT VARIES.

PAYMENT:
BRIDGE PLAQUES SHALL BE PAID AS TRAFFIC SIGNS, TYPE 'A', AND POSTS PAID AS FLANGED CHANNEL STEEL SIGN POSTS.

MATERIAL:
THE SIGN BASE MATERIAL SHALL BE 0.04" FLAT SHEET ALUMINUM.

COLORS:
THE SIGN SHALL HAVE A REFLECTORIZED WHITE TEXT ON REFLECTORIZED GREEN BACKROUND. THE COLORS SHALL CONFORM WITH THOSE FOUND IN STANDARD COLOR TOLERANCE CHARTS AS APPROVED BY THE U.S. DEPARTMENT OF TRANSPORTATION, FEDERAL HIGHWAYADMINISTRATION.

LETTERING:
LETTERS AND DIGITS SHALL CONFORM WITH THE STANDARD ALPHABETS FOR HIGHWAY SIGNS AS PRINTED BY THE FEDERAL HIGHWAY ADMINISTRATION.

POSTS:
FLANGED CHANNEL STEEL 2#/FT POSTS SHALL BE USED WHEN THE POST LENGTH EXCEEDS 7 FEET. FOR LENGTH OF 7 FEET OR LESS, A 1.12#/FT STEEL SIGN POST SHALL BE USED.

OTHER STDS. REQUIRED:

REVISIONS AND CORRECTIONS

DEC. 17, 1989 - DATE OF ORIGINAL ISSUE
AUG. 08, 1995 - MISC NOTE REVISIONS

APPROVED FOR THIS PROJECT AND/OR DESIGN IMPLEMENTATION. FHWA FINAL APPROVAL PENDING.

APPROVED

Gordon S. MacCallum
DIRECTOR OF ENGINEERING

David A. Ross
TRAFFIC AND SAFETY ENGINEER

BRIDGE NUMBER PLAQUE

/traf/std/stdel34.dgn : stdel34.i

VERMONT AGENCY OF TRANSPORTATION

STANDARD
E-134

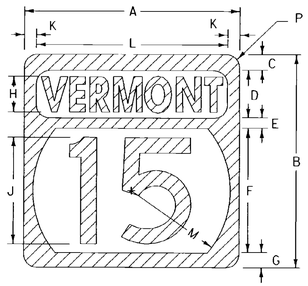

1 OR 2 DIGIT STATE ROUTE MARKER

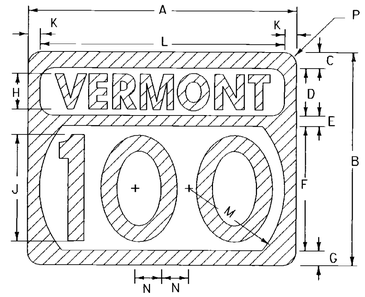

3 DIGIT STATE ROUTE MARKER

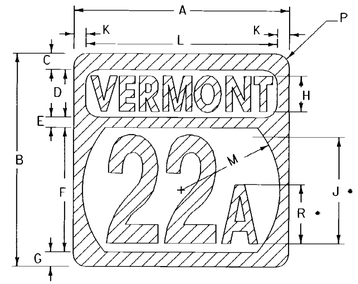

1 OR 2 DIGIT ALTERNATE STATE ROUTE MARKER

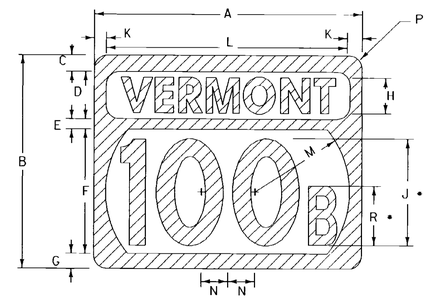

3 DIGIT ALTERNATE STATE ROUTE MARKER

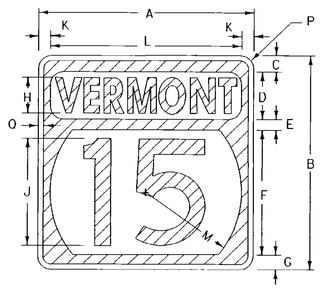

STATE ROUTE MARKER FOR GUIDE SIGN USE. (INTERSTATE TYPICAL)

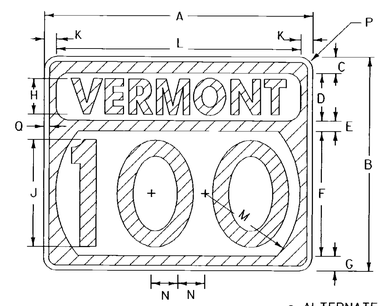

- ALTERNATE ROUTE SIGNS: OPTICALLY SPACE NUMERALS ABOUT VERTICAL CENTER-LINE AND REDUCE SPACING AS NECESSARY FOR EACH ROUTE

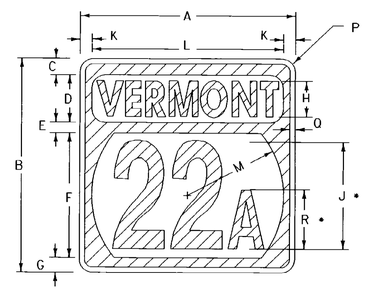

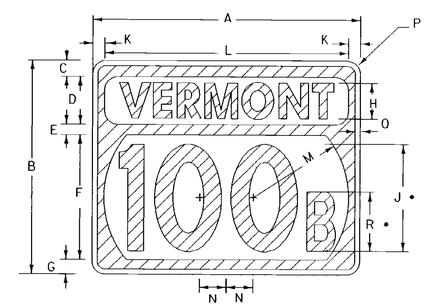

ALTERNATE STATE ROUTE MARKER FOR GUIDE SIGN USE. (INTERSTATE TYPICAL)

SIGN	DIMENSIONS (INCHES)															
	A	B	C	D	E	F	G	H	J	K	L	M	N	P	Q	R
1,2-digits	24	24	1½	6	1	14	1½	4C	12D	1	22	11	-	1½	½	7B
1,2-digits	36	36	2⅝	8	1¾	21	2⅝	6C	18D	2	32	16½	-	2¼	⅞	10B
3,-digits	30	24	1½	6	1	14	1½	4D	12D	1	28	11	3	1½	½	7B
3,-digits	45	36	2⅝	8	1¾	21	2⅝	6D	18D	2	41	16½	4½	2¼	⅞	10B

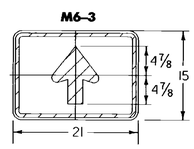

M6-3

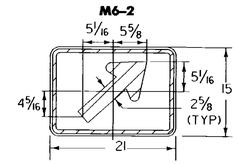

M6-2

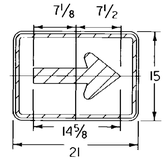

M6-1

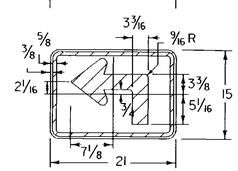

M5-1

DIRECTION ARROW OR ADVANCE TURN ARROWS

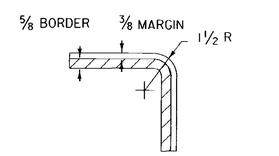

TYPICAL RADIUS DETAIL

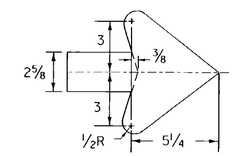

TYPICAL ARROW DETAIL

(ALL DIMENSIONS IN INCHES)

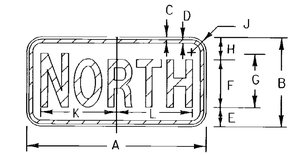

M3-1 M3-3 M3-2 M3-4

SIGN	DIMENSIONS (INCHES)									NORTH		SOUTH		EAST		WEST	
	A	B	C	D	E	F	G	H	J	K	L	K	L	K	L	K	L
MIN. & STD.	24	12	⅜	⅝	2¾	6C	7C	3¼	1½	10¼	10¼	10¼	9 19/16	7⅞	8⅜	8¾	8 13/16
SPECIAL	30	15	⅜	⅝	3¼	8C	9C	3¾	1½	12 11/16	12 11/16	12 11/16	12½	10⅜	11⅛	11⅝	11⅝

CARDINAL DIRECTION MARKER

M2-1

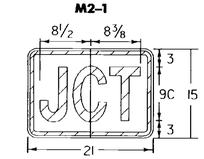

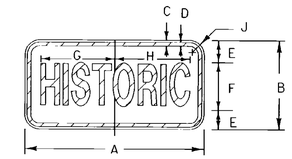

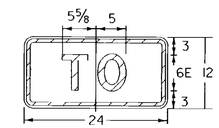

M4-5

TRAILBLAZER

SIGN	DIMENSIONS (INCHES)								
	A	B	C	D	E	F	G	H	J
MIN. & STD.	24	12	⅜	⅝	3½	5B	10⅛	9⅞	1½
SPECIAL	30	15	⅜	⅝	4	7B*	12⅜	12⅝	1½

* REDUCE SPACING 35%

MATERIALS

THE SIGN BASE MATERIAL MAY BE ANY OF THE FOLLOWING, WITH THE MINIMUM THICKNESSES AS NOTED:

FLAT SHEET ALUMINUM

LESS THAN 24'' X 24''	0.060''
WHEN USED ON GUIDE SIGNS	0.060''
24'' X 24'', 30'' X 24''	0.080''
36'' X 36'', 45'' X 36''	0.100''

GALVANIZED FLAT SHEET STEEL

LESS THAN 24'' X 24''	18 GAGE
WHEN USED ON GUIDE SIGNS	18 GAGE
24'' X 24'', 30'' X 24''	16 GAGE
36'' X 36'', 45'' X 36''	14 GAGE

THE REFLECTIVE MATERIAL SHALL BE WHITE REFLECTIVE SHEETING APPLIED TO THE ENTIRE BACKGROUND. THE TEXTS MAY BE LETTERING FILM, SILK SCREENED, OR HAND PAINTED.

COLORS

COLORS FOR GUIDE USE: TEXT AND SHIELD - GREEN (REFL.) BACKGROUND AND BORDER - WHITE (REFL.)
STATE ROUTE MARKERS SHALL HAVE REFLECTIVE GREEN TEXT AND BORDERS ON REFLECTORIZED WHITE BACKGROUNDS.

GREEN AREAS ARE INDICATED BY SINGLE LINE CROSSHATCHING

LETTERING

LETTERS AND DIGITS SHALL CONFORM WITH THE ''STANDARD ALPHABET FOR HIGHWAY SIGNS AND PAVEMENT MARKINGS'' ADOPTED BY THE U.S. DEPARTMENT OF TRANSPORTATION AND FHWA.

SPECIFICATIONS

STATE ROUTE MARKERS AND AUXILIARY ROUTE MARKERS SHALL MEET THE STANDARD STATE SPECIFICATIONS FOR TRAFFIC SIGNS.

DESIGNS

THE DESIGNS OF STATE ROUTE MARKERS AND AUXILIARY MARKERS SHALL CONFORM WITH THE REQUIREMENTS SET FORTH IN THE ''MANUAL ON UNIFORM TRAFFIC CONTROL DEVICES'' ADOPTED BY THE U.S. DEPARTMENT OF TRANSPORTATION AND FHWA.

OTHER STDS. REQUIRED:

REVISIONS AND CORRECTIONS

AUG. 08, 1995 - DATE OF ORIGINAL ISSUE

APPROVED FOR THIS PROJECT AND/OR DESIGN IMPLEMENTATION. FHWA FINAL APPROVAL PENDING.

APPROVED

DIRECTOR OF ENGINEERING

TRAFFIC AND SAFETY ENGINEER

STATE ROUTE MARKER SIGN DETAILS

/traf/std/std136b.dgn : std136b.i

VERMONT AGENCY OF TRANSPORTATION

STANDARD E-136 B

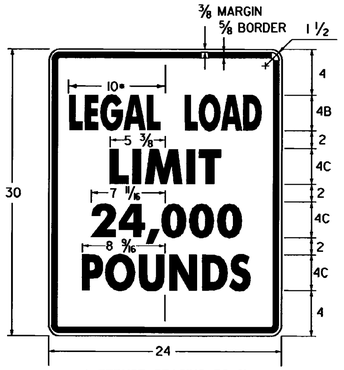

* REDUCE SPACING 50 %
LINE 3 ALTERNATE - 16,000

VR-017

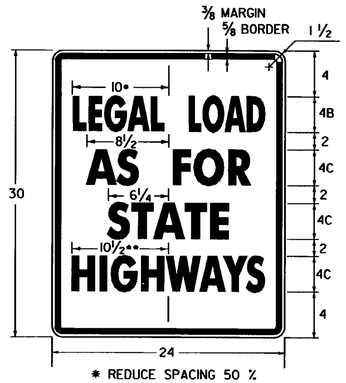

* REDUCE SPACING 50 %
** REDUCE SPACING 38 %

VR-079

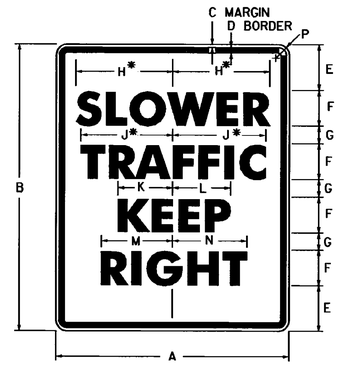

* REDUCE SPACING 25 %

R4-3

SIGN	DIMENSIONS (INCHES)													
	A	B	C	D	E	F	G	H	J	K	L	M	N	P
STD.	24	30	3/8	5/8	3 5/8	4D	2 1/4	9 3/4	10	6	6 9/16	7 1/8	7 5/8	1 1/2
EXPWY.	36	48	5/8	7/8	6	6D	4	14 5/8	15	9	9 13/16	10 11/16	11 3/8	2 1/4
FWY.	48	60	3/4	1 1/4	7 1/4	8D	4 1/2	19 1/2	20	12	13 1/8	14 1/4	15 1/4	3

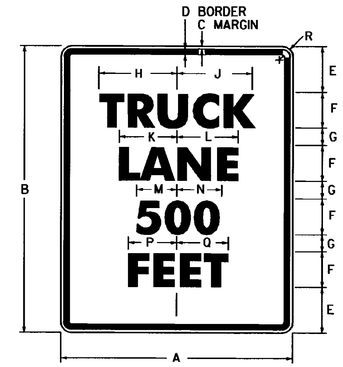

R4-6

SIGN	DIMENSIONS (INCHES)															
	A	B	C	D	E	F	G	H	J	K	L	M	N	P	Q	R
STD.	24	30	3/8	5/8	3 5/8	4E	2 1/4	9 13/16	9 11/16	7 9/16	7 11/16	5 11/16	5 13/16	6 7/8	7 1/16	1 1/2
EXPWY.	36	48	5/8	7/8	6	6E	4	14 3/4	14 1/2	11 5/16	11 1/2	8 1/2	8 3/4	10 5/16	10 5/8	2 1/4
FWY.	48	60	3/4	1 1/4	7 1/4	8E	4 1/2	19 5/8	19 3/8	15 1/8	15 3/8	11 3/8	11 5/8	13 3/4	14 1/8	3

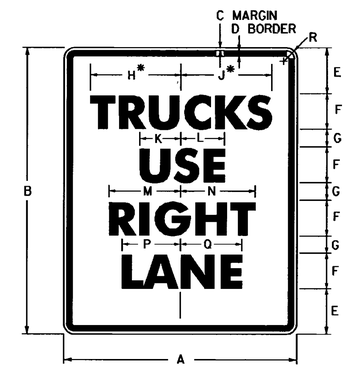

* REDUCE SPACING 32 %

R4-5

SIGN	DIMENSIONS (INCHES)															
	A	B	C	D	E	F	G	H	J	K	L	M	N	P	Q	R
STD.	24	30	3/8	5/8	3 5/8	4D	2 1/4	9 9/16	9 3/16	4 3/4	5	7 1/8	7 5/8	6 1/4	6 5/8	1 1/2
EXPWY.	36	48	5/8	7/8	6	6D	4	14 5/16	13 13/16	7 1/8	7 1/2	10 11/16	11 3/8	9 3/8	9 15/16	2 1/4
FWY.	48	60	3/4	1 1/4	7 1/4	8D	4 1/2	19 1/8	18 3/8	9 1/2	10	14 1/4	15 1/4	12 1/2	13 1/4	3

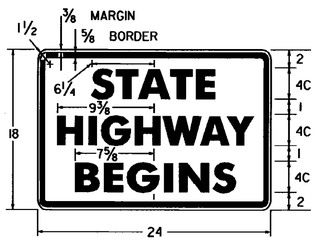

VR-039

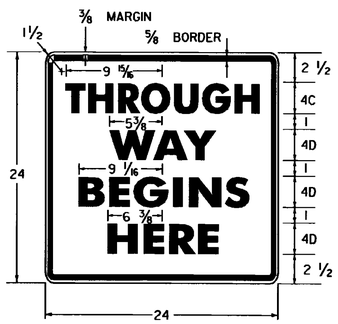

VR-041

VR-038

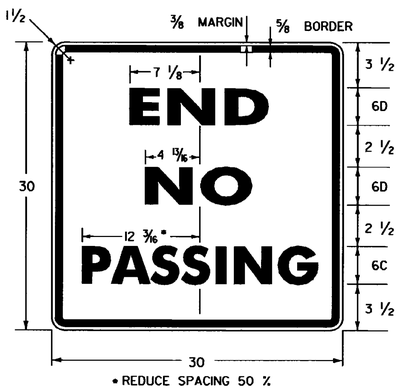

* REDUCE SPACING 50 %

VR-417

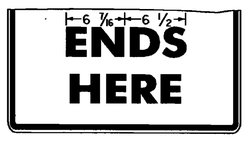

VR-040

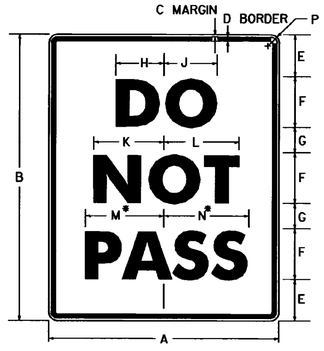

* REDUCE SPACING 40 %

R4-1

SIGN	DIMENSIONS (INCHES)													
	A	B	C	D	E	F	G	H	J	K	L	M	N	P
STD.	24	30	3/8	5/8	3 1/2	6D	2 1/2	4 11/16	5	7 1/8	7 3/8	9 3/8	9 3/4	1 1/2
EXPWY.	36	48	5/8	7/8	7	8D	5	6 1/4	6 5/8	9 1/2	9 3/4	12 1/2	13	2 1/4
FWY.	48	60	3/4	1 1/4	8	10D	7	7 3/4	8 5/16	11 7/8	12 1/4	15 5/8	16 1/4	3

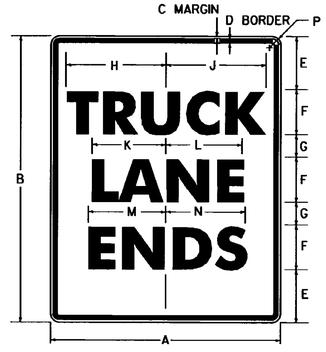

VR-186

SIGN	DIMENSIONS (INCHES)													
	A	B	C	D	E	F	G	H	J	K	L	M	N	P
STD.	24	30	3/8	5/8	3 1/2	6C	2 1/2	10 1/4	10 3/16	7 3/4	7 3/4	7 15/16	8	1 1/2
EXPWY.	36	48	5/8	7/8	7	8C	5	13 11/16	13 5/8	10 3/8	10 5/16	10 11/16	10 11/16	2 1/4
FWY.	48	60	3/4	1 1/4	8	10D	7	20 5/8	20 5/8	15 7/8	15 5/16	16 1/16	16 1/16	3

GENERAL:

1. ALL DIMENSIONS IN INCHES.

COLORS:

THE REGULATORY SIGNS SHOWN ON THIS SHEET SHALL HAVE BLACK TEXT ON REFLECTORIZED WHITE BACKGROUND, UNLESS OTHERWISE NOTED. THE COLORS SHALL CONFORM WITH THE COLORS ADOPTED BY THE AMERICAN ASSOCIATION OF STATE HIGHWAY AND TRANSPORTATION OFFICIALS AND APPROVED BY THE DEPARTMENT OF TRANSPORTATION, FEDERAL HIGHWAY ADMINISTRATION.

MATERIALS:

THE SIGN BASE MATERIALS USED FOR REGULATORY SIGNS SHOWN ON THIS SHEET MAY BE ANY OF THE FOLLOWING OF THE MINIMUM THICKNESS NOTED.

	24'' X 18'' 24'' X 24'' 24'' X 30'' 30'' X 30''	36'' X 48'' 48'' X 60''
FLAT SHEET ALUMINUM	0.080''	0.100''
HIGH DENSITY OVERLAID PLYWOOD	1/2''	5/8''
GALVANIZED FLAT SHEET STEEL	16 GAGE	14 GAGE

THE REFLECTIVE MATERIAL FOR GROUND MOUNTED SIGNS SHALL BE AASHTO TYPE II OR III WHITE REFLECTIVE SHEETING APPLIED TO THE ENTIRE BACKGROUND OF THE SIGN. THE THE TEXT OF THE SIGNS MAY BE LETTERING FILM, SILK SCREENED OR HAND PAINTED. HAND PAINTING MUST BE COMPARABLE IN QUALITY TO THE RESULTS OBTAINED BY SILK SCREENING.

SPECIFICATIONS:

REGULATORY SIGNS SHALL MEET THE VERMONT STANDARD SPECIFICATIONS FOR TRAFFIC SIGNS.

TEXT DESIGN:

LETTERS, DIGITS, ARROWS, SPACING AND TEXT DIMENSIONS SHALL CONFORM WITH THE ''STANDARD ALPHABET FOR HIGHWAY SIGNS AND PAVEMENT MARKINGS'' AND DESIGNS PRESCRIBED IN THE STANDARD HIGHWAY SIGNS AS SPECIFIED IN THE MANUAL ON UNIFORM TRAFFIC CONTROL DEVICES.

OTHER STDS.: NONE REQUIRED

REVISIONS AND CORRECTIONS

OCT. 30, 1987 - DATE OF ORIGINAL ISSUE
SEPT. 20, 1995 - ADDED AND DELETED SIGN DETAIL, ADDED SIGN ID NUMBERS, MINOR NOTE REVISIONS.

APPROVED FOR THIS PROJECT AND/OR DESIGN IMPLEMENTATION. FHWA FINAL APPROVAL PENDING.

APPROVED

DIRECTOR OF ENGINEERING

TRAFFIC AND SAFETY ENGINEER

REGULATORY SIGN DETAILS

/traf/std/stdel41.dgn : stdel41.I

VERMONT AGENCY OF TRANSPORTATION

STANDARD

E-141

GUARDRAIL DEFLECTION CHART

(PER AASHTO - ROADSIDE DESIGN GUIDE - LATEST EDITION)

TYPE	GR POST SPACING	DEFLECTION
THREE CABLE W/STEEL POSTS	16′ - 0″	11′ - 6″
W/WOODEN POSTS	12′ - 6″	11′ - 6″
W-BEAM W/STRONG POST	6′ - 3″	3′
BOX BEAM	6′ - 0″	5′
THRIE BEAM W/STRONG POST	6′ - 3″	2′

THIS CHART LISTS THE THEORETICAL MAXIMUM DEFLECTION DISTANCE, UPON IMPACT, OF DIFFERENT TYPES OF GUARDRAIL AND VARIOUS POST SPACINGS.

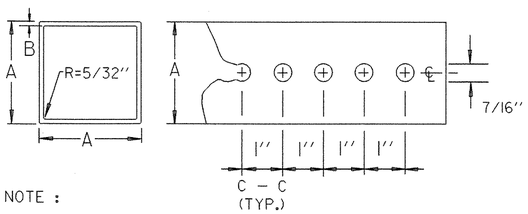

NOTE :

THE POSTS SHALL BE CAREFULLY FORMED OF STEEL WITH A MINIMUM YIELD OF 55,000 PSI, INTO A SIZE AND SHAPE WITH CORNERS INDUCTION WELDED IN SUCH A MANNER THAT NEITHER FLASH NOR WELD SHALL INTERFERE WITH THE TELESCOPING PROPERTIES, NOR DAMAGE THE GALVANIZING.

* THE WALL THICKNESS TOLERANCES SHALL BE +.005″ AND -.010″ FOR THE 12 GAUGE.
* THE WALL THICKNESS TOLERANCES SHALL BE +.002″ AND -.008″ FOR THE 14 GAUGE.

DIMENSION DETAILS AND POST SELECTION CHART

POST SELECTION CHART

SIGN AREA (FT^2) X H (FT) ≤ SV (SELECTION VALUE)

POST SIZE	DIMENSIONS			SECTION MODULUS IN^3	ONE POST S v	TWO POST S v	THREE POST S v	NUMBER PERMITTED IN 8′ PATH
LBS/FT.	A	*B	GAUGE					
1.88	1-3/4″	.083	14	0.230	46	92	138	TWO
2.42	2″	.083	12	0.380	77	154	231	TWO
3.35	2-1/2″	.105	12	0.642	130	260	390	ONE

DESIGN CRITERIA:

WIND SPEED = 70 MPH (10 -YEAR MEAN RECURRENCE INTERVAL)
WIND PRESSURE = 19 PSF
STEEL MINIMUM YIELD = 55,000 PSI
ALLOWABLE STRESS = (1.4) 0.60 FY

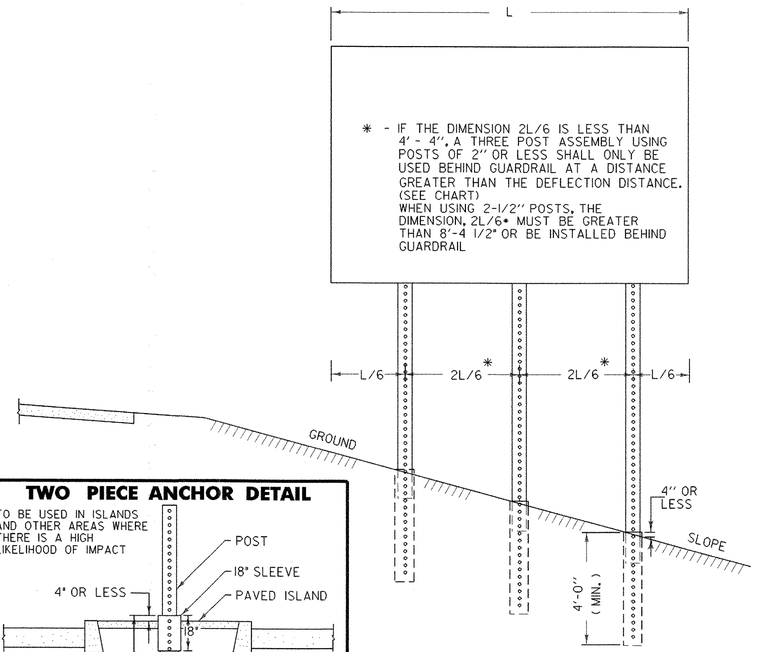

MULTI-POST INSTALLATIONS

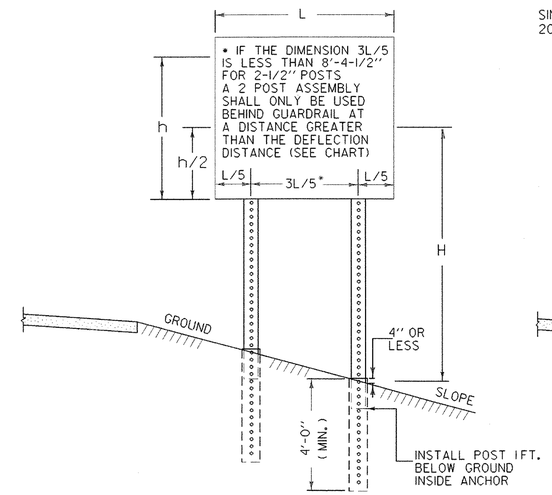

POST SPACING DETAILS

GENERAL NOTES

CONSTRUCTION METHODS - POSTS MAY BE DRIVEN OR SET IN A DUG HOLE AND BACKFILLED. IF DRIVEN, A DRIVING CAP SHALL BE USED. THE DUG HOLE INSTALLATION SHALL BE USED IN AREAS OF POOR SOIL CONDITIONS OR AS DIRECTED BY THE RESIDENT ENGINEER. BACKFILL SHALL BE COMPACTED AS DIRECTED BY THE RESIDENT ENGINEER.

SIGN CLEARANCES - HORIZONTAL AND VERTICAL SIGN CLEARANCES SHALL BE SHOWN ON THE PLANS OR THE APPROPRIATE STD. SHEETS.

SINGLE POST INSTALLATIONS SHALL BE LIMITED TO A SIGN AREA OF 20 SQ. FT. OR LESS

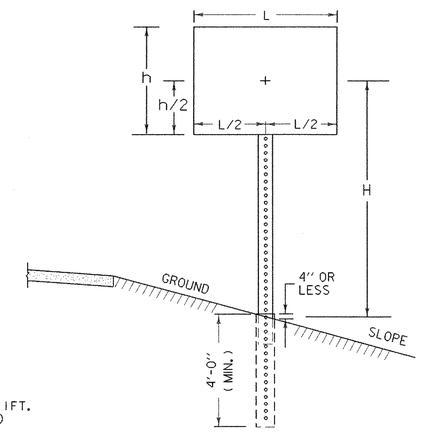

NOTE

WHEN USING SQUARE STEEL POSTS ON STEEP SLOPES (1 ON 2 OR STEEPER) ADD ONE FOOT EMBEDMENT FOR GREATER STABILITY.

TWO PIECE ANCHOR DETAIL

TO BE USED IN ISLANDS AND OTHER AREAS WHERE THERE IS A HIGH LIKELIHOOD OF IMPACT

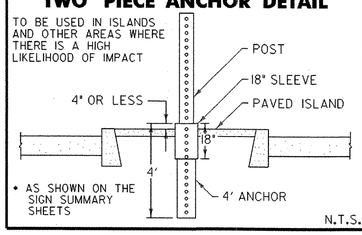

* AS SHOWN ON THE SIGN SUMMARY SHEETS

N.T.S.

TOP VIEW OF ANCHOR, POST AND BOLT

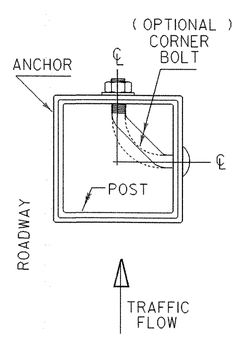

OPTIONAL CORNER BOLT DETAILS

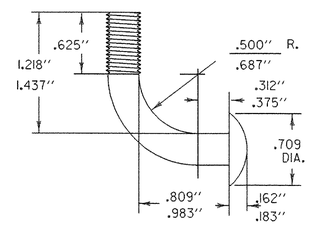

FOR 1-3/4″ TO 2-1/2″ SQ. TUBE BOLT SIZE VARIES WITH POST SIZE

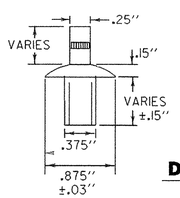

THIS DRIVE RIVET MAY BE SUBSTITUTED FOR EITHER OF THE CORNER BOLTS SHOWN ABOVE OR TO THE RIGHT.

DRIVE RIVET

DOUBLE DIMENSIONS REFER TO TWO ALTERNATE BOLT SIZES.

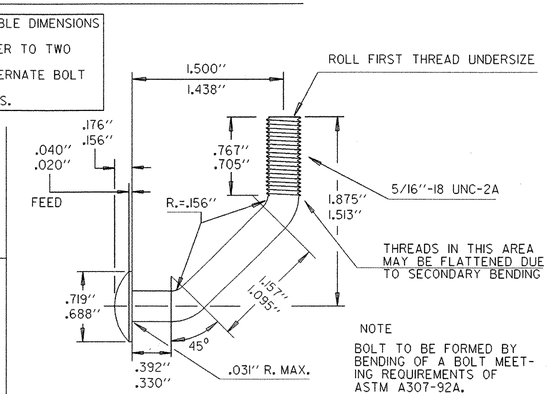

NOTE

BOLT TO BE FORMED BY BENDING OF A BOLT MEETING REQUIREMENTS OF ASTM A307-92A.

* DIMENSIONS VARY AS NEEDED FOR POST SIZE USED

CONNECTION DETAIL

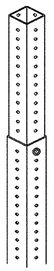

POST IS TO BE INSERTED INTO ANCHOR ONE FOOT BELOW GROUND LEVEL. ANCHOR IS TO BE 4′-0″ MINIMUM LENGTH WITH NO MORE THAN 4″ ABOVE GROUND. ANCHOR IS ONE SIZE (1/4″) GREATER THAN THE POST AND ALL ANCHORS ARE TO BE 12 GAGE, EXCEPT ANCHORS FOR 2-1/2″ POSTS ARE TO BE 3″ AND 7 GAGE. CONNECTION IS TO BE MADE USING THE BOLT PROVIDED WITH THE SIGN SYSTEM (SEE DETAILS LEFT). AT THE TOP HOLE IN THE ANCHOR (APPROXIMATELY 3-1/2″ ABOVE GROUND). THREE INCH ANCHORS WHICH DO NOT HAVE HOLES ON 1″ CENTERS WILL REQUIRE DRILLING OF 7/16″ HOLES FOR CONNECTIONS.

(SEE DETAIL LEFT FOR BOLT PLACEMENT)

OTHER STDS. REQUIRED E-120, E-160

REVISIONS AND CORRECTIONS

APR. 27, 1994 - ORIGINAL APPROVAL DATE
JUL. 21, 1994 - REVISED POST GAUGES
AUG. 18, 1995 - ADDED TWO PIECE ANCHOR DETAIL
MAR. 26, 1996 - REVISED POST SELECTION CHART
MAY 20, 1999 - REPLACE LOST ORIGINAL
JUN. 08, 2009 - POST SELECTION REVISIONS

APPROVED

Kevin S. Marshia
HIGHWAY, SAFETY & DESIGN ENGINEER

Richard Tetreault
DIRECTOR OF PROGRAM DEVELOPMENT

Mark D. Richter
FEDERAL HIGHWAY ADMINISTRATION

SQUARE STEEL SIGN POST

/traf/english/std/el64.dgn

VERMONT AGENCY OF TRANSPORTATION

STANDARD
E-164

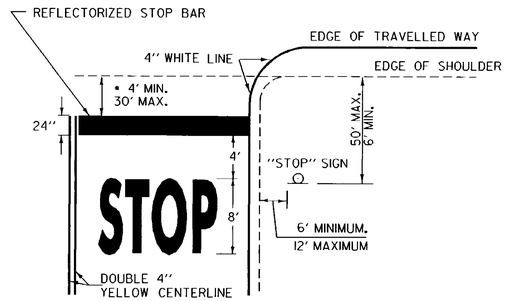

• THE "DESIRED STOPPING POINT" IS THE LOCATION BASED ON SITE CONDITIONS THAT BEST ALLOWS THE STOPPED VEHICLE TO VIEW THE APPROACHING TRAFFIC.

STOP BAR LAYOUT

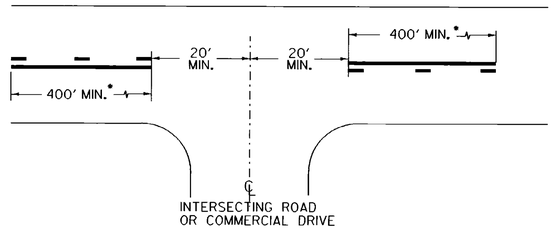

• THE SOLID LINE SHALL BE PAIRED WITH EITHER A SOLID OR DASHED LINE DEPENDING ON SIGHT DISTANCE AVAILABILITY IN THE OPPOSING DIRECTION. ADJUSTMENTS TO THE 40 FOOT CENTERLINE OPENING MAY BE MADE TO ACCOMMODATE SKEWED INTERSECTIONS.

CENTERLINE BREAKES:

A. AT ALL STATE HIGHWAYS AND TOWN HIGHWAYS, INCLUDING CLASS 4 TH'S. THAT HAVE STOP AND LEGAL LOAD LIMIT SIGNS INSTALLED

B. COMMERCIAL DRIVES:
1. WHERE A SEPERATE TURN LANE EXISTS ON THE MAIN LINE (LT. OR RT.)
2. SIGNIFICANT TRAFFIC VOLUMES EXISTS.
3. IF MOTORISTS NEED ASSISTANCE TO DEFINE ENTRANCE POINTS.

CENTERLINE LAYOUT

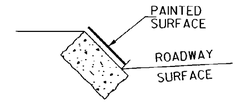

GRANITE SLOPE EDGING

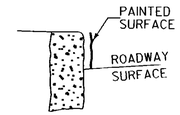

VERTICAL GRANITE CURB

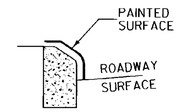

TYPE A (CONCRETE)

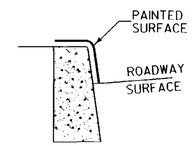

TYPE B (CONCRETE)

PAINTED CURB

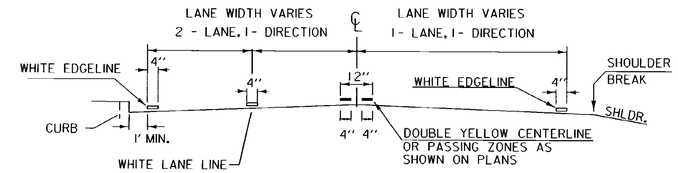

PAVEMENT MARKING PLACEMENT DETAIL

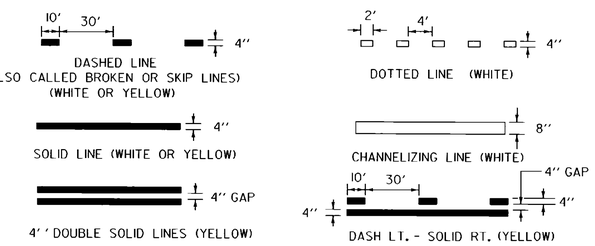

PAVEMENT MARKING LINE DETAILS

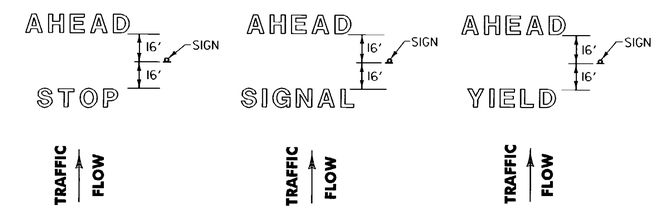

LETTER IN WORD MARKING SPACING DETAIL

NOTE: SINGLE WORDS CENTERED ON SIGN ie: SCHOOL OR YIELD

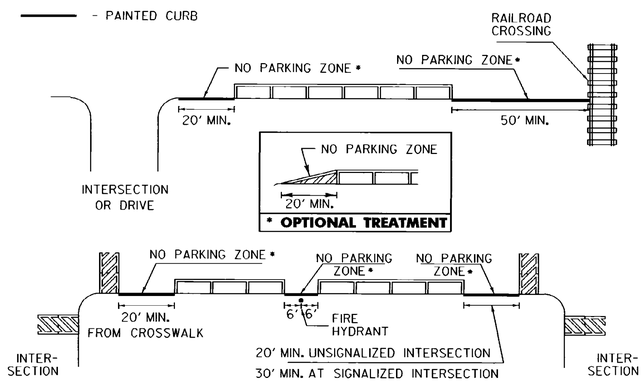

NO PARKING LAYOUT DETAILS

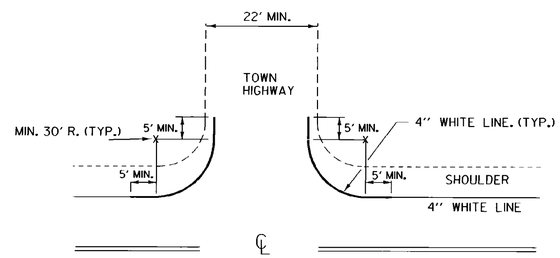

EDGELINES SHALL BE APPLIED TO ALL STATE HIGHWAYS AND SHOULD BE MAINTAINED AT A CONSTANT DISTANCE FROM THE CENTERLINE UNLESS PAVEMENT WIDTH INCREASES TO ALLOW WIDER LANES.

APPLY EDGELINE AS DETAILED ON ALL PAVED CLASS 1 & CLASS 2 TOWN HIGHWAYS AND ANY CLASS 3 TOWN HIGHWAY 22 FEET OR MORE IN WIDTH.

IF MIN. 30 FOOT RADIUS CANNOT BE OBTAINED, OR THE TOWN HIGHWAY IS NOT PAVED, BREAK THE EDGELINE USING AN 80 FOOT GAP AT INTERSECTION.

EDGELINE LAYOUTS

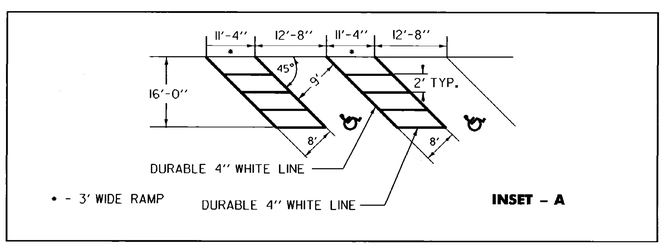

NOTE:

SEE STANDARD SHEET E-191 FOR HANDICAP SYMBOL POSITIONING AND DETAIL.

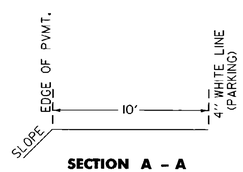

SECTION A - A

TRUCK PARKING DETAIL

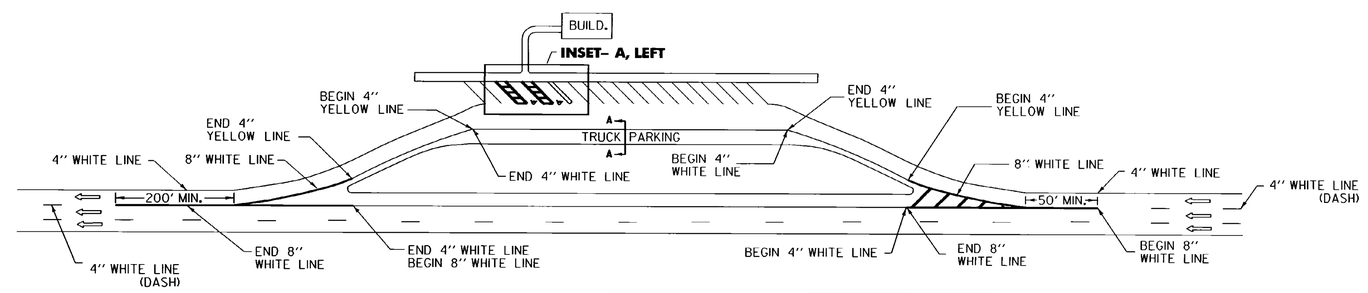

REST AREA PARKING DETAILS

THIS SHEET IS NOT TO SCALE

OTHER STDS. E - 191, E - 192 REQUIRED

REVISIONS AND CORRECTIONS

AUG. 18, 1995 - DATE OF ORIGINAL ISSUE

APPROVED FOR THIS PROJECT AND/OR DESIGN IMPLEMENTATION. FHWA FINAL APPROVAL PENDING.

APPROVED

DIRECTOR OF ENGINEERING

TRAFFIC AND SAFETY ENGINEER

PAVEMENT MARKING DETAILS

/traf/std/stdel93.dgn/stdel93.i

VERMONT AGENCY OF TRANSPORTATION

STANDARD

E-193

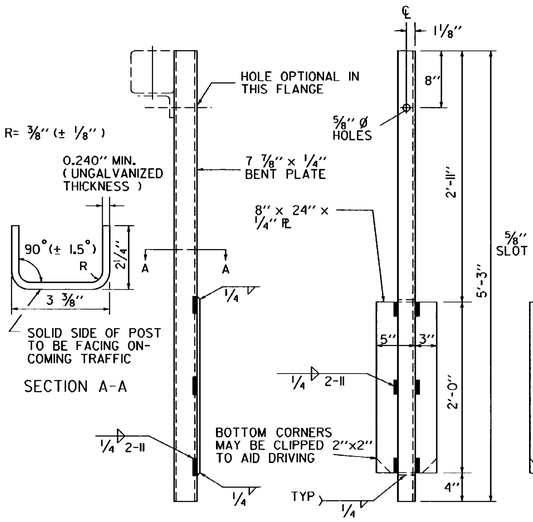

ALTERNATE POST (BENT PLATE)
(STD. HM-TF-13 P-49-76)

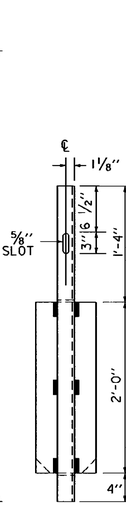

END POST DETAIL

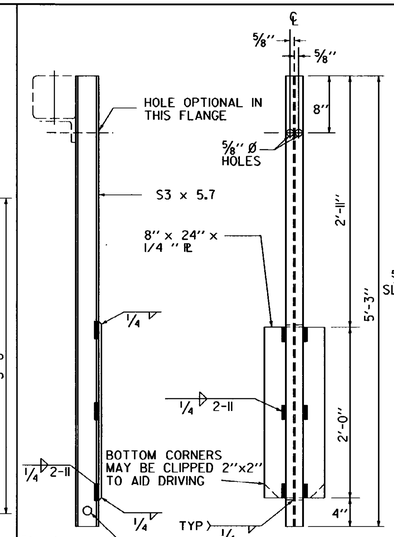

S3 X 5.7 POST
(STD. HM-TF-13 P-4-76)

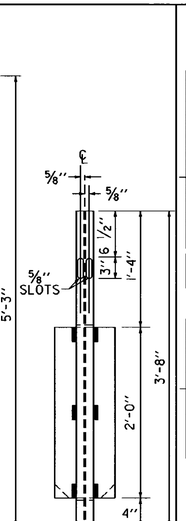

END POST DETAIL

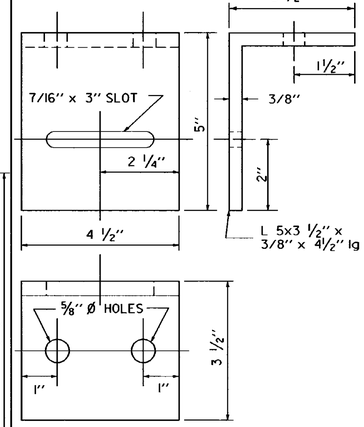

RAIL SUPPORT ANGLE
(STD. HM-TF-13 P-5-76)

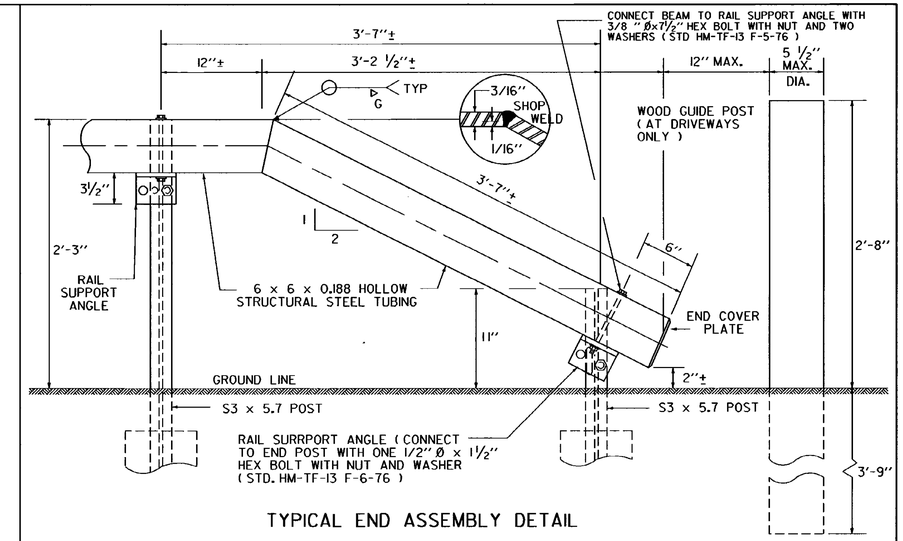

TYPICAL END ASSEMBLY DETAIL

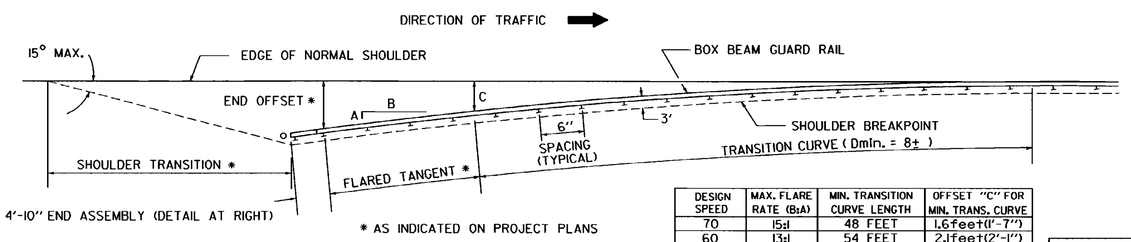

* AS INDICATED ON PROJECT PLANS

DESIGN SPEED	MAX. FLARE RATE (B:A)	MIN. TRANSITION CURVE LENGTH	OFFSET "C" FOR MIN. TRANS. CURVE
70	15:1	48 FEET	1.6feet(1'-7")
60	13:1	54 FEET	2.1feet(2'-1")
50	11:1	66 FEET	3.0feet(3'-0")
40	9:1	78 FEET	4.3feet(4'-4")

PLAN OF FLARED APPROACH

GENERAL NOTES

1. THE DESIRED APPROACH END OFFSET SHOULD BE AT LEAST 8' FROM THE EDGE OF NORMAL SHOULDER WHERE SPACE PERMITS; IN SPECIAL CASES, THE END OFFSET MAY BE REDUCED. IN NO CASE, HOWEVER, WILL THE END OFFSET BE LESS THAN 4'.
2. POST SPACING WILL BE 6'-0" C-C, EXCEPT IN THE VICINITY OF THE JUNCTION OF BOX BEAM GUARD RIAL AND BRIDGE RAILING, AND AT OTHER LOCATONS INDICATED ON THE PLANS. AT BRIDGE APPROACHES, THE 50' SECTION ADJACENT TO THE BRIDGE RAILING WILL HAVE A POST SPACING OF 4'-0" C-C.
3. FOR MATERIAL REQUIREMENTS AND CONSTRUCTION DETAILS SEE SPECIFICATIONS FOR BOX BEAM GUARD RAIL.
4. RAIL ALIGNMENT TO BE STRAIGHT AT SPLICES. NO LATERAL BENDS PERMITTED WITHIN THE SPLICE. THIS DOES NOT PRECLUDE THE SHOP FABRICATION OF BENT SPLICES.
5. THE LINE OF BOX BEAM GUARD RAIL WHEN COMPLETED SHALL PRESENT A SMOOTH AND PLEASING GRADE LINE IN BOTH HORIZONTAL AND VERTICAL PLANES.
6. ALL POSTS IN A GIVEN RUN TO BE OF THE SAME TYPE.

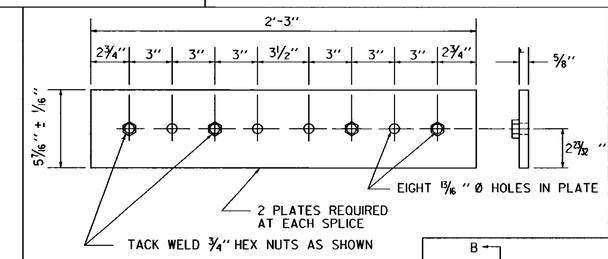

SPLICE PLATE DETAIL
(STD. HM-TF-13 RE-11-73)

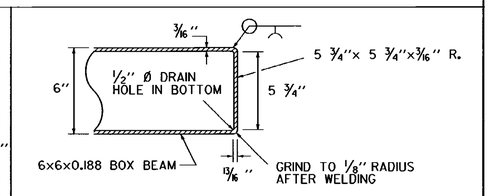

END COVER PLATE DETAIL

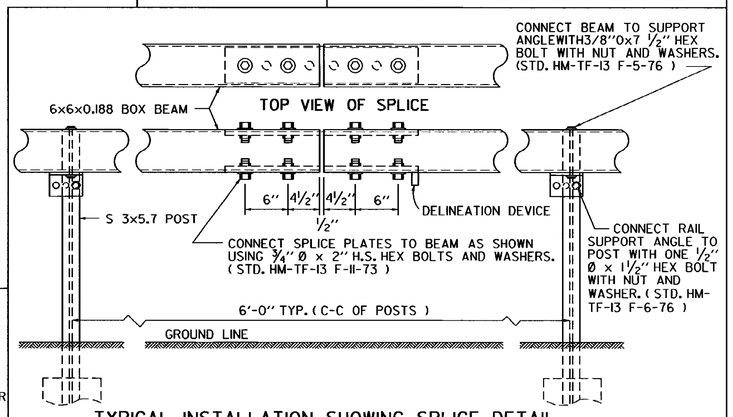

TYPICAL INSTALLATION SHOWING SPLICE DETAIL

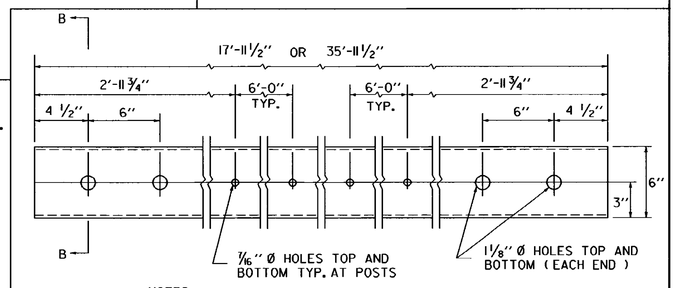

NOTES:

1. RAIL SECTIONS FOR TANGENT RUNS WILL BE EITHER 17'-11 1/2" OR 35'-11 1/2" IN LENGTH.
2. ON CURVES, CHORD LENGTHS WILL BE NO LESS THAN 12 FEET.
3. FOR CURVES GREATER THAN 8°, RAIL SECTIONS SHALL BE SHOPFORMED TO THE REQUIRED CURVATURE. PAYMENT OF SUCH SHOP WORK WILL BE CONSIDERED TO BE SUBSIDIARY TO BOX BEAM GUARD RAIL.
4. WELD OR GALVANIZING PROTRUSIONS WILL NOT BE PERMITTED ON TOP OR BOTTOM INSIDE WALLS IN SPLICE AREA.

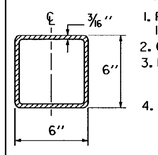

SECTION B-B

6x6x0.188 BOX BEAM RAIL ELEMENT
(STD. HM-TF-13 RE-10-76)

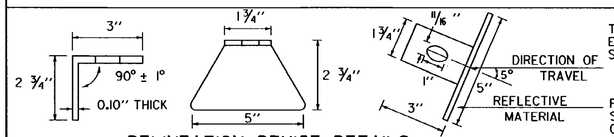

DELINEATION DEVICE DETAILS

THIS REFLECTORIZED ALUMINUM DELINEATION DEVICE IS TO BE ERECTED EVERY 36 FEET, AT SPLICES. DELINEATOR SHALL MEET SPECIFICAITON REQUIRMENTS FOR ASTM B209 ALLOY 5052-H32.

REFLECTIVE MATERIAL SHALL MEET THE REQUIREMENTS OF SUBSECTION 750.09 AND SHALL BE OF ENCAPSULATED LENS SILVER OR AMBER. AMBER IS TO BE INSTALLED ON THE LEFT OR MEDIAN SIDE OF INTERSTATE ROADWAYS OR RAMPS.

REVISIONS AND CORRECTIONS

OCT. 17, 1979- ORIGINAL APPROVAL DATE
JULY 23, 1980- CHANGED DIAMETER OF GUIDE POST
DEC. 16, 1980- INCREASED SHOULDER WIDENING FOR GUARD RAIL
JUNE 17, 1984- DELINEATOR DEVICE ADDED
DEC. 21, 1984- HEIGHT OF RAIL LOWERED FROM 2'-6" TO 2'-3"
OCT. 31, 1985- REVISED TO CONFORM TO 1986 SPECIFICATIONS
JUNE 1, 1994 - REISSUED, WITHOUT CHANGE, UNDER NEW SIGNATURES.

APPROVED

APPROVED FOR THIS PROJECT AND/OR DESIGN IMPLEMENTATION. FHWA FINAL APPROVAL PENDING.

Gordon B. MacArthur, P.E.
DIRECTOR OF ENGINEERING

Robert M. Murphy, P.E.
DESIGN ENGINEER

BOX BEAM GUARD RAIL

VERMONT AGENCY OF TRANSPORTATION

STANDARD
G-1b

"W" BEAM GUARDRAIL WITH STEEL POSTS

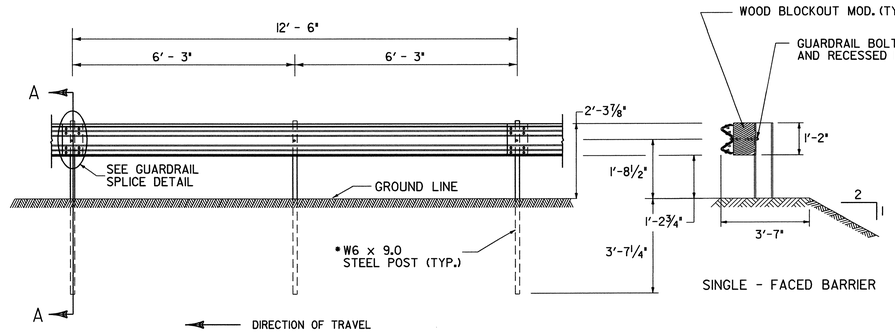

ELEVATION FROM ℄ OF ROAD

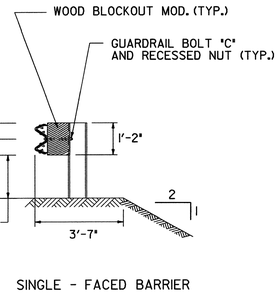

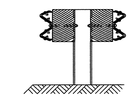

DOUBLE - FACED BARRIER

PLAN

SECTION A -A

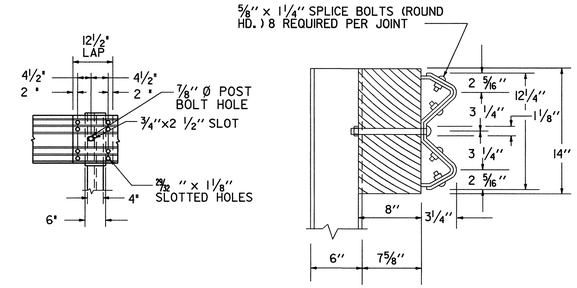

ELEVATION

SECTION

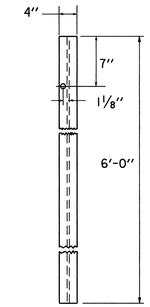

FRONT FACE STEEL POST

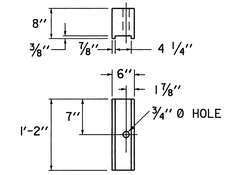

POST FACE
MODIFIED WOOD BLOCKOUT- ROUTED
6" X 8" X 1'-2"
FOR USE W/ STEEL POSTS ONLY

NOTES:
1. BLOCKS SHALL BE MADE OF TIMBER WITH A STRESS GRADE OF 1200 PSI OR MORE. TESTING SHALL BE IN ACCORDANCE WITH WEST COAST LUMBER INSPECTION BUREAU, SOUTHERN PINE INSPECTION BUREAU OR OTHER APPRPRIATE ASSOCIATION. TIMBER FOR BLOCKS SHALL BE ROUGH SAWN (UNPLANED) WITH DIMENSIONS INDICATED. THE SIZE TOLERANCE OF ROUGH SAWN BLOCKS IN THE DIRECTION OF THE BOLT HOLES SHALL BE NOT MORE THAN +/- ¼".
2. SUPPLY WOOD BLOCKS PER AASHTO M 168.
3. TREAT WITH PRESERVATIVE PER AASHTO M 133.
4. BLOCKOUTS MAY ALSO BE MADE OF APPROVED ALTERNATIVE MATERIAL.

"W" BEAM GUARDRAIL WITH WOOD POSTS

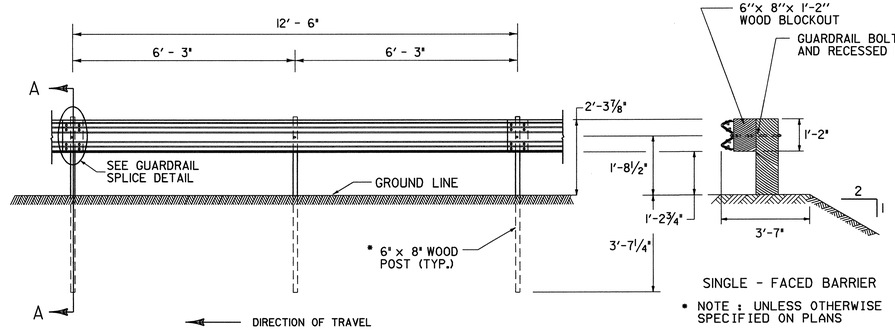

ELEVATION FROM ℄ OF ROAD

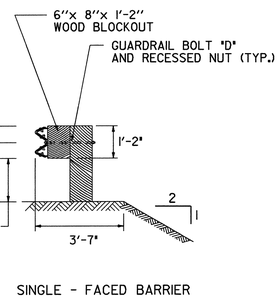

• NOTE : UNLESS OTHERWISE SPECIFIED ON PLANS

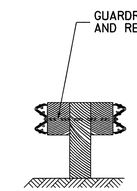

DOUBLE - FACED BARRIER

PLAN

SECTION A -A

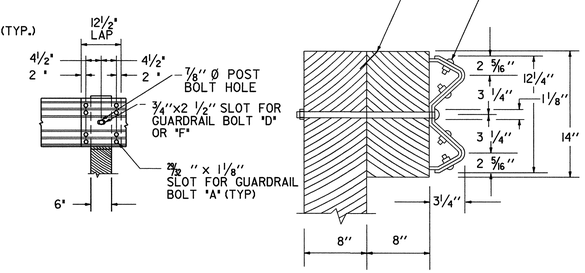

ELEVATION

SECTION

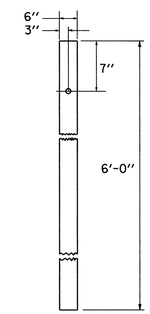

FRONT FACE WOOD POST

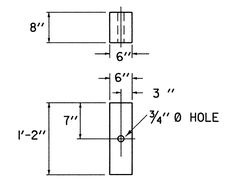

POST FACE
WOOD BLOCKOUT
6" X 8" X 1'-2"

NOTES:
1. BLOCKS SHALL BE MADE OF TIMBER WITH A STRESS GRADE OF 1200 PSI OR MORE. TESTING SHALL BE IN ACCORDANCE WITH WEST COAST LUMBER INSPECTION BUREAU, SOUTHERN PINE INSPECTION BUREAU OR OTHER APPRPRIATE ASSOCIATION. TIMBER FOR BLOCKS SHALL BE ROUGH SAWN (UNPLANED) WITH DIMENSIONS INDICATED. THE SIZE TOLERANCE OF ROUGH SAWN BLOCKS IN THE DIRECTION OF THE BOLT HOLES SHALL BE NOT MORE THAN +/- ¼".
2. SUPPLY WOOD BLOCKS PER AASHTO M 168.
3. TREAT WITH PRESERVATIVE PER AASHTO M 133.
4. BLOCKOUTS MAY ALSO BE MADE OF APPROVED ALTERNATIVE MATERIAL.

GUARDRAIL DELINEATOR

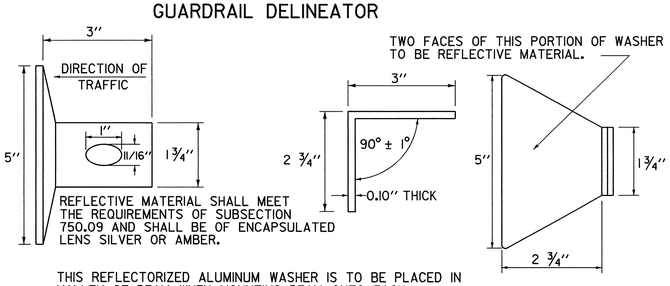

REFLECTIVE MATERIAL SHALL MEET THE REQUIREMENTS OF SUBSECTION 750.09 AND SHALL BE OF ENCAPSULATED LENS SILVER OR AMBER.

THIS REFLECTORIZED ALUMINUM WASHER IS TO BE PLACED IN VALLEY OF BEAM WHEN MOUNTING BEAM ONTO EACH FIFTH POST. WASHER SHALL MEET SPECIFICATION REQUIREMENTS FOR A.S.T.M. B-209 ALLOY 5052-H32

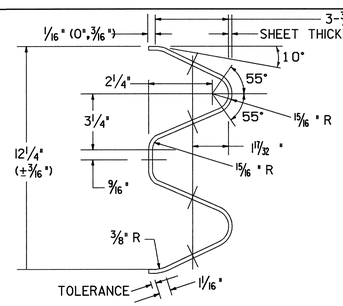

ARTBA RE-3[2@6'-3"=12'-6" CLASS A, TYPE 1]-73

TYPICAL GUARDRAIL SECTION

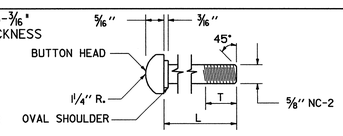

GUARDRAIL BOLT

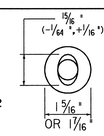

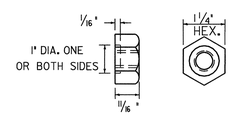

RECESSED NUT FOR GUARDRAIL BOLT

GUARDRAIL BOLTS				FASTENER USED IN	
BOLT DES.	ARTBA REF. NO.	L	T (MIN.)	STEEL POSTS	WOOD POSTS
"A"	F-3[1¼]-76	1¼"	1"	X	X
"C"	F-3[9½]-76	9½"	1¾"	X	
"D"	F-3[18]-76	18"	2½"		X
"F"	F-3[25]-76	25"	2"		X

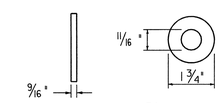

WASHER FOR ⅝" BOLTS
ARTBA F-13-73
NOTE: WASHER IS USED UNDER RECESSED NUT WHERE GUARDRAIL BOLT IS USED WITH WOOD POSTS.

GENERAL NOTES:

1. GUARDRAIL SHALL MEET THE REQUIREMENTS OF AASHTO M 180, CLASS A, TYPE 1, UNLESS OTHERWISE DESIGNATED
2. GUARDRAIL SHALL BE SINGLE FACED UNLESS OTHERWISE DESIGNATED
3. GUARDRAIL SECTIONS SHALL BE LAPPED IN THE DIRECTION OF TRAFFIC FLOW FOR THE LANE NEAREST THE GUARDRAIL.
4. FOR DESCRIPTION AND SPECIFICATION OF PARTS IDENTIFIED BY (ARTBA ...) AND OTHER DETAILS OF POSTS, POST ACCESSORIES, FASTENERS & RAIL ELEMENTS, SEE AASHTO-AGC-ARTBA JOINT TASK FORCE NO. 13, TITLED "A GUIDE TO STANDARDIZED HIGHWAY BARRIER HARDWARE", LATEST EDITION.
5. STANDARD STEEL BEAM TO BE ⅛" AND THE HEAVY DUTY TO BE 3/64" THICK.

OTHER STANDARD REQUIRED G-1d

REVISIONS AND CORRECTIONS
JUNE 1, 1994 - REISSUED, WITHOUT CHANGE, UNDER NEW SIGNATURES.
JAN.3,2000 - UPDATED TO REFLECT METRIC STD. CHANGES

APPROVED

DIRECTOR OF PROJECT DEVELOPMENT

ROADWAY AND TRAFFIC DESIGN ENGINEER

STEEL BEAM GUARDRAIL WITH STEEL POSTS
STEEL BEAM GUARDRAIL WITH WOOD POSTS

VERMONT AGENCY OF TRANSPORTATION

STANDARD
G-1

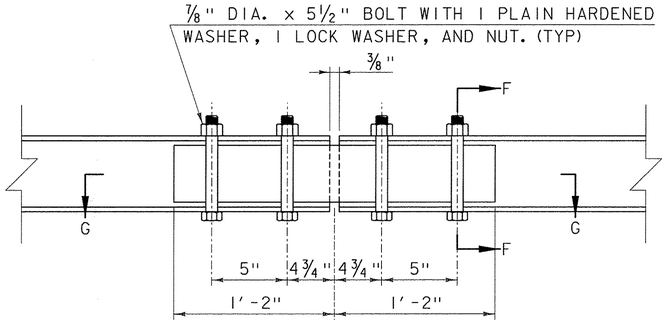

TOP RAIL FIXED SPLICE DETAIL

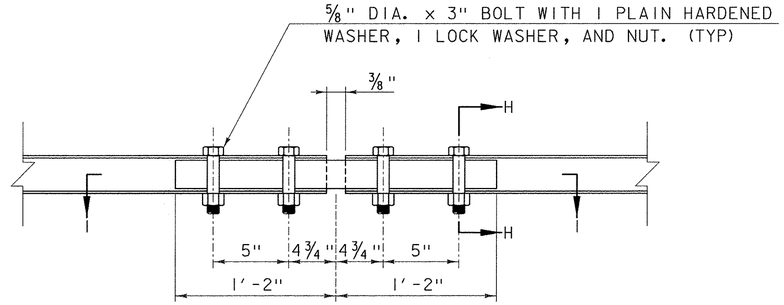

BOTTOM RAIL FIXED SPLICE DETAIL

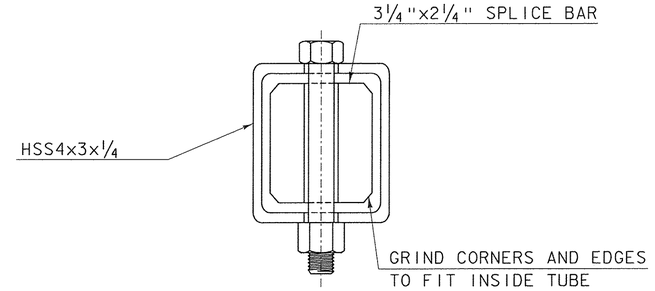

SECTION F-F

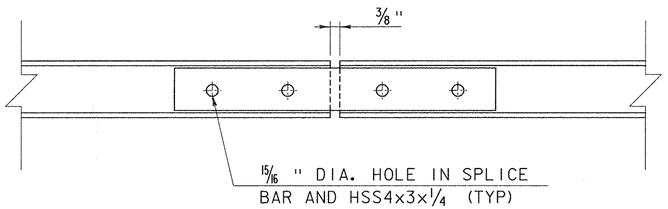

SECTION G-G

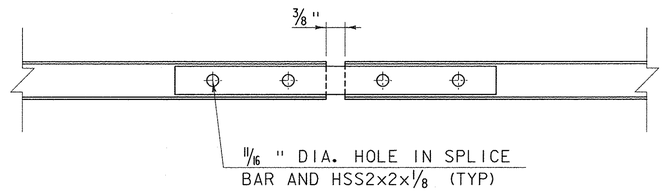

SECTION I-I

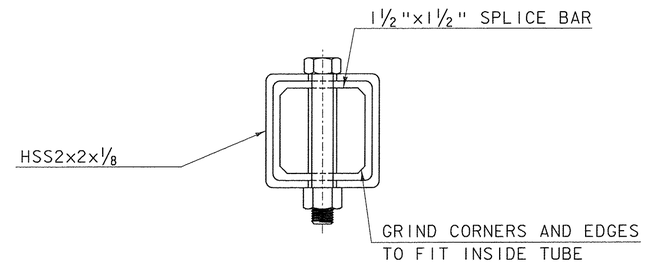

SECTION H-H

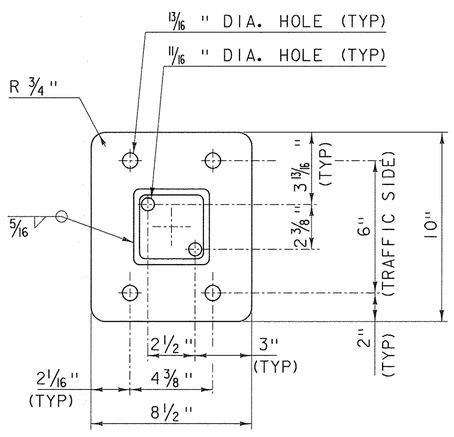

BASE PLATE

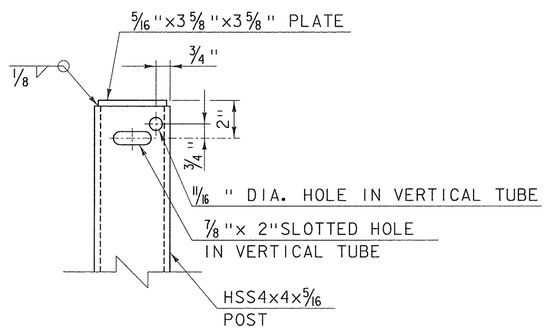

VERTICAL TUBE DETAIL
(FRONT VIEW)

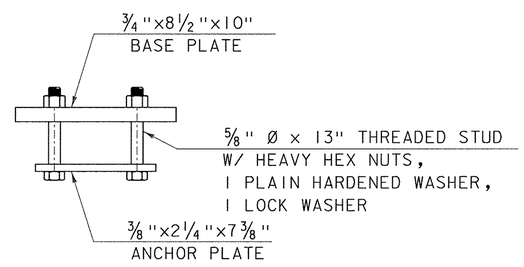

RAIL POST ANCHORAGE

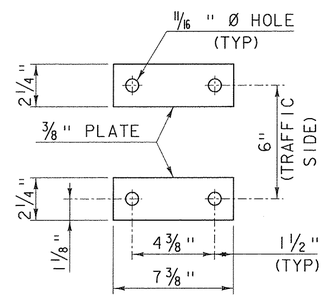

ANCHOR PLATES

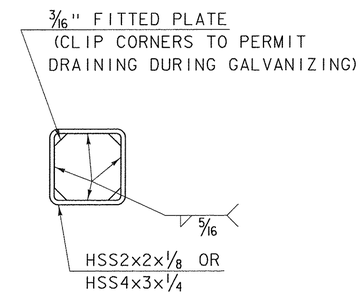

END OF RAIL DETAIL

OTHER STDS. REQUIRED: **G-1**

REVISIONS AND CORRECTIONS

AUGUST 22, 2012 - ORIGINAL APPROVAL

APPROVED

Wm. Michael Hedges
STRUCTURES ENGINEER

Richard Fetterault
DIRECTOR OF PROGRAM DEVELOPMENT

Mark D. Richter
FEDERAL HIGHWAY ADMINISTRATION

BRIDGE RAILING, GALVANIZED STEEL TUBING / CONCRETE COMBINATION

VERMONT AGENCY OF TRANSPORTATION

STANDARD
S-352B

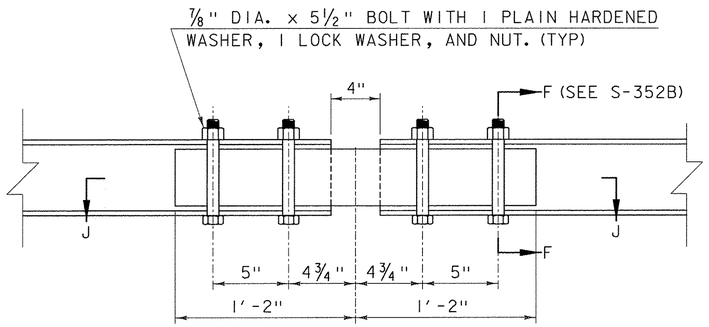

TOP RAIL EXPANSION SPLICE DETAIL

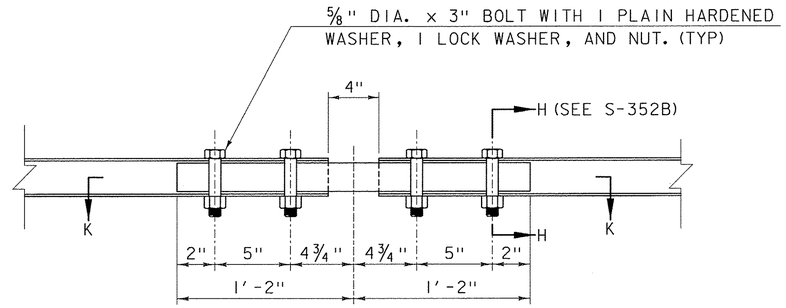

BOTTOM RAIL EXPANSION SPLICE DETAIL

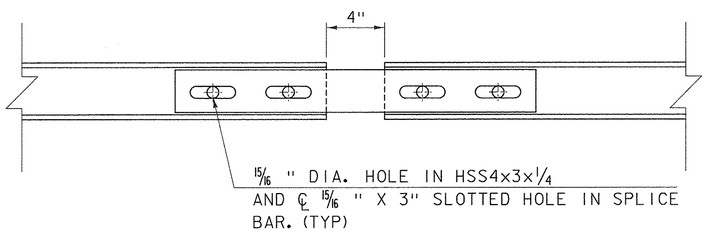

SECTION J-J

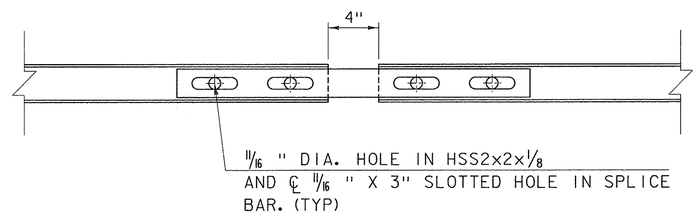

SECTION K-K

OTHER STDS. REQUIRED: G-1

REVISIONS AND CORRECTIONS

AUGUST 22, 2012 - ORIGINAL APPROVAL

APPROVED

STRUCTURES ENGINEER

DIRECTOR OF PROGRAM DEVELOPMENT

FEDERAL HIGHWAY ADMINISTRATION

BRIDGE RAILING, GALVANIZED STEEL TUBING / CONCRETE COMBINATION

VERMONT AGENCY OF TRANSPORTATION

STANDARD

S-352C