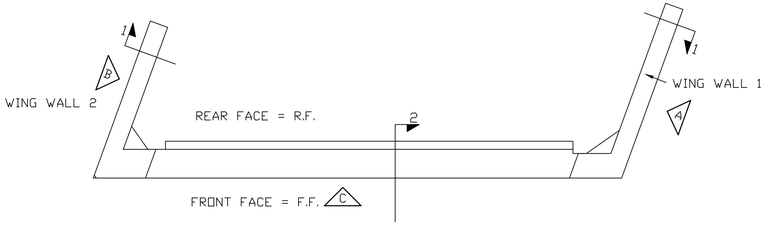

ABUTMENT PLAN

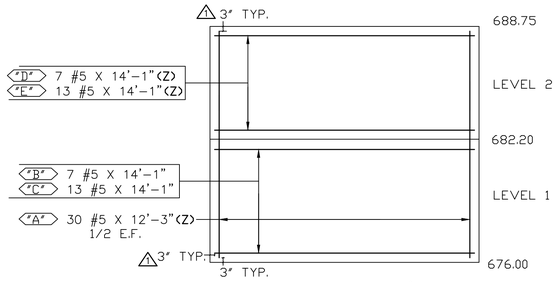

ELEVATION A

WINGWALL 1

1 ALL BAR LENGTHS REVISED PER NEW CLEARANCE DIMENSION

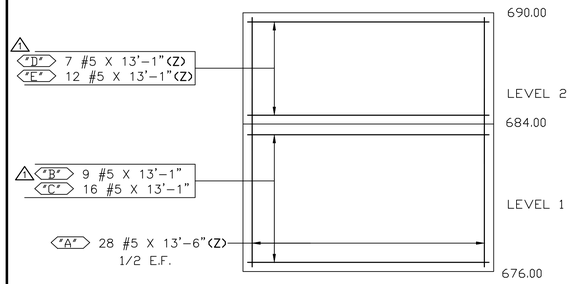

ELEVATION B

WINGWALL 2

1 ALL BAR LENGTHS REVISED PER NEW CLEARANCE DIMENSION

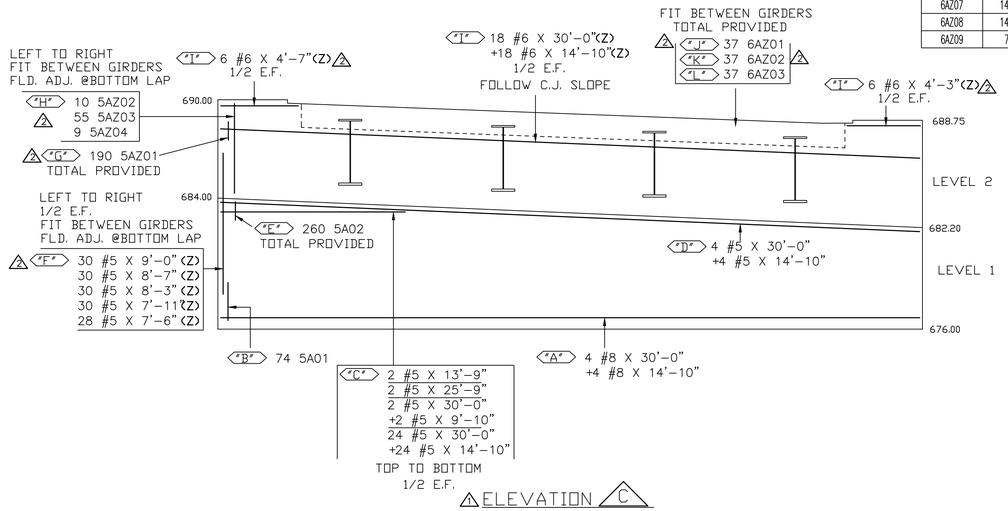

1 ELEVATION C

ABUTMENT

FLD. ADJ. AS REQ.

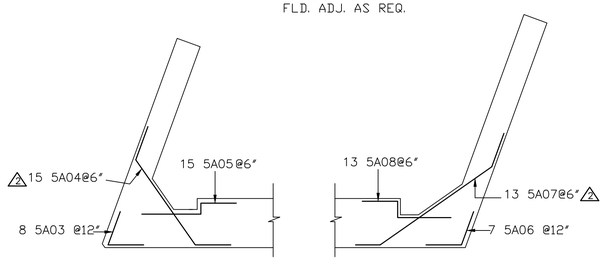

1 BELOW THE CONSTRUCTION JOINT

LEVEL 1

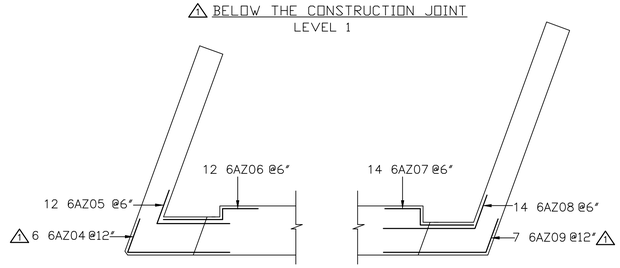

ABOVE THE CONSTRUCTION JOINT

LEVEL 2

CORNER BARS

FLD. ADJ. AS REQ.

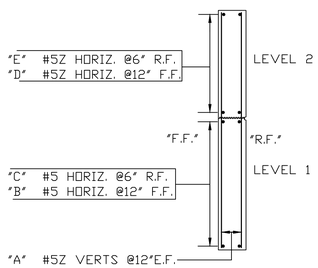

SECT. 1

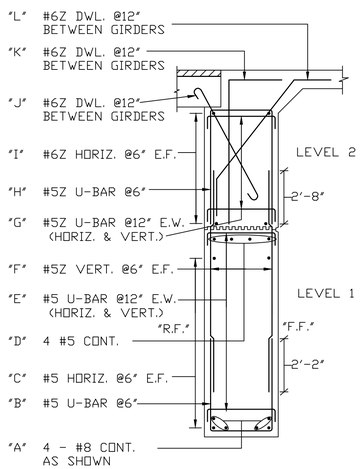

SECT. 2

2 Release Number: 005

BAR LIST

Bar Mark	Qty	Size	Total Length	Type	'A'	'B'	'C'	'D'	'E'	'F'	'G'	'H'	'J'	'K'	'O'	'R'
5A01	74	#5	10'-1"	17		3'-9"	2'-7"	3'-9"								
5A02	260	#5	4'-3"	17		0'-10"	2'-7"	0'-10"								
5A03	8	#5	4'-4"	36		2'-2"	2'-2"					2'-0 ¼"		0'-8 ¾"		
5A04	15	#5	9'-1 ½"	3			1'-5 ¾"	6'-2"	1'-5 ¾"			1'-2 ¾"		0'-10 ¼"	7'-10 ½"	
5A05	15	#5	6'-5"	20		2'-2"	0'-8"	3'-7"								
5A06	7	#5	4'-3 ¼"	3		2'-2"	2'-1 ¾"					2'-0 ¼"		0'-8 ¾"	2'-10 ¾"	
5A07	13	#5	10'-11 ½"	3			1'-5 ¾"	8'-0"	1'-5 ¾"			0'-10 ¼"		1'-2 ¾"	10'-5 ½"	
5A08	13	#5	6'-5"	20		2'-2"	1'-0"	3'-3"								

2 Release Number: 006

BAR LIST

Bar Mark	Qty	Size	Total Length	Type	'A'	'B'	'C'	'D'	'E'	'F'	'G'	'H'	'J'	'K'	'O'	'R'
5AZ01	190	#5	4'-3"	17		0'-10"	2'-7"	0'-10"								
5AZ02	10	#5	13'-5"	17		5'-5"	2'-7"	5'-5"								
5AZ03	55	#5	10'-7"	17		4'-0"	2'-7"	4'-0"								
5AZ04	9	#5	14'-1"	17		5'-9"	2'-7"	5'-9"								
6AZ01	37	#6	6'-4"	1	0'-8"	5'-0"					0'-8"		0'-6"			
6AZ02	37	#6	7'-2"	17		2'-2"	5'-0"									
6AZ03	37	#6	8'-0"	3			1'-6"	5'-0"	1'-6"			1'-0 ¾"		1'-0 ¾"	7'-1 ½"	
6AZ04	6	#6	8'-5"	36		6'-3"	2'-2"					2'-0 ¼"		0'-8 ¾"		
6AZ05	12	#6	7'-2"	36		5'-0"	2'-2"					2'-0 ¼"		0'-8 ¾"		
6AZ06	12	#6	6'-5"	20		2'-2"	0'-8"	3'-7"								
6AZ07	14	#6	6'-5"	20		2'-2"	1'-0"	3'-3"								
6AZ08	14	#6	7'-8 ¾"	3		5'-7"	2'-1 ¾"					2'-0 ¼"		0'-8 ¾"	6'-3 ¾"	
6AZ09	7	#6	8'-4 ¾"	3		6'-3"	2'-1 ¾"					2'-0 ¼"		0'-8 ¾"	6'-11 ¾"	

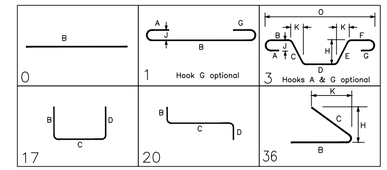

NOTE: BAR MARKS MAY CHANGE WHEN DRAWING IS REVISED

LAP = 2'-2" U.N.O.

-ELEVATIONS & DIMENSIONS SHOWN ON THIS DWG. ARE FOR REINF. DETAILING PURPOSES ONLY AND ARE NOT INTENDED FOR CONSTRUCTION.

-BLACK REINF. BARS - ASTM A615 GRADE 60

-DUAL COATED BAR - ASTMA1055 (Z BAR)

-DUAL COATED BAR DENOTED (Z)

FOR APPROVAL

6			
5			
4			
3	04/02/13	2	REV'D/ENG. COMM./APPROVAL
2	03/22/13	1	REV'D/ENG. COMM./APPROVAL
1	02/19/13	0	APPROVAL
	DATE	REV.#	SENT FOR

DIMENSION
DIMENSION FABRICATORS INC.
2000 7TH STEET
SCOTIA, N.Y. 12302
PH: (518) 374-1936
FAX (518) 374-4830
www.dimensionfabricators.com

STRUCTURE	VTAOT JAMAICA ER BRF 013-1(16)
LOCATION	JAMAICA, VT
ARCHITECT	
ENGINEER	
CUSTOMER	T. BUCK CONSTRUCTION
DRAWN BY WAYNE	DATE 02/19/13 — DFI # 8421
DRAWING COVERS ABUTMENT 1 REINF.	DRAWING # A

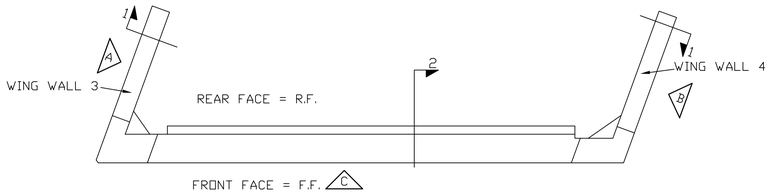

ABUTMENT PLAN

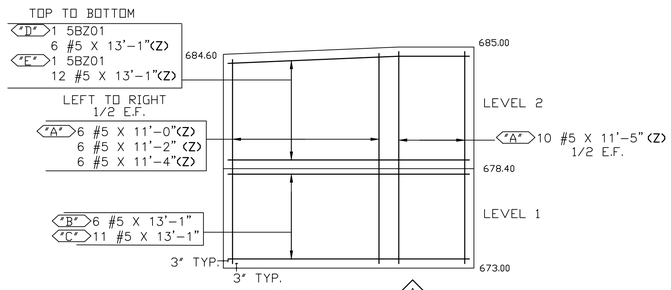

1 ELEVATION A
WINGWALL 3

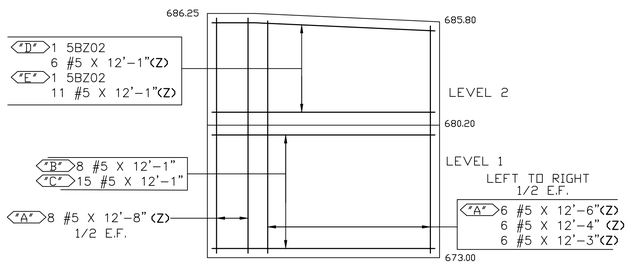

1 ELEVATION B
WINGWALL 4

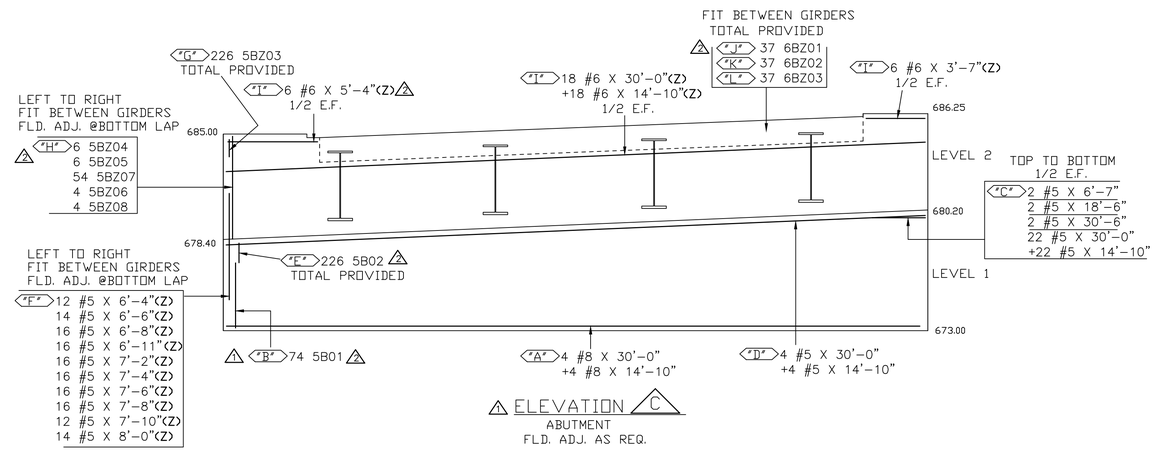

1 ELEVATION C
ABUTMENT
FLD. ADJ. AS REQ.

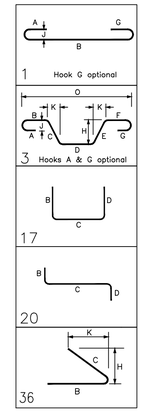

Release Number: 007																
BAR LIST																
Bar Mark	Qty	Size	Total Length	Type	'A'	'B'	'C'	'D'	'E'	'F'	'G'	'H'	'J'	'K'	'O'	'R'
5BZ01	2	#5	13'-2 3/4"	3		9'-4"	3'-10 3/4"					0'-2"		3'-10 3/4"	13'-2 3/4"	
Release Number: 009																
BAR LIST																
Bar Mark	Qty	Size	Total Length	Type	'A'	'B'	'C'	'D'	'E'	'F'	'G'	'H'	'J'	'K'	'O'	'R'
5BZ02	2	#5	12'-3"	3		9'-10"	2'-5"					0'-1 1/4"		2'-5"	12'-3"	
2 Release Number: 011																
BAR LIST																
Bar Mark	Qty	Size	Total Length	Type	'A'	'B'	'C'	'D'	'E'	'F'	'G'	'H'	'J'	'K'	'O'	'R'
5B01	74	#5	10'-1"	17		3'-9"	2'-7"	3'-9"								
5B02	226	#5	4'-3"	17		0'-10"	2'-7"	0'-10"								
5B03	6	#5	4'-4"	36		2'-2"	2'-2"					2'-0 1/4"		0'-8 3/4"		
5B04	11	#5	9'-1 1/2"	3			1'-5 3/4"	6'-2"	1'-5 3/4"			1'-2 3/4"		0'-10 1/4"	7'-10 1/2"	
5B05	14	#5	6'-4"	20		2'-2"	0'-8"	3'-6"								
5B06	14	#5	6'-8"	20		2'-2"	1'-0"	3'-6"								
5B07	14	#5	10'-11 1/2"	3			1'-5 3/4"	8'-0"	1'-5 3/4"			0'-10 1/4"		1'-2 3/4"	10'-5 1/2"	
5B08	7	#5	4'-3 3/4"	3		2'-2"	2'-1 3/4"					2'-0 1/4"		0'-8 3/4"	2'-10 3/4"	
2 Release Number: 012																
BAR LIST																
Bar Mark	Qty	Size	Total Length	Type	'A'	'B'	'C'	'D'	'E'	'F'	'G'	'H'	'J'	'K'	'O'	'R'
5BZ03	226	#5	4'-3"	17		0'-10"	2'-7"	0'-10"								
5BZ04	6	#5	14'-9"	17		6'-1"	2'-7"	6'-1"								
5BZ05	6	#5	14'-5"	17		5'-11"	2'-7"	5'-11"								
5BZ06	4	#5	13'-11"	17		5'-8"	2'-7"	5'-8"								
5BZ07	54	#5	10'-9"	17		4'-1"	2'-7"	4'-1"								
5BZ08	4	#5	13'-7"	17		5'-6"	2'-7"	5'-6"								
6BZ01	37	#6	6'-4"	1	0'-8"	5'-0"					0'-8"		0'-6"			
6BZ02	37	#6	7'-2"	17		2'-2"	5'-0"									
6BZ03	37	#6	8'-0"	3			1'-6"	5'-0"	1'-6"			1'-0 3/4"		1'-0 3/4"	7'-1 1/2"	
6BZ04	7	#6	8'-5"	36		6'-3"	2'-2"					2'-0 1/4"		0'-8 3/4"		
6BZ05	13	#6	7'-2"	36		5'-0"	2'-2"					2'-0 1/4"		0'-8 3/4"		
6BZ06	13	#6	6'-5"	20		2'-2"	0'-8"	3'-7"								
6BZ07	13	#6	6'-5"	20		2'-2"	1'-0"	3'-3"								
6BZ08	13	#6	7'-8 3/4"	3		5'-7"	2'-1 3/4"					2'-0 1/4"		0'-8 3/4"	6'-3 3/4"	
6BZ09	7	#6	8'-4 3/4"	3		6'-3"	2'-1 3/4"					2'-0 1/4"		0'-8 3/4"	6'-11 3/4"	

1 NOTE: BAR MARKS MAY CHANGE WHEN DRAWING IS REVISED

LAP = 2'-2" U.N.O.

-ELEVATIONS & DIMENSIONS SHOWN ON THIS DWG. ARE FOR REINF. DETAILING PURPOSES ONLY AND ARE NOT INTENDED FOR CONSTRUCTION.

-BLACK REINF. BARS - ASTM A615 GRADE 60

-DUAL COATED BAR - ASTMA1055 (Z BAR)

-DUAL COATED BAR DENOTED (Z)

FOR APPROVAL

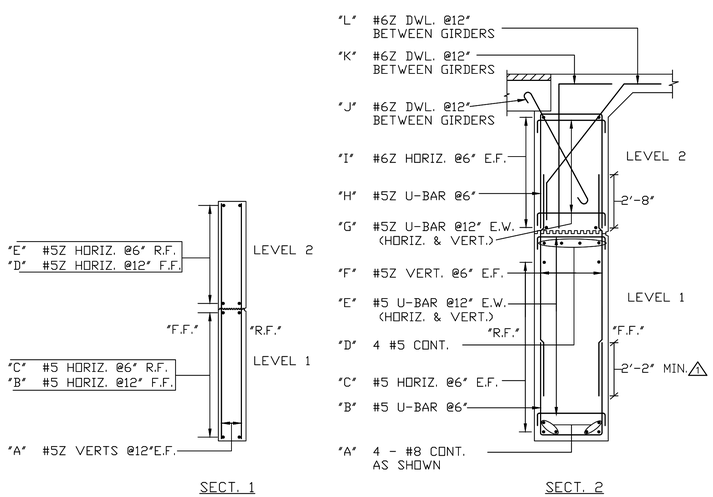

SECT. 1 SECT. 2

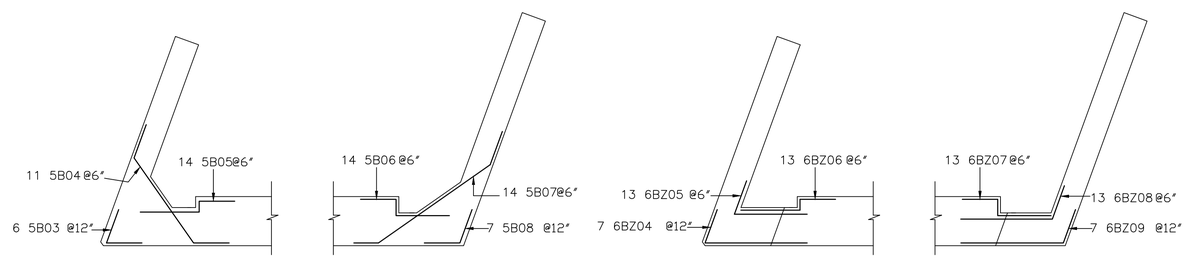

2 BELOW THE CONSTRUCTION JOINT
LEVEL 1

ABOVE THE CONSTRUCTION JOINT
LEVEL 2

CORNER BARS
FLD. ADJ. AS REQ.

6			
5			
4			
3	04/02/13	2	REV'D/ENG. COMM./APPROVAL
2	03/27/13	1	REV'D/ENG. COMM./APPROVAL
1	02/22/13	0	APPROVAL
	DATE	REV.#	SENT FOR

DIMENSION
DIMENSION FABRICATORS INC.
2000 7TH STEET
SCOTIA, N.Y. 12302
PH: (518) 374-1936
FAX (518) 374-4830
www.dimensionfabricators.com

STRUCTURE	VTAOT JAMAICA ER BRF 013-1(16)
LOCATION	JAMAICA, VT
ARCHITECT	
ENGINEER	
CUSTOMER	T. BUCK CONSTRUCTION

DRAWN BY	DATE	DFI #
WAYNE	02/22/13	8421

DRAWING COVERS	DRAWING #
ABUTMENT 2 REINF.	B