Release Number: 013								BAR LIST								
Bar Mark	Qty	Size	Total Length	Type	'A'	'B'	'C'	'D'	'E'	'F'	'G'	'H'	'J'	'K'	'O'	'R'
6C01	20	#6	12'-0 1/2"	25		1'-6"	3'-9 1/4"	1'-6"	3'-9 1/4"	1'-6"		3'-8"		1'-10"		
9C01	32	#9	29'-6"	17		4'-0"	21'-6"	4'-0"								
9C02	30	#9	23'-6"	17		4'-0"	15'-6"	4'-0"								

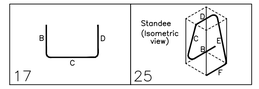

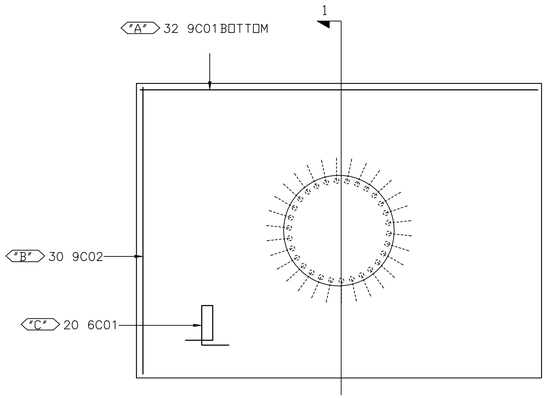

△2 △1 PIER FTG. PLAN
BOTTOM MAT

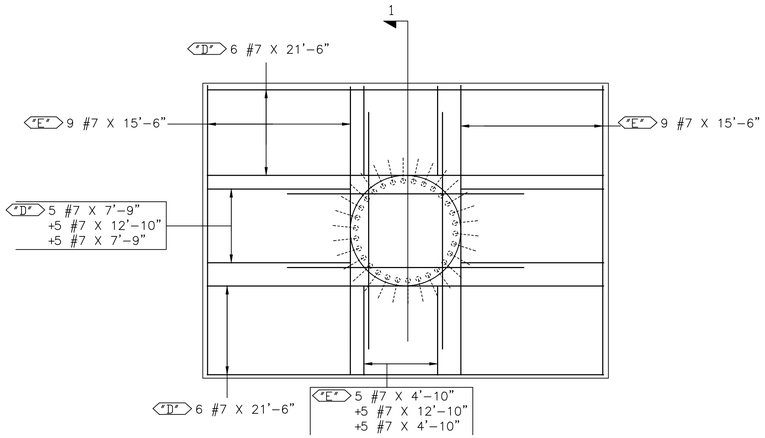

△2 PIER FTG. PLAN
TOP MAT
LAP = 3'-5"

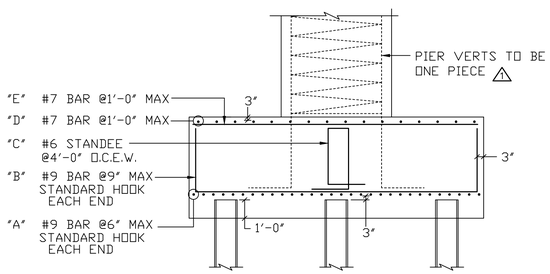

SECT. 1
PIER REINF ON FUTURE DWG.

-ELEVATIONS & DIMENSIONS SHOWN ON THIS DWG. ARE FOR REINF. DETAILING PURPOSES ONLY AND ARE NOT INTENDED FOR CONSTRUCTION.

-REINF. BARS ASTM A615 GRADE 60

FOR APPROVAL

6			
5			
4	05/13/13	△2	TOP MAT REVISED/APPROVAL
3	04/09/13	–	APPRVD AS RESUBM./FOR RECORD & JOB USE
2	03/27/13	△1	REV'D/ENG. COMM./APPROVAL
1	03/04/13	0	APPROVAL
	DATE	REV.#	SENT FOR

DIMENSION
DIMENSION FABRICATORS INC.
2000 7TH STEET
SCOTIA, N.Y. 12302
PH: (518) 374-1936
FAX (518) 374-4830
www.dimensionfabricators.com

STRUCTURE	VTAOT JAMAICA ER BRF 013-1(16)
LOCATION	JAMAICA, VT
ARCHITECT	
ENGINEER	
CUSTOMER	T. BUCK CONSTRUCTION

DRAWN BY	DATE	DFI #
WAYNE	03/04/13	8421

DRAWING COVERS	DRAWING #
PIER FTG. REINF.	C