SHOP DRAWINGS AND CALCULATIONS

For

JAMAICA BRIDGE
ER-BRF 013-1(16)

1-3/8" GRADE 150 THREADBAR FOR PIER CAP POST-TENSIONING AND PIER VERTICAL REINFORCEMENT

PREPARED FOR

T. BUCK CONSTRUCTION, INC.

RE-SUBMITTED FOR APPROVAL

March 22, 2013

INDEX

PAGE NO.:	CONTENTS:	
Page 3	Precast Sub-Cap – 1-3/8” Threadbar Assembly	PT-1
Page 4	Pier Cap – 1-3/8” Threadbar Assembly	PT-2
Page 5	1-3/8” Vertical Threadbar Assembly	PT-3
Page 6	Pier Schematic	PT-4
Page 7	Precast Sub-Cap – PT Threadbar Layouts and Details	PT-5
Page 8	Pier Cap – PT Threadbar Layouts and Details	PT-6
Page 9	Stressing Calculations.	

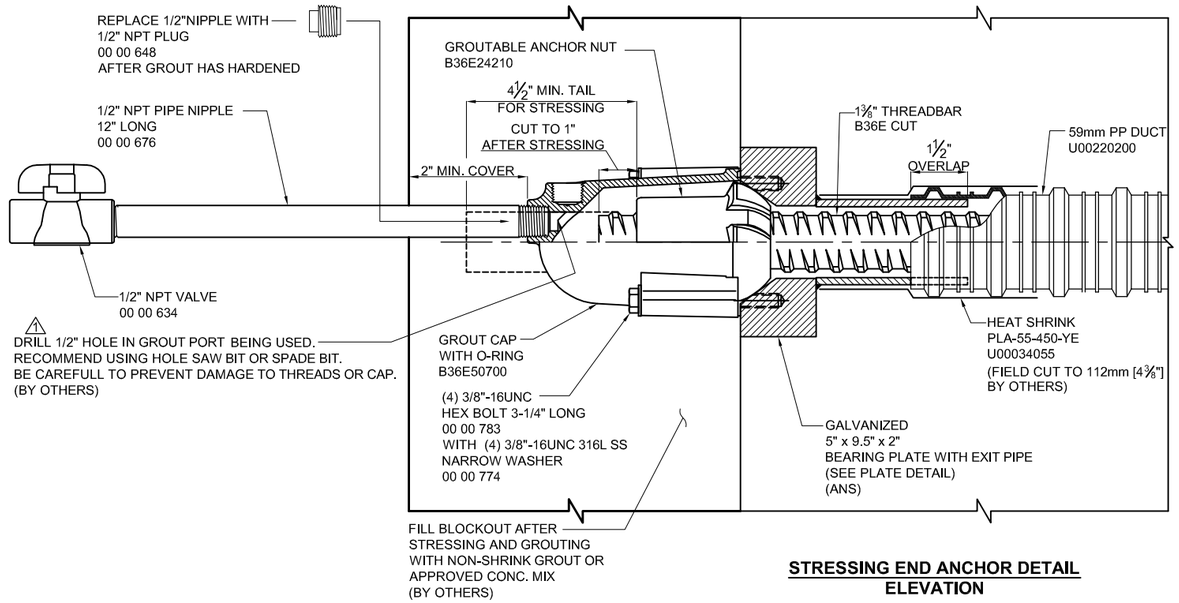

STRESSING END ANCHOR DETAIL
ELEVATION

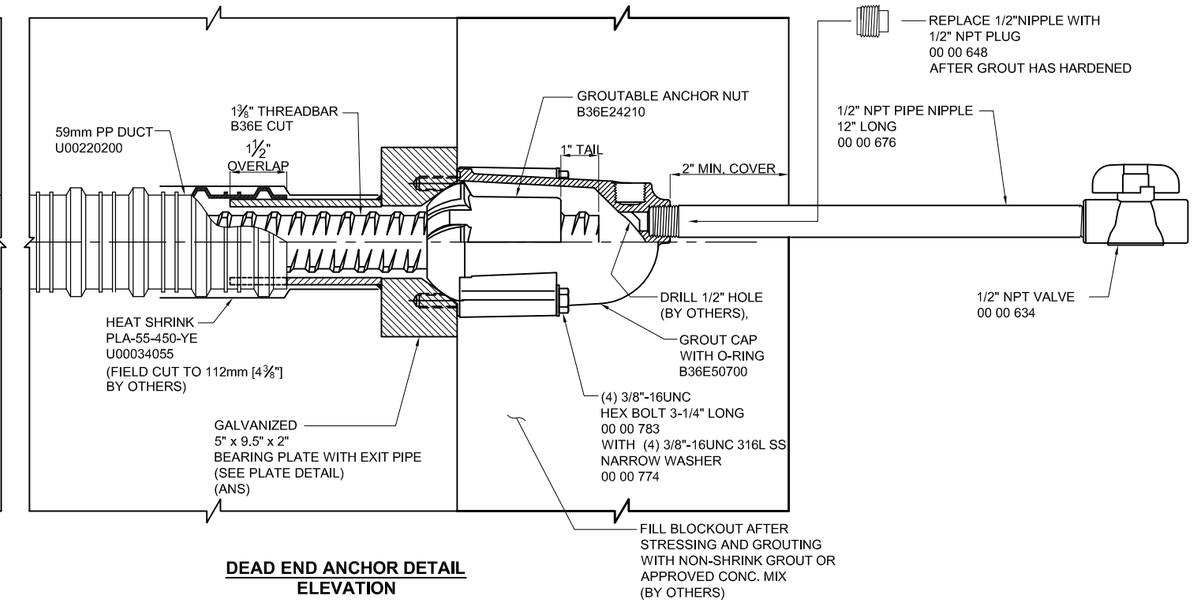

DEAD END ANCHOR DETAIL
ELEVATION

NOTES:

1. REQUIRED REINFORCING BARS ARE NOT SHOWN ON THIS DRAWING.
2. MAXIMUM ANGULAR MISALIGNMENT WHEN USING ANCHOR NUT: ±2°.
3. ⚠1 DUCT IS DELIVERED IN STRAIGHT SECTIONS AND IS NOT INTENDED TO BE COILED.
4. DUCT TO BE SUPPORTED EVERY 2 FT. MAXIMUM.

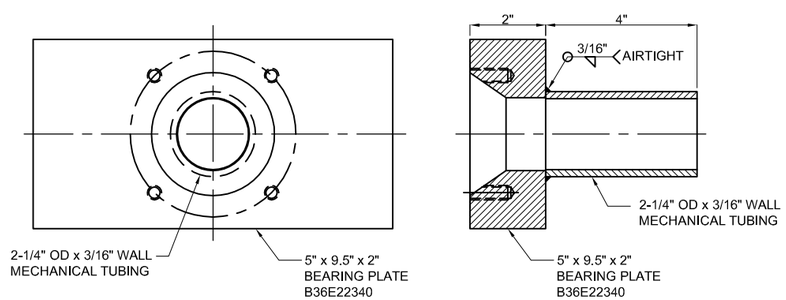

NOTE: GALVANIZED AS PER ASTM A123 AFTER WELDING.

GALVANIZED BEARING PLATE
(ANS)

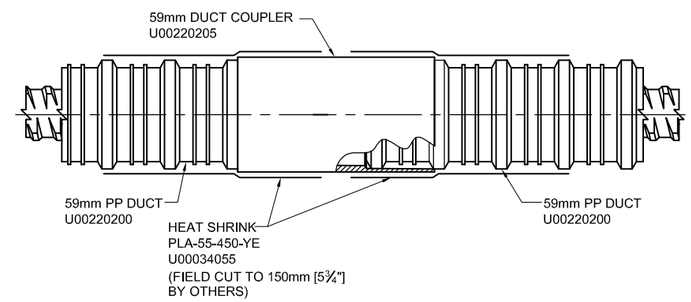

DUCT COUPLING DETAIL

GENERAL NOTES:

1. BARS TO BE 1-3/8"Ø DYWIDAG THREADBAR WITH A MINIMUM ULTIMATE STRESS OF 150ksi CONFORMING TO STRENGTH REQUIREMENTS OF ASTM A-722 TYPE II. ⚠1
2. ANCHORAGES TO BE DYWIDAG STANDARD AND GALVANIZED.
3. THE THREADBAR SHALL BE CAREFULLY UNLOADED AND STORED ON THE PROJECT SITE IN A MANNER TO AVOID DAMAGE AND CORROSION.
4. THE CONTRACTOR SHALL EXERCISE CARE TO ENSURE THAT THE THREADBARS AND OTHER COMPONENTS WHEN INCORPORATED INTO THE WORK ARE FREE FROM RUST, DIRT, PAINT, OIL, GREASE OR OTHER FOREIGN SUBSTANCE.
5. SHOP DRAWINGS REFER TO POST-TENSIONED SYSTEM DETAILS ONLY. FOR REINFORCEMENT DETAILS, SEE CONTRACT DRAWINGS.
6. NO WELDING SHALL BE PERFORMED IN THE VICINITY OF HIGH TENSILE STEEL.
7. ALL THREADBARS ARE ONE END STRESS ONLY, U.N.O.

THREADBAR STRESSING PROCEDURE:

1. INSPECT BAR STRESSING EXTENSION AND NUT TO BE SURE THEY ARE CLEAN AND FREE OF RUST AND OF PROPER LENGTH.
2. TIGHTEN ANCHOR NUT HAND. MEASURE AND RECORD LENGTH OF BAR EXTENDING OUT OF THE ANCHOR NUT.
3. THREAD PULL ROD ONTO THE BAR.
4. PLACE JACK OVER PULL ROD.
5. SCREW STRESSING NUT ONTO PULL ROD TILL IT BEARS ON THE BACK OF THE JACK.
6. STRESS BAR TO 20% OF JACKING FORCE AS PER SEQUENCE SHOWN IN THE TABLE AND MARK THE BAR FOR ELONGATION MEASUREMENT.
7. STRESS BAR TO 100% OF JACKING FORCE AS PER SEQUENCE SHOWN IN THE TABLE.
8. TIGHTEN NUT WITH RACHET HANDLE. (DO NOT USE CHEATER BAR)
9. RELEASE PRESSURE. REMOVE JACK.
10. MEASURE AND RECORD ELONGATIONS.

MATERIAL LIST

PART NO.	DESCRIPTION	MATERIAL SPECIFICATION
B36E CUT	1-3/8" Ø THREADBAR	ASTM A722 TYPE II STEEL
ANS	5" x 9.5" x 2" BEARING PLATE (USING B36E22340) WITH EXIT 2 1/4" x 3/16" WALL 4" LONG MECHANICAL TUBING PIPE & BOLT HOLES, GALV.	STEEL PLATE, ASTM A36 (GALV.)
B36E24210	GROUTABLE ANCHOR NUT	STEEL FORGING, ASTM A521-76 (1987) NORMALIZED BHN=180-220
B36E50700	BAR GROUT CAP WITH O-RING	NYLON 6, 20% GLASS FIBER FILLED CAP
U00220200	59mm CORRUGATED PP DUCT	PPX3
U00220205	59mm DUCT COUPLER	HDPE
00 00 783	3/8"-16UNC HEX BOLT 3-1/4" LONG	
00 00 774	NARROW WASHER FOR 3/8"-16UNC HEX BOLT	316L STAINLESS STEEL
00 00 676	1/2" NPT NIPPLE, 12" LONG	SCH 40 BLACK WELDED STEEL
00 00 634	1/2" NPT VALVE	PVC
00 00 648	1/2" NPT PLUG	HDPE
U00034055	HEAT SHRINK, PLA-55-450-YE	CANUSA

⚠ WARNING: READ AND COMPLY WITH ALL APPLICABLE SAFETY AND OPERATING INSTRUCTIONS AND WARNINGS FOR THREADBAR STRESSING BEFORE STARTING ANY WORK OR OPERATION.

CAUTION WHEN USING HIGH STRENGTH DYWIDAG THREADBAR® (GRADE 150)
DO NOT WELD TO BAR.
DO NOT USE BAR AS GROUND CONNECTION FOR WELDING.
DO NOT ALLOW HOT SLAG OR SPARKS TO TOUCH BAR.
DO NOT DAMAGE BAR SURFACE.
DO NOT USE BARS WITH KINKS OR SHARP BENDS.
FAILURE TO HEED THIS WARNING COULD CAUSE BAR TO BREAK RESULTING IN INJURY OR DAMAGE

⚠ CAUTION: WHEN PRESSURIZING GROUT CAPS, DO NOT STAND BEHIND CAPS!

OWNER: STATE OF VERMONT, AGENCY OF TRANSPORTATION
CONTRACTOR: T. BUCK CONSTRUCTION, INC.
PROJECT: **JAMAICA, ER-BRF 013-1(16)**

PRECAST SUB-CAP
1-3/8" THREADBAR ASSEMBLY

DATE: 02/06/13 | DWG: I.TIRA | CHK: EZ | APP: EZ

THIS DRAWING, THE PERTINENT ENCLOSURES, DESCRIPTIONS, CALCULATIONS ETC. AND THEIR CONTENTS ARE THE PROPERTY OF **DYWIDAG SYSTEMS INTERNATIONAL, USA, INC.** THEY ARE NOT ALLOWED TO BE DUPLICATED WITHOUT OUR PERMISSION. THEY ARE ALSO NOT TO BE SHOWN OR EXPLAINED FOR ANY REASON TO A THIRD PARTY OTHER THAN FOR REASONS EXPRESSLY INTENDED BY **DSI's** SUBMITTAL TO THE ORIGINAL RECEIVER. THEY HAVE TO BE RETURNED UPON REQUEST.

DYWIDAG SYSTEMS INTERNATIONAL, USA INC. DOES NOT ASSUME ANY LIABILITY FOR THE DESIGN OF THIS STRUCTURE. THIS SHOP DRAWING IS INTENDED TO PROVIDE POST TENSIONING DETAILS ONLY.

WEIGHT	REV.	DATE	ISSUE DESCRIPTION	NAME	CHKD.	JOB NUMBER
	0	02/14/13	FOR APPROVAL	IT	EZ	J092604
	⚠1	03/22/13	FOR APPROVAL	IT	EZ	
SCALE 1 : 4						DRAWING NUMBER: PT-1

DYWIDAG-SYSTEMS INTERNATIONAL, USA, INC.
POST TENSIONING / REINFORCING UNIT PHONE: 630-739-1100
320 MARMON DRIVE - BOLINGBROOK, IL FAX: 630-739-1405

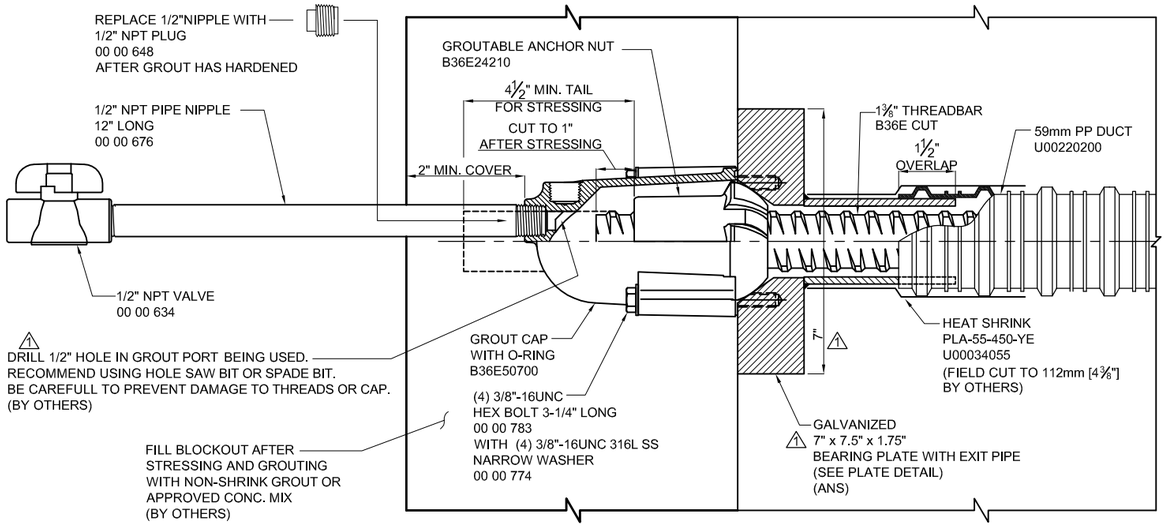

STRESSING END ANCHOR DETAIL
ELEVATION

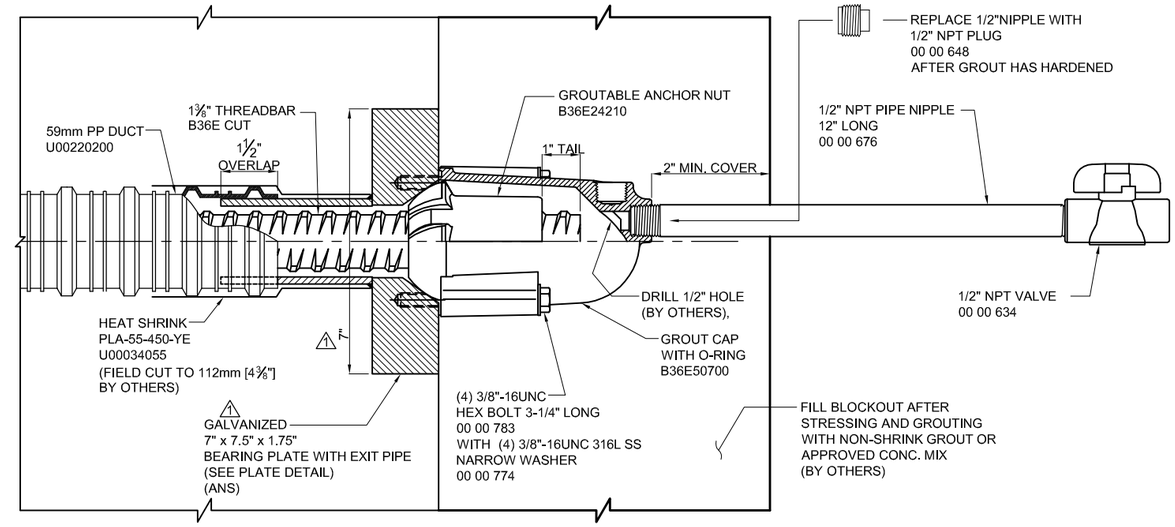

DEAD END ANCHOR DETAIL
ELEVATION

NOTES:

1. REQUIRED REINFORCING BARS ARE NOT SHOWN ON THIS DRAWING.
2. MAXIMUM ANGULAR MISALIGNMENT WHEN USING ANCHOR NUT: ±2°.
3. DUCT IS DELIVERED IN STRAIGHT SECTIONS AND IS NOT INTENDED TO BE COILED.
4. DUCT TO BE SUPPORTED EVERY 2 FT. MAXIMUM.

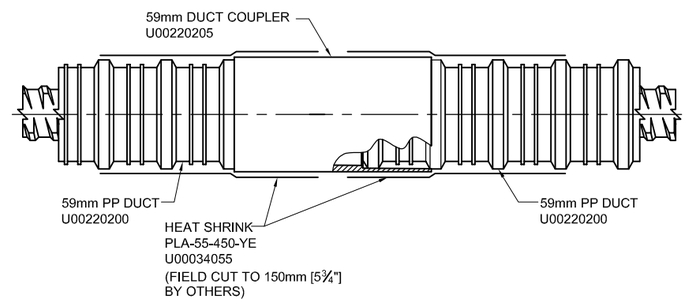

DUCT COUPLING DETAIL

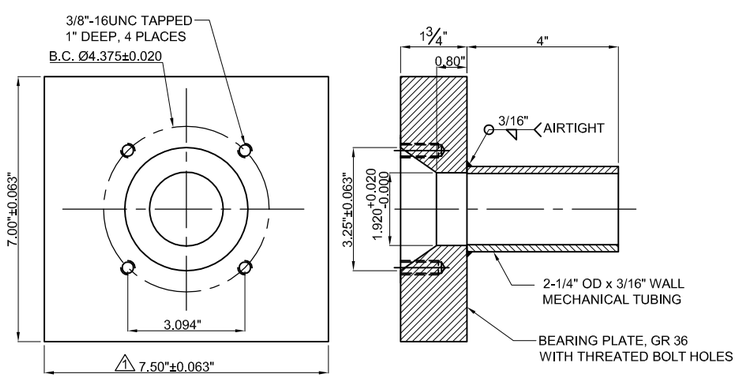

NOTE: GALVANIZED AS PER ASTM A123 AFTER WELDING.

GALVANIZED BEARING PLATE
(ANS)

GENERAL NOTES:

1. BARS TO BE 1-3/8"Ø DYWIDAG THREADBAR WITH A MINIMUM ULTIMATE STRESS OF 150ksi CONFORMING TO STRENGTH REQUIREMENTS OF ASTM A-722 TYPE II.
2. ANCHORAGES TO BE DYWIDAG STANDARD AND GALVANIZED.
3. THE THREADBAR SHALL BE CAREFULLY UNLOADED AND STORED ON THE PROJECT SITE IN A MANNER TO AVOID DAMAGE AND CORROSION.
4. THE CONTRACTOR SHALL EXERCISE CARE TO ENSURE THAT THE THREADBARS AND OTHER COMPONENTS WHEN INCORPORATED INTO THE WORK ARE FREE FROM RUST, DIRT, PAINT, OIL, GREASE OR OTHER FOREIGN SUBSTANCE.
5. SHOP DRAWINGS REFER TO POST-TENSIONED SYSTEM DETAILS ONLY. FOR REINFORCEMENT DETAILS, SEE CONTRACT DRAWINGS.
6. NO WELDING SHALL BE PERFORMED IN THE VICINITY OF HIGH TENSILE STEEL.
7. ALL THREADBARS ARE ONE END STRESS ONLY, U.N.O.

THREADBAR STRESSING PROCEDURE:

1. INSPECT BAR STRESSING EXTENSION AND NUT TO BE SURE THEY ARE CLEAN AND FREE OF RUST AND OF PROPER LENGTH.
2. TIGHTEN ANCHOR NUT HAND. MEASURE AND RECORD LENGTH OF BAR EXTENDING OUT OF THE ANCHOR NUT.
3. THREAD PULL ROD ONTO THE BAR.
4. PLACE JACK OVER PULL ROD.
5. SCREW STRESSING NUT ONTO PULL ROD TILL IT BEARS ON THE BACK OF THE JACK.
6. STRESS BAR TO 20% OF JACKING FORCE AS PER SEQUENCE SHOWN IN THE TABLE AND MARK THE BAR FOR ELONGATION MEASUREMENT.
7. STRESS BAR TO 100% OF JACKING FORCE AS PER SEQUENCE SHOWN IN THE TABLE.
8. TIGHTEN NUT WITH RACHET HANDLE. (DO NOT USE CHEATER BAR)
9. RELEASE PRESSURE. REMOVE JACK.
10. MEASURE AND RECORD ELONGATIONS.

MATERIAL LIST

PART NO.	DESCRIPTION	MATERIAL SPECIFICATION
B36E CUT	1-3/8" Ø THREADBAR	ASTM A722 TYPE II STEEL
ANS	7" x 7.5" x 1.75" BEARING PLATE WITH EXIT 2 1/4" x 3/16" WALL 4" LONG MECHANICAL TUBING PIPE & BOLT HOLES, GALV.	STEEL PLATE, ASTM A36 (GALV.)
B36E24210	GROUTABLE ANCHOR NUT	STEEL FORGING, ASTM A521-76 (1987) NORMALIZED BHN=180-220
B36E50700	BAR GROUT CAP WITH O-RING	NYLON 6, 20% GLASS FIBER FILLED CAP
U00220200	59mm CORRUGATED PP DUCT	PPX3
U00220205	59mm DUCT COUPLER	HDPE
00 00 783	3/8"-16UNC HEX BOLT 3-1/4" LONG	
00 00 774	NARROW WASHER FOR 3/8"-16UNC HEX BOLT	316L STAINLESS STEEL
00 00 676	1/2" NPT NIPPLE, 12" LONG	SCH 40 BLACK WELDED STEEL
00 00 634	1/2" NPT VALVE	PVC
00 00 648	1/2" NPT PLUG	HDPE
U00034055	HEAT SHRINK, PLA-55-450-YE	CANUSA

WARNING: READ AND COMPLY WITH ALL APPLICABLE SAFETY AND OPERATING INSTRUCTIONS AND WARNINGS FOR THREADBAR STRESSING BEFORE STARTING ANY WORK OR OPERATION.

CAUTION WHEN USING HIGH STRENGTH DYWIDAG THREADBAR® (GRADE 150)
DO NOT WELD TO BAR.
DO NOT USE BAR AS GROUND CONNECTION FOR WELDING.
DO NOT ALLOW HOT SLAG OR SPARKS TO TOUCH BAR.
DO NOT DAMAGE BAR SURFACE.
DO NOT USE BARS WITH KINKS OR SHARP BENDS.
FAILURE TO HEED THIS WARNING COULD CAUSE BAR TO BREAK RESULTING IN INJURY OR DAMAGE

CAUTION: WHEN PRESSURIZING GROUT CAPS, DO NOT STAND BEHIND CAPS!

OWNER: STATE OF VERMONT, AGENCY OF TRANSPORTATION
CONTRACTOR: T. BUCK CONSTRUCTION, INC.
PROJECT: **JAMAICA, ER-BRF 013-1(16)**

PIER CAP
1-3/8" THREADBAR ASSEMBLY

DATE: 02/06/13 | DWG: I.TIRA | CHK: EZ | APP: EZ

THIS DRAWING, THE PERTINENT ENCLOSURES, DESCRIPTIONS, CALCULATIONS ETC. AND THEIR CONTENTS ARE THE PROPERTY OF **DYWIDAG SYSTEMS INTERNATIONAL, USA, INC.** THEY ARE NOT ALLOWED TO BE DUPLICATED WITHOUT OUR PERMISSION. THEY ARE ALSO NOT TO BE SHOWN OR EXPLAINED FOR ANY REASON TO A THIRD PARTY OTHER THAN FOR REASONS EXPRESSLY INTENDED BY **DSI's** SUBMITTAL TO THE ORIGINAL RECEIVER. THEY HAVE TO BE RETURNED UPON REQUEST.

DYWIDAG SYSTEMS INTERNATIONAL, USA INC. DOES NOT ASSUME ANY LIABILITY FOR THE DESIGN OF THIS STRUCTURE. THIS SHOP DRAWING IS INTENDED TO PROVIDE POST TENSIONING DETAILS ONLY.

WEIGHT	REV.	DATE	ISSUE DESCRIPTION	NAME	CHKD.	JOB NUMBER
	0	02/14/13	FOR APPROVAL	IT	EZ	J092604
	1	03/22/13	FOR APPROVAL	IT	EZ	
SCALE 1 : 4						DRAWING NUMBER: PT-2

DYWIDAG-SYSTEMS INTERNATIONAL, USA, INC.
POST TENSIONING / REINFORCING UNIT PHONE: 630-739-1100
320 MARMON DRIVE - BOLINGBROOK, IL FAX: 630-739-1405

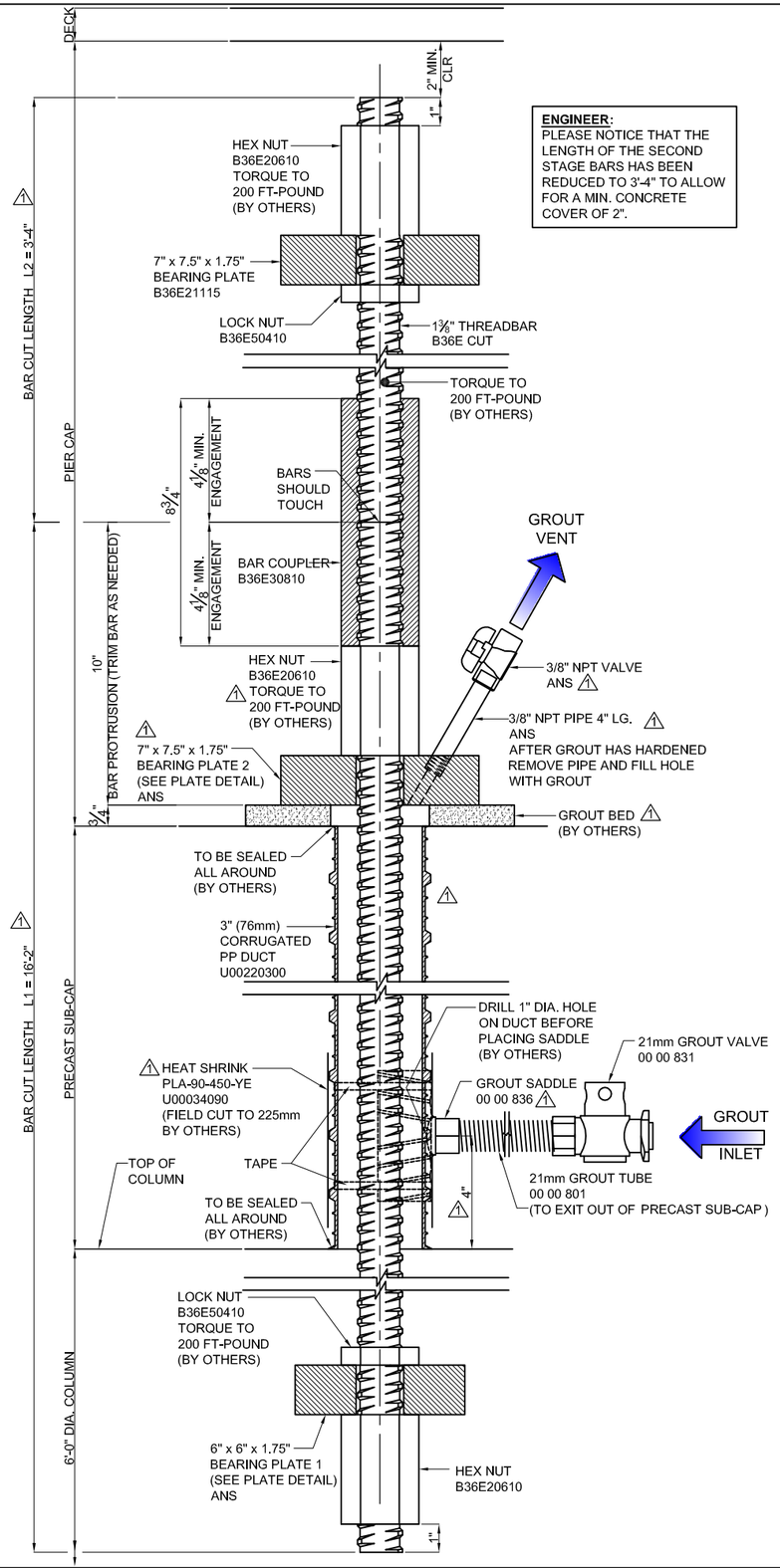

ENGINEER:
PLEASE NOTICE THAT THE LENGTH OF THE SECOND STAGE BARS HAS BEEN REDUCED TO 3'-4" TO ALLOW FOR A MIN. CONCRETE COVER OF 2".

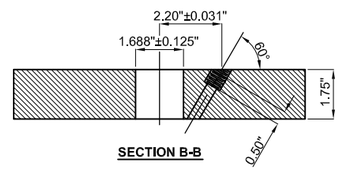

SECTION B-B

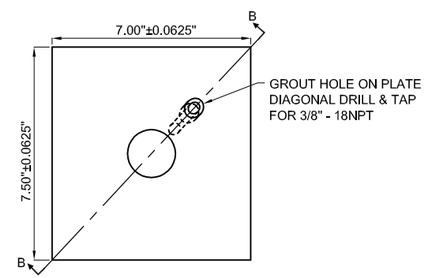

BEARING PLATE 2 GR 36
ANS

GENERAL NOTES:

1. BARS TO BE 1-3/8"Ø DYWIDAG THREADBAR WITH A MINIMUM ULTIMATE STRESS OF 150ksi CONFORMING TO STRENGTH REQUIREMENTS OF ASTM A-722 TYPE II.
2. ANCHORAGES TO BE DYWIDAG STANDARD.
3. THE THREADBAR SHALL BE CAREFULLY UNLOADED AND STORED ON THE PROJECT SITE IN A MANNER TO AVOID DAMAGE AND CORROSION.
4. THE CONTRACTOR SHALL EXERCISE CARE TO ENSURE THAT THE THREADBARS AND OTHER COMPONENTS WHEN INCORPORATED INTO THE WORK ARE FREE FROM RUST, DIRT, PAINT, OIL, GREASE OR OTHER FOREIGN SUBSTANCE.
5. SHOP DRAWINGS REFER TO THREADBAR SYSTEM DETAILS ONLY. FOR REINFORCEMENT AND INSTALLATION DETAILS, SEE CONTRACT DRAWINGS.
6. NO WELDING SHALL BE PERFORMED IN THE VICINITY OF HIGH TENSILE STEEL.
7. TORQUING AS INDICATED IS CRITICAL FOR PROPER PERFORMANCE OF THE THREADBAR SYSTEM.

MATERIAL LIST

	PART NO.	DESCRIPTION	MATERIAL SPECIFICATION
	B36E CUT	1-3/8" Ø THREADBAR	ASTM A722 TYPE II STEEL
	B36E21115	7" x 7.5" x 1.75" BEARING PLATE	STEEL PLATE, ASTM A36
	ANS	6" x 6" x 1.75" BEARING PLATE 1	
△1	ANS	7" x 7.5" x 1.75" BEARING PLATE 2	
	B36E20610	HEX NUT	STEEL FORGING, ASTM A521-76 (1987) NORMALIZED BHN=180-220
	B36E50410	LOCK NUT	SEAMLESS MECHANICAL TUBING C1026 CD
	B36E30810	BAR COUPLER	STEEL BAR, COLD DRAWN, AISI1117
△1	00 00 836	GROUT SADDLE	HDPE
	00 00 801	21mm GROUT TUBE	HDPE
	00 00 831	21mm GROUT VALVE	PLASTIC
	U00220300	3" (76mm) CORRUGATED PP DUCT	PPX3
△1	ANS	3/8" NPT PIPE 4" LG.	SCH 80 PVC
△1	ANS	3/8" NPT VALVE	PVC
△1	U00034090	HEAT SHRINK PLA-90-450-YE	CANUSA

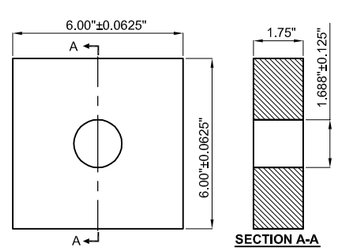

SECTION A-A

BEARING PLATE 1 GR 36
ANS

OWNER: STATE OF VERMONT, AGENCY OF TRANSPORTATION

CONTRACTOR: T. BUCK CONSTRUCTION, INC.

PROJECT: **JAMAICA, ER-BRF 013-1(16)**

1-3/8" VERTICALTHREADBAR ASSEMBLY

DATE: 02/06/13	DWG: I.TIRA	CHK: EZ	APP: EZ

THIS DRAWING, THE PERTINENT ENCLOSURES, DESCRIPTIONS, CALCULATIONS ETC. AND THEIR CONTENTS ARE THE PROPERTY OF **DYWIDAG SYSTEMS INTERNATIONAL, USA, INC.** THEY ARE NOT ALLOWED TO BE DUPLICATED WITHOUT OUR PERMISSION. THEY ARE ALSO NOT TO BE SHOWN OR EXPLAINED FOR ANY REASON TO A THIRD PARTY OTHER THAN FOR REASONS EXPRESSLY INTENDED BY **DSI's** SUBMITTAL TO THE ORIGINAL RECEIVER. THEY HAVE TO BE RETURNED UPON REQUEST.

DYWIDAG SYSTEMS INTERNATIONAL, USA INC. DOES NOT ASSUME ANY LIABILITY FOR THE DESIGN OF THIS STRUCTURE. THIS SHOP DRAWING IS INTENDED TO PROVIDE POST TENSIONING DETAILS ONLY.

WEIGHT	REV.	DATE	ISSUE DESCRIPTION	NAME	CHKD.	JOB NUMBER
	0	02/14/13	FOR APPROVAL	IT	EZ	J092604
	△1	03/22/13	FOR APPROVAL	IT	EZ	
SCALE 3/16" = 1"						DRAWING NUMBER: PT-3

DYWIDAG-SYSTEMS INTERNATIONAL, USA, INC.
POST TENSIONING / REINFORCING UNIT PHONE: 630-739-1100
320 MARMON DRIVE - BOLINGBROOK, IL FAX: 630-739-1405

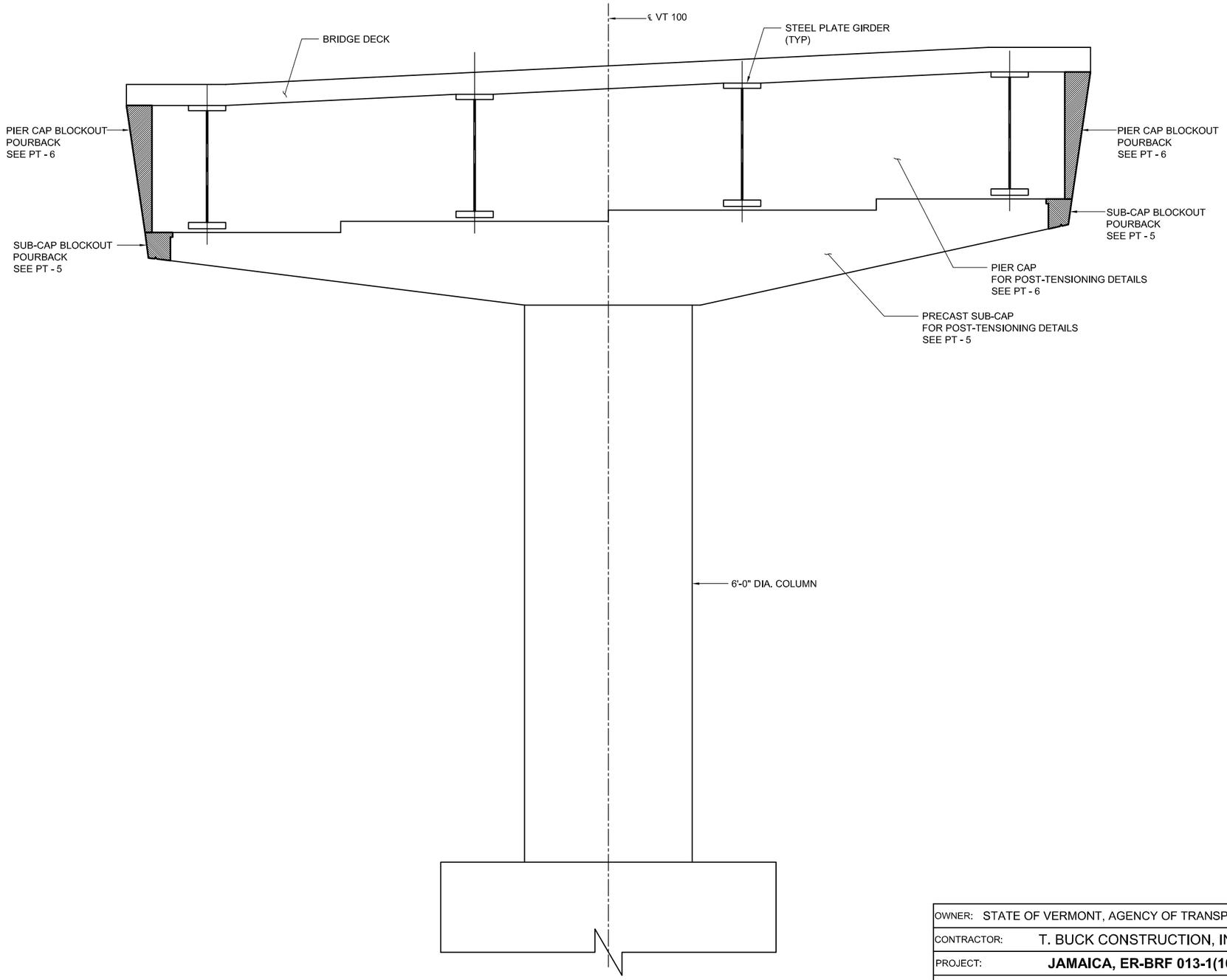

PIER SCHEMATIC

OWNER:	STATE OF VERMONT, AGENCY OF TRANSPORTATION
CONTRACTOR:	T. BUCK CONSTRUCTION, INC.
PROJECT:	**JAMAICA, ER-BRF 013-1(16)**
	PIER SCHEMATIC

DATE: 02/06/13	DWG: I.TIRA	CHK: EZ	APP: EZ

THIS DRAWING, THE PERTINENT ENCLOSURES, DESCRIPTIONS, CALCULATIONS ETC. AND THEIR CONTENTS ARE THE PROPERTY OF **DYWIDAG SYSTEMS INTERNATIONAL, USA, INC.** THEY ARE NOT ALLOWED TO BE DUPLICATED WITHOUT OUR PERMISSION. THEY ARE ALSO NOT TO BE SHOWN OR EXPLAINED FOR ANY REASON TO A THIRD PARTY OTHER THAN FOR REASONS EXPRESSLY INTENDED BY **DSI's** SUBMITTAL TO THE ORIGINAL RECEIVER. THEY HAVE TO BE RETURNED UPON REQUEST.

DYWIDAG SYSTEMS INTERNATIONAL, USA INC. DOES NOT ASSUME ANY LIABILITY FOR THE DESIGN OF THIS STRUCTURE. THIS SHOP DRAWING IS INTENDED TO PROVIDE POST TENSIONING DETAILS ONLY.

WEIGHT	REV.	DATE	ISSUE DESCRIPTION	NAME	CHKD.	JOB NUMBER
	0	02/14/13	FOR APPROVAL	IT	EZ	**J092604**
	1	03/22/13	FOR APPROVAL	IT	EZ	
SCALE 1/4" = 1'-0"						DRAWING NUMBER:
						PT-4

DYWIDAG-SYSTEMS INTERNATIONAL, USA, INC.
POST TENSIONING / REINFORCING UNIT PHONE: 630-739-1100
320 MARMON DRIVE - BOLINGBROOK, IL FAX: 630-739-1405

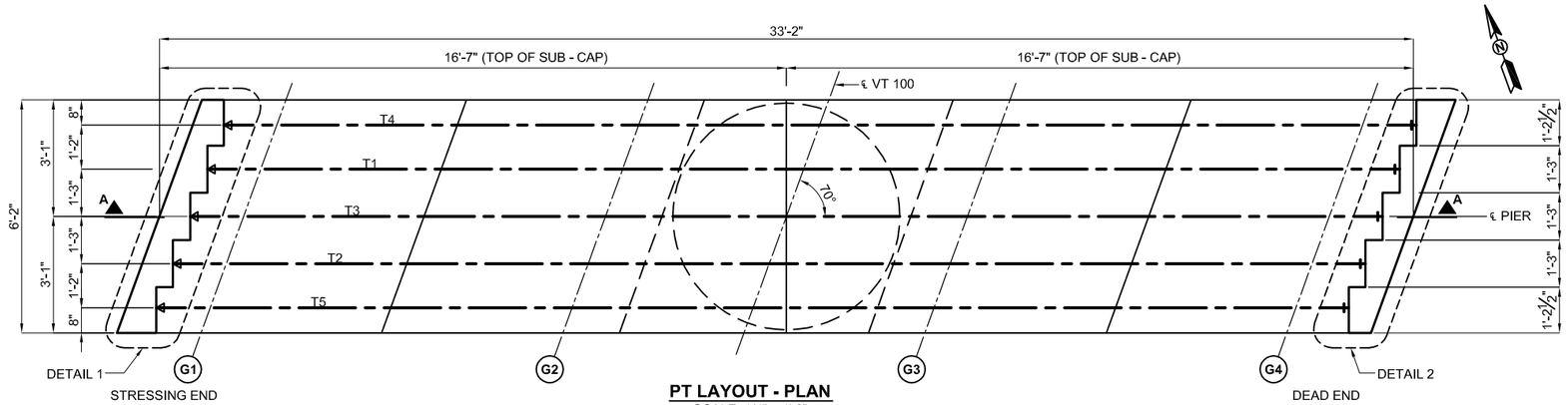

PT LAYOUT - PLAN
SCALE: 1/4" = 1'-0"

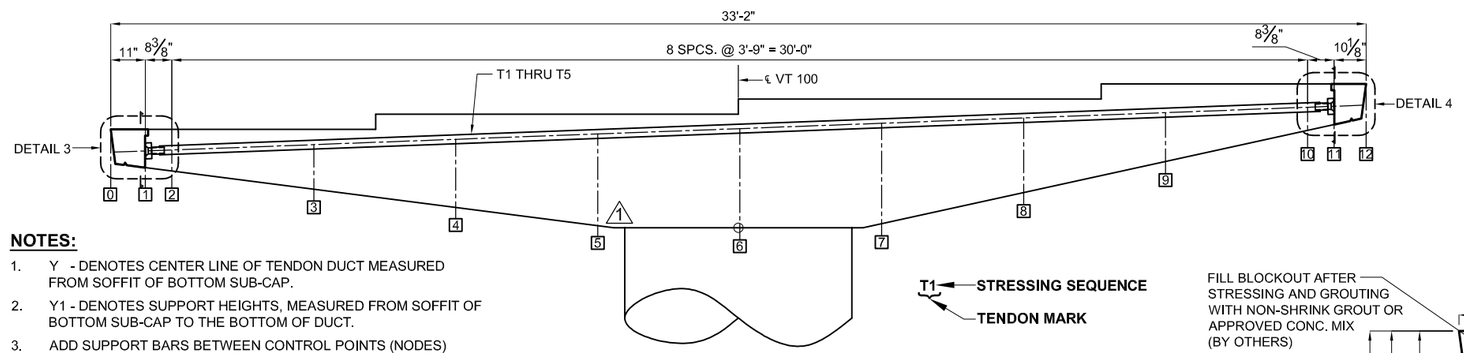

PROFILE - SECTION A-A
SCALE: 1/4" = 1'-0"

T1 — STRESSING SEQUENCE
TENDON MARK

NOTES:

1. Y - DENOTES CENTER LINE OF TENDON DUCT MEASURED FROM SOFFIT OF BOTTOM SUB-CAP.
2. Y1 - DENOTES SUPPORT HEIGHTS, MEASURED FROM SOFFIT OF BOTTOM SUB-CAP TO THE BOTTOM OF DUCT.
3. ADD SUPPORT BARS BETWEEN CONTROL POINTS (NODES) EVERY 2 FT. MAXIMUM.
4. FOR DRIP NOTCH SEE SHEET 41 OF 85.

	TENDON	Node	0	1	2	3	4	5	6	7	8	9	10	11	12
			A.P.											A.P.	
	MARK	Dist. from Point 0 (ft)	0.00	0.92	1.62	5.37	9.12	12.87	16.62	20.37	24.12	27.87	31.62	32.32	33.17
1	T1 thru T5	Y (in)		5.30	6.70	14.16	21.62	29.08	31.42	31.81	23.65	15.49	7.33	5.80	
		Y1 (in)		4.06	5.46	12.92	20.38	27.84	30.18	30.57	22.41	14.25	6.09		

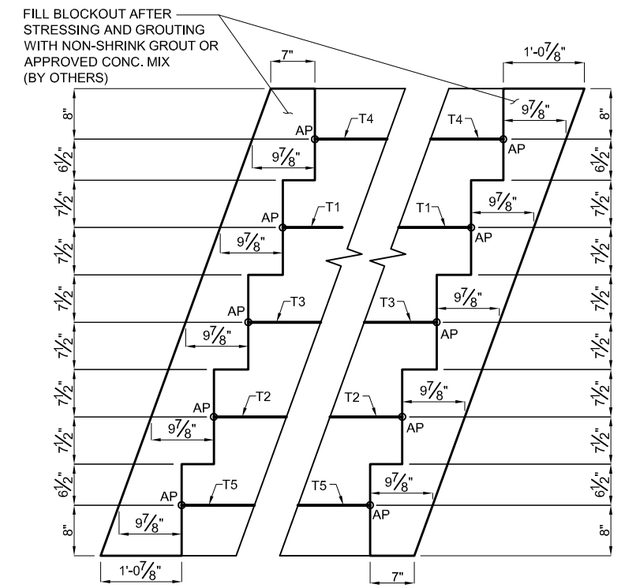

DETAIL 1 - BLOCKOUT
SCALE: 1/2" = 1'-0"

DETAIL 2 - BLOCKOUT
SCALE: 1/2" = 1'-0"

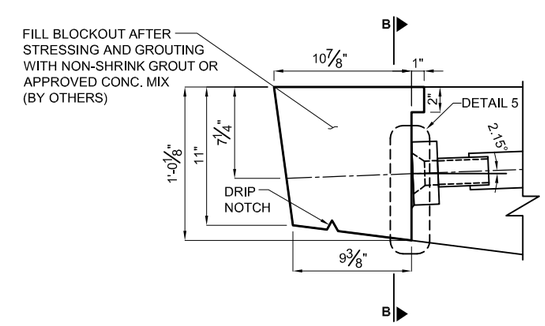

DETAIL 3 - BLOCKOUT
SCALE: 1" = 1'-0"

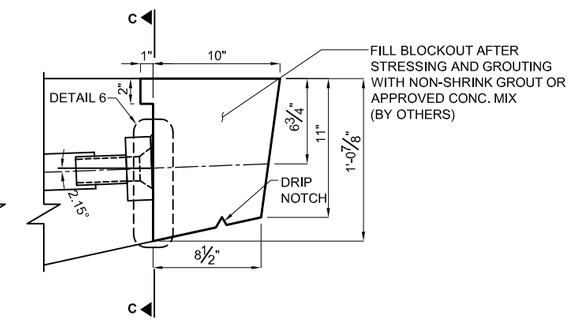

DETAIL 4 - BLOCKOUT
SCALE: 1" = 1'-0"

STRESSING SCHEDULE

PIER SUB CAP TENDONS	STRESSING LENGTH	AREA OF BAR	JACKING FORCE	AVERAGE LOCK-OFF FORCE	TARGET ELONGATION AFTER LOCK-OFF
	L	A	JF	EF	TEAL
	(FT)	(IN2)	(KIPS)	(KIPS)	(IN)
ALL	31.42	1.58	165.9	157.6	1.27

NOTE:
1. STRESSING OPERATIONS SHALL NOT BEGIN UNTIL CONCRETE HAS REACHED A COMPRESSIVE STRENGTH OF 4,000 PSI.
2. AS PER NOTE 52 IN SHEET 3 OF 85, TENSION SHALL BE VERIFIED BY PERFORMING A LIFT-OFF TEST PRIOR TO GROUTING.

SEE DRAWING PT-1 FOR ASSEMBLY DETAILS.

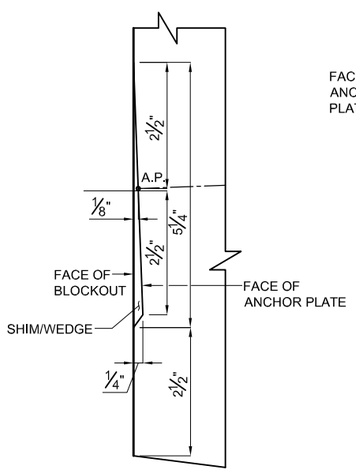

DETAIL 5 - BLOCKOUT
N.T.S.

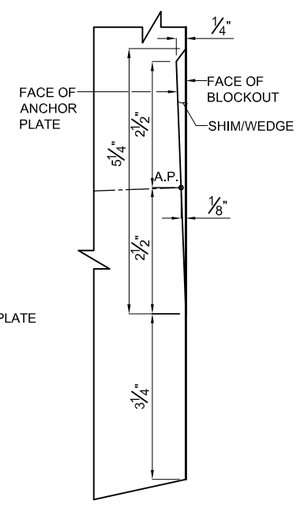

DETAIL 6 - BLOCKOUT
N.T.S.

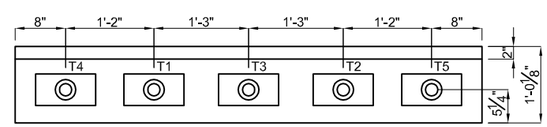

SECTION B-B
SCALE: 1/2" = 1'-0"

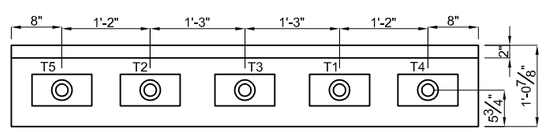

SECTION C-C
SCALE: 1/2" = 1'-0"

NOTES:
1. ONLY PLATE SHOWN.
2. FOR STRESSING STAGING SEE NOTES 4-6 IN SHEET 38 OF 85.

OWNER:	STATE OF VERMONT, AGENCY OF TRANSPORTATION
CONTRACTOR:	T. BUCK CONSTRUCTION, INC.
PROJECT:	**JAMAICA, ER-BRF 013-1(16)**

PRECAST SUB-CAP
PT THREADBAR LAYOUTS AND DETAILS

DATE: 02/06/13 | DWG: I.TIRA | CHK: EZ | APP: EZ

THIS DRAWING, THE PERTINENT ENCLOSURES, DESCRIPTIONS, CALCULATIONS ETC. AND THEIR CONTENTS ARE THE PROPERTY OF **DYWIDAG SYSTEMS INTERNATIONAL, USA, INC.** THEY ARE NOT ALLOWED TO BE DUPLICATED WITHOUT OUR PERMISSION. THEY ARE ALSO NOT TO BE SHOWN OR EXPLAINED FOR ANY REASON TO A THIRD PARTY OTHER THAN FOR REASONS EXPRESSLY INTENDED BY **DSI's** SUBMITTAL TO THE ORIGINAL RECEIVER. THEY HAVE TO BE RETURNED UPON REQUEST.

DYWIDAG SYSTEMS INTERNATIONAL, USA INC. DOES NOT ASSUME ANY LIABILITY FOR THE DESIGN OF THIS STRUCTURE. THIS SHOP DRAWING IS INTENDED TO PROVIDE POST TENSIONING DETAILS ONLY.

WEIGHT	REV.	DATE	ISSUE DESCRIPTION	NAME	CHKD.	JOB NUMBER
	0	02/14/13	FOR APPROVAL	IT	EZ	**J092604**
	1	03/22/13	FOR APPROVAL	IT	EZ	
SCALE AS SHOWN						DRAWING NUMBER: **PT-5**

DYWIDAG-SYSTEMS INTERNATIONAL, USA, INC.
POST TENSIONING / REINFORCING UNIT PHONE: 630-739-1100
320 MARMON DRIVE - BOLINGBROOK, IL FAX: 630-739-1405

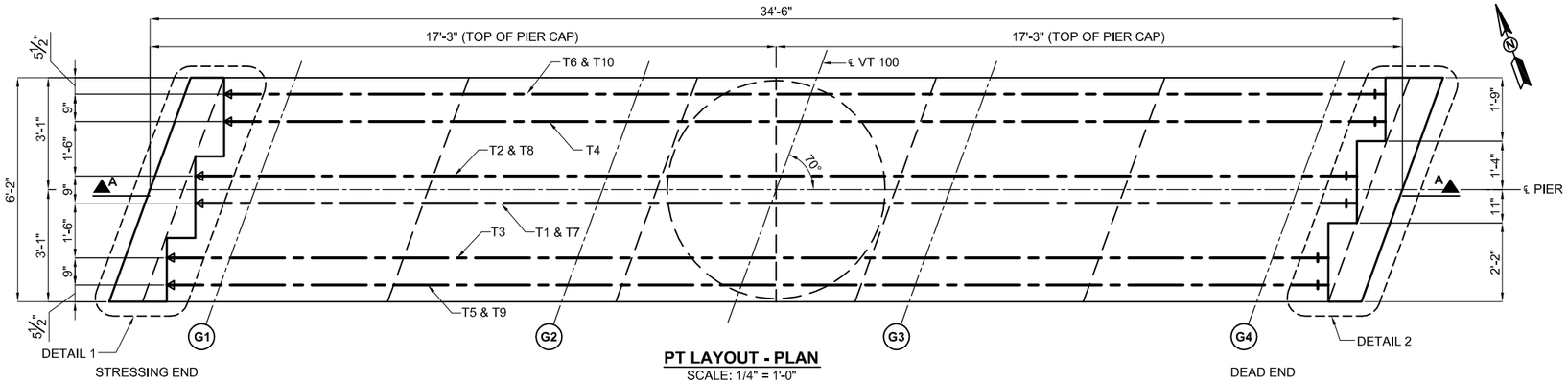

PT LAYOUT - PLAN
SCALE: 1/4" = 1'-0"

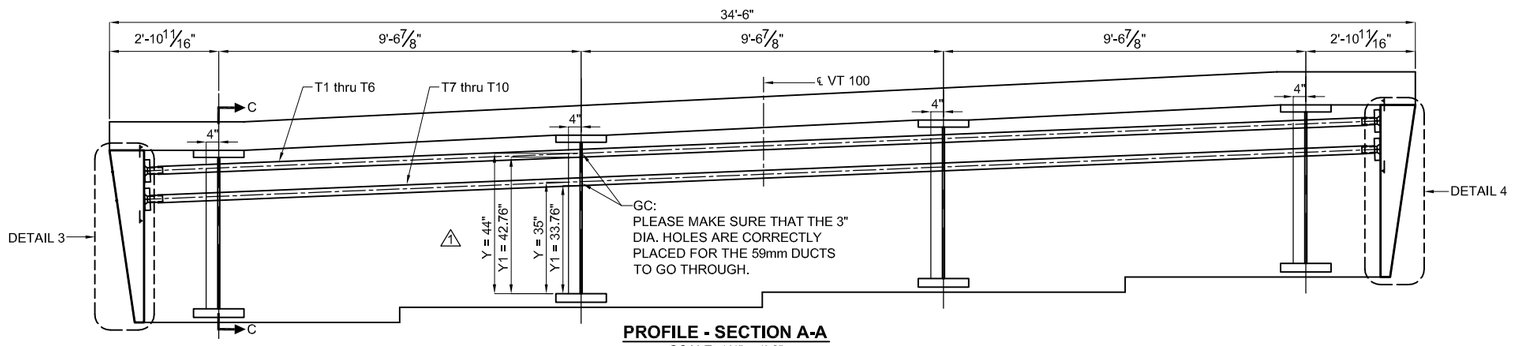

PROFILE - SECTION A-A
SCALE: 1/4" = 1'-0"

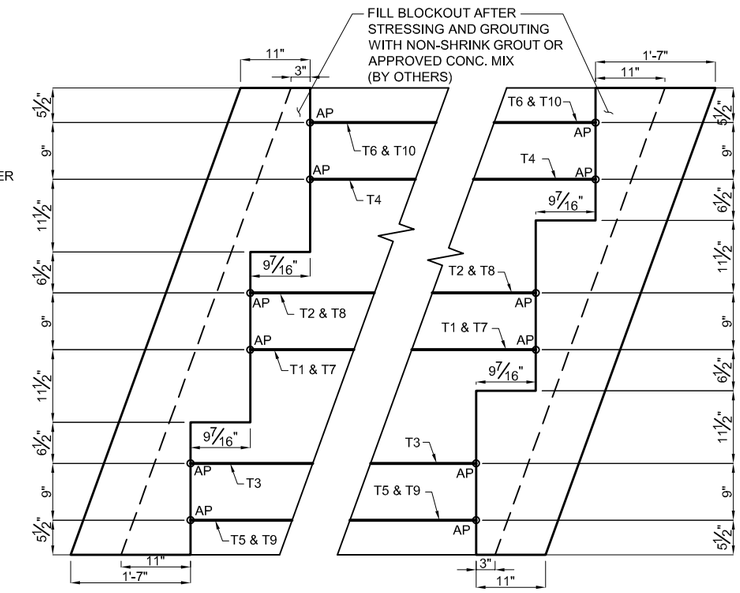

DETAIL 1 - BLOCKOUT
SCALE: 1/2" = 1'-0"

DETAIL 2 - BLOCKOUT
SCALE: 1/2" = 1'-0"

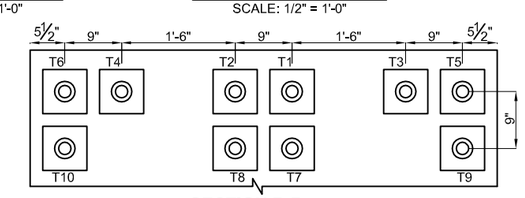

SECTION B-B

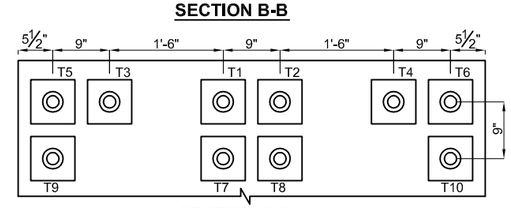

SECTION C-C

NOTES:
1. ONLY PLATE SHOWN.
2. FOR STRESSING STAGING SEE NOTES IN SHEET 38 OF 85.

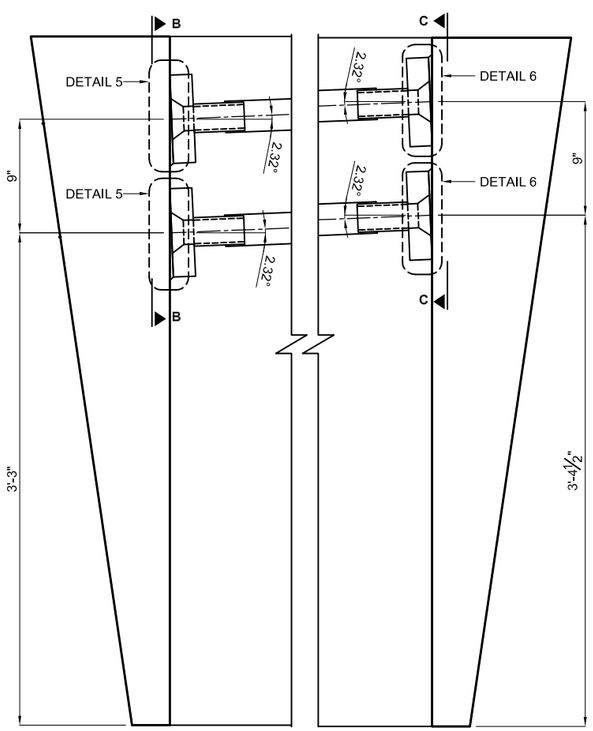

DETAIL 3 - BLOCKOUT
SCALE: 1" = 1'-0"

DETAIL 4 - BLOCKOUT
SCALE: 1" = 1'-0"

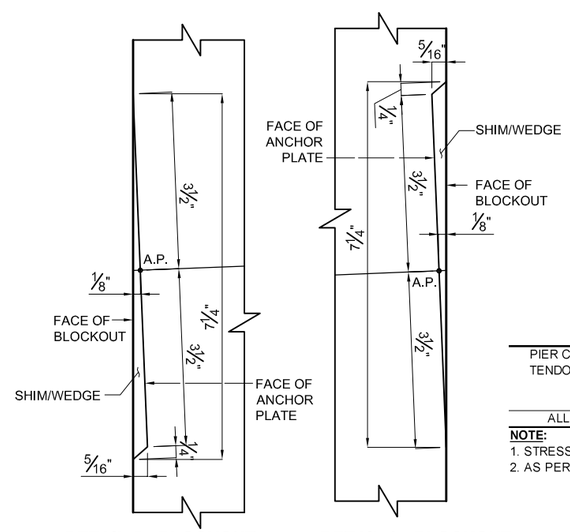

DETAIL 5 - BLOCKOUT
N.T.S.

DETAIL 6 - BLOCKOUT
N.T.S.

T1 ← STRESSING SEQUENCE
TENDON MARK

NOTES:

1. Y - DENOTES CENTER LINE OF TENDON DUCT MEASURED FROM TOP OF BOTTOM FLANGE OF STEEL PLATE GIRDER AT CENTER LINE OF PIER.
2. Y1 - DENOTES SUPPORT HEIGHTS MEASURED FROM TOP OF BOTTOM FLANGE OF STEEL PLATE GIRDER TO THE BOTTOM OF DUCT AT CENTER LINE OF PIER.
3. Y AND Y1 ARE TYPICAL AT EACH GIRDER.
4. SUPPORT DUCT EVERY 2 FT. MAXIMUM. ADD SUPPORT BARS BETWEEN GIRDER WEB.
5. FOR LOCATION OF 3" DIA. HOLES ON WEBS SEE STRUCTURAL DRAWINGS.

STRESSING SCHEDULE

PIER CAP TENDONS	STRESSING LENGTH	AREA OF BAR	JACKING FORCE	AVERAGE LOCK-OFF FORCE	TARGET ELONGATION AFTER LOCK-OFF
	L	A	JF	EF	TEAL
	(FT)	(IN2)	(KIPS)	(KIPS)	(IN)
ALL	32.67	1.58	165.9	157.9	1.32

NOTE:
1. STRESSING OPERATIONS SHALL NOT BEGIN UNTIL CONCRETE HAS REACHED A COMPRESSIVE STRENGTH OF 4,000 PSI.
2. AS PER NOTE 52 IN SHEET 3 OF 85, TENSION SHALL BE VERIFIED BY PERFORMING A LIFT-OFF TEST PRIOR TO GROUTING.

SEE DRAWING PT-2 FOR ASSEMBLY DETAILS.

OWNER: STATE OF VERMONT, AGENCY OF TRANSPORTATION
CONTRACTOR: T. BUCK CONSTRUCTION, INC.
PROJECT: **JAMAICA, ER-BRF 013-1(16)**

PIER CAP
PT THREADBAR LAYOUTS AND DETAILS

DATE: 02/06/13 | DWG: I.TIRA | CHK: EZ | APP: EZ

THIS DRAWING, THE PERTINENT ENCLOSURES, DESCRIPTIONS, CALCULATIONS ETC. AND THEIR CONTENTS ARE THE PROPERTY OF **DYWIDAG SYSTEMS INTERNATIONAL, USA, INC.** THEY ARE NOT ALLOWED TO BE DUPLICATED WITHOUT OUR PERMISSION. THEY ARE ALSO NOT TO BE SHOWN OR EXPLAINED FOR ANY REASON TO A THIRD PARTY OTHER THAN FOR REASONS EXPRESSLY INTENDED BY **DSI's** SUBMITTAL TO THE ORIGINAL RECEIVER. THEY HAVE TO BE RETURNED UPON REQUEST.

DYWIDAG SYSTEMS INTERNATIONAL, USA INC. DOES NOT ASSUME ANY LIABILITY FOR THE DESIGN OF THIS STRUCTURE. THIS SHOP DRAWING IS INTENDED TO PROVIDE POST TENSIONING DETAILS ONLY.

WEIGHT	REV.	DATE	ISSUE DESCRIPTION	NAME	CHKD.	JOB NUMBER
	0	02/14/13	FOR APPROVAL	IT	EZ	J092604
	1	03/22/13	FOR APPROVAL	IT	EZ	
SCALE AS SHOWN						DRAWING NUMBER: PT-6

DYWIDAG-SYSTEMS INTERNATIONAL, USA, INC.
POST TENSIONING / REINFORCING UNIT PHONE: 630-739-1100
320 MARMON DRIVE - BOLINGBROOK, IL FAX: 630-739-1405

```
-----------------------------------------------------------------------------
|                            ADAPT CORPORATION                              |
|         1733 Woodside Road, Suite 220, Redwood City, CA 94061 USA         |
|                  Tel: (650) 306 2400, Fax: (650) 364 4678                 |
|        E-mail: support@adaptsoft.com,  Web site: www.adaptsoft.com        |
-----------------------------------------------------------------------------
|                        ADAPT-FELT  Standard  4.07                         |
|           ADAPT POST-TENSIONING STRESS LOSS & ELONGATION PROGRAM           |
|                        LICENSED TO: DSI, USA Inc.                         |
-----------------------------------------------------------------------------
 This program calculates the long-term and immediate stress losses in a post-
 tensioned tendon. It outputs the elongations at the stressing ends and the
 final stress profile along the tendon.
-----------------------------------------------------------------------------
DATE: Feb 13, 2013                                          TIME: 10:27:59


P R O J E C T   T I T L E :
Jamaica VT Pier Sub Cap


S P E C I F I C   T I T L E :
1-3/8"  Threadbar



F R I C T I O N   &   E L O N G A T I O N   C A L C U L A T I O N S :

INPUT PARAMETERS :
Coefficient of angular friction (meu)................       .25000 /radian
Coefficient of wobble friction (K)...................       .00020 rad/ft
Ultimate strength of strand .........  ..............    150.00    ksi
Ratio of jacking stress to strand's ultimate strength       .70
Anchor set ..........................................       .06    inch
Cross-sectional area of strand ......................      1.580   inch^2
Total Number of Strands per Tendon...................      1
Modulus of elasticity of strand .....................  29700.00    ksi
STRESSING ...........................................      AT LEFT END


LEGEND :
P ....... = Tendon profile type defined as: 1=reversed parabola;
            2=partial/regular parabola; 3=harped; 4=general
X1/L etc  = horizontal distances to control points in geometry of the
            tendon divided by span length
Stresses tabulated are after anchor set but before long-term losses.


TENDON ID,  GEOMETRY AND STRESS PROFILE  (Sub Cap PT)

     LENGTH    < TENDON HEIGHT in.>  Horizontal ratios   <-  STRESS (ksi)  -->
SPAN  ft    P  start  center  right   X1/L X2/L X3/L     start   center  right
-1----2-----3----4------5------6-------7----8----9--------10------11------12-

 1   31.42  1     .00    .00    .00    .05  .50  .05      99.42   99.75 100.08
---------------------------------------
     31.42 ft (total length of tendon)
```

SUMMARY :

Average initial stress (after release).....	99.75	ksi
Long term stress losses	.00	ksi
Final average stress	99.75	ksi
Final average force in tendon	157.60	k
Anchor set influence from left pull (100.08ksi; .667) ..	31.42	ft
Elongation at left pull before anchor set	1.33	inch
Elongation at left pull after anchor set	1.27	inch
Total elongation after anchor set	1.27	inch
Ratio of total elongation to tendon length after anchor set	.040302	inch/ft
Jacking force	165.90	k

CRITICAL STRESS RATIOS :
At stressing .700; At anchorage .667; Max along tendon .667

DETAIL OF STRESSES AT 1/20TH POINTS ALONG EACH SPAN

Units are in ksi

X/L	Span 1
.00	99.42
.05	99.45
.10	99.48
.15	99.52
.20	99.55
.25	99.58
.30	99.62
.35	99.65
.40	99.68
.45	99.71
.50	99.75
.55	99.78
.60	99.81
.65	99.85
.70	99.88
.75	99.91
.80	99.94
.85	99.98
.90	100.01
.95	100.04
1.00	100.08

ADAPT CORPORATION
1733 Woodside Road, Suite 220, Redwood City, CA 94061 USA
Tel: (650) 306 2400, Fax: (650) 364 4678
E-mail: support@adaptsoft.com, Web site: www.adaptsoft.com

ADAPT-FELT Standard 4.07
ADAPT POST-TENSIONING STRESS LOSS & ELONGATION PROGRAM
LICENSED TO: DSI, USA Inc.

This program calculates the long-term and immediate stress losses in a post-tensioned tendon. It outputs the elongations at the stressing ends and the final stress profile along the tendon.

DATE: Feb 13, 2013 TIME: 10:35:29

P R O J E C T T I T L E :
Jamaica VT Pier Cap

S P E C I F I C T I T L E :
1-3/8" Threadbar

F R I C T I O N & E L O N G A T I O N C A L C U L A T I O N S :

INPUT PARAMETERS :

Coefficient of angular friction (meu).....	.25000	/radian
Coefficient of wobble friction (K).....	.00020	rad/ft
Ultimate strength of strand	150.00	ksi
Ratio of jacking stress to strand's ultimate strength	.70	
Anchor set	.06	inch
Cross-sectional area of strand	1.580	inch^2
Total Number of Strands per Tendon.....	1	
Modulus of elasticity of strand	29700.00	ksi
STRESSING	AT LEFT END	

LEGEND :
P ..... = Tendon profile type defined as: 1=reversed parabola;
2=partial/regular parabola; 3=harped; 4=general
X1/L etc = horizontal distances to control points in geometry of the
tendon divided by span length
Stresses tabulated are after anchor set but before long-term losses.

TENDON ID, GEOMETRY AND STRESS PROFILE (Cap PT)

	LENGTH		< TENDON HEIGHT in.>			Horizontal ratios			<- STRESS (ksi) ->		
SPAN	ft	P	start	center	right	X1/L	X2/L	X3/L	start	center	right
1	32.67	1	.00	.00	.00	.05	.50	.05	99.58	99.92	100.26

32.67 ft (total length of tendon)

SUMMARY :

Average initial stress (after release).....	99.92	ksi
Long term stress losses	.00	ksi
Final average stress	99.92	ksi
Final average force in tendon	157.88	k
Anchor set influence from left pull (100.26ksi; .668) ..	32.67	ft
Elongation at left pull before anchor set	1.38	inch
Elongation at left pull after anchor set	1.32	inch
Total elongation after anchor set	1.32	inch
Ratio of total elongation to tendon length after anchor set	.040373	inch/ft
Jacking force	165.90	k

CRITICAL STRESS RATIOS :
At stressing .700; At anchorage .668; Max along tendon .668

DETAIL OF STRESSES AT 1/20TH POINTS ALONG EACH SPAN

Units are in ksi

X/L	Span 1
.00	99.58
.05	99.61
.10	99.65
.15	99.68
.20	99.72
.25	99.75
.30	99.79
.35	99.82
.40	99.85
.45	99.89
.50	99.92
.55	99.96
.60	99.99
.65	100.03
.70	100.06
.75	100.09
.80	100.13
.85	100.16
.90	100.20
.95	100.23
1.00	100.26