S.D. Ireland Companies
Precast Division

193 Industrial Ave. Williston, VT 05495
P.O. Box 2286 South Burlington, VT 05407
p: 802-863-6222 f: 802-860-1528
www.sdireland.com

Attention:	Brian Emmons	Date:	1/30/2013
Company:	T-Buck	Job Name:	Jamaica ER-BRF 013-1(16)
Address:		Job Number:	SDI 13251
City, St, Zip:		Regarding:	Precast Sub Cap submittal
Ph: / Fax:			

WE ARE SENDING:

- [ ] Quote
- [ ] Details
- [ ] Other: _____
- [x] Submittals
- [ ] Prints
- [ ] Plans
- [ ] Specifications
- [ ] Copy Of Letter
- [ ] Change Order
- [ ] Samples
- [ ] Revised Submittals

Copies	Date	Pages	Description
1	1/30/2013	1	Transmittal Cover
1	1/30/2013	4	Sub Cap fabrication drawings
1	1/30/2013	3	Starcon lifts
1	1/30/2013	34	Dual coated reinforcing
1	1/30/2013	2	Typical bollisters / Chairs
1	1/30/2013	5	Mix design

These Are Submitted as Checked Below:

- [x] For Approval
- [ ] Approved as Submitted
- [ ] Resubmit __ Copies for Approval
- [ ] For Your Use
- [ ] Approved as Noted
- [ ] Submit__ Copies for Distribution
- [ ] As Requested
- [ ] Returned for Corrections
- [ ] Return __ Corrected Prints
- [ ] For Review and Comment
- [ ] Prints Returned After Loan to Us
- [ ] For Bids Due: _____
- [ ] Other:

Notes/Remarks:

Vermont Agency of Transportation
RECEIVED
Jamaica Complete submittal - SUBCAP.pdf
CK'D BY _____ OK'D BY _____
February 1, 2013
RESUBMIT _____ Approved _____
BY DATE

Thank you. Tim Dudley 802-658-0201 ext 253
tdudley@sdireland.com

Copy To: _____

Signed: _____

If enclosures are not as noted, kindly notify us at once.

Volume: ±16.78 CY
Weight: ±67,103 lbs

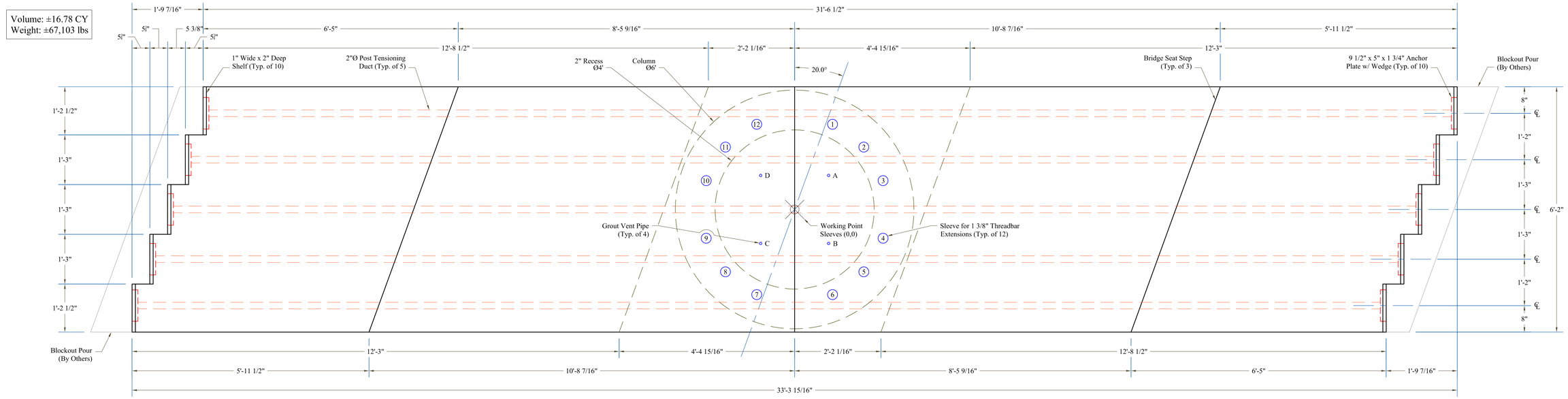

Plan View

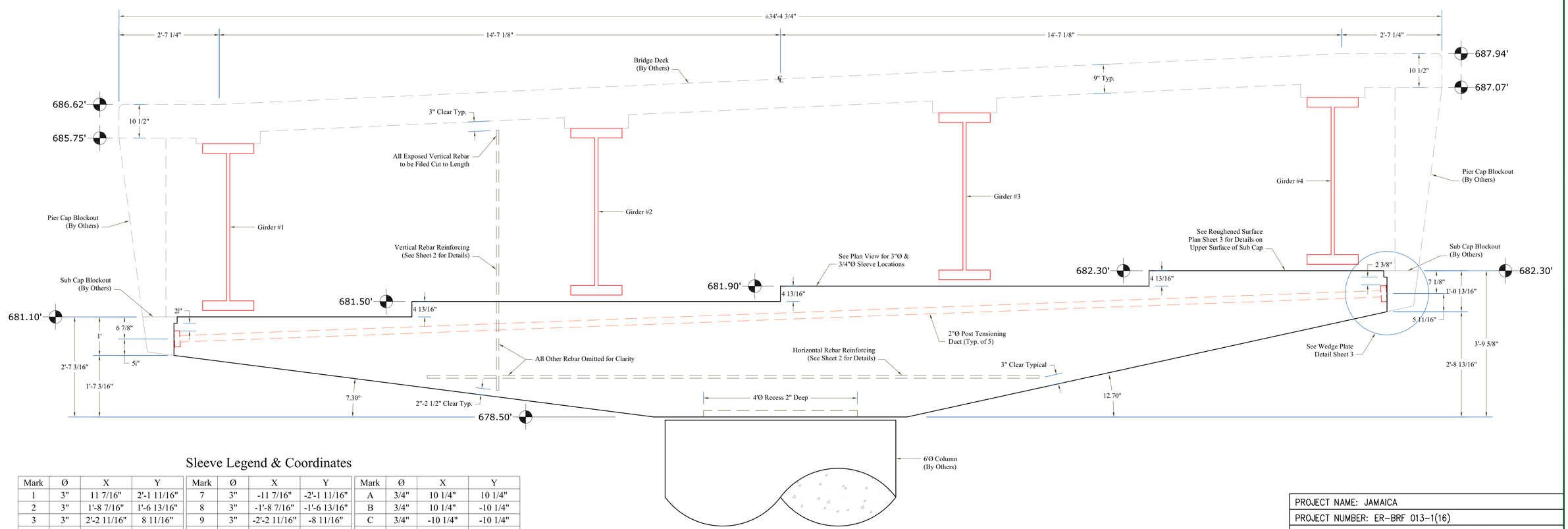

Elevation View at ℄

Sleeve Legend & Coordinates

Mark	Ø	X	Y	Mark	Ø	X	Y	Mark	Ø	X	Y
1	3"	11 7/16"	2'-1 11/16"	7	3"	-11 7/16"	-2'-1 11/16"	A	3/4"	10 1/4"	10 1/4"
2	3"	1'-8 7/16"	1'-6 13/16"	8	3"	-1'-8 7/16"	-1'-6 13/16"	B	3/4"	10 1/4"	-10 1/4"
3	3"	2'-2 11/16"	8 11/16"	9	3"	-2'-2 11/16"	-8 11/16"	C	3/4"	-10 1/4"	-10 1/4"
4	3"	2'-2 11/16"	-8 11/16"	10	3"	-2'-2 11/16"	8 11/16"	D	3/4"	-10 1/4"	10 1/4"
5	3"	1'-8 7/16"	-1'-6 13/16"	11	3"	-1'-8 7/16"	1'-6 13/16"				
6	3"	11 7/16"	-2'-1 11/16"	12	3"	-11 7/16"	2'-1 11/16"				

SD Ireland PRECAST DIVISION

PROJECT NAME: JAMAICA	
PROJECT NUMBER: ER-BRF 013-1(16)	
PRECAST SUB-CAP PRODUCTION DRAWING SET	
DRAWING: PLAN LAYOUT & ELEVATION VIEW	
DRAWN BY: CD	DATE: 01/29/13
APPROVED BY: TD	SHEET: 1 OF 4

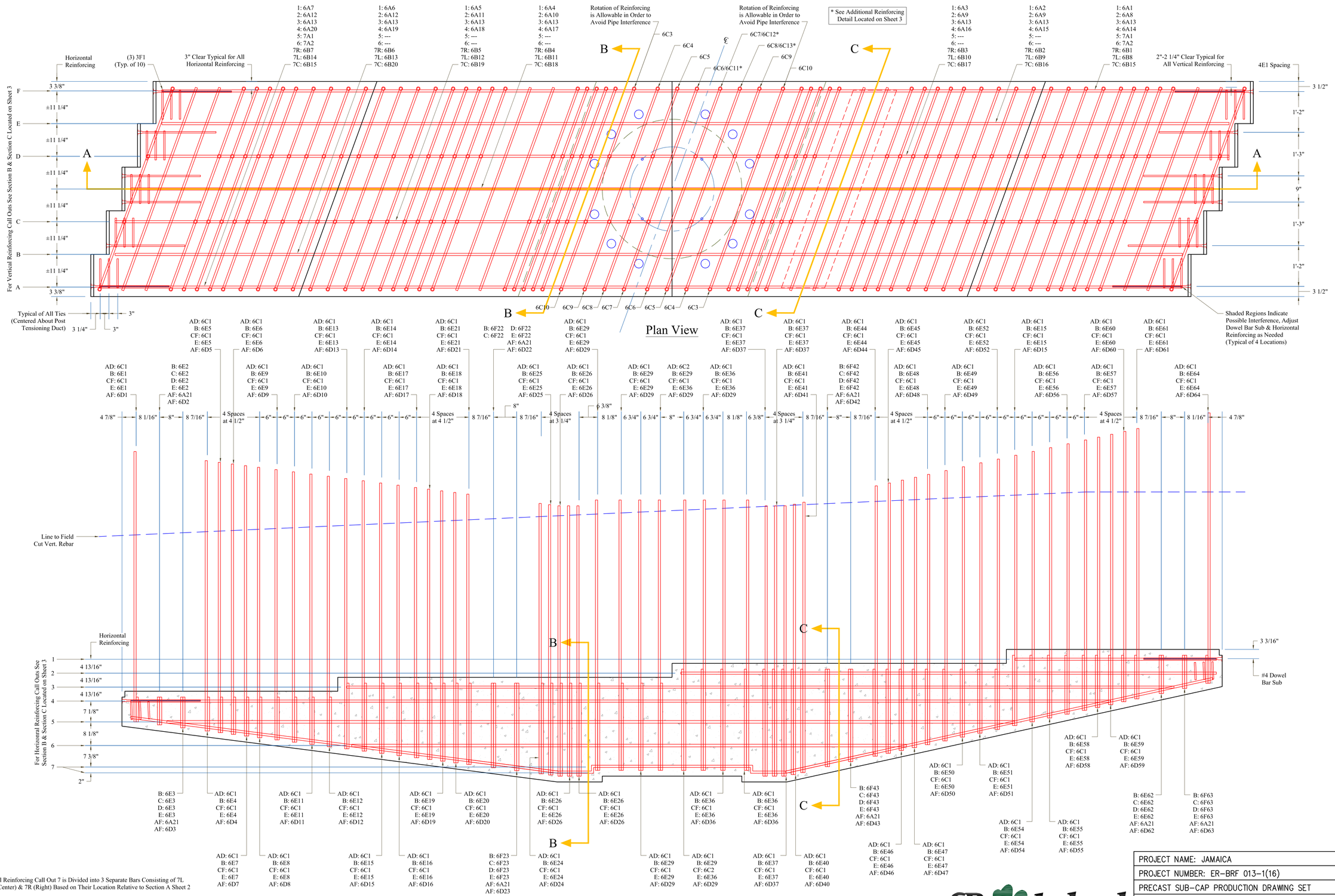

Section A

Notes:

1. Horizontal Reinforcing Call Out 7 is Divided into 3 Separate Bars Consisting of 7L (Left), 7C (Center) & 7R (Right) Based on Their Location Relative to Section A Sheet 2

2. Concrete Shall Have a Minimum 28 Days Compressive Strength of 6,000 PSI

3. Precast Sub Cap Shall be Poured in the Upright Position and Handled in the Upright Position Only Using Methods Shown on Lifting Handling Detail Located on Sheet 4

SD Ireland PRECAST DIVISION

PROJECT NAME: JAMAICA	
PROJECT NUMBER: ER-BRF 013-1(16)	
PRECAST SUB-CAP PRODUCTION DRAWING SET	
DRAWING: REBAR REINFORCING PLAN & SECTION	
DRAWN BY: CD	DATE: 01/29/13
APPROVED BY: TD	SHEET: 2 OF 4

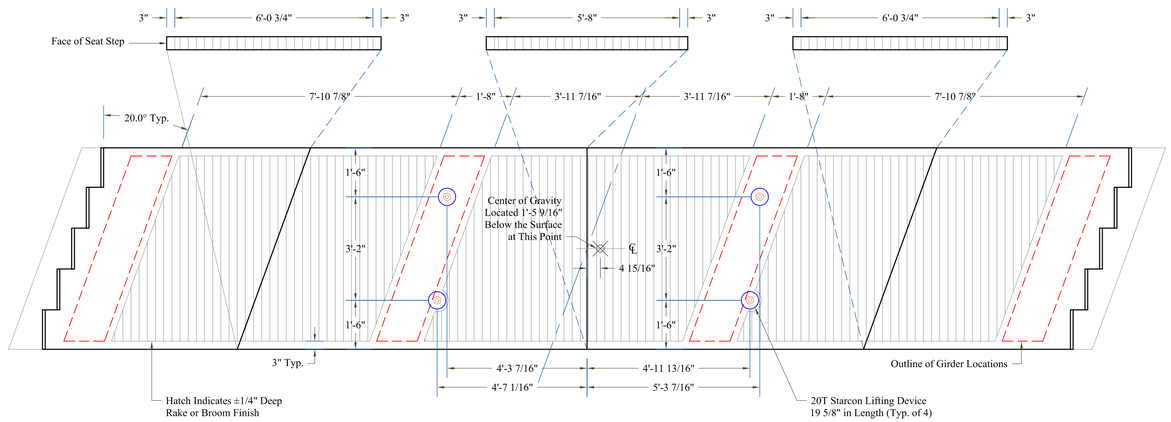

Lifting Insert & Roughened Surface Plan

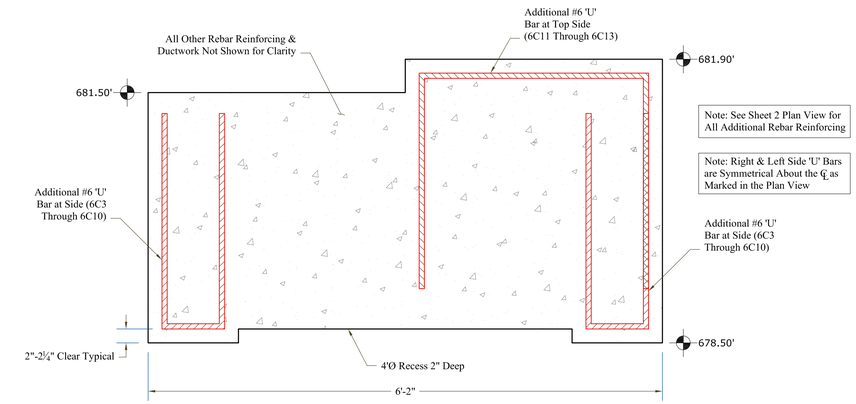

Additional Reinforcing Detail

Sheet 1

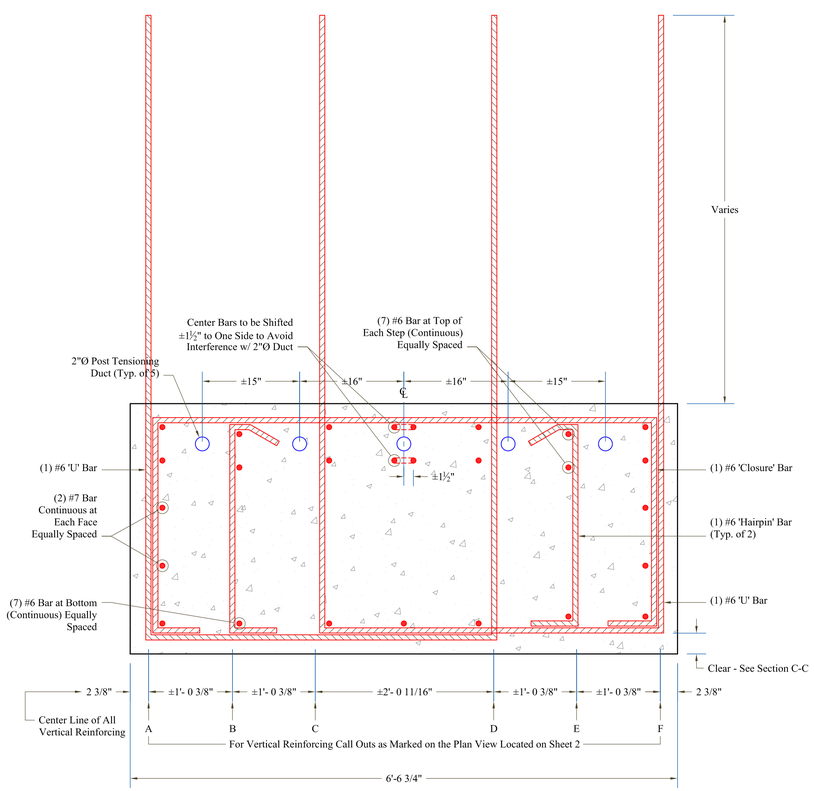

Section B-B

Sheet 2

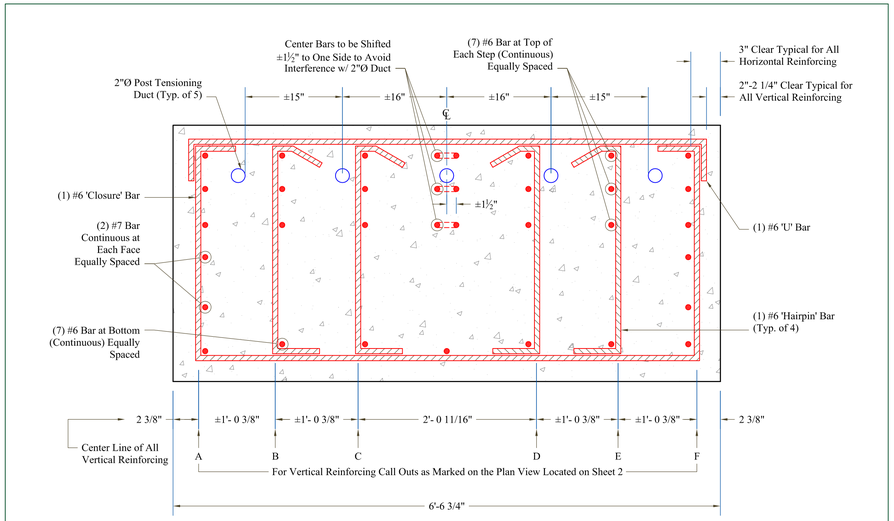

Section C-C

Sheet 2

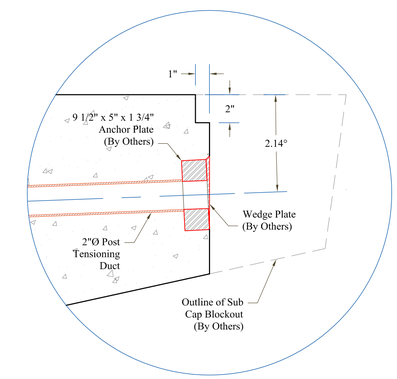

Wedge Plate Detail

Sheet 1

SD Ireland PRECAST DIVISION

PROJECT NAME: JAMAICA	
PROJECT NUMBER: ER-BRF 013-1(16)	
PRECAST SUB-CAP PRODUCTION DRAWING SET	
DRAWING: REBAR SHEDULE & FORM LINER/LIFTING DEVICE PLAN	
DRAWN BY: CD	DATE: 01/29/13
APPROVED BY: TD	SHEET: 3 OF 4

Bar List - Horizontal Reinforcing

Mark	# Total	Length	Type	A	B	C	*
6A1	1	5'-6 1/4"	1	66 1/4"			
6A2	1	5'-5"	1	65"			
6A3	1	5'-9"	1	69"			
6A4	1	5'-7 3/4"	1	67 3/4"			
6A5	1	5'-6 1/2"	1	66 1/2"			
6A6	1	5'-5 1/4"	1	65 1/4"			
6A7	1	5'-9 1/2"	1	69 1/2"			
6A8	1	16'-2"	1	194"			
6A9	2	15'-8 1/2"	1	188 1/2"			
6A10	1	15'-3 1/4"	1	183 1/4"			
6A11	1	14'-9 3/4"	1	177 3/4"			
6A12	2	14'-4 1/2"	1	172 1/2"			
6A13	7	23'-8 1/2"	1	284 1/5"			
6A14	1	28'-2 1/4"	1	338 1/4"			
6A15	1	27'-10 1/4"	1	334 1/4"			
6A16	1	27'-11 1/2"	1	335 1/2"			
6A17	1	28'-0 3/4"	1	336 3/4"			
6A18	1	28'-2"	1	338"			
6A19	1	27'-10"	1	334"			
6A20	1	27'-11 1/4"	1	335 1/4"			
6A21	8	7'-2 1/4"	3	74 1/2"	6"	6"	
7A1	2	24'-3 3/4"	1	291 3/4"			
7A2	2	15'-10 3/4"	1	190 1/4"			
6B1	1	12'-3 3/4"	1	147 3/4"			
6B2	1	12'-2 1/2"	1	146 1/2"			
6B3	1	12'-6 3/4"	1	150 3/4"			
6B4	1	12'-5 1/2"	1	149 1/2"			
6B5	1	12'-4"	1	148"			
6B6	1	12'-2 3/4"	1	146 3/4"			
6B7	1	12'-7"	1	151"			
6B8	1	12'-4 1/2"	1	148 1/2"			
6B9	1	12'-0 1/2"	1	144 1/2"			
6B10	1	12'-1 3/4"	1	145 3/4"			
6B11	1	12'-3"	1	147"			
6B12	1	12'-4 1/4"	1	148 1/4"			
6B13	1	12'-0 1/4"	1	144 1/4"			
6B14	1	12'-1 1/2"	1	145 1/2"			
6B15	2	11'-8 1/2"	2a	78 1/2"			
6B16	1	12'-0 1/2"	2b	18 3/4"	24 1/2"	35"	
6B17	1	12'-0 1/2"	2b	10 3/4"	48 3/4"	18 3/4"	
6B18	1	12'-0 1/2"	2b	12 1/4"	54"	12 1/4"	
6B19	1	12'-0 1/2"	2b	19"	48 3/4"	10 1/2"	
6B20	1	12'-0 1/2"	2b	35 1/4"	24 1/2"	18 1/2"	

Bar List - Vertical Reinforcing

Mark	# Total	Length	Type	A	B	C	*
6C1	126	20'-0"	3	50"	95"	95"	
6C2	2	14'-7"	3	50"	95"	30"	
6C3	2	6'-7 1/2"	3	17 1/2"	31"	31"	
6C4	2	6'-0 1/2"	3	10 1/2"	31"	31"	
6C5	2	5'-11 1/4"	3	9 1/4"	31"	31"	
6C6	2	6'-0"	3	10"	31"	31"	
6C7	2	6'-2 1/2"	3	12 1/2"	31"	31"	
6C8	2	6'-6 1/2"	3	16 1/2"	31"	31"	
6C9	2	7'-0 1/2"	3	22 1/2"	31"	31"	
6C10	2	8'-1"	3	35"	31"	31"	
6C11	1	6'-8"	3	18"	31"	31"	
6C12	1	8'-7 1/4"	3	41 1/4"	31"	31"	
6C13	1	10'-3 1/4"	3	61 1/4"	31"	31"	

Bar List - Vertical Reinforcing

Mark	# Total	Length	Type	A	B	C	*
6D1	1	8'-7 1/4"	4	74 1/4"	8 1/2"	8 1/2"	
6D2	1	8'-9 1/4"	4	74 1/4"	9 1/2"	9 1/2"	
6D3	1	8'-11 1/4"	4	74 1/4"	10 1/2"	10 1/2"	
6D4	1	9'-1 1/2"	4	74 1/4"	11 5/8"	11 5/8"	
6D5	1	9'-2 1/2"	4	74 1/4"	12 1/8"	12 1/8"	
6D6	1	9'-3 3/4"	4	74 1/4"	12 3/4"	12 3/4"	
6D7	1	9'-5"	4	74 1/4"	13 3/8"	13 3/8"	
6D8	1	9'-6 1/4"	4	74 1/4"	14"	14"	
6D9	1	9'-7 3/4"	4	74 1/4"	14 3/4"	14 3/4"	
6D10	1	9'-9 1/4"	4	74 1/4"	15 1/2"	15 1/2"	
6D11	1	9'-10 3/4"	4	74 1/4"	16 1/4"	16 1/4"	
6D12	1	10'-0 1/4"	4	74 1/4"	17"	17"	
6D13	1	10'-11 1/4"	4	74 1/4"	22 1/2"	22 1/2"	
6D14	1	11'-1"	4	74 1/4"	23 3/8"	23 3/8"	
6D15	2	11'-2 1/2"	4	74 1/4"	24 1/8"	24 1/8"	
6D16	1	11'-4"	4	74 1/4"	24 7/8"	24 7/8"	
6D17	1	11'-5 1/2"	4	74 1/4"	25 5/8"	25 5/8"	
6D18	1	11'-6 3/4"	4	74 1/4"	26 1/4"	26 1/4"	
6D19	1	11'-7 3/4"	4	74 1/4"	26 3/4"	26 3/4"	
6D20	1	11'-9"	4	74 1/4"	27 3/8"	27 3/8"	
6D21	1	11'-10 1/4"	4	74 1/4"	28"	28"	
6D22	1	12'-0 1/4"	4	74 1/4"	29"	29"	
6D23	1	12'-0 1/2"	4	74 1/4"	30 1/8"	30 1/8"	
6D24	1	12'-4 1/2"	4	74 1/4"	31 1/8"	31 1/8"	
6D25	1	12'-5 1/4"	4	74 1/4"	31 1/2"	31 1/2"	
6D26	3	12'-6 1/4"	4	74 1/4"	32"	32"	
6D29	6	12'-2 1/4"	4	74 1/4"	30"	30"	
6D36	2	12'-11 3/4"	4	74 1/4"	34 3/4"	34 3/4"	
6D37	3	13'-3 3/4"	4	74 1/4"	36 3/4"	36 3/4"	
6D40	1	13'-2 3/4"	4	74 1/4"	36 1/4"	36 1/4"	
6D41	1	13'-1 1/4"	4	74 1/4"	35 1/2"	35 1/2"	
6D42	1	12'-9 1/4"	4	74 1/4"	33 1/2"	33 1/2"	
6D43	1	12'-5 3/4"	4	74 1/4"	31 3/4"	31 3/4"	
6D44	1	12'-2"	4	74 1/4"	29 7/8"	29 7/8"	
6D45	1	12'-0"	4	74 1/4"	28 7/8"	28 7/8"	
6D46	1	11'-10"	4	74 1/4"	27 7/8"	27 7/8"	
6D47	1	11'-8"	4	74 1/4"	26 7/8"	26 7/8"	
6D48	1	11'-4"	4	74 1/4"	25 7/8"	25 7/8"	
6D49	1	11'-1 1/2"	4	74 1/4"	24 5/8"	24 5/8"	
6D50	1	11'-0 3/4"	4	74 1/4"	23 1/4"	23 1/4"	
6D51	1	10'-10 1/4"	4	74 1/4"	22"	22"	
6D52	1	10'-5 1/2"	4	74 1/4"	20 5/8"	20 5/8"	
6D54	1	10'-10"	4	74 1/4"	22 7/8"	22 7/8"	
6D55	1	10'-7 1/4"	4	74 1/4"	21 1/2"	21 1/2"	
6D56	1	10'-4 3/4"	4	74 1/4"	20 1/4"	20 1/4"	
6D57	1	10'-2"	4	74 1/4"	18 7/8"	18 7/8"	
6D58	1	10'-0"	4	74 1/4"	17 7/8"	17 7/8"	
6D59	1	10'-0"	4	74 1/4"	16 7/8"	16 7/8"	
6D60	1	9'-10 1/4"	4	74 1/4"	16"	16"	
6D61	1	9'-8 1/4"	4	74 1/4"	15"	15"	
6D62	1	9'-4 1/4"	4	74 1/4"	13 1/8"	13 1/8"	
6D63	1	9'-1"	4	74 1/4"	11 3/8"	11 3/8"	
6D64	1	8'-9 1/2"	4	74 1/4"	9 5/8"	9 5/8"	

Bar List - Ties

Mark	# Total	Length	Type	A	B	C	*
3F1	30	3'-4"	7	10"	6"	8"	

Bar List - Dowel Bar Subs

Mark	# Total	Length	Type	A	B	C	*
4G1	12	2'-3"	5	27"	---		

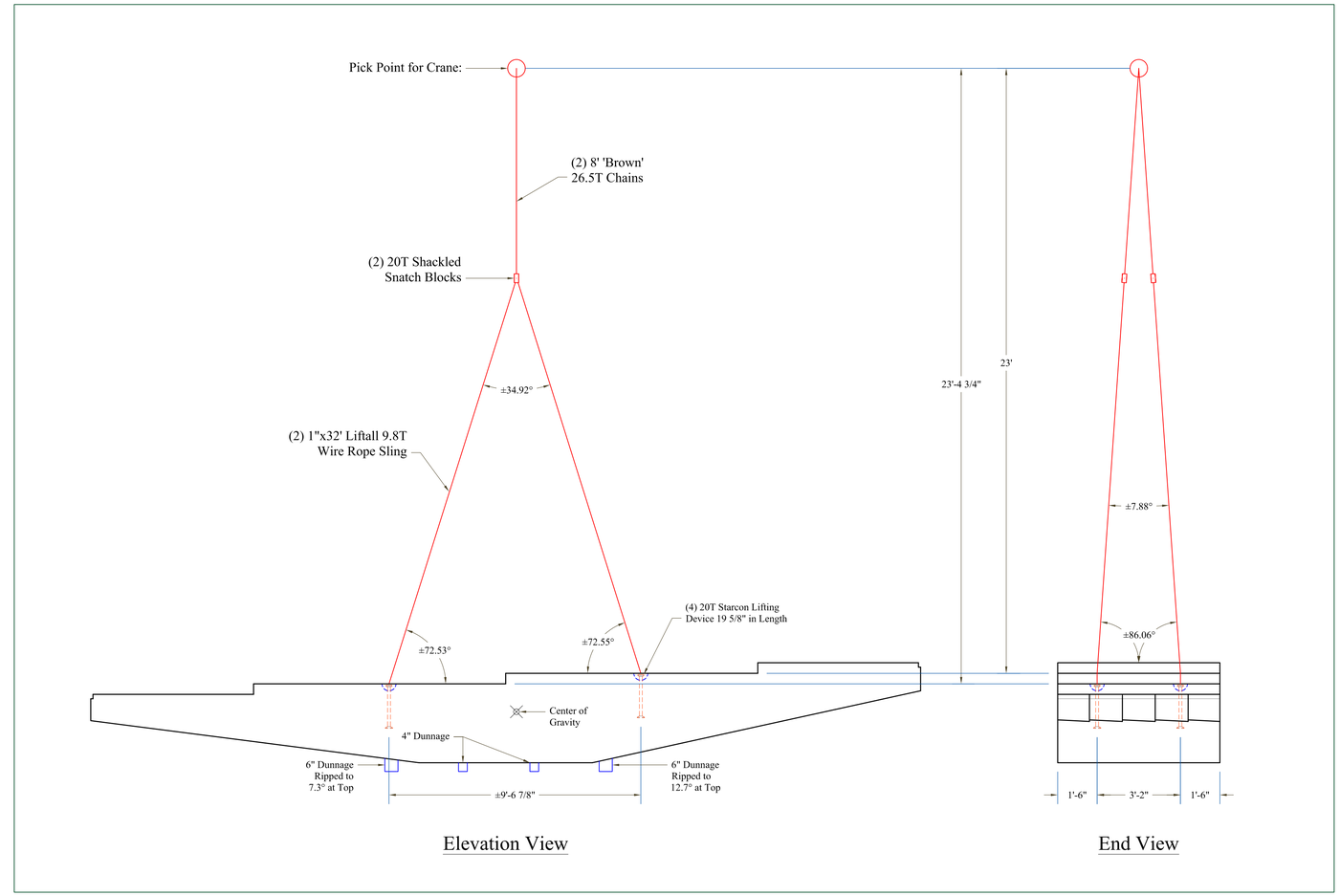

Bar List - Hairpins

Mark	# Total	Length	Type	A	*
6E1	2	1-11 1/2"	6	8 1/2"	
6E2	4	2'-0 1/2"	6	9 1/2"	
6E3	4	2'-1 1/2"	6	10 1/2"	
6E4	2	2'-2 5/8"	6	11 5/8"	
6E5	2	2'-3 1/8"	6	12 1/8"	
6E6	2	2'-3 3/4"	6	12 3/4"	
6E7	2	2'-4 3/8"	6	13 3/8"	
6E8	2	2'-5"	6	14"	
6E9	2	2'-5 3/4"	6	14 3/4"	
6E10	2	2'-6 1/2"	6	15 1/2"	
6E11	2	2'-7 1/4"	6	16 1/4"	
6E12	2	2'-8"	6	17"	
6E13	2	3'-1 1/2"	6	22 1/2"	
6E14	2	3'-2 3/8"	6	23 3/8"	

Bar List - Hairpins

Mark	# Total	Length	Type	A	*
6E15	4	3'-3 1/8"	6	24 1/8"	
6E16	2	3'-3 7/8"	6	24 7/8"	
6E17	2	3'-4 5/8"	6	25 5/8"	
6E18	2	3'-5 1/4"	6	26 1/4"	
6E19	2	3'-5 3/4"	6	26 3/4"	
6E20	2	3'-6 3/8"	6	27 3/8"	
6E21	2	3'-7"	6	28"	
6E22	4	3'-8"	6	29"	
6E23	4	3'-9 1/8"	6	30 1/8"	
6E24	2	3'-10 1/8"	6	31 1/8"	
6E25	2	3'-10 1/2"	6	31 1/2"	
6E26	6	3'-11"	6	32"	
6E29	8	3'-9"	6	30"	
6E36	8	4'-1 3/4"	6	34 3/4"	

Bar List - Hairpins

Mark	# Total	Length	Type	A	*
6E37	6	4'-3 3/4"	6	36 3/4"	
6E40	2	4'-3 1/4"	6	36 1/4"	
6E41	2	4'-2 1/2"	6	35 1/2"	
6E42	4	4'-0 1/2"	6	33 1/2"	
6E43	4	3'-10 3/4"	6	31 3/4"	
6E44	2	3'-8 7/8"	6	29 7/8"	
6E45	2	3'-7 7/8"	6	28 7/8"	
6E46	2	3'-6 7/8"	6	27 7/8"	
6E47	2	3'-5 7/8"	6	26 7/8"	
6E48	2	3'-4 7/8"	6	25 7/8"	
6E49	2	3'-3 5/8"	6	24 5/8"	
6E50	2	3'-2 1/4"	6	23 1/4"	
6E51	2	3'-1"	6	22"	
6E52	2	2'-11 5/8"	6	20 5/8"	

Bar List - Hairpins

Mark	# Total	Length	Type	A	*
6E54	2	3'-1 7/8"	6	22 7/8"	
6E55	2	3'-0 1/2"	6	21 1/2"	
6E56	2	2'-11 1/4"	6	20 1/4"	
6E57	2	2'-9 7/8"	6	18 7/8"	
6E58	2	2'-8 7/8"	6	17 7/8"	
6E59	2	2'-7 7/8"	6	16 7/8"	
6E60	2	2'-7"	6	16"	
6E61	2	2'-6"	6	15"	
6E62	4	2'-4 1/8"	6	13 1/8"	
6E63	4	2'-2 3/8"	6	11 3/8"	
6E64	2	2'-0 5/8"	6	9 5/8"	

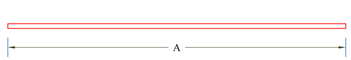

Type 1

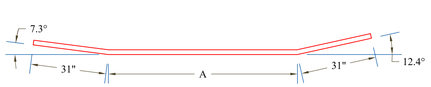

Type 2a

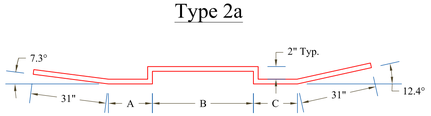

Type 2b

Type 3

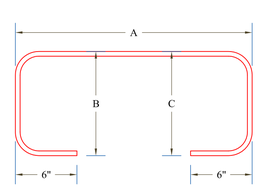

Type 4

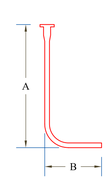

Type 5

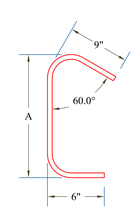

Type 6

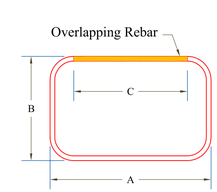

Type 7

Notes:
Rebar Tolerance: +0" -1/4"

SD Ireland PRECAST DIVISION

PROJECT NAME: JAMAICA	
PROJECT NUMBER: ER-BRF 013-1(16)	
PRECAST SUB-CAP PRODUCTION DRAWING SET	
DRAWING: REBAR SHEDULE & LIFTING/HANDLING NOTES	
DRAWN BY: CD	DATE: 01/29/13
APPROVED BY: TD	SHEET: 4 OF 4

STARCON LIFTING ANCHORS

Safety factor approximately 4:1
Anchors available hot-dipped galvanized

Product	Ton	Anchor Head Mark	Length IN	Length mm	Dimensions (mm) d	d1	d2	Weight kg
09-1010350	1	1.3	1 3/8"	35mm	10	19	25	0.05
09-1010400	1	1.3	1 1/2"	40mm	10	19	25	0.05
09-1010450	1	1.3	1 3/4"	45mm	10	19	25	0.06
09-1010500	1	1.3	2"	50mm	10	19	25	0.06
09-1010550	1	1.3	2 1/4"	55mm	10	19	25	0.07
09-1010650	1	1.3	2 1/2"	65mm	10	19	25	0.07
09-1010850	1	1.3	3 3/8"	85mm	10	19	25	0.08
09-1010200	1	1.3	4 3/4"	120mm	10	19	25	0.01
09-1012400	1	1.3	9 1/2"	240mm	10	19	25	0.17

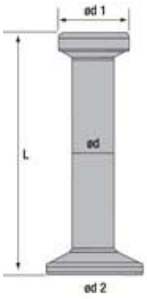

Product	Ton	Anchor Head Mark	Length IN	Length mm	Dimensions (mm) d	d1	d2	Weight kg
09-1030450	2	2.5	1 3/4"	45mm	14	26	35	0.12
09-1030550	2	2.5	2 1/4"	55mm	14	26	35	0.13
09-1030600	2	2.5	2 3/8"	60mm	14	26	35	0.14
09-1030680	2	2.5	2 5/8"	68mm	14	26	35	0.15
09-1030750	2	2.5	3"	75mm	14	26	35	0.16
09-1030850	2	2.5	3 3/8"	85mm	14	26	35	0.17
09-1031000	2	2.5	4"	100mm	14	26	35	0.17
09-1031100	2	2.5	4 3/8"	110mm	14	26	35	0.18
09-1031200	2	2.5	4 3/4"	120mm	14	26	35	0.19
09-1031400	2	2.5	5 1/2"	140mm	14	26	35	0.21
09-1031700	2	2.5	6 3/4"	170mm	14	26	35	0.23
09-1032800	2	2.5	11"	280mm	14	26	35	0.27

Product	Ton	Anchor Head Mark	Length IN	Length mm	Dimensions (mm) d	d1	d2	Weight kg
09-1050650	4	5.0	2 3/8"	65mm	20	36	50	0.32
09-1050750	4	5.0	3"	75mm	20	36	50	0.34
09-1050850	4	5.0	3 3/8"	85mm	20	36	50	0.36
09-1050950	4	5.0	3 3/4"	95mm	20	36	50	0.4
09-1051100	4	5.0	4 3/8"	110mm	20	36	50	0.43
09-1051200	4	5.0	4 3/4"	120mm	20	36	50	0.46
09-1051400	4	5.0	5 1/2"	140mm	20	36	50	0.49
09-1051600	4	5.0	6 3/8"	160mm	20	36	50	0.56
09-1051800	4	5.0	7 1/8"	180mm	20	36	50	0.61
09-1052100	4	5.0	8 1/4"	210mm	20	36	50	0.69
09-1052400	4	5.0	9 1/2"	240mm	20	36	50	0.76
09-1053400	4	5.0	13 3/8"	340mm	20	36	50	1.01
09-1054800	4	5.0	18 7/8"	480mm	20	36	50	1.36

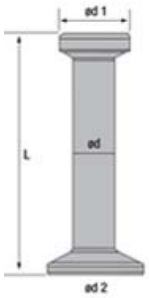

Product	Ton	Anchor Head Mark	Length IN	Length mm	Dimensions (mm) d	d1	d2	Weight kg
09-1070850	6	7.5	3 3/8"	85mm	24	47	60	0.58
09-1070950	6	7.5	3 3/4"	95mm	24	47	60	0.64
09-1071200	6	7.5	4 3/4"	120mm	24	47	60	0.73
09-1071400	6	7.5	5 1/2"	140mm	24	47	60	0.81
09-1071650	6	7.5	6 1/2"	165mm	24	47	60	0.89
09-1072000	6	7.5	7 7/8"	200mm	24	47	60	1.01
09-1073000	6	7.5	11 7/8"	300mm	24	47	60	1.36
09-1075400	6	7.5	21 1/4"	540mm	24	47	60	2.24
09-1076800	6	7.5	26 3/4"	680mm	24	47	60	2.6

Product	Ton	Anchor Head Mark	Length IN	Length mm	Dimensions (mm) d	d1	d2	Weight kg
09-1100950	8	10.0	3 3/4"	95mm	28	47	70	0.87
09-1101150	8	10.0	4 1/2"	115mm	28	47	70	0.9
09-1101200	8	10.0	4 3/4"	120mm	28	47	70	0.93
09-1101350	8	10.0	5 3/8"	135mm	28	47	70	1.03
09-1101500	8	10.0	5 7/8"	150mm	28	47	70	1.09
09-1101700	8	10.0	6 3/4"	170mm	28	47	70	1.18
09-1102200	8	10.0	8 3/4"	220mm	28	47	70	1.44
09-1102500	8	10.0	9 3/4"	250mm	28	47	70	1.56
09-1103400	8	10.0	13 3/8"	340mm	28	47	70	1.98
09-1106800	8	10.0	26 3/4"	680mm	28	47	70	3.57

Product	Ton	Anchor Head Mark	Length IN	Length mm	Dimensions (mm) d	d1	d2	Weight kg
09-1151550	12	15.0	6 1/8"	155mm	34	70	85	1.9
09-1151650	12	15.0	6 1/2"	165mm	34	70	85	1.97
09-1152000	12	15.0	7 7/8"	200mm	34	70	85	2.21
09-1153000	12	15.0	11 7/8"	300mm	34	70	85	2.91
09-1154000	12	15.0	15 3/4"	400mm	34	70	85	3.59
09-1201650	16	20.0	6 1/2"	165mm	39	70	98	2.52
09-1202000	16	20.0	7 7/8"	200mm	39	70	98	3.05
09-1202500	16	20.0	9 3/4"	250mm	39	70	98	3.3
09-1203400	16	20.0	13 3/8"	340mm	39	70	98	4.38
09-1205000	16	20.0	19 5/8"	500mm	39	70	98	5.87
09-1210000	16	20.0	39 3/8"	1000mm	39	70	98	11.75

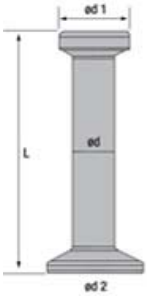

Safety factor approximately 4:1

Anchors available hot-dipped galvanized

Also available:

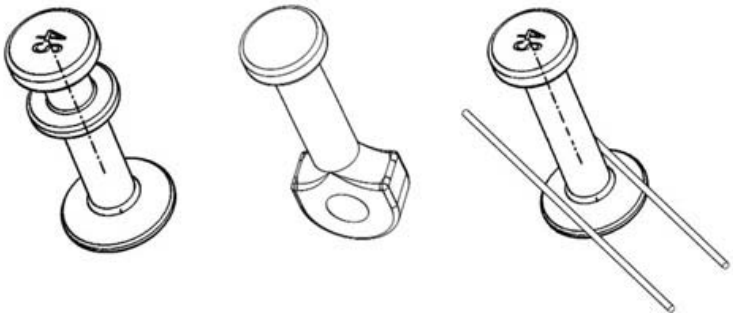

BACK TO TOP

Designation: A1055/A1055M – 10$^{\varepsilon 1}$

Standard Specification for Zinc and Epoxy Dual-Coated Steel Reinforcing Bars[1]

This standard is issued under the fixed designation A1055/A1055M; the number immediately following the designation indicates the year of original adoption or, in the case of revision, the year of last revision. A number in parentheses indicates the year of last reapproval. A superscript epsilon (ε) indicates an editorial change since the last revision or reapproval.

ε^1 NOTE—Mathematical corrections to A1.3.8 were made in December 2011.

1. Scope*

1.1 This specification covers deformed and plain steel reinforcing bars with a dual coating of zinc alloy and an epoxy coating. The zinc-alloy layer is applied by the thermal spray coating method (metallizing) followed by an epoxy coating applied by the electrostatic spray method.

NOTE 1—The coating applicator is identified throughout this specification as the manufacturer.

1.2 Requirements of the zinc coating are contained in Table 1.

1.3 Requirements for fusion-bonded powder coatings are contained in Annex A1.

1.4 Guidelines for construction practices at the job-site are presented in Appendix X1.

1.5 This specification is applicable for orders in either inch-pound or SI units.

1.6 The values stated in either inch-pound units or SI units are to be regarded as standard. Within the text, the SI units are shown in brackets. The values stated in each system are not exact equivalents; therefore, each system must be used independently of the other, except as specifically noted in Table 2. Combining values from the two systems may result in nonconformance with this specification.

1.7 *This standard does not purport to address all of the safety concerns, if any, associated with its use. It is the responsibility of the user of this standard to establish appropriate safety and health practices and determine the applicability of regulatory limitations prior to use.*

2. Referenced Documents

2.1 *ASTM Standards:*[2]

A615/A615M Specification for Deformed and Plain Carbon-Steel Bars for Concrete Reinforcement

A706/A706M Specification for Low-Alloy Steel Deformed and Plain Bars for Concrete Reinforcement

A944 Test Method for Comparing Bond Strength of Steel Reinforcing Bars to Concrete Using Beam-End Specimens

A996/A996M Specification for Rail-Steel and Axle-Steel Deformed Bars for Concrete Reinforcement

B117 Practice for Operating Salt Spray (Fog) Apparatus

B833 Specification for Zinc and Zinc Alloy Wire for Thermal Spraying (Metallizing) for the Corrosion Protection of Steel

D4060 Test Method for Abrasion Resistance of Organic Coatings by the Taber Abraser

E29 Practice for Using Significant Digits in Test Data to Determine Conformance with Specifications

E527 Practice for Numbering Metals and Alloys in the Unified Numbering System (UNS)

G8 Test Methods for Cathodic Disbonding of Pipeline Coatings

G14 Test Method for Impact Resistance of Pipeline Coatings (Falling Weight Test)

G20 Test Method for Chemical Resistance of Pipeline Coatings

G62 Test Methods for Holiday Detection in Pipeline Coatings

2.2 *American Welding Society:*[3]

ANSI/AWS A5.33 Specification for Solid and Ceramic Wires and Ceramic Rods for Thermal Spraying

AWS C2.23M/C2.23 Specification for the Application of Thermal Spray Coatings (Metallizing) of Aluminum, Zinc, and Their Alloys and Composites for the Corrosion Protection for Steel

AWS C2.25/C2.25M Specification for Thermal Spray Feedstock—Solid and Composite Wire and Ceramic Rods

2.3 *NACE International Standard:*[4]

RP-287 Field Measurement of Surface Profile of Abrasive

[1] This specification is under the jurisdiction of ASTM Committee A01 on Steel, Stainless Steel and Related Alloys and is the direct responsibility of Subcommittee A01.05 on Steel Reinforcement.

Current edition approved Dec. 1, 2010. Published December 2010. Originally approved in 2008. Last previous edition approved in 2008 as A1055 – 08a$^{\varepsilon 1}$. DOI: 10.1520/A1055_A1055M-10E01.

[2] For referenced ASTM standards, visit the ASTM website, www.astm.org, or contact ASTM Customer Service at service@astm.org. For *Annual Book of ASTM Standards* volume information, refer to the standard's Document Summary page on the ASTM website.

[3] Available from American Welding Society (AWS), 550 NW LeJeune Rd., Miami, FL 33126, http://www.aws.org.

[4] Available from National Association of Corrosion Engineers (NACE), 1440 South Creek Dr., Houston, TX 77084-4906, http://www.nace.org.

***A Summary of Changes section appears at the end of this standard.**

Copyright © ASTM International, 100 Barr Harbor Drive, PO Box C700, West Conshohocken, PA 19428-2959, United States.

Copyright by ASTM Int'l (all rights reserved); Tue Jan 17 11:34:18 EST 2012
Downloaded/printed by
Wes Miller (Gerdau+Knoxville+ZBAR) pursuant to License Agreement. No further reproductions authorized.

TABLE 1 Chemical Composition Requirements for Zinc and Zinc-Alloy Wires

Common Name (UNS)[A]	Al, max unless noted	Cd, max	Cu, max	Fe, max	Pb, max	Sn, max	Sb, max	Ag, max	Bi, max	As, max	Ni, max	Mg, max	Mo, max	Ti, max	Zn, min	Other, Total max
99.99 Zinc[B] (Z13005)	0.002[C]	0.003	0.005	0.003	0.003	0.001	…[D]	…	…	…	…	…	…	…	99.99	…
99.99 Zinc[B] (Z15005)	0.01	0.02	0.02	0.02	0.03	…	…	…	…	…	…	…	…	…	99.9	0.10 total non-Zn
99.995 Zinc (…)[E]	0.001	0.003	0.001	0.002	0.003	0.003	…	…	…	…	…	…	…	…	99.995	0.005
99.95 Zinc (…)	0.01	0.02	0.001	0.02	0.03	0.001	…	…	…	…	…	…	…	…	99.95	0.050
99.95 Zinc (…)	0.01	0.005	0.7	0.01	0.005	0.001	…	…	…	…	…	0.01	0.01	0.18	99	1.0
98Zn/2Al (Z30402)	1.5-2.5	0.005	0.005	0.02	0.005	0.003	0.10	0.015	0.02	0.002	0.005	0.02	…	…	remainder	…

[A] UNS designations were established in accordance with Practice E527.
[B] In accordance with ANSI/AWS A5.33.
[C] The following applies to all specified limits in this table. For the purposes of determining conformance with this specification, an observed value obtained from analysis shall be rounded off to the nearest unit in the last right-hand place of figures used in expressing the limiting value, in accordance with the rounding method of Practice E29.
[D] … indicates that the element is not applicable.
[E] (…) indicates no Unified Numbering System (UNS) designation for this option.

TABLE 2 Bend Test Requirements

A615, A706, or A996		A615M, A706M, or A996M		Bend Angle (After Rebound, degrees)	Time to Completion max, s
Bar No.	Mandrel Diameter in.[A]	Bar No.	Mandrel Diameter mm[A]		
3	3	10	75	180	15
4	4	13	100	180	15
5	5	16	125	180	15
6	6	19	150	180	15
7	7	22	175	180	45
8	8	25	200	180	45
9	9	29	230	180	45
10	10	32	250	180	45
11	11	36	280	180	45
14	17	43	430	90	45
18	23	57	580	90	45

[A] Mandrel diameters specified for similar size (shown on the same line) inch-pound bars and metric may be interchanged.

Blast-Cleaned Steel Surface Using a Replica Tape

2.4 *Society for Protective Coatings Specifications:*[5]

SSPC-PA 2 Measurement of Dry Coating Thickness with Magnetic Gages

SSPC-SP 10 Near-White Blast Cleaning

SSPC-VIS 1 Pictorial Surface Preparation standards for Painting Steel Surfaces

2.5 *Concrete Reinforcing Steel Institute:*[6]

Voluntary Certification Program for Fusion Bonded Epoxy Coating Applicator Plants

2.6 *American Concrete Institute Standard:*[7]

ACI 301 Specifications for Structural Concrete

3. Terminology

3.1 *Definitions of Terms Specific to This Standard:*

3.1.1 *disbonding*, *n*—loss of adhesion between the fusion-bonded powder coating and the zinc-coated steel reinforcing bar.

3.1.2 *fusion-bonded powder coating*, *n*—a product containing pigments, thermosetting resins, cross-linking agents, and other additives, which is applied in the form of a powder onto a clean, heated metallic substrate and fused to form a continuous barrier coating.

3.1.3 *holiday*, *n*—a discontinuity in a coating that is not discernible to a person with normal or corrected vision.

3.1.4 *patching material*, *n*—a liquid two-part, epoxy coating used to repair damaged or uncoated areas.

3.1.5 *thermal spray coating (metallizing)*, *n*—a zinc and zinc alloy, or both, wire used in depositing a metallized layer of zinc by thermal spraying (metallizing) using oxy-fuel or electric-arc thermal spraying which is applied onto a clean, heated metallic substrate to form a continuous coating.

3.1.6 *wetting agent*, *n*—a material that lowers the surface tension of water allowing it to penetrate more effectively into small discontinuities in the coating giving a more accurate indication of the holiday count.

4. Ordering Information

4.1 It shall be the responsibility of the purchaser to specify all requirements that are necessary for the coated steel reinforcing bars under this specification. Such requirements to be considered include but are not limited to the following:

4.1.1 Reinforcing bar specification and year of issue,

4.1.2 Quantity of bars,

4.1.3 Size and grade of bars,

4.1.4 Requirements for the zinc coating (5.2),

4.1.5 Requirements for the powder coating and provision of test data (5.3 and 5.4),

4.1.6 Requirements for patching material (5.5),

4.1.7 Quantity of patching material,

4.1.8 Specific requirements for test frequency (9.1),

4.1.9 Whether a report on tests performed on the coated steel reinforcing bars being furnished is required (8.4.1 and Section 14),

[5] Available from Society for Protective Coatings (SSPC), 40 24th St., 6th Floor, Pittsburgh, PA 15222-4656, http://www.sspc.org.

[6] Available from Concrete Reinforcing Steel Institute (CRSI), 933 North Plum Grove Rd., Schaumburg, IL 60173-4767, http://www.crsi.org.

[7] Available from American Concrete Institute (ACI), P.O. Box 9094, Farmington Hills, MI 48333-9094, http://www.aci-int.org.

Copyright by ASTM Int'l (all rights reserved); Tue Jan 17 11:34:18 EST 2012
Downloaded/printed by
Wes Miller (Gerdau+Knoxville+ZBAR) pursuant to License Agreement. No further reproductions authorized.

4.1.10 Additional specimens to be provided to the purchaser for testing from the coated steel reinforcing bars being furnished (12.1), and

4.1.11 Manufacturer qualification and certification requirements (if any).

NOTE 2—It is recommended that the coating application procedures and processes be audited by an independent certification program for coating applicator plants such as that provided by the Voluntary Certification Program or equivalent.

5. Materials

5.1 Steel reinforcing bars to be coated shall meet the requirements of one of the following specifications: A615M, A706M, or A996M [A615, A706, or A996] as specified by the purchaser and shall be free of contaminates such as oil, grease, or paint.

NOTE 3—Prior to coating, the steel reinforcing bars should be inspected for their suitability for coating. Bars with sharp edges on the deformations, rolled-in slivers, or other surface imperfections are difficult to coat properly and should not be coated. The coating will flow away from the sharp edges and may result in inadequate coating thickness at these points.

5.2 *Zinc-Alloy Wire*:

5.2.1 The thermal spray coating feedstock material shall be specified according to Specification B833 or to AWS C2.25/C2.25M.

5.2.2 The wire shall conform to one of the chemical composition requirements prescribed in Table 1.

5.2.3 The wire shall be clean and free of corrosion, adhering foreign material, scale, seams, nicks, burrs, and other defects which would interfere with the operation of thermal spraying equipment. The wire shall uncoil readily and be free of bends or kinks that would prevent its passage through the thermal spray gun.

5.2.4 The wire shall be a continuous length per spool, coil, or drum. Splices or welds are permitted, provided that they do not interfere with the thermal spray equipment or coating process.

5.2.5 The starting end of each coil shall be tagged to indicate winding direction and to be readily identifiable with ASTM designation.

5.3 *Powder Coating*:

5.3.1 The powder coating shall meet the requirements of Annex A1. Upon request, the purchaser shall be provided with the test report for review.

5.3.2 A written certification shall be furnished to the purchaser that properly identifies the number of each lot of powder coating used in the order material quantity represented, date manufacture, name and address of the powder coating manufacturer, and a statement that the supplied powder coating is the same composition as that qualified according to Annex A1 of this specification.

5.3.3 The powder coating shall be stored in a temperature-controlled environment following the written recommendations of the powder coating manufacturer until ready for use. At that point, if the storage temperature is below the plant ambient temperature, the powder coating shall be given sufficient time to reach approximate plant ambient temperature. The powder coating shall be used within the powder coating manufacturer's written recommended shelf life.

5.4 If specified in the order, a representative 8-oz [0.2-kg] sample of the powder coating shall be supplied to the purchaser from each batch. The sample shall be packaged in an airtight container and identified by batch number.

5.5 If specified in the order, patching material compatible with the coating, inert in concrete, and approved by the powder coating manufacturer, shall be supplied to the purchaser.

6. Surface Preparation

6.1 The surface of the steel reinforcing bars to be coated shall be cleaned by abrasive blast cleaning to near-white metal in accordance with SSPC-SP 10. The following visual standard of comparison may be used to define the final surface condition: SSPC-VIS 1. Average blast profile maximum roughness depth readings of 1.5 to 4.0 mils [0.04 to 0.10 mm] as determined by replica tape measurements using NACE RP-287, shall be considered suitable as an anchor pattern.

NOTE 4—The use of a "profilometer"-type surface measurement instrument that measures the peak count as well as the maximum profile depth is recommended.

NOTE 5—Abrasive blast cleaning of steel reinforcing bars with a high degree (>90 %) of grit in the cleaning media provides the most suitable anchor profile for coating adhesion. After grit has been recycled, a small portion will take on the appearance of shot.

6.2 Multidirectional, high-pressure dry air knives shall be used after blasting to remove dust, grit, and other foreign matter from the blast-cleaned steel surface. The air knives shall not deposit oil on the steel reinforcing bars.

NOTE 6—It is recommended that incoming steel reinforcing bars and blast media be checked for salt contamination prior to use. Blast media found to be salt contaminated should be rejected. Steel reinforcing bars found to be salt contaminated from exposure to deicing salts or salt spray should be cleaned by acid washing or other suitable methods to remove salt contaminants from the surface prior to blast cleaning.

7. Coating Application

7.1 A thin zinc-alloy layer shall be applied by a thermal arc spray (metallization) system directly after the blast cleaning and before the powder coating in accordance with AWS C2.23M/C2.23 and the written specification of the zinc alloy supplier.

7.1.1 Thermal spray equipment shall be set up, calibrated, and operated according to the manufacturer's instructions and technical manuals or the Thermal Coating Spray applicator's recommendation.

7.2 The zinc-alloy coating shall be applied to the cleaned steel reinforcing bar surface as soon as possible after the bar has been cleaned and before visible oxidation of the surface occurs as discernible to a person with normal or corrected vision. In no case shall application of the coating be delayed more than 30 minutes after cleaning.

7.3 The fusion-bonded epoxy powder coating shall be applied in accordance with the written recommendations of the manufacturer of the powder coating for initial steel surface temperature range and post application curing requirements. During continuous operations, the temperature of the surface immediately prior to coating shall be measured using infrared

Copyright by ASTM Int'l (all rights reserved); Tue Jan 17 11:34:18 EST 2012
Downloaded/printed by
Wes Miller (Gerdau+Knoxville+ZBAR) pursuant to License Agreement. No further reproductions authorized.

guns or temperature indicating crayons, or both, at least once every 30 minutes. At no time shall the temperature of the bar exceed 700°F [334°C].

NOTE 7—The use of both infrared and temperature-indicating crayon measurement of the steel reinforcing bars is recommended.

7.4 The powder coating shall be applied by electrostatic spray or other suitable method.

8. Requirements for Coated Steel Reinforcing Bars

8.1 *Coating Thickness*:

8.1.1 The coating thickness of the zinc layer shall be a minimum of 1.4 mils [35 µm].

8.1.2 The total coating thickness measurements of the combined zinc-alloy layer and the epoxy coating layer after curing shall be 7 to 12 mils [175 to 300 µm] for bars sizes Nos. 3 to 5 [Nos. 10 to 16] and 7 to 16 mils [175 to 400 µm] for bar sizes Nos. 6 to 18 [Nos. 19 to 57]. The upper thickness limit shall not apply to repaired areas of damaged coating.

8.1.3 Coating thicknesses shall be measured and recorded for both zinc and epoxy thickness. A single recorded steel reinforcing bar coating thickness measurement is the average of three individual gage readings obtained between four consecutive deformations. A minimum of five recorded measurements shall be taken approximately evenly spaced along each side of the test specimens (a minimum of ten recorded measurements per bar).

NOTE 8—The zinc thickness will be measured by either using a bar that has only the zinc coating applied or by use of a duplex measuring device capable of reading the zinc and epoxy coatings simultaneously.

8.1.4 For acceptance purposes, the average of all recorded coating thickness measurements shall not be less than the specified minimum thickness or more than the specified maximum thickness. No single recorded coating thickness measurement shall be less than 80 % of the specified minimum thickness or more than 120 % of the specified maximum thickness.

8.1.5 Thickness measurements shall be made in accordance with SSPC-PA-2 and in accordance with the manufacturer's instructions for the measuring device, following the instructions for calibration and use recommended by the thickness gage manufacturer. "Pencil-type" pull-off gages that require the operator to observe the reading at the instant the magnet is pulled from the surface shall not be used.

8.1.6 The coating thickness shall be measured on the body of a straight length of steel reinforcing bar between the deformations.

8.2 *Coating Continuity*:

8.2.1 The zinc coating shall be uniform without blisters, cracks, loose particles, or exposed steel as examined with 10× magnification.

8.2.2 The manufacturer's plant shall have an operational in-line 67.5 V, 80 000 Ω wet-sponge type direct-current holiday detector or equivalent method with an automated holiday counting system to determine the epoxy coating acceptability of the steel reinforcing bars prior to shipment.

NOTE 9—Hand-held holiday detector checks should be performed each production day to verify the accuracy of the in-line system. Hand-held holiday detectors offer a reliable way to correlate data obtained from the in-line holiday-detection system.

8.2.3 On average, there shall not be more than one holiday per foot [three holidays per metre] on a coated steel reinforcing bar. The average applies to the full production length of a bar.

8.2.4 A wetting agent shall be used in accordance with Test Methods G62 in the inspection for holidays on the coated steel reinforcing bars.

8.3 *Epoxy Coating Flexibility*:

8.3.1 The epoxy coating flexibility shall be evaluated by bending production coated steel reinforcing bars (with both the alloy zinc and the powder coating applied) at a uniform rate around a mandrel of specified size within a maximum specified time period as prescribed in Table 2. The two longitudinal ribs shall be placed in a plane perpendicular to the mandrel radius. The test specimens shall be between 158 and 176°F [70 and 80°C].

8.3.2 Cracking or disbonding of the coating on the outside radius of the bent bar visible to a person with normal or corrected vision shall be considered cause for rejection of the coated steel reinforcing bars represented by the bend test sample.

NOTE 10—The qualification requirements for coating flexibility (see A1.3.5.1) prescribe bending a No. 6 [No. 19] deformed bar around a 6-in. [150-mm] diameter mandrel. The bend test requirements in Table 2 for evaluating the coating flexibility of production-coated steel reinforcing bars, for bar sizes Nos. 3 to 8 [Nos. 10 to 25], are not compatible with fabrication bending practices. Finished bend diameters for bar sizes Nos. 3 to 8 [Nos. 10 to 25] used in actual construction are smaller than the mandrel diameters in Table 2. Thus, the finished bends of production-coated bars, particularly the smaller bar sizes used for stirrups and ties, should be examined closely for hairline cracking on the outside radius of the bent bar. If hairline cracking is present, it should be repaired with patching material. To minimize the potential for damaging the coating, bending should be performed within the prescribed temperature range of 158 and 176°F [70 and 80°C].

8.3.3 A test in which fracture or partial failure of the steel reinforcing bar, or cracking or disbonding caused by imperfections in the bar surface visible after performing the bend test occurs, shall be considered an invalid test and the test shall be repeated on a new specimen.

8.4 *Coating Adhesion*:

8.4.1 Coating adhesion shall be evaluated by testing production coated steel reinforcing bars according to the cathodic disbondment procedure described in A1.3.2.1. Data from testing pertaining to the coated steel reinforcing bars being furnished shall be made available to the purchaser upon request.

NOTE 11—It is recommended that the manufacturer retain test specimens for 30 days of production and use a 30-day rolling average of coating disbondment test data as a basis for its statistical process control program for the steel reinforcing bar coating operation.

8.5 The requirements for coated steel reinforcing bars shall be met at the manufacturer's plant prior to shipment.

9. Number of Tests

9.1 The purchaser shall have the option to specify the sampling and test schedule for the number and frequency of tests for coating thickness, continuity, flexibility and adhesion.

Copyright by ASTM Int'l (all rights reserved); Tue Jan 17 11:34:18 EST 2012
Downloaded/printed by
Wes Miller (Gerdau+Knoxville+ZBAR) pursuant to License Agreement. No further reproductions authorized.

9.2 If the number and frequency of tests are not specified by the purchaser the following shall apply:

9.2.1 Tests for the zinc and epoxy coating thickness shall be made on a minimum of two bars of each size every two production hours.

9.2.2 Bend tests for coating flexibility shall be conducted on at least one bar of each size every four production hours.

9.3 Coating adhesion as measured by cathodic disbondment testing shall be conducted on at least one bar every eight production hours.

NOTE 12—The coated steel reinforcing bars to be tested for coating adhesion should be selected from the bar sizes being coated and from positions on the production line so as to be representative of the overall coating process.

10. Retests

10.1 If the specimen for coating thickness or flexibility fails to meet the specified requirements, two retests on random samples shall be conducted for each failed test. If the results of both retests meet the specified requirements, the coated steel reinforcing bars represented by the samples shall be accepted.

11. Permissible Amount of Damaged Epoxy Coating and Repair of Damaged Epoxy Coating

11.1 The maximum amount of repaired damaged epoxy coating shall not exceed 1 % of the total surface area in each 1 ft [0.3 m] of the bar. This limit on repaired damaged epoxy coating shall not include sheared or cut ends that are coated with patching material (see 11.4).

11.2 All damaged epoxy coating due to fabrication or handling (to the point of shipment) shall be repaired with patching material.

NOTE 13—If the amount of repaired damaged epoxy coating in any 1-ft [0.3-m] length of a coated bar exceeds 1 %, that section should be removed from the coated steel reinforcing bar and discarded. In patching damaged epoxy coating, care should be taken not to apply the patching material over an excessive area of the intact coating during the repair process. Too large an area of thick patching material especially on smaller-size reinforcing bars is likely to cause a reduction in bond strength of the bars to concrete.

11.3 Repaired areas shall have a minimum coating thickness of 7 mils [175 μm].

11.4 When coated bars are sheared, saw-cut or cut by other means during the fabrication process, the cut ends shall be coated with patching material. Coated steel reinforcing bars shall not be flame cut.

11.5 Repair of damaged epoxy coating shall be done in accordance with the patching material manufacturer's written recommendations.

12. Inspection

12.1 The inspector representing the purchaser shall have free entry at all times to the parts of the manufacturer's coating line that concern the manufacture of the coated steel reinforcing bars ordered. The manufacturer shall afford the inspector all reasonable facilities to satisfy the inspector that the coated steel reinforcing bars are being furnished in accordance with this specification. All tests and inspection shall be made at the place of manufacture prior to shipment, unless otherwise specified, and shall be so conducted as not to interfere unnecessarily with the operation of the coating line. At a mutually agreed upon frequency, the purchaser or the purchaser's representative shall be permitted to take lengths of coated steel reinforcing bar from the production run for testing.

13. Rejection

13.1 Coated steel reinforcing bars represented by test specimens that do not meet the requirements of this specification shall be rejected and marked with contrasting color paint or other suitable identification. At the manufacturer's option, the affected lot shall be replaced or, alternatively, stripped of coating, recleaned, recoated, and resubmitted for acceptance testing in accordance with the requirements of this specification. (A lot shall consist of all of the bars produced since the time of the last test inspection.)

NOTE 14—If the coating is not to be stripped from the rejected steel reinforcing bars, the bars should be scrapped or with the purchaser's approval used as uncoated steel reinforcing bars.

14. Certification

14.1 The purchaser shall be furnished with, at the time of shipment, written certification that samples representing each lot of coated steel reinforcing bars have been either tested or inspected as directed in this specification and the requirements have been met. When specified in the purchase order or contract, a report of the test results shall be furnished.

14.2 A material test report, certificate of inspection, or similar document printed from or used in electronic form from an electronic data interchange (EDI) transmission shall be regarded as having the same validity as a counterpart printed in the certifier's facility. The content of the EDI transmitted document must meet the requirements of the invoked ASTM standard(s) and conform to any EDI agreement between the purchaser and the supplier. Notwithstanding the absence of a signature, the organization submitting the EDI transmission is responsible for the content of the report.

NOTE 15—The industry definition invoked here is: EDI is the computer to computer exchange of business information in a standard format such as ANSI ASC X12.

15. Handling and Identification

15.1 All systems for handling coated steel reinforcing bars shall have padded contact areas. All bundling bands shall be padded or suitable banding shall be used to prevent damage to the coating. All bundles of coated steel reinforcing bars shall be lifted with a strong back, spreader bar, multiple supports, or a platform bridge to prevent bar-to-bar abrasion from sages in the bundles of coated steel reinforcing bars. The bars or bundles shall not be dropped or dragged.

15.2 If circumstances require storing coated steel reinforcing bars outdoors for more than two months, protective storage measure shall be implemented to protect the material from sunlight, salt spray and weather exposure. If the manufacturer stores coated steel reinforcing bars outdoors without protective covering, the date on which the coated bars are placed outdoors shall be recorded on the identification tag on the bundled steel. Coated steel reinforcing bars, whether individual bars or bundles of bars, or both, shall be covered with opaque

Copyright by ASTM Int'l (all rights reserved); Tue Jan 17 11:34:18 EST 2012
Downloaded/printed by
Wes Miller (Gerdau+Knoxville+ZBAR) pursuant to License Agreement. No further reproductions authorized.

polyethylene sheeting or other suitable opaque protective material. For stacked bundles, the protective covering shall be draped around the perimeter of the stack. The covering shall be secured adequately, and allow for air circulation around the bars to minimize condensation under the covering.

15.3 Coated steel reinforcing bars, whether individual bars or bundles of bars, or both, shall be stored off the ground on protective cribbing.

15.4 The identification of all steel reinforcing bars shall be maintained throughout the coating and fabrication processes to the point of shipment.

16. Keywords

16.1 alloy zinc coating; barrier organic coating; coating requirements; concrete reinforcement; corrosion resistance; dual coated; powder coating; steel bars; thermal spray coating (metallization)

ANNEX

(Mandatory Information)

A1. REQUIREMENTS FOR ORGANIC COATINGS FOR DUAL-COATED STEEL REINFORCING BARS

A1.1 Powder Coatings

A1.1.1 This annex covers qualification requirements for barrier organic coatings for protecting steel reinforcing bars from corrosion.

A1.1.2 The powder coating shall be of organic composition except for the pigment, which may be inorganic if used.

A1.2 Test Materials

A1.2.1 A 1-lb [0.50-kg] sample of the powder coating with its generic description and fingerprint (including the method such as infrared spectroscopy or thermal analysis) shall be submitted to the testing agency. The fingerprint and generic description shall become an integral part of the qualification test report.

A1.2.2 A sample of patching material shall be submitted to the testing agency. The product name and a description of the patching material shall be given in the test report.

A1.2.3 The following specimens shall be submitted as a minimum for testing:

(1) Fourteen 4-ft [1.2-m] long No. 6, Grade 60 [No. 19, Grade 420] deformed steel reinforcing bars with a coating thickness of 7 to 12 mils [175 to 300 µm].

(2) Six uncoated and uncleaned No. 6 [No. 19] steel reinforcing bars, 4-ft [1.2-m] long and from the same lot of steel as the coated bars.

(3) Four 4 by 4 by 0.05 in. [100 by 100 by 1.3 mm] steel plates with center holes for Taber abrasers coated to a thickness of 10 ± 2 mils [250 ± 50 µm].

(4) Four free films of coating material with a thickness of 7 to 9 mils [175 to 225 µm]. The films shall be at least 4 by 4 in. [100 by 100 mm].

(5) Fourteen coated No. 6 [No. 19] steel reinforcing bars, 10-in. [0.25-m] long, coated to a thickness of 7 to 12 mils [175 to 300 µm]. The coated steel reinforcing bars shall have their ends sealed with patching material.

A1.2.3.1 Steel reinforcing bars with a nominal diameter within ±0.04 in. [1 mm] of No. 6 [No. 19] bars shall be acceptable for qualification testing.

A1.2.3.2 The coating on the bars and films tested shall be free of holes, voids, contamination, cracks, and damaged areas. The coated bars shall be checked for holidays using a 67.5-V, 80 000-Ω wet–sponge type dc holiday detector in accordance with Test Methods G62. The total number of holidays found on the bar specimens tested shall be reported.

A1.2.3.3 Coating thickness measurements shall be made in accordance with 8.1.

A1.2.3.4 The manufacturer shall specify the method and grade of metal surface preparation and the coating application procedures for the test specimens and for contract production of coated steel reinforcing bars. These procedures shall be listed in the test report.

NOTE A1.1—Production-coated steel reinforcing bars will be required to be manufactured in the same manner as the qualification bars. Therefore, it is necessary that the qualification bars be prepared in the manner proposed for production. Variation in the critical preparation, thermal treatment, and coating procedures known to be allowable without a compromise in quality should also be detailed in the qualification report.

A1.3 Coating Requirements

A1.3.1 *Chemical Resistance*—The chemical resistance of the coating shall be evaluated in accordance with Test Method G20 by immersing coated steel reinforcing bars in each of the following: distilled water, a 3*M* aqueous solution of calcium chloride ($CaCl_2$), a 3*M* aqueous solution of sodium hydroxide (NaOH), and a solution saturated with calcium hydroxide ($Ca(OH)_2$). Specimens without holidays and specimens with intentional holes drilled through the coating 0.25 in. [6 mm] in diameter shall be tested. The temperature of the test solutions shall be 75 ± 3.6°F [24 ± 2°C]. Minimum test time shall be 45 days. The coating must not blister, soften, lose bond, nor develop holidays during this period. The coating surrounding the intentionally made holes shall exhibit no undercutting during the 45-day period.

A1.3.2 *Cathodic Disbondment*—Test Method G8 shall be followed except:

A1.3.2.1 The cathode shall be a 10-in. [250-mm] long coated steel reinforcing bar;

Copyright by ASTM Int'l (all rights reserved); Tue Jan 17 11:34:18 EST 2012
Downloaded/printed by
Wes Miller (Gerdau+Knoxville+ZBAR) pursuant to License Agreement. No further reproductions authorized.

A1.3.2.2 The anode shall be a 6-in. [150-mm] long solid platinum electrode (0.06 in. [1.6 mm] nominal diameter) or platinized wire (0.125 in. [3.2 mm] nominal diameter);

A1.3.2.3 A calomel reference electrode shall be used;

A1.3.2.4 The electrolyte solution shall be 3 % sodium chloride (NaCl) by mass dissolved in distilled water;

A1.3.2.5 The electrolyte solution temperature shall be 75 ± 3.6°F [24 ± 2°C];

A1.3.2.6 The drilled coating defect shall be 0.12 in. [3 mm] in diameter;

A1.3.2.7 A potential of –1.5 V measured against the calomel reference electrode shall be applied and a 10-Ω shunt resistor used; and

A1.3.2.8 The test duration shall be 168 h.

A1.3.2.9 Fig. A1.1 presents the recommended equipment configuration for performing cathodic disbondment testing on straight steel reinforcing bars. The intentional coating defect shall be placed approximately 2 in. [50 mm] from the sealed transverse ribs. It shall be drilled just deep enough to expose a full 0.13-in. [3-mm] diameter in the steel. The test bar shall be inserted with the sealed end of the bar resting on the bottom of the test vessel and electrolyte added until 4 in. [100 mm] of the bar length is submerged.

A1.3.2.10 The tested bars shall be allowed to cool for approximately 1 ± 0.25 h prior to evaluation. Four measurements shall be taken at 0°, 90°, 180°, and 270° and the values averaged. The average coating disbondment radius of the three coated steel reinforcing bars shall not exceed 0.30 in. [7.5 mm] when measured from the edge of the intentional coating defect.

A1.3.3 *Salt Spray Resistance*—The resistance of the coating to a hot, wet corrosive environment shall be evaluated in accordance Practice B117 by exposing 10-in. [250-mm] long coated steel reinforcing bars containing intentional defects to 95 ± 3.6°F [35 ± 2°C] salt spray comprised of 5 % NaCl by mass dissolved in distilled water for 800 ± 20 h. Three intentional 0.12-in. [3-mm] diameter defects shall be drilled through the coating of each test specimen approximately evenly spaced along one side of the bar with the holes centered between deformations. The coated steel reinforcing bars shall be placed horizontally in the cabinet with the damage sites facing the side (90°). The test specimens shall be allowed to cool for approximately 1 ± 0.25 h prior to evaluation. Four measurements shall be taken, at 0°, 90°, 180°, and 270° and the values averaged. The average coating disbondment radius of nine test sites on three coated steel reinforcing bars shall not exceed 0.12 in. [3 mm] when measured from the edge of the intentional coating defect.

A1.3.4 *Chloride Permeability*—The chloride permeability characteristics of the cured coating having a film thickness of 7 to 9 mils [175 to 225 µm] shall be measured on two test films and a control film at 75 ± 3.6°F [24 ± 2°C] for 45 days. The permeability cells shall be of the type shown in Fig. A1.2. Film selected for testing shall be carefully handled and examined for any defects prior to installation in the cell. The cell shall consist of two glass compartments separated by a coating film sandwiched between two glass plates, each having a centered 1-in. [25-mm] hole. One compartment shall contain 5.4 oz [175 mL] of 3*M* NaCl and the other 3.5 oz [115 mL] of distilled water. The activity of chloride ions passing through the film shall be measured using a specific ion meter equipped with a chloride electrode and a double junction reference electrode. Activity measurements shall be converted into concentration values of mole per *M* [L] with a conversion diagram, constructed by plotting measured chloride ion activities versus known chloride ion concentrations. The accumulative concentration of chloride ions permeating through the film shall be less than $1 \times 10^{-4}M$.

A1.3.5 *Coating Flexibility*:

A1.3.5.1 The coating flexibility shall be evaluated by bending three coated steel reinforcing bars 180° (after rebound) around a 6-in. [150-mm] diameter mandrel. The bend shall be

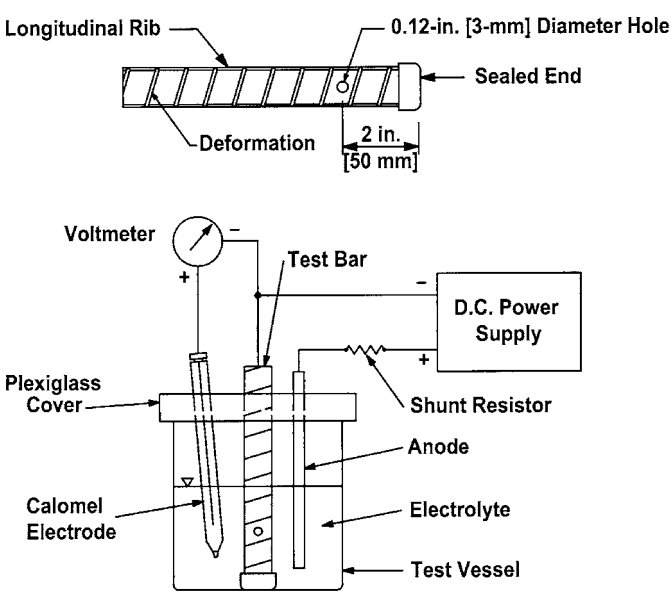

FIG. A1.1 Cathodic Disbondment Test Equipment Configuration

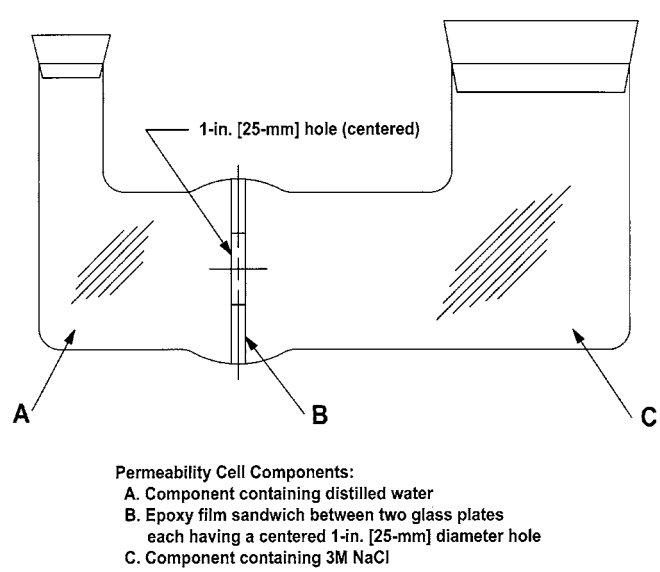

FIG. A1.2 Chloride Permeability Test Equipment Configuration

Copyright by ASTM Int'l (all rights reserved); Tue Jan 17 11:34:18 EST 2012
Downloaded/printed by
Wes Miller (Gerdau+Knoxville+ZBAR) pursuant to License Agreement. No further reproductions authorized.

made at a uniform rate and completed within a 15-s time period. The two longitudinal ribs shall be placed in a plane perpendicular to the mandrel radius and the specimen shall be between 158 and 176°F [70 and 80°C].

A1.3.5.2 No cracking of the coating shall be visible to a person with normal or corrected vision on the outside radius of any of the three bent-bars.

A1.3.5.3 A test in which fracture or partial failure of the steel reinforcing bar, or cracking or disbonding caused by imperfections in the bar surface visible after performing the bend test occurs, shall be considered an invalid test and the test shall be repeated on a new specimen.

A1.3.6 *Relative Bond Strength in Concrete*—The relative bond strength of the steel reinforcing bars to concrete shall be determined with beam-end specimens by the method described in Test Method A944 using No. 6 [No. 19] steel reinforcing bars with a relative rib area (ratio of projected rib area normal to the bar axis to the product of the nominal bar perimeter and the center-to-center rib spacing) between 0.075 and 0.085. The bars shall be bottom-cast and shall have a cover of 1.5 ± 0.06 in. [40 ± 2 mm], a lead length of 0.5 ± 0.12 in. [13 ± 3 mm], and a bonded length of 10 ± 0.25 in. [250 ± 5 mm]. Test bars shall be oriented so that the longitudinal ribs and direction of rolling, relative to the direction of the applied tension, are the same for coated and uncoated bars. The test bars must be pulled in the same direction with respect to the direction of rolling. Three to six coated bar specimens and three to six uncoated bar specimens shall be tested. All steel reinforcing bars in a test group shall be from the same steel heat. The uncoated bars shall be cleaned only by lightly wiping with acetone or other suitable solvent. The mean bond strength of the coated bars shall not be less than 85 % of the mean bond strength of the uncoated bars.

A1.3.7 *Abrasion Resistance*—The resistance of the coating on each of three steel panels to abrasion by a Taber abraser (Test Method D4060) or its equivalent, using CS-10 wheels and a 2.2-lb [1-kg] load per wheel, shall be such that the weight loss shall not exceed 0.0035 oz [100 mg]/1000 cycles.

A1.3.8 *Impact Test*—The resistance of the steel reinforcing bar coating to mechanical damage shall be determined by the falling weight test. A test apparatus similar to that described in Test Method G14 shall be used along with a 4-lb [1.8-kg] tup having a nose diameter of 0.63 in. [16 mm]. Impact shall occur on the low-lying areas on the coated steel reinforcing bars, that is, between deformations or ribs. The test shall be performed at 75 ± 3.6°F [24 ± 2°C]. With an impact of 80 in.-lbf [9 Nm], no shattering, cracking, or bond loss of the coating shall occur except at the impact area, that is, the area permanently deformed by the tup.

A1.4 Qualification Testing

A1.4.1 *Testing Agency*—Qualification tests shall be performed by an agency acceptable to the purchaser.

A1.5 Certification

A1.5.1 A report summarizing the results of all tests and bearing the signature of the testing laboratory shall be furnished to the manufacturer.

APPENDIX

(Nonmandatory Information)

X1. GUIDELINES FOR JOB-SITE PRACTICES

X1.1 This specification is a product standard. Requirements for zinc and epoxy dual-coated steel reinforcing bars from the point of shipment to the job-site and subsequent practices at the job-site are not delineated in this product standard.

X1.2 The American Concrete Institute has published "Specifications for Structural Concrete (ACI 301)." Standard Specifications ACI 301 is intended to be used in its entirety in the project specifications. An architect-engineer may cite Standard specifications ACI 301 in the project specifications for any cast-in-place concrete construction project. Standard Specifications ACI 301 includes provisions for fusion-bonded powder coated steel reinforcing bars.

X1.3 The project specifications should prescribe requirements for the coated steel reinforcing bars from the point of shipment to the job-site and subsequent practices at the job-site. In the absence of these requirements in the project specifications, the following guidelines for job-site practices are recommended:

X1.3.1 When handling coated steel reinforcing bars, care should be exercised to avoid bundle-to-bundle or bar-to-bar abrasion.

X1.3.2 Equipment for handling coated steel reinforcing bars should have protected contact areas.

X1.3.3 Coated steel reinforcing bars should be off-loaded as close as possible to their points of placement or under the crane so that the bars can be hoisted to the area of placement to minimize re-handling.

X1.3.4 Coated steel reinforcing bars should be stored off the ground on protective cribbing, and timbers placed between bundles when stacking is necessary. Space the supports sufficiently close to prevent sags in the bundles.

X1.3.5 Coated and uncoated steel reinforcing bars should be stored separately.

X1.3.6 Long-term storage should be minimized and work stoppages phased to suit construction progress.

X1.3.7 If circumstances require storing coated steel reinforcing bars outdoors for more than two months, protective

Copyright by ASTM Int'l (all rights reserved); Tue Jan 17 11:34:18 EST 2012
Downloaded/printed by
Wes Miller (Gerdau+Knoxville+ZBAR) pursuant to License Agreement. No further reproductions authorized.

storage measures should be implemented to protect the material from sunlight, salt spray, and weather exposure. If the coated steel reinforcing bars are stored outdoors without cover, it is recommended that the date on which the coated bars are placed outdoors be recorded on the identification tag on the bundled steel. Coated steel reinforcing bars stored in corrosive environments may require protection sooner. Coated steel reinforcing bars or bundles should be covered with opaque polyethylene sheeting or other suitable opaque protective material. For stacked bundles, the protective covering should be draped around the perimeter of the stack. The covering should be secured adequately and allow for air circulation around the bars to minimize condensation under the covering.

X1.3.8 When the extent of damaged coating exceeds 2 % of the surface area of the coated steel reinforcing bar in any 1-ft [0.3-m] length, the coated bar should be rejected.

X1.3.9 When the extent of the damage does not exceed 2 % of the surface area in any 1-ft [0.3-m] length, all damaged coating discernible to a person with normal or corrected vision should be repaired with patching material.

NOTE X1.1—If the amount of repaired damaged coating in any 1-ft [0.3-m] length of a coated bar exceeds 2 %, that section should be removed from the coated steel reinforcing bar and discarded. In patching damaged coating, care should be taken not to apply the patching material over an excessive area of the intact coating during the repair process. Too large an area of thick patching material, especially on smaller-size reinforcing bars, is likely to cause a reduction bond strength of bar to concrete.

X1.3.10 Coated steel reinforcing bars should not be flame cut.

X1.3.11 Placed coated steel reinforcing bars should be inspected for damaged coating prior to placing concrete. Where damage exists, it should be repaired with patching material complying with this specification.

X1.3.12 Patching material should be applied in strict accordance with the written instructions furnished by the patching material manufacturer. Prior to application of the patching material, rust should be removed from the damaged areas by suitable means. The patching material should be allowed to cure before placing concrete over the coated steel reinforcing bars.

X1.3.13 When placing coated steel reinforcing bars, all wire bar supports, spacers, and tying wire should be coated with dielectric material, for example, an epoxy-coated or plastic-coated material compatible with concrete.

X1.3.14 After placing, walking on coated steel reinforcing bars should be minimized. The placement of mobile equipment should be planned to avoid damage to the coated bars.

X1.3.15 When immersion-type vibrators are used to consolidate concrete around fusion bonded powder coated steel reinforcing steel bars, the vibrators should be equipped with rubber or nonmetallic vibrator heads.

SUMMARY OF CHANGES

Committee A01 has identified the location of selected changes to this standard since the last issue (A1055 – 08aε1) that may impact the use of this standard. (Approved Dec. 1, 2010.)

(*1*) Revised 7.3, 8.3.1, Note 10, and Annex A1.

ASTM International takes no position respecting the validity of any patent rights asserted in connection with any item mentioned in this standard. Users of this standard are expressly advised that determination of the validity of any such patent rights, and the risk of infringement of such rights, are entirely their own responsibility.

This standard is subject to revision at any time by the responsible technical committee and must be reviewed every five years and if not revised, either reapproved or withdrawn. Your comments are invited either for revision of this standard or for additional standards and should be addressed to ASTM International Headquarters. Your comments will receive careful consideration at a meeting of the responsible technical committee, which you may attend. If you feel that your comments have not received a fair hearing you should make your views known to the ASTM Committee on Standards, at the address shown below.

This standard is copyrighted by ASTM International, 100 Barr Harbor Drive, PO Box C700, West Conshohocken, PA 19428-2959, United States. Individual reprints (single or multiple copies) of this standard may be obtained by contacting ASTM at the above address or at 610-832-9585 (phone), 610-832-9555 (fax), or service@astm.org (e-mail); or through the ASTM website (www.astm.org). Permission rights to photocopy the standard may also be secured from the ASTM website (www.astm.org/COPYRIGHT/).

Copyright by ASTM Int'l (all rights reserved); Tue Jan 17 11:34:18 EST 2012
Downloaded/printed by
Wes Miller (Gerdau+Knoxville+ZBAR) pursuant to License Agreement. No further reproductions authorized.

Material Safety Data Sheet

Material Name: Carbon Steel

* * * Section 1 - Chemical Product and Company Identification * * *

Manufacturer Information

Gerdau Ameristeel
4221 West Boy Scout Blvd.
Suite 600
Tampa, FL 33607

Phone: (800) 876-3626

Emergency # 800-424-9300 CHEMTREC

* * * Section 2 - Hazards Identification * * *

Emergency Overview

Fumes may cause irritation of the eyes and respiratory tract.

Potential Health Effects: Eyes

May cause irritation.

Potential Health Effects: Skin

Not considered to cause skin effects. Sensitive individuals may experience skin irritation.

Potential Health Effects: Ingestion

Not considered a route of exposure under anticipated product use conditions.

Potential Health Effects: Inhalation

Inhalation of fumes may cause irritation of the nose, throat and lungs. Chronic irritation may cause bronchitis, pneumonitis, siderosis, upper respiratory tract irritation, headaches, lack of coordination, metal fume fever.

Medical Conditions Aggravated by Exposure

Respiratory conditions may be aggravated by exposure to metal fumes or dusts.

HMIS Ratings: Health: 1 **Fire:** 0 **HMIS Reactivity** 0

Hazard Scale: 0 = Minimal 1 = Slight 2 = Moderate 3 = Serious 4 = Severe * = Chronic hazard

* * * Section 3 - Composition / Information on Ingredients * * *

CAS #	Component	Percent
1309-37-1	Iron oxide	97
7439-96-5	Manganese	2
7440-50-8	Copper	1.5
124-38-9	Carbon dioxide	0.9
7440-02-0	Nickel	0.5
7440-21-3	Silicon	0.4
7440-31-5	Tin	0.08
7446-09-5	Sulfur dioxide	0.08
7723-14-0	Phosphorus	0.06
1314-62-1	Vanadium pentoxide	0.05

* * * Section 4 - First Aid Measures * * *

First Aid: Eyes

In case of contact with eyes, rinse immediately with plenty of water and seek medical advice.

First Aid: Skin

For skin contact, flush with large amounts of water. If irritation persists, get medical attention.

First Aid: Ingestion

If the material is swallowed, get immediate medical attention or advice.

First Aid: Inhalation

Move person to non-contaminated air. Seek medical attention.

* * * Section 5 - Fire Fighting Measures * * *

General Fire Hazards

See Section 9 for Flammability Properties.
Concentrations of metallic fines in the air could present an explosion hazard.

Hazardous Combustion Products

Above the melting point, iron oxide fumes may be present.

Extinguishing Media

For molten metal, use Class D chemical or sand.

Fire Fighting Equipment/Instructions

Firefighters should wear full protective gear.

NFPA Ratings: Health: 1 **Fire:** 0 **Reactivity:** 0

Hazard Scale: 0 = Minimal 1 = Slight 2 = Moderate 3 = Serious 4 = Severe

* * * Section 6 - Accidental Release Measures * * *

Containment Procedures

None necessary.

Clean-Up Procedures

Fine particles and small chips should be swept up and disposed of properly.

Evacuation Procedures

Isolate area. Keep unnecessary personnel away.

Special Procedures

User should consult applicable standards for specific process employed to determine any special precautions needed to insure the health and safety of its employees.

* * * Section 7 - Handling and Storage * * *

Handling Procedures

Avoid contact with skin and eyes. Wash thoroughly after handling.

Storage Procedures

No special storage procedures necessary.

* * * Section 8 - Exposure Controls / Personal Protection * * *

A: Component Exposure Limits

Iron oxide (1309-37-1)

ACGIH: 5 mg/m3 TWA (respirable fraction)
OSHA: 10 mg/m3 TWA (fume)
NIOSH: 5 mg/m3 TWA (dust and fume, as Fe)

Manganese (7439-96-5)

ACGIH: 0.2 mg/m3 TWA
OSHA: 1 mg/m3 TWA (fume)
3 mg/m3 STEL (fume)
5 mg/m3 Ceiling
NIOSH: 1 mg/m3 TWA (fume)
3 mg/m3 STEL

Copper (7440-50-8)

ACGIH: 0.2 mg/m3 TWA (fume); 1 mg/m3 TWA (dust and mist, as Cu)
OSHA: 0.1 mg/m3 TWA (dust, fume, mists, as Cu)
NIOSH: 1 mg/m3 TWA (dust and mist)

Carbon dioxide (124-38-9)

ACGIH: 5000 ppm TWA
30000 ppm STEL
OSHA: 10000 ppm TWA; 18000 mg/m3 TWA
30000 ppm STEL; 54000 mg/m3 STEL
NIOSH: 5000 ppm TWA; 9000 mg/m3 TWA
30000 ppm STEL; 54000 mg/m3 STEL

Nickel (7440-02-0)

ACGIH: 1.5 mg/m3 TWA (inhalable fraction)
OSHA: 1 mg/m3 TWA
NIOSH: 0.015 mg/m3 TWA

Silicon (7440-21-3)

OSHA: 10 mg/m3 TWA (total dust); 5 mg/m3 TWA (respirable fraction)
NIOSH: 10 mg/m3 TWA (total dust); 5 mg/m3 TWA (respirable dust)

Tin (7440-31-5)

ACGIH: 2 mg/m3 TWA
OSHA: 2 mg/m3 TWA
NIOSH: 2 mg/m3 TWA

Sulfur dioxide (7446-09-5)

ACGIH: 2 ppm TWA
5 ppm STEL
OSHA: 2 ppm TWA; 5 mg/m3 TWA
5 ppm STEL; 15 mg/m3 STEL
NIOSH: 2 ppm TWA; 5 mg/m3 TWA
5 ppm STEL; 13 mg/m3 STEL

Phosphorus (7723-14-0)

OSHA: 0.1 mg/m3 TWA
NIOSH: 0.1 mg/m3 TWA

Vanadium pentoxide (1314-62-1)

ACGIH: 0.05 mg/m3 TWA (dust or fume, respirable fraction)
NIOSH: 0.05 mg/m3 Ceiling (15 min, dust and fume, as V)

Engineering Controls

Use general ventilation and use local exhaust, where possible, in confined or enclosed spaces.

PERSONAL PROTECTIVE EQUIPMENT

Personal Protective Equipment: Eyes/Face

Wear safety glasses; chemical goggles for fumes which may arise from thermal processing.

Personal Protective Equipment: Skin

Use impervious gloves.

Personal Protective Equipment: Respiratory

If airborne concentrations are above the applicable exposure limits, use NIOSH approved respiratory protection.

Personal Protective Equipment: General

Eye wash fountain and emergency showers are recommended.

* * * Section 9 - Physical & Chemical Properties * * *

Appearance:	Grey metallic	**Odor:**	Metallic or odorless
Physical State:	Solid	**pH:**	NA
Vapor Pressure:	NA	**Vapor Density:**	NA
Boiling Point:	3000°C (5432°F)	**Melting Point:**	1535°C (2795°F)
Solubility (H2O):	NA	**Specific Gravity:**	7.0
Evaporation Rate:	NA	**VOC:**	NA
Octanol/H2O Coeff.:		**Flash Point:**	NA
Flash Point Method:	NA	**Upper Flammability Limit (UFL):**	NA
Lower Flammability Limit (LFL):	NA	**Burning Rate:**	NA
Auto Ignition:	NA		

* * * Section 10 - Chemical Stability & Reactivity Information * * *

Chemical Stability

This is a stable material.

Chemical Stability: Conditions to Avoid

None

Incompatibility

Strong Acids

Hazardous Decomposition

Metal fumes if heated. Above the melting point, iron oxide fumes may be present

Possibility of Hazardous Reactions

Will not occur.

* * * Section 11 - Toxicological Information * * *

Acute Dose Effects

A: General Product Information

Operations or fire which supply sufficient energy to the product (i.e. welding, high speed grinding or melting) can release dust or fumes which may make components of the product biologically available. Exposure to dusts or fumes from some metals including iron, zinc, manganese, chromium, cobalt and copper can produce a condition known as metal fume fever. Iron dust can irritate the eyes and respiratory tract by mechanical action. Acute iron poisoning may involve hemorrhagic vomiting and diarrhea, abdominal pain, acidosis, coagulaopathy, shock, coma and convulsions followed by hepatic and renal failure and perhaps cardiovascular collapse. Chronic inhalation of iron has resulted in mottling of the lungs, a condition referred to as siderosis.

Systemic effects from ingestion of nickel include capillary damage, kidney damage, myocardial weakness and central nervous system depression. Allergic skin sensitization reactions are the most frequent effect of exposure to nickel compounds. Exposure to nickel compounds may also result in allergic lung sensitization. Exposure to copper fume or dust can cause respiratory tract irritation, hemolytic anemia and allergic contact dermatitis.

B: Component Analysis - LD50/LC50

Iron oxide (1309-37-1)
Oral LD50 Rat: >10000 mg/kg

Manganese (7439-96-5)
Oral LD50 Rat: 9 g/kg

Nickel (7440-02-0)
Oral LD50 Rat: >9000 mg/kg

Silicon (7440-21-3)
Oral LD50 Rat: 3160 mg/kg

Sulfur dioxide (7446-09-5)
Inhalation LC50 Rat: 2500 ppm/1H

Phosphorus (7723-14-0)
Inhalation LC50 Rat: 4.3 mg/L/1H; Oral LD50 Rat:3.03 mg/kg; Dermal LD50 Rat:100 mg/kg

Vanadium pentoxide (1314-62-1)
Inhalation LC50 Rat: 2.21 mg/L/4H; Oral LD50 Rat:10 mg/kg; Dermal LD50 Rat:>2500 mg/kg

Carcinogenicity

A: General Product Information

The carcinogenic effect of nickel has been well documented in occupationally exposed nickel refinery workers. Lung and nasal cancers were the predominant forms of cancer in the exposed workers.

B: Component Carcinogenicity

Iron oxide (1309-37-1)

ACGIH: A4 - Not Classifiable as a Human Carcinogen
IARC: Supplement 7 [1987], Monograph 1 [1972] (Group 3 (not classifiable))

Nickel (7440-02-0)

ACGIH: A5 - Not Suspected as a Human Carcinogen
NIOSH: potential occupational carcinogen
NTP: Reasonably Anticipated To Be A Human Carcinogen (Possible Select Carcinogen)
IARC: Monograph 49 [1990], Supplement 7 [1987] (Group 2B (possibly carcinogenic to humans))

Sulfur dioxide (7446-09-5)

ACGIH: A4 - Not Classifiable as a Human Carcinogen
IARC: Monograph 54 [1992] (Group 3 (not classifiable))

Vanadium pentoxide (1314-62-1)

ACGIH: A4 - Not Classifiable as a Human Carcinogen
IARC: Monograph 86 [2006] (Group 2B (possibly carcinogenic to humans))

Teratogenicity

Manganese, copper and nickel have been reported to have adverse reproductive effects in experimental animals. Copper and nickel have been shown to be fetotoxic in experimental animals.

Neurological Effects

Chronic overexposure to manganese compounds may result in CNS effects such as weakness, sleepiness, emotional instability and spastic gait. These effects can be permanent.

Other Toxicological Information

Under normal conditions of handling, the likelihood of inhaling or ingesting amounts necessary for these effects to occur is very small.

* * * Section 12 - Ecological Information * * *

Ecotoxicity

A: General Product Information

No information available for the product.

B: Component Analysis - Ecotoxicity - Aquatic Toxicity

Copper (7440-50-8)

Test & Species		Conditions
96 Hr LC50 Pimephales promelas	23 µg/L	
96 Hr LC50 Oncorhynchus mykiss	13.8 µg/L	
96 Hr LC50 Lepomis macrochirus	236 µg/L	
72 Hr EC50 Scenedesmus subspicatus	120 µg/L	
96 Hr EC50 water flea	10 µg/L	
96 Hr EC50 water flea	200 µg/L	

Nickel (7440-02-0)

Test & Species		Conditions
96 Hr LC50 Oncorhynchus mykiss	31.7 mg/L	adult
96 Hr LC50 Pimephales promelas	3.1 mg/L	
96 Hr LC50 Brachydanio rerio	>100 mg/L	
72 Hr EC50 freshwater algae (4 species)	0.1 mg/L	
72 Hr EC50 Selenastrum capricornutum	0.18 mg/L	
96 Hr EC50 water flea	510 µg/L	

Phosphorus (7723-14-0)

Test & Species		Conditions
96 Hr LC50 Lepomis macrochirus	0.0024 mg/L [flow-through]	
96 Hr LC50 Brachydanio rerio	>100 mg/L [static]	
48 Hr EC50 Daphnia magna	0.111 mg/L	

* * * Section 13 - Disposal Considerations * * *

US EPA Waste Number & Descriptions

Component Waste Numbers

Vanadium pentoxide (1314-62-1)

RCRA: waste number P120

Disposal Instructions

Dispose of waste material according to Local, State, Federal, and Provincial Environmental Regulations. See Section 7 for Handling Procedures. See Section 8 for Personal Protective Equipment recommendations.

* * * Section 14 - Transportation Information * * *

US DOT Information

Shipping Name: Not Regulated

TDG Information

Shipping Name: Not Regulated

* * * Section 15 - Regulatory Information * * *

US Federal Regulations

A: Component Analysis

This material contains one or more of the following chemicals required to be identified under SARA Section 302 (40 CFR 355 Appendix A), SARA Section 313 (40 CFR 372.65) and/or CERCLA (40 CFR 302.4).

Manganese (7439-96-5)

SARA 313: 1.0 % de minimis concentration

Copper (7440-50-8)

SARA 313: 1.0 % de minimis concentration

CERCLA: 5000 lb final RQ (no reporting of releases of this hazardous substance is required if the diameter of the pieces of the solid metal released is larger than 100 micrometers); 2270 kg final RQ (no reporting of releases of this hazardous substance is required if the diameter of the pieces of the solid metal released is larger than 100 micrometers)

Nickel (7440-02-0)

SARA 313: 0.1 % de minimis concentration

CERCLA: 100 lb final RQ (no reporting of releases of this hazardous substance is required if the diameter of the pieces of the solid metal released is larger than 100 micrometers); 45.4 kg final RQ (no reporting of releases of this hazardous substance is required if the diameter of the pieces of the solid metal released is larger than 100 micrometers)

Sulfur dioxide (7446-09-5)

SARA 302: 500 lb TPQ

Phosphorus (7723-14-0)

SARA 302: 100 lb TPQ (This material is a reactive solid. The TPQ does not default to 10000 pounds for non-powder, non-molten, non-solvent form)
CERCLA: 1 lb final RQ; 0.454 kg final RQ

Vanadium pentoxide (1314-62-1)

SARA 302: 100 lb lower threshold TPQ; 10000 lb upper threshold TPQ
CERCLA: 1000 lb final RQ; 454 kg final RQ

B: Component Marine Pollutants

This material contains one or more of the following chemicals required by US DOT to be identified as marine pollutants.

Component	CAS #	
Copper	7440-50-8	DOT regulated severe marine pollutant

State Regulations

A: General Product Information

Product may be subject to reporting in states other than those listed for individual components.

B: Component Analysis - State

The following components appear on one or more of the following state hazardous substances lists:

Component	CAS	CA	MA	MN	NJ	PA	RI
Iron oxide	1309-37-1	Yes	Yes	Yes	Yes	Yes	Yes
Manganese	7439-96-5	Yes	Yes	Yes	Yes	Yes	Yes
Copper	7440-50-8	Yes	Yes	Yes	Yes	Yes	Yes
Carbon dioxide	124-38-9	Yes	Yes	Yes	Yes	Yes	Yes
Nickel	7440-02-0	Yes	Yes	Yes	Yes	Yes	Yes
Silicon	7440-21-3	No	Yes	Yes	Yes	Yes	Yes
Tin	7440-31-5	Yes	Yes	Yes	Yes	Yes	Yes
Sulfur dioxide	7446-09-5	Yes	Yes	Yes	Yes	Yes	Yes
Phosphorus	7723-14-0	Yes	Yes	Yes	Yes	Yes	Yes
Vanadium pentoxide	1314-62-1	Yes	Yes	Yes	Yes	Yes	Yes

The following statement(s) are provided under the California Safe Drinking Water and Toxic Enforcement Act of 1986 (Proposition 65):

WARNING! This product contains a chemical known to the state of California to cause cancer.

Component Analysis - WHMIS IDL

The following components are identified under the Canadian Hazardous Products Act Ingredient Disclosure List:

Component	CAS #	Minimum Concentration
Iron oxide	1309-37-1	1 %
Manganese	7439-96-5	1 %
Copper	7440-50-8	1 %
Nickel	7440-02-0	0.1 %

Additional Regulatory Information

Component Analysis - Inventory

Component	CAS #	TSCA	CAN	EEC
Iron oxide	1309-37-1	Yes	DSL	EINECS
Manganese	7439-96-5	Yes	DSL	EINECS
Copper	7440-50-8	Yes	DSL	EINECS
Carbon dioxide	124-38-9	Yes	DSL	EINECS
Nickel	7440-02-0	Yes	DSL	EINECS
Silicon	7440-21-3	Yes	DSL	EINECS
Tin	7440-31-5	Yes	DSL	EINECS
Sulfur dioxide	7446-09-5	Yes	DSL	EINECS
Phosphorus	7723-14-0	Yes	DSL	EINECS
Vanadium pentoxide	1314-62-1	Yes	DSL	EINECS

* * * Section 16 - Other Information * * *

Other Information

Reasonable care has been taken in the preparation of this information, but the manufacturer makes no warranty of merchantability or any other warranty, expressed or implied, with respect to this information. The manufacturer makes no representations and assumes no liability for any direct, incidental or consequential damages resulting from its use.

Key/Legend

ACGIH = American Conference of Governmental Industrial Hygienists; ADG = Australian Code for the Transport of Dangerous Goods by Road and Rail; ADR/RID = European Agreement of Dangerous Goods by Road/Rail; AS = Standards Australia; DFG = Deutsche Forschungsgemeinschaft; DOT = Department of Transportation; DSL = Domestic Substances List; EEC = European Economic Community; EINECS = European Inventory of Existing Commercial Chemical Substances; ELINCS = European List of Notified Chemical Substances; EU = European Union; HMIS = Hazardous Materials Identification System; IARC = International Agency for Research on Cancer; IMO = International Maritime Organization; IATA = International Air Transport Association; MAK = Maximum Concentration Value in the Workplace; NDSL = Non-Domestic Substances List; NFPA = National Fire Protection Association; NOHSC = National Occupational Health & Safety Commission; NTP = National Toxicology Program; STEL = Short-term Exposure Limit; TDG = Transportation of Dangerous Goods; TLV = Threshold Limit Value; TSCA = Toxic Substances Control Act; TWA = Time Weighted Average

End of Sheet

MSDS Boon-Cooker

The Platt Bros. & Co.
P. O. Box 1030 (2670 S. Main St.)
Waterbury, CT 06721
(203) 753-4194

PBC-2M
DATE: February 20, 1987
Rev. June 12, 1997

MATERIAL SAFETY DATA SHEET

PRODUCT NAME: Zinc/Aluminum base alloys in wire, rod, bar, strip, coil, tube and scrap

CHEMICAL FAMILY: Zinc/Aluminum Alloy

USE OF PRODUCT: Article Fabrication

Product includes the following grade Zinc/Aluminum Alloys 300, 1311, 1312, 1313, 1314, 1315

SECTION I -- CHEMICAL COMPOSITION

Alloy may contain any or all of the chemical constituents listed below:

	CAS. NO	RANGE (%)	TLV (mg/m^3)	
Zinc	7440-66-6	80 - 99	1.0	As Fume
Aluminum	7429-90-5	0 - 16.5	10.0	As Dust or Oxide
Cadmium	7440-43-9	0 - 0.005	0.05	As Dust or Fume
Copper	7440-50-8	0 - 0.75	0.2	As Fume
Iron	7439-89-6	0 - 0.75	5.0	As Fume
Lead	7439-92-1	0 - 0.007	0.05	As Dust or Fume
Titanium	7440-32-6	0 - 0.002	10.0	As Dioxide

SECTION II -- PHYSICAL DATA

Melting Point: 710-1200°F
Boiling Point: N.A.
Specific Gravity: (H_2O = 1) 2.5 - 8.5
Vapor Pressure: N. A.

The product is a bluish white to silvery solid at room temperature, and exhibits no odor. Negligible solubility in water.

SECTION III -- STORAGE, FIRE & REACTIVITY

Flash Point: N.A. Auto Ignition: N.A.
Flammability Limits: N.A.

There is no unusual fire and explosion hazard with these alloys. Never use water as an extinguishing agent around molten metal. Water will react violently with any molten metal. Use self-contained breathing apparatus for protection against degradation products and fire fighting techniques or agents applicable to surrounding materials. Small chips, fine turnings and dust may ignite readily. Do not use halogenated extinguishing agents on small chips or fines. Dust clouds may be explosive.

This alloy is stable, non-hazardous solid at room temperature.

Material may react with strong acids or alkaline materials.

Material does not present a significant health hazard under normal handling and storage.

SECTION IV -- HEALTH HAZARD DATA

Under normal handling conditions the solid alloy presents no significant health hazards. Processing of the alloy by dust or fume producing operations (grinding, buffing, sawing, forging, cutting, welding, etc.) may result in the potential for exposure to airborn metal particulates or fume. The exposure levels in SECTION I are relevant to fumes or dusts.

EFFECTS OF OVEREXPOSURE

Acute exposure to Zinc/Aluminum dust or fume may cause irritation to the eyes, nose or throat; leave a metallic taste in the mouth; result in metal fume fever; or produce flu-like symptoms.

Aluminum: May initiate fibrotic changes to lung tissue.

Cadmium: Loss of smell, ulceration of the nose, shortness of breath, (emphysema), kidney damage, and mild anemia, also reported to cause an increased incidence of cancer of the prostate in men.

Copper: No chronic debilitating symptoms indicated.

Iron: Siderosis

Lead: Anemia, urinary dysfunction, metallic taste in mouth, weakness, constipation, nausea, nervous disorder.

Zinc: Chromosomal anomalies in leukocytes reported. Arthritic, lameness and inflammation of the gastrointestinal tract reported from animal studies.

Titanium No chronic debilatating symptoms indicated.

SECTION V -- FIRST AID

Ingestion: Ingestion of significant amounts of Zinc alloy are unlikely. Seek medical help if large quantities of product are ingested.

Inhalation: Remove from exposure to dust or fume if present. Seek medical help if required.

Skin Contact: Flush thoroughly with water.

Eye Contact: Flush with water for at least 15 minutes. Seek medical help if required.

SECTION VI -- SPILL PROCEDURES

Product is a non-hazardous solid. No special precautions are required for spills of bulk material. Scrap metal can be reclaimed for reuse. Follow Federal, State and local regulations regarding disposal.

SECTION VII -- SPECIAL PROTECTION INFORMATION

Typically no special protection is required during use of the product beyond that required for the process operation being employed. Where dust or fume levels are greater than those specified in SECTION I, NIOSH approved respiratory protection should be used. Use local exhaust ventilation for dust/fume. Use approved goggles for eye protection.

SECTION VIII -- SPECIAL PRECAUTIONS AND COMMENTS

Wet material should never be charged into a molten bath.
Eye protection should be used when cutting, grinding, machining or buffing product.
Eye protection should also be used with any other process that generates dust, fumes or chips. Dark glasses should be worn when metallizing.

Wash hands thoroughly after use, especially before eating.

SECTION IX -- ENVIRONMENTAL/SAFETY REGULATIONS

SECTION 313 (Title III Superfund Amendment and Reauthorization Act of 1986 and 40CFR Part 372):

This product contains the following chemical(s) subject to the reporting requirements of SECTION 313. Zinc (Fume or Dust), CAS Number 7440-66-6, 98% by weight, Aluminum (Metal Dust), CAS Number 7429-90-5, 15% by weight.

The information in this Material Safety Data Sheet was obtained from sources which we believe are reliable. However, the information is provided without any representation or warranty, expressed or implied regarding the accuracy or correctness.

The conditions or methods of handling, storage, use and disposal of the product are beyond our control and may be beyond our knowledge. For this and other reasons, we do not assume responsibility and expressly disclaim liability for loss, damage or expense arising out of or in any way connected with the handling, storage, use or disposal of the product.

The Valspar Corporation
Material Safety Data Sheet

1. PRODUCT AND COMPANY IDENTIFICATION

Material Identification

Product ID:	**PFY80001**
Product Name	YELLOW REBAR COATING
Product Use:	Powder paint
Print date	2005/07/07
Revision Date	2005/07/07

Company Identification
The Valspar Corporation
1101 Third Street South
Minneapolis, MN 55415
Manufacturer's Phone: 1-612-332-7371

24-Hour Medical Emergency Phone: 1-888-345-5732

2. COMPOSITION / INFORMATION ON HAZARDOUS INGREDIENTS

Common Name CAS-No.	approx. Weight %	Chemical name
Trade Secret : PROPRIETARY PIGMENT	1 - 5	PROPRIETARY PIGMENT
Trade Secret : SUPPLIER TRADE SECRET	1 - 5	SUPPLIER TRADE SECRET

If this section is blank there are no hazardous components per OSHA guidelines.

3. HAZARDS IDENTIFICATION

Primary Routes of Exposure:
Inhalation
Ingestion
Skin absorption

Emergency Overview:
This section not in use.

This product contains ingredients that may contribute to the following potential acute health effects:

Inhalation Effects:
May irritate the lungs

Eye Contact:
May cause mechanical irritation

Skin Contact:
May cause skin sensitization.

Acute Ingestion:
None known

Other Effects:
None known

This product contains ingredients that may contribute to the following potential chronic health effects:

Overexposure to ingredients in this product may cause eye irritation and respiratory tract irritation. May cause skin sensitization. Possible sensitization.

See Section 11 for toxicological information about Mutagens, Teratogens and Carcinogens.

If this section is blank, no information is available.

4. FIRST AID MEASURES

Inhalation:
If inhaled, remove from area to fresh air. Get medical attention if respiratory irritation develops or if breathing becomes difficult.

Eye Contact:
In case of contact, immediately flush eyes with plenty of water for at least 15 minutes and get medical attention if irritation persists.

Skin Contact:
In case of contact, immediately flush skin with plenty of soap and water for at least 15 minutes. If irritation persists get medical attention.

Ingestion:
If swallowed , do not induce vomiting. Give large quantities of water. If available, give several glasses of milk. Never give anything by mouth to an unconscious person. Get medical attention immediately.

Medical conditions aggravated by exposure: Any respiratory or skin condition.

5. FIRE FIGHTING MEASURES

Flash point (Fahrenheit):	950° F (510° C) TCC/PM
Lower explosive limit:	Not available. %
Upper explosive limit:	Not available. %
Autoignition temperature:	Not available. ° F (° C)
Sensitivity to impact:	No.
Sensitivity to static discharge:	Dust may carry a static charge - see Section 7 for handling and storage procedures. Sensitivity to static discharge is not expected.
Hazardous combustion products:	See Section 10.

Unusual fire and explosion hazards:
Refer to 1995 edition of NFPA 33 Appendix A. A minimum explosive concentration of dust in the air of 30 grams per cubic meter of air can be used. Dust control and good housekeeping are required. Dust may also carry a static charge. Make sure equipment and personnel are grounded to avoid static discharge.

Extinguishing media:
Carbon dioxide, dry chemical, foam and/or water fog.

Fire fighting procedures:
None required, however, when fighting chemical fires, self-contained breathing apparatus and protective clothing is recommended.

Decomposes without flashing

6. ACCIDENTAL RELEASE MEASURES

Action to be taken if material is released or spilled:
Shovel up and dispose of in an approved manner.

7. HANDLING AND STORAGE

Precautions to be taken in handling and storage:
Minimize the free fall distance of powder when loading, unloading or conveying to avoid dust generation and potential static discharge. Keep container closed when not in use. Keep away from heat, sparks, and flames. To prevent caking of product, do not store above 80 degree F. (27 degree C.).

8. PERSONAL PROTECTIVE EQUIPMENT AND EXPOSURE CONTROLS

Personal Protective Equipment

Eye and face protection:
Safety glasses (with side shields)

Skin protection:
Gloves: Neoprene or other nonporous.Neoprene or plastic apron and protective clothing covering exposed skin areas.

Respiratory protection:
Required for dusts and fume conditions.

Ventilation
Ventilation equipment should be explosion proof. Curing ovens should be properly vented to prevent release of curing off gases into the workplace.

Exposure Guidelines

OSHA Permissible Exposure Limits (PEL's)

Common Name CAS-No.	approx. Weight %	TWA (final)	Ceilings limits (final)	Skin designations
Trade Secret : PROPRIETARY PIGMENT	1 - 5	5 MGM3 Respirable fraction. 15 MGM3 Total dust. Respirable fraction. Listed. Total dust. Listed.		

ACGIH Threshold Limit Value (TLV's)

Common Name CAS-No.	approx. Weight %	TWA	STEL	Ceiling limits	Skin designations
Trade Secret : PROPRIETARY PIGMENT	1 - 5	10 MGM3 Inhalable particles. 3 MGM3 Respirable particles.			

If this section is blank, no information is available.

9. PHYSICAL PROPERTIES

Odor:	Powder with no distinct odor.
Physical State:	Solid
pH:	Not determined.
Vapor pressure:	Not determined. mmHG @ 68° F (20° C)
Vapor density (air = 1.0):	Not determined.
Boiling point:	Not available.° F (No information available° C)
Solubility in water:	Insoluble.
Coefficient of water/oil distribution:	Not determined.
Density (lbs per US gallon):	10.43
Specific Gravity	1.25
Evaporation rate (butyl acetate = 1.0):	Not determined.

10. STABILITY AND REACTIVITY

Stability	Stable
Conditions to Avoid:	None known.
Incompatibility:	None known.
Hazardous Polymerization:	None anticipated.
Hazardous Decomposition Products:	Carbon monoxide and carbon dioxide. Phenolics.

Sensitivity to static discharge: Dust may carry a static charge - see Section 7 for handling and storage procedures. Sensitivity to static discharge is not expected.

11. TOXICOLOGICAL INFORMATION

Mutagens:

Teratogens:

Carcinogens:

If this section is blank, no information is available.

12. ECOLOGICAL DATA

Not available at this time.

13. DISPOSAL CONSIDERATIONS

Disposal should be made in accordance with federal, state and local regulations.

14. TRANSPORTATION INFORMATION

U.S. Department of Transportation

Proper Shipping Name:	PAINT, DRY, NOT REGULATED
UN ID Number:	NRPDRY

49 CFR Hazardous Material Regulations Parts 100-180

The supplier will apply the combustible liquid exception in 49 CFR 173.150(f), limited quantity or "does not sustain combustion" exceptions and consumer commodity rules, when authorized. Please check 49 CFR Parts 100-180 to determine if the use of these exceptions applies to your shipments when re-shipping our products.

International Air Transport Association:

Proper Shipping Name:	PAINT, DRY, NOT REGULATED
UN ID Number:	NRPDRY

International Maritime Organization:

Proper Shipping Name:	PAINT, DRY, NOT REGULATED
UN ID Number:	NRPDRY

15. REGULATORY INFORMATION

U.S. FEDERAL REGULATIONS:

SARA 311/312 Hazard Class:

Acute:	Yes
Chronic:	Yes
Flammability:	No
Reactivity:	No
Sudden Pressure:	No

U.S. STATE REGULATIONS:

Pennsylvania Right To Know:

SUPPLIER TRADE SECRET	Trade Secret
PROPRIETARY PIGMENT	Trade Secret

Additional Non-Hazardous Materials

PROPRIETARY RESIN	Trade Secret

Rule 66 status of product Not photochemically reactive.

INTERNATIONAL REGULATIONS - Chemical Inventories

TSCA Inventory: All components of this product are in compliance with U.S. TSCA Chemical Substance Inventory Requirements

Canada Domestic Substances List: All components of this product are listed on the Domestic Substances List.

16. OTHER INFORMATION

HMIS Codes

Health:	1
Flammability:	1
Reactivity:	0
PPE:	X - See Section 8 for Personal Protective Equipment (PPE).

Abbreviations:
OSHA - Occupational Safety and Health Administration, IARC - International Agency for Research on Cancer, NIOSH - National Institute of Occupational Safety and Health, NTP - National Toxicology Program, ACGIH - American Conference of Governmental Industrial Hygienists, SCAQMD - South Coast Air Quality Management District, TSCA - Toxic Substances Control Act, IATA - International Air Transport Association, IMO - International Maritime Organization, DOT - Department of Transportation, NA - Not applicable, NOT ESTAB - Not established, N.A.V. - Not available, RQ - Reportable quantity, WT - Weight, MG/CU M - Milligrams per cubic meter, G/L - Grams per liter, MM - Millimeters, MPPCF - Millions of particles per cubic foot, PPM - parts per million, PPT - parts per thousand, TCC/PM - Tag closed cup / Pensky-Martens, PB - Lead, PEL - Permissible exposure level, TWA - Time Weighted Average, STEL - Short term exposure limit, C - Celsius, F - Fahrenheit.

Disclaimer:
The data on this sheet represent typical values. Since application variables are a major factor in product performance, this information should serve only as a general guide. Valspar assumes no obligation or liability for use of this information. UNLESS VALSPAR AGREES OTHERWISE IN WRITING, VALSPAR MAKES NO WARRANTIES, EXPRESS OR IMPLIED, AND DISCLAIMS ALL IMPLIED WARRANTIES INCLUDING WARRANTIES OF MERCHANTABILITY OR FITNESS FOR A PARTICULAR USE OR FREEDOM FROM PATENT INFRINGEMENT. VALSPAR WILL NOT BE LIABLE FOR ANY SPECIAL, INCIDENTAL OR CONSEQUENTIAL DAMAGES. Your only remedy for any defect in this product is the replacement of the defective product, or a refund of its purchase price, at our option. This MSDS contains additional information required by the state of Pennsylvania.

Material Safety Data Sheet

Copyright, 2008, 3M Company. All rights reserved. Copying and/or downloading of this information for the purpose of properly utilizing 3M products is allowed provided that: (1) the information is copied in full with no changes unless prior written agreement is obtained from 3M, and (2) neither the copy nor the original is resold or otherwise distributed with the intention of earning a profit thereon.

SECTION 1: PRODUCT AND COMPANY IDENTIFICATION

PRODUCT NAME: SCOTCHKOTE 413 and 413 Spray Grade Fusion Bonded Epoxy Coating
MANUFACTURER: 3M
DIVISION: Corrosion Protection Products Dept

ADDRESS: 3M Center
St. Paul, MN 55144-1000

EMERGENCY PHONE: 1-800-364-3577 or (651) 737-6501 (24 hours)

Issue Date: 03/27/2008
Supercedes Date: 05/16/2007

Document Group: 05-7299-0

Product Use:
Intended Use: Coating
Specific Use: Corrosion Protection Coating for Metal

SECTION 2: INGREDIENTS

Ingredient	C.A.S. No.	% by Wt
4,4'-ISOPROPYLIDENEDIPHENOL-EPICHLOROHYDRIN POLYMER	25068-38-6	70 - 90
TITANIUM DIOXIDE	13463-67-7	1 - 5
POLYMERIC ADDITIVE	Trade Secret	1 - 5
4,4'-ISOPROPYLIDENEDIPHENOL	80-05-7	1 - 4
EPOXY RESIN - AMINE CONDENSATE	Trade Secret	1 - 3
CHROMIUM OXIDE (CR2O3)	1308-38-9	1 - 3

SECTION 3: HAZARDS IDENTIFICATION

3.1 EMERGENCY OVERVIEW

Specific Physical Form: Powder
Odor, Color, Grade: Green Powder
General Physical Form: Solid
Immediate health, physical, and environmental hazards: Dust clouds of this material in combination with an ignition source may be explosive. May cause allergic skin reaction.

3.2 POTENTIAL HEALTH EFFECTS

Eye Contact:
Moderate Eye Irritation: Signs/symptoms may include redness, swelling, pain, tearing, and blurred or hazy vision.
Vapors released during curing may cause eye irritation. Signs/symptoms may include redness, swelling, pain, tearing, and blurred or

hazy vision.
Dust created by cutting, grinding, sanding, or machining may cause eye irritation. Signs/symptoms may include redness, swelling, pain, tearing, and blurred or hazy vision.
Skin Contact:
Moderate Skin Irritation: Signs/symptoms may include localized redness, swelling, itching, and dryness.
Allergic Skin Reaction (non-photo induced): Signs/symptoms may include redness, swelling, blistering, and itching.
Photosensitization: Signs/symptoms may include a sunburn-like reaction such as blistering, redness, swelling, and itching from minor exposure to sunlight.
Inhalation:
Vapors released during curing may cause irritation of the respiratory system. Signs/symptoms may include cough, sneezing, nasal discharge, headache, hoarseness, and nose and throat pain.
Dust from cutting, grinding, sanding or machining may cause irritation of the respiratory system. Signs/symptoms may include cough, sneezing, nasal discharge, headache, hoarseness, and nose and throat pain.
Ingestion:
Gastrointestinal Irritation: Signs/symptoms may include abdominal pain, stomach upset, nausea, vomiting and diarrhea.

3.3 POTENTIAL ENVIRONMENTAL EFFECTS

TCLP testing has been performed on this product.

SECTION 4: FIRST AID MEASURES

4.1 FIRST AID PROCEDURES

The following first aid recommendations are based on an assumption that appropriate personal and industrial hygiene practices are followed.
Eye Contact: Flush eyes with large amounts of water. If signs/symptoms persist, get medical attention.
Skin Contact: Remove contaminated clothing and shoes. Immediately flush skin with large amounts of water. If signs/symptoms develop, get medical attention. Wash contaminated clothing and clean shoes before reuse.
Inhalation: If signs/symptoms develop, remove person to fresh air. If signs/symptoms develop, get medical attention. No need for first aid is anticipated.
If Swallowed: Do not induce vomiting unless instructed to do so by medical personnel. Give victim two glasses of water. Never give anything by mouth to an unconscious person. Get medical attention.

SECTION 5: FIRE FIGHTING MEASURES

5.1 FLAMMABLE PROPERTIES

Autoignition temperature	450 - 550 ºC [*Details:* For Dust Cloud Form; determined on a range of typical coating powders.]
Autoignition temperature	325 - 375 ºC [*Details:* For Dust Layer Form; determined on a range of typical coating powders.]
Flash Point	*Not Applicable*
Flammable Limits - LEL	35 - 55 g/m3 [*Details:* Minimum Explosive Concentration (MEC) for dust - air mixture; determined on a range of typical coating powders.]
Flammable Limits - UEL	*Not Applicable*

5.2 EXTINGUISHING MEDIA

Ordinary combustible material. Use fire extinguishers with class A extinguishing agents (e.g., water, foam). Use fire extinguishers with class B extinguishing agents (e.g., dry chemical, carbon dioxide).

5.3 PROTECTION OF FIRE FIGHTERS

Special Fire Fighting Procedures: Wear full protective equipment (Bunker Gear) and a self-contained breathing apparatus (SCBA).
Unusual Fire and Explosion Hazards: Dust clouds of this material in combination with an ignition source may be explosive.

Note: See STABILITY AND REACTIVITY (SECTION 10) for hazardous combustion and thermal decomposition information.

SECTION 6: ACCIDENTAL RELEASE MEASURES

Accidental Release Measures: Observe precautions from other sections. Call 3M- HELPS line (1-800-364-3577) for more information on handling and managing the spill. Evacuate unprotected and untrained personnel from hazard area. The spill should be cleaned up by qualified personnel. Ventilate the area with fresh air. For large spill, or spills in confined spaces, provide mechanical ventilation to disperse or exhaust vapors, in accordance with good industrial hygiene practice. Warning! A motor could be an ignition source and could cause flammable gases or vapors in the spill area to burn or explode. Contain spill. Collect as much of the spilled material as possible. Use wet sweeping compound or water to avoid dusting. Sweep up. Clean up residue. Place in a closed container approved for transportation by appropriate authorities. Dispose of collected material as soon as possible.

In the event of a release of this material, the user should determine if the release qualifies as reportable according to local, state, and federal regulations.

SECTION 7: HANDLING AND STORAGE

7.1 HANDLING

Keep away from heat, sparks, open flame, pilot lights and other sources of ignition. Do not spray near flames or sources of ignition. Avoid static discharge. Avoid eye contact with dust or airborne particles. Avoid breathing of airborne material. Avoid eye contact with vapors, mists, or spray. Avoid breathing of vapors created during cure cycle. Avoid breathing of dust created by cutting, sanding, grinding or machining. Avoid skin contact. Do not eat, drink or smoke when using this product. Wash exposed areas thoroughly with soap and water. For industrial or professional use only. Keep out of the reach of children. Do not empty material near flammable solvents or in the presence of flammable vapors or flammable dust clouds.

7.2 STORAGE

Store away from heat. Store out of direct sunlight. Keep container tightly closed. Store at temperatures which are below 80 degrees F (27 C).

SECTION 8: EXPOSURE CONTROLS/PERSONAL PROTECTION

8.1 ENGINEERING CONTROLS

Provide local exhaust ventilation at transfer points. Provide ventilated enclosure for heat curing. Provide appropriate local exhaust for molten or extruded material. Provide appropriate local exhaust for cutting, grinding, sanding or machining. Curing enclosures must be exhausted to outdoors or to a suitable emission control device. Provide appropriate local exhaust when product is heated. Do not use in a confined area or areas with little or no air movement. Provide ventilation adequate to control dust concentrations below recommended exposure limits and/or control dust. Provide ventilation adequate to maintain dust concentration below minimum explosive concentrations. Use general dilution ventilation and/or local exhaust ventilation to control airborne exposures to below Occupational Exposure Limits and/or control dust, fume, or airborne particles. If ventilation is not adequate, use respiratory protection equipment.

8.2 PERSONAL PROTECTIVE EQUIPMENT (PPE)

8.2.1 Eye/Face Protection

Avoid eye contact with vapors, mists, or spray.
The following eye protection(s) are recommended: Indirect Vented Goggles.

8.2.2 Skin Protection

Avoid skin contact.

Select and use gloves and/or protective clothing to prevent skin contact based on the results of an exposure assessment. Consult with your glove and/or protective clothing manufacturer for selection of appropriate compatible materials.
Gloves made from the following material(s) are recommended: Butyl Rubber, Polyvinyl Alcohol (PVA), Polyethylene/Ethylene Vinyl Alcohol.

8.2.3 Respiratory Protection

Avoid breathing of vapors created during cure cycle. Avoid breathing of dust created by cutting, sanding, grinding or machining. Select one of the following NIOSH approved respirators based on airborne concentration of contaminants and in accordance with OSHA regulations: Half facepiece or fullface air-purifying respirator with organic vapor cartridges and P95 particulate prefilters, Half facepiece or fullface supplied-air respirator. Consult the current 3M Respiratory Selection Guide for additional information or call 1-800-243-4630 for 3M technical assistance.

8.2.4 Prevention of Swallowing

Do not eat, drink or smoke when using this product. Wash exposed areas thoroughly with soap and water.

8.3 EXPOSURE GUIDELINES

Ingredient	Authority	Type	Limit	Additional Information
4,4'-ISOPROPYLIDENEDIPHENOL	CMRG	TWA	5 mg/m3	
CHROMIUM (III) COMPOUNDS	ACGIH	TWA, as Cr	0.5 mg/m3	Table A4
CHROMIUM (III) COMPOUNDS	OSHA	TWA, as Cr	0.5 mg/m3	Table Z-1
TITANIUM DIOXIDE	ACGIH	TWA	10 mg/m3	Table A4
TITANIUM DIOXIDE	CMRG	TWA, as respirable dust	5 mg/m3	
TITANIUM DIOXIDE	OSHA	TWA, Vacated, as dust	10 mg/m3	
TITANIUM DIOXIDE	OSHA	TWA, as total dust	15 mg/m3	Table Z-1

VAC Vacated PEL:Vacated Permissible Exposure Limits [PEL] are enforced as the OSHA PEL in some states. Check with your local regulatory agency.

SOURCE OF EXPOSURE LIMIT DATA:
ACGIH: American Conference of Governmental Industrial Hygienists
CMRG: Chemical Manufacturer Recommended Guideline
OSHA: Occupational Safety and Health Administration
AIHA: American Industrial Hygiene Association Workplace Environmental Exposure Level (WEEL)

SECTION 9: PHYSICAL AND CHEMICAL PROPERTIES

Specific Physical Form:	Powder
Odor, Color, Grade:	Green Powder
General Physical Form:	Solid
Autoignition temperature	450 - 550 ºC [*Details:* For Dust Cloud Form; determined on a range of typical coating powders.]
Autoignition temperature	325 - 375 ºC [*Details:* For Dust Layer Form; determined on a range of typical coating powders.]
Flash Point	*Not Applicable*
Flammable Limits - LEL	35 - 55 g/m3 [*Details:* Minimum Explosive Concentration (MEC) for dust - air mixture; determined on a range of typical coating powders.]
Flammable Limits - UEL	*Not Applicable*
Boiling point	*Not Applicable*
Density	1.2 g/cm3
Vapor Density	*Not Applicable*
Vapor Pressure	*Not Applicable*
Specific Gravity	1.2 [*Test Method:* ASTM METHOD] [*Ref Std:* WATER=1]
pH	*Not Applicable*
Melting point	*Not Applicable*

Solubility in Water	Nil
Evaporation rate	*Not Applicable*
Volatile Organic Compounds	0 %
Percent volatile	0 %
VOC Less H2O & Exempt Solvents	0 %
Viscosity	*Not Applicable*

SECTION 10: STABILITY AND REACTIVITY

Stability: Stable.

Materials and Conditions to Avoid: Sparks and/or flames; Heat

Hazardous Polymerization: Hazardous polymerization will not occur.

Hazardous Decomposition or By-Products

Substance	Condition
Aldehydes	Not Specified
Carbon monoxide	Not Specified
Carbon dioxide	Not Specified
Oxides of Nitrogen	Not Specified
Oxides of Phosphorus	Not Specified

SECTION 11: TOXICOLOGICAL INFORMATION

Please contact the address listed on the first page of the MSDS for Toxicological Information on this material and/or its components.

SECTION 12: ECOLOGICAL INFORMATION

ECOTOXICOLOGICAL INFORMATION

Not determined.

CHEMICAL FATE INFORMATION

Not determined.

SECTION 13: DISPOSAL CONSIDERATIONS

Waste Disposal Method: For quantities <100 lbs. (50kg): dispose of waste product in a sanitary landfill. As a disposal alternative, dispose of waste product in a facility permitted to accept chemical waste. Do not incinerate.

EPA Hazardous Waste Number (RCRA): Not regulated

Since regulations vary, consult applicable regulations or authorities before disposal.

SECTION 14:TRANSPORT INFORMATION

ID Number(s):
41-4800-0197-7, 80-6300-0092-7, 80-6300-0093-5, 80-6300-0103-2, 80-6300-0154-5, 80-6300-0155-2, 80-6300-0171-9, CE-1006-9799-0, CE-1006-9800-6, CE-1006-9801-4

Not regulated per U.S. DOT, IATA or IMO.

These transportation classifications are provided as a customer service. As the shipper YOU remain responsible for complying with all applicable laws and regulations, including proper transportation classification and packaging. *3M's transportation classifications are based on product formulation, packaging, 3M policies and 3M's understanding of applicable current regulations. 3M does not guarantee the accuracy of this classification information. This information applies only to transportation classification and* ***not the packaging, labeling, or marking requirements.*** *The original 3M package is certified for U.S. ground shipment only. If you are shipping by air or ocean, the package may not meet applicable regulatory requirements.*

SECTION 15: REGULATORY INFORMATION

US FEDERAL REGULATIONS
Contact 3M for more information.

311/312 Hazard Categories:
Fire Hazard - No Pressure Hazard - No Reactivity Hazard - No Immediate Hazard - Yes Delayed Hazard - No

Section 313 Toxic Chemicals subject to the reporting requirements of that section and 40 CFR part 372 (EPCRA):

Ingredient	C.A.S. No	% by Wt
4,4'-ISOPROPYLIDENEDIPHENOL	80-05-7	1 - 4
CHROMIUM OXIDE (CR2O3) (CHROMIUM (III) COMPOUNDS)	1308-38-9	1 - 3

STATE REGULATIONS
Contact 3M for more information.

CHEMICAL INVENTORIES
The components of this product are in compliance with the chemical notification requirements of TSCA.

Contact 3M for more information.

INTERNATIONAL REGULATIONS
Contact 3M for more information.

This MSDS has been prepared to meet the U.S. OSHA Hazard Communication Standard, 29 CFR 1910.1200.

SECTION 16: OTHER INFORMATION

NFPA Hazard Classification

Health: 2 **Flammability:** 1 **Reactivity:** 0 **Special Hazards:** None

National Fire Protection Association (NFPA) hazard ratings are designed for use by emergency response personnel to address the hazards that are presented by short-term, acute exposure to a material under conditions of fire, spill, or similar emergencies. Hazard ratings are primarily based on the inherent physical and toxic properties of the material but also include the toxic properties of combustion or decomposition products that are known to be generated in significant quantities.

HMIS Hazard Classification

Health: 2 **Flammability:** 1 **Reactivity:** 0 **Protection:** X - See PPE section.

Hazardous Material Identification System (HMIS®) hazard ratings are designed to inform employees of chemical hazards in the workplace. These ratings are based on the inherent properties of the material under expected conditions of normal use and are not intended for use in emergency situations. HMIS® ratings are to be used with a fully implemented HMIS® program. HMIS® is a registered mark of the National Paint and Coatings Association (NPCA).

Revision Changes:
Copyright was modified.
Section 4: First aid for inhalation - medical assistance - was modified.
Section 4: First aid for inhalation - none - was added.
Section 14: ID Number Heading Template 1 was added.
Section 14: ID Number(s) Template 1 was added.
Section 2: Ingredient table was added.
Section 15: EPCRA 313 information was added.
Section 15: EPCRA 313 text was added.
Section 8: Exposure guidelines ingredient information was added.
Section 8: Exposure guidelines legend was added.
Section 8: Exposure guidelines data source legend was added.

DISCLAIMER: The information in this Material Safety Data Sheet (MSDS) is believed to be correct as of the date issued. 3M MAKES NO WARRANTIES, EXPRESSED OR IMPLIED, INCLUDING, BUT NOT LIMITED TO, ANY IMPLIED WARRANTY OF MERCHANTABILITY OR FITNESS FOR A PARTICULAR PURPOSE OR COURSE OF PERFORMANCE OR USAGE OF TRADE. User is responsible for determining whether the 3M product is fit for a particular purpose and suitable for user's method of use or application. Given the variety of factors that can affect the use and application of a 3M product, some of which are uniquely within the user's knowledge and control, it is essential that the user evaluate the 3M product to determine whether it is fit for a particular purpose and suitable for user's method of use or application.

3M provides information in electronic form as a service to its customers. Due to the remote possibility that electronic transfer may have resulted in errors, omissions or alterations in this information, 3M makes no representations as to its completeness or accuracy. In addition, information obtained from a database may not be as current as the information in the MSDS available directly from 3M.

3M MSDSs are available at www.3M.com

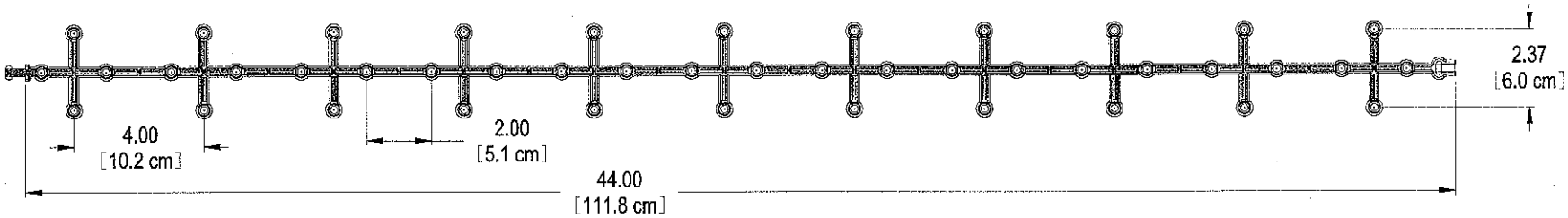

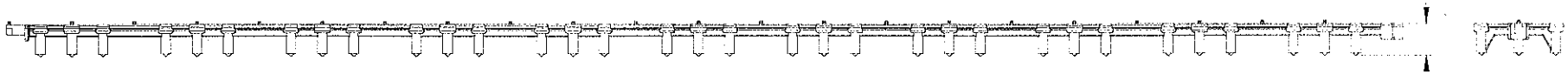

POLYLOK 44" SLAB BOLSTER
PART NO. 3063-L SERIES
MATERIAL - POLYCARBONATE
COLOR - GREY

PART NO.	COVER
3063-L75	3/4"
3063-L1	1"
3063-L125	1 1/4"
3063-L15	1 1/2'
3063-L175	1 3/4"
3063-L2	2"
3063-L225	2 1/4"
3063-L25	2 1/2"
3063-L275	2 3/4"
3063-L3	3"

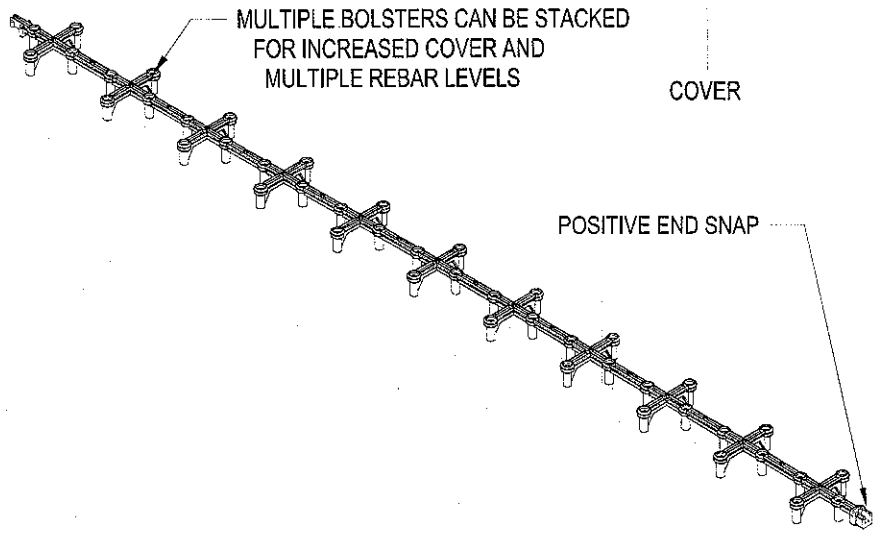

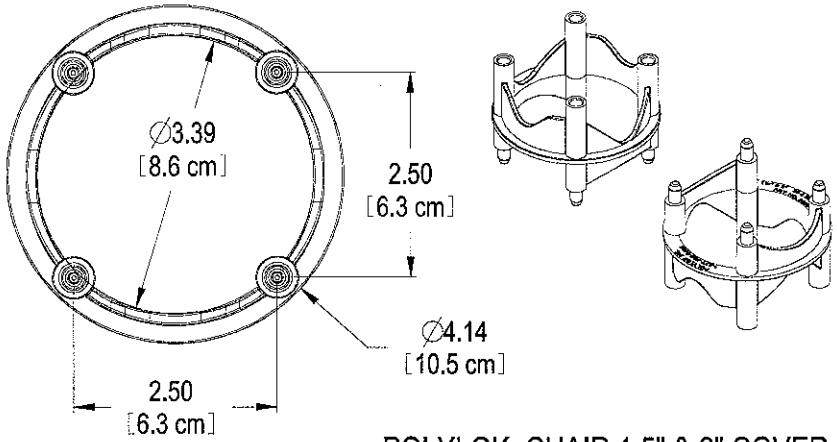

POLYLOK CHAIR 1.5" & 2" COVER
PART NO. 3058-SC
COLOR - GREY
MATERIAL - PC / ABS

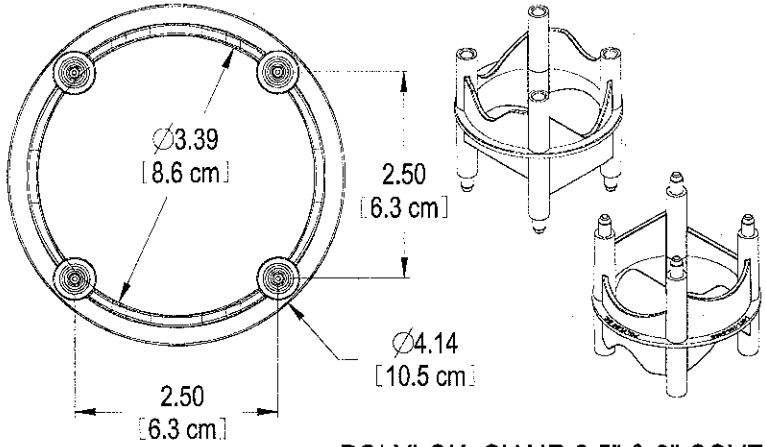

POLYLOK CHAIR 2.5" & 3" COVER
PART NO. 3059-SC
COLOR - GREY
MATERIAL -PC / ABS

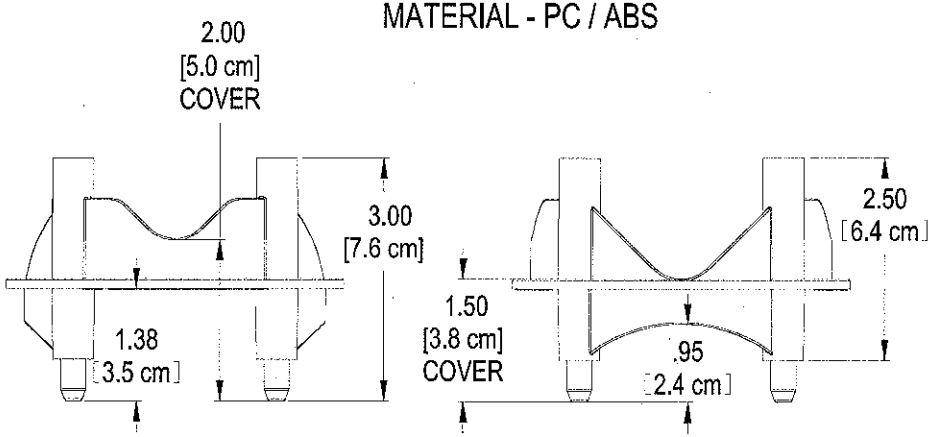

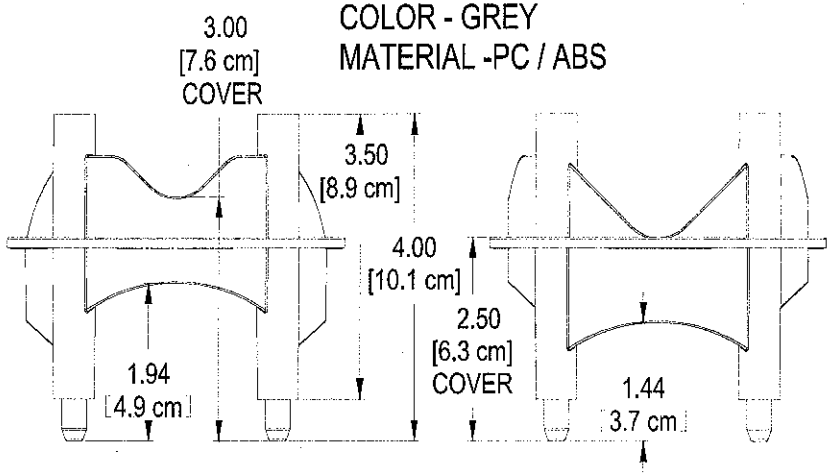

S.D. Ireland
Concrete Construction Corporation
802-863-6222 • Fax: 802-860-1528
www.sdireland.com

CONCRETE MIX DESIGN

6000 psi

SCC

SDI MIX CODE: P60TER

DATE: January 14, 2013 **PLANT:** Burlington, VT

PROJECT: General DOT Precast - 2013

FINE AGGREGATE: ASTM C 33	Source:	Hinesburg Sand & Gravel
	Specific Gravity:	2.65 (Abs.: 1.34%)
	Fineness Modulus:	2.65
COARSE AGGREGATE#1: ASTM C 33	Source:	S.D. Ireland, Brownell Quarry
	Specific Gravity:	2.80 (Abs.: 0.30%)
	Description	3/4" 100% Crushed Stone (Size #67)
COARSE AGGREGATE#2: ASTM C 33	Source:	Hinesburg Sand & Gravel
	Specific Gravity:	2.64 (Abs.: 1.72%)
	Description	3/8" to No.8 Round Stone (Size #8)
CEMENT:	Ternary Blend Cement; Lefarge North America Lakes and Seaway Re St. Constant, Quebec Specific Gravity: 2.98	
ADMIXTURES:	High Range Water Reducer (HRWR): Glenium 7500; BASF Air Entraining Agent: Darex II AEA; Grace Concrete Chemicals	

CONSTITUENTS (LBS. /YD³)

		Abs.Vol.
Coarse Aggregate (SSD) #1	1500	8.59
Coarse Aggregate (SSD) #2	250	1.52
Fine Aggregate (SSD)	1019	6.16
Cement	800	4.30
Water	300	4.81
Air Content (Entrained)	6.0%	1.62
Total	3869	27.00ft³

MIX PROPERTIES

Water Cement Ratios: 0.37
Dry Unit Weight: 143 ± pcf
Entrained Air Content: 5.0 % – 9.0%

***ADMIXTURE(S) DOSEAGE (OZ. /YD³)**

Glenium 7500	(HRWR)	48 - 64
Darex II AEA		2.5

*Admixture dosage rates are subject to change.

Sand	Hinesburg C33	Sand
Specific Gravity		
Date:	1/8/2013	
Initials:	NBP	

493.4	A=Weight of oven-dry test sample in air
659.9	B=Weight of pycnometer filled with water
500	S=Weight of the saturated surface-dry specimen
970.9	C=Weight of pycnometer with specimen and water to calibration mark

Bulk Specific Gravity
2.61

Apparent Specific Gravity
2.71

Absorption %
1.34

Bulk Specific Gravity SSD
2.65

Stone Hinesburg Sand & Gravel 3/8" Round Stone (ASTM C33 Size #8 Concrete Stone)
Specific Gravity
Date: 1/07/20123
Initials: NBP

1740	A=Weight of oven-dry test sample in air
1770	B=Weight of saturated-surface-dry test sample in air
1100	C=Weight of saturated test sample in water

Bulk Specific Gravity	
A/(B-C)	2.60

Bulk Specific Gravity SSD	
B/(B-C)	2.64

Apparent Specific Gravity	
A/(A-C)	2.72

Absorption %	
<(B-A)/A>*	1.72

Stone SDI Brownell Quarry; Williston,VT (ASTM C33 Size #67 Concrete Stone)
Specific Gravity
Date: 1/07/20123
Initials: NBP

4142.8 A=Weight of oven-dry test sample in air

4155.3 B=Weight of saturated-surface-dry test sample in air

2669.8 C=Weight of saturated test sample in water

Bulk Specific Gravity

A/(B-C) 2.79

Bulk Specific Gravity SSD

B/(B-C) 2.80

Apparent Specific Gravity

A/(A-C) 2.81

Absorption %

<(B-A)/A>* 0.30

Cement Mill Test Report

Month of Issue: November 2012

Plant:	**Montreal East, Quebec**
Product:	**Ternary Blend Cement - IT S(22) P (5), (TERCEM 3000)**
Silo:	**Service Silo**
Manufactured:	**October 2012**

ASTM C 595-11 and AASHTO M 240-09 Standard Requirements

CHEMICAL REQUIREMENTS

	Spec limit	Test Result
Rapid Method, X-Ray *(C 114)*		
SiO2 (%)	---	26.3
Al2O3 (%)	---	5.5
Fe2O3 (%)	---	2.6
CaO (%)	---	53.4
MgO (%)	---	4.5
SO3 (%)*	3.0 max	4.0
Loss on ignition (%)	3.0 max	1.5
Sulfide Sulfur (S) (%)	2.0 max	0.8
Na2Oeq (%) from cement portion	---	0.63
Na2Oeq (%) from cement, SF and slag blend	---	0.86

PHYSICAL REQUIREMENTS

	Spec limit	Test Result
Air content of mortar (%) *(C 185)*	12 max	6
Blaine Fineness (m2/kg) *(C 204)*	---	552
Residue retained on a 45 µm sieve (%) (C430)	---	7.8
Autoclave expansion (%) *(C 151)***	0.80 max	-0.02
Compressive strength (PSI) *(C 109)*		
3 days	1890 min	3370
7 days	2900 min	4580
28 days	3620 min	6525
Time of setting (minutes)		
Vicat Initial *(C 191)*	45 - 420	159
Sulfate Expansion *(C 1038)*	---	0.005
Water Extractable Sulfate *(C 265)***	0.5 g/L max	0.32

* May exceed 4.0% SO3 maximum if the C-265 test result is not greater than 0.5 g/L.

**Current Production run not available - most recent provided.

This product meets the requirements of NYSDOT Item 701-03.

For additional information on this cement test report, please contact our regional technical representative David Johns at (484) 695-5902.

Certified By:

Pascale Poulin

Pascale Poulin - Quality Coordinator
November 15, 2012

ECAN BU - St-Constant Plant
1 Chemin Lafarge, St-Constant
Phone: 450-632-7750 #218