T. Buck Construction, Inc.

249 Merrow Road, Auburn, Maine 04210-8319
(207) 783-6223 * (FAX) 783-3970

Vermont Agency of Transportation
RECEIVED
Jamaica ER BHF 013-1(16) PT Submittal Review.pdf
CK'D BY VHB OK'D BY JTS
April 19, 2013
RESUBMIT NO Approved
BY KMH DATE 04/24/13

POST TENSIONING SUBMITTAL

Vermont Agency of Transportation

Vermont Agency of Transportation
Bridge rehabilitation in the town of Jamaica, VT
ER BHF 013-1(16)

STATE OF VERMONT
ERIC T. CALDERWOOD
NO. 8711
Structural
LICENSED
PROFESSIONAL ENGINEER

Submitted: _____

Table of Contents:

Cover sheet	1/120
General Procedure	2/120
DSI Shop Details & Calculations for Post Tensioning	3/120-14/120
	(1/12-12/12)
Shop Details	(3/12-8/12)
Calculations	(9/12-12/12)
Memo for Revised PT Submittal including	15/120 - 3/120
Standard Calculations for PT anchorage	44/120 - 50/120
Product Testing Reports, Certification Letters & Accreditation Reports	51/120 - 119/120
Certification letter job specific	120/120

* See attached sheet for approval stamp.
GSG 4/24/13

POST TENSIONING SUBMITTAL

Vermont Agency of Transportation

Vermont Agency of Transportation
Bridge rehabilitation in the town of Jamaica, VT
ER BHF 013-1(16)

STATE OF VERMONT
ERIC T. CALDERWOOD
No. 8711
Structural
LICENSED
PROFESSIONAL ENGINEER

Submitted: _____

Table of Contents:

Cover sheet	1/120
General Procedure	2/120
DSI Shop Details & Calculations for Post Tensioning	3/120-14/120
	(1/12-12/12)
Shop Details	(3/12-8/12)
Calculations	(9/12-12/12)
Memo for Revised PT Submittal including	15/120 - 3/120
Standard Calculations for PT anchorage	44/120 - 50/120
Product Testing Reports, Certification Letters & Accreditation Reports	51/120 - 119/120
Certification letter job specific	120/120

SUBMITTAL REVIEW

☑ Reviewed and approved but only for conformance to the Construction Contract Documents.

☐ Revise and Resubmit

Corrections or comments made during this review do not relieve the Contractor or his Designer from compliance with professional requirements or for responsibility for the adequacy of the submittal information. This check is only for review of general conformance with industry standards and general compliance with the information given in the Contract Documents. VHB has not conducted a detailed review of the submittal and has not performed calculations or assessed the adequacy of loads, design criteria, quantities, dimensions, etc. Approval of the submittal does not constitute VHB's approval of any construction means, methods or techniques. These remain the responsibility of the Contractor.

VHB
Vanasse Hangen Brustlin, Inc.

Job Number: 57550.00
Reviewed By: G.S. Goodrich
Date: 4-24-2013

Note: This stamp is for approval of P/T submittal by T. Buck dated 4-17-2013, sheets 1-120 inclusive.

General Procedure

1) Incorporate applicable materials and cast concrete for Precast Sub Cap. This will be supplied by SD Ireland.

2) Form and Place Pier Stem with pre tied cage that includes vertical thread bars. This step is critical to ensure proper orientation of the precast sub cap. We will ensure proper rotational location of the pre tied cage so that the vertical thread bars line up with the sleeves in the precast sub cap.

3) Set precast sub cap on stem using applicable shims to ensure correct elevations. We will install anchor plates and nuts to the vertical thread bars and tighten to "snug tight." We will grout the vertical shear key between the column and precast sub cap. The couplers that will accept the short piece of thread bars will also be installed in this step.

4) Post tension bars 1 & 2 in sub cap. Once bars are tensioned, we will grout each bar in accordance with an approved grouting plan that will be submitted under separate cover. We will be utilizing a subcontractor to tension the bars and supply/install the grout.

5) Erect Structural Steel. We will shim girders to proper elevation.

6) Post Tension Bars 3, 4, &5 in the precast sub cap. Once the bars are tensioned, we will grout each bar in the same manner we completed bars 1 & 2.

7) The pour backs will be installed to "seal" and cover the post tensioning ports at each end of the sub cap. An approved material will be used from the list provided in the post tensioning specification.

8) The pier cap will be formed and placed using the approved 6,000 psi concrete. The remaining post tensioning ducts will be installed and verified prior to placing the concrete.

9) After the pier cap has cured to a minimum strength of 4,000 psi, the bars will be post tensioned in the sequence shown on plan sheet 38 of 85 and the each bar will be grouted after it is tensioned. The ends of the pier cap will be covered using the same material used in the pour backs on the sub cap.

10) The bridge deck will be formed / placed and the project will progress from there.

SHOP DRAWINGS AND CALCULATIONS

For

JAMAICA BRIDGE
ER-BRF 013-1(16)

1-3/8” GRADE 150 THREADBAR FOR PIER CAP POST-TENSIONING AND PIER VERTICAL REINFORCEMENT

PREPARED FOR

T. BUCK CONSTRUCTION, INC.

RE-SUBMITTED FOR APPROVAL

March 22, 2013

INDEX

PAGE NO.:	CONTENTS:	
Page 3	Precast Sub-Cap – 1-3/8” Threadbar Assembly	PT-1
Page 4	Pier Cap – 1-3/8” Threadbar Assembly	PT-2
Page 5	1-3/8” Vertical Threadbar Assembly	PT-3
Page 6	Pier Schematic	PT-4
Page 7	Precast Sub-Cap – PT Threadbar Layouts and Details	PT-5
Page 8	Pier Cap – PT Threadbar Layouts and Details	PT-6
Page 9	Stressing Calculations.	

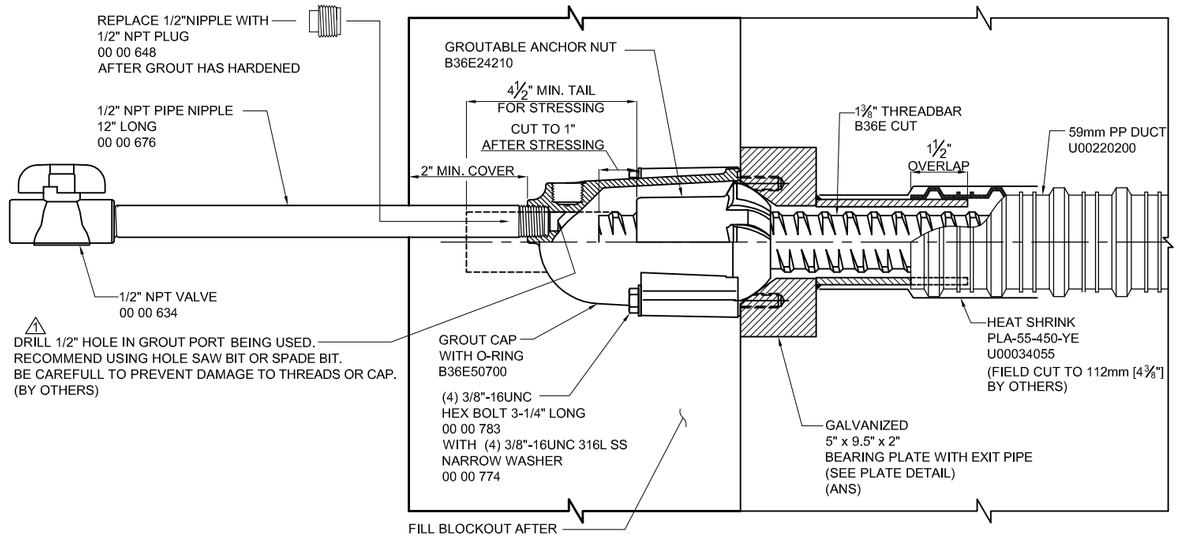

STRESSING END ANCHOR DETAIL
ELEVATION

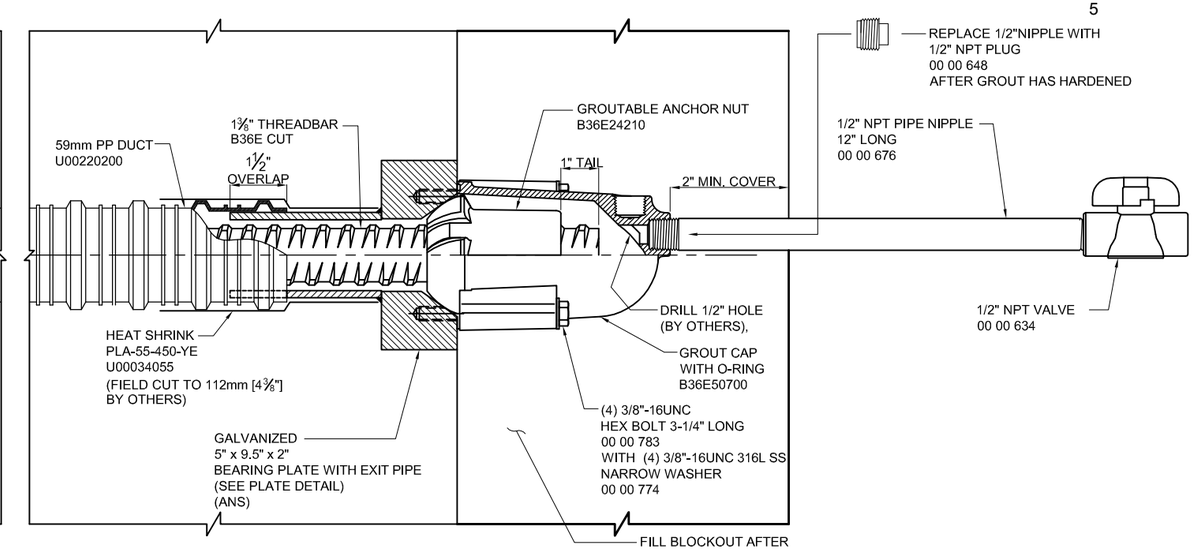

DEAD END ANCHOR DETAIL
ELEVATION

NOTES:

1. REQUIRED REINFORCING BARS ARE NOT SHOWN ON THIS DRAWING.
2. MAXIMUM ANGULAR MISALIGNMENT WHEN USING ANCHOR NUT: ±2°.
3. 1 DUCT IS DELIVERED IN STRAIGHT SECTIONS AND IS NOT INTENDED TO BE COILED.
4. DUCT TO BE SUPPORTED EVERY 2 FT. MAXIMUM.

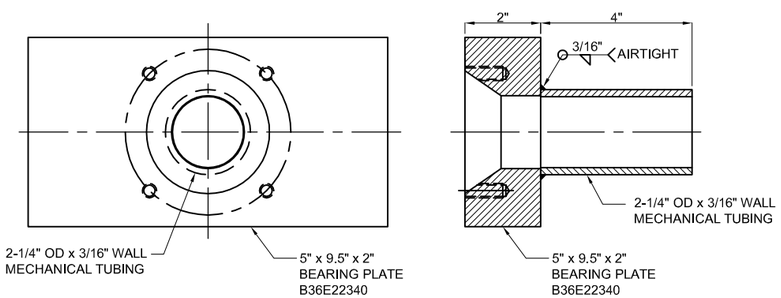

NOTE: GALVANIZED AS PER ASTM A123 AFTER WELDING.

GALVANIZED BEARING PLATE
(ANS)

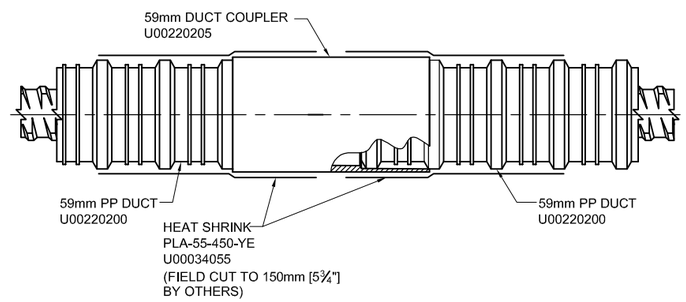

DUCT COUPLING DETAIL

GENERAL NOTES:

1. BARS TO BE 1-3/8"Ø DYWIDAG THREADBAR WITH A MINIMUM ULTIMATE STRESS OF 150ksi CONFORMING TO STRENGTH REQUIREMENTS OF ASTM A-722 TYPE II. 1
2. ANCHORAGES TO BE DYWIDAG STANDARD AND GALVANIZED.
3. THE THREADBAR SHALL BE CAREFULLY UNLOADED AND STORED ON THE PROJECT SITE IN A MANNER TO AVOID DAMAGE AND CORROSION.
4. THE CONTRACTOR SHALL EXERCISE CARE TO ENSURE THAT THE THREADBARS AND OTHER COMPONENTS WHEN INCORPORATED INTO THE WORK ARE FREE FROM RUST, DIRT, PAINT, OIL, GREASE OR OTHER FOREIGN SUBSTANCE.
5. SHOP DRAWINGS REFER TO POST-TENSIONED SYSTEM DETAILS ONLY. FOR REINFORCEMENT DETAILS, SEE CONTRACT DRAWINGS.
6. NO WELDING SHALL BE PERFORMED IN THE VICINITY OF HIGH TENSILE STEEL.
7. ALL THREADBARS ARE ONE END STRESS ONLY, U.N.O.

THREADBAR STRESSING PROCEDURE:

1. INSPECT BAR STRESSING EXTENSION AND NUT TO BE SURE THEY ARE CLEAN AND FREE OF RUST AND OF PROPER LENGTH.
2. TIGHTEN ANCHOR NUT HAND. MEASURE AND RECORD LENGTH OF BAR EXTENDING OUT OF THE ANCHOR NUT.
3. THREAD PULL ROD ONTO THE BAR.
4. PLACE JACK OVER PULL ROD.
5. SCREW STRESSING NUT ONTO PULL ROD TILL IT BEARS ON THE BACK OF THE JACK.
6. STRESS BAR TO 20% OF JACKING FORCE AS PER SEQUENCE SHOWN IN THE TABLE AND MARK THE BAR FOR ELONGATION MEASUREMENT.
7. STRESS BAR TO 100% OF JACKING FORCE AS PER SEQUENCE SHOWN IN THE TABLE.
8. TIGHTEN NUT WITH RACHET HANDLE. (DO NOT USE CHEATER BAR)
9. RELEASE PRESSURE. REMOVE JACK.
10. MEASURE AND RECORD ELONGATIONS.

MATERIAL LIST

PART NO.	DESCRIPTION	MATERIAL SPECIFICATION
B36E CUT	1-3/8" Ø THREADBAR	ASTM A722 TYPE II STEEL
ANS	5" x 9.5" x 2" BEARING PLATE (USING B36E22340) WITH EXIT 2 1/4" x 3/16" WALL 4" LONG MECHANICAL TUBING PIPE & BOLT HOLES, GALV.	STEEL PLATE, ASTM A36 (GALV.)
B36E24210	GROUTABLE ANCHOR NUT	STEEL FORGING, ASTM A521-76 (1987) NORMALIZED BHN=180-220
B36E50700	BAR GROUT CAP WITH O-RING	NYLON 6, 20% GLASS FIBER FILLED CAP
U00220200	59mm CORRUGATED PP DUCT	PPX3
U00220205	59mm DUCT COUPLER	HDPE
00 00 783	3/8"-16UNC HEX BOLT 3-1/4" LONG	
00 00 774	NARROW WASHER FOR 3/8"-16UNC HEX BOLT	316L STAINLESS STEEL
00 00 676	1/2" NPT NIPPLE, 12" LONG	SCH 40 BLACK WELDED STEEL
00 00 634	1/2" NPT VALVE	PVC
00 00 648	1/2" NPT PLUG	HDPE
U00034055	HEAT SHRINK, PLA-55-450-YE	CANUSA

WARNING: READ AND COMPLY WITH ALL APPLICABLE SAFETY AND OPERATING INSTRUCTIONS AND WARNINGS FOR THREADBAR STRESSING BEFORE STARTING ANY WORK OR OPERATION.

CAUTION WHEN USING HIGH STRENGTH DYWIDAG THREADBAR® (GRADE 150)
DO NOT WELD TO BAR.
DO NOT USE BAR AS GROUND CONNECTION FOR WELDING.
DO NOT ALLOW HOT SLAG OR SPARKS TO TOUCH BAR.
DO NOT DAMAGE BAR SURFACE.
DO NOT USE BARS WITH KINKS OR SHARP BENDS.
FAILURE TO HEED THIS WARNING COULD CAUSE BAR TO BREAK RESULTING IN INJURY OR DAMAGE

CAUTION: WHEN PRESSURIZING GROUT CAPS, DO NOT STAND BEHIND CAPS!

OWNER: STATE OF VERMONT, AGENCY OF TRANSPORTATION
CONTRACTOR: T. BUCK CONSTRUCTION, INC.
PROJECT: **JAMAICA, ER-BRF 013-1(16)**

PRECAST SUB-CAP
1-3/8" THREADBAR ASSEMBLY

DATE: 02/06/13 | DWG: I.TIRA | CHK: EZ | APP: EZ

THIS DRAWING, THE PERTINENT ENCLOSURES, DESCRIPTIONS, CALCULATIONS ETC. AND THEIR CONTENTS ARE THE PROPERTY OF **DYWIDAG SYSTEMS INTERNATIONAL, USA, INC.** THEY ARE NOT ALLOWED TO BE DUPLICATED WITHOUT OUR PERMISSION. THEY ARE ALSO NOT TO BE SHOWN OR EXPLAINED FOR ANY REASON TO A THIRD PARTY OTHER THAN FOR REASONS EXPRESSLY INTENDED BY **DSI's** SUBMITTAL TO THE ORIGINAL RECEIVER. THEY HAVE TO BE RETURNED UPON REQUEST.

DYWIDAG SYSTEMS INTERNATIONAL, USA INC. DOES NOT ASSUME ANY LIABILITY FOR THE DESIGN OF THIS STRUCTURE. THIS SHOP DRAWING IS INTENDED TO PROVIDE POST TENSIONING DETAILS ONLY.

WEIGHT	REV.	DATE	ISSUE DESCRIPTION	NAME	CHKD.	JOB NUMBER
	0	02/14/13	FOR APPROVAL	IT	EZ	J092604
	1	03/22/13	FOR APPROVAL	IT	EZ	
SCALE 1 : 4						DRAWING NUMBER: PT-1

DYWIDAG-SYSTEMS INTERNATIONAL, USA, INC.
POST TENSIONING / REINFORCING UNIT PHONE: 630-739-1100
320 MARMON DRIVE - BOLINGBROOK, IL FAX: 630-739-1405

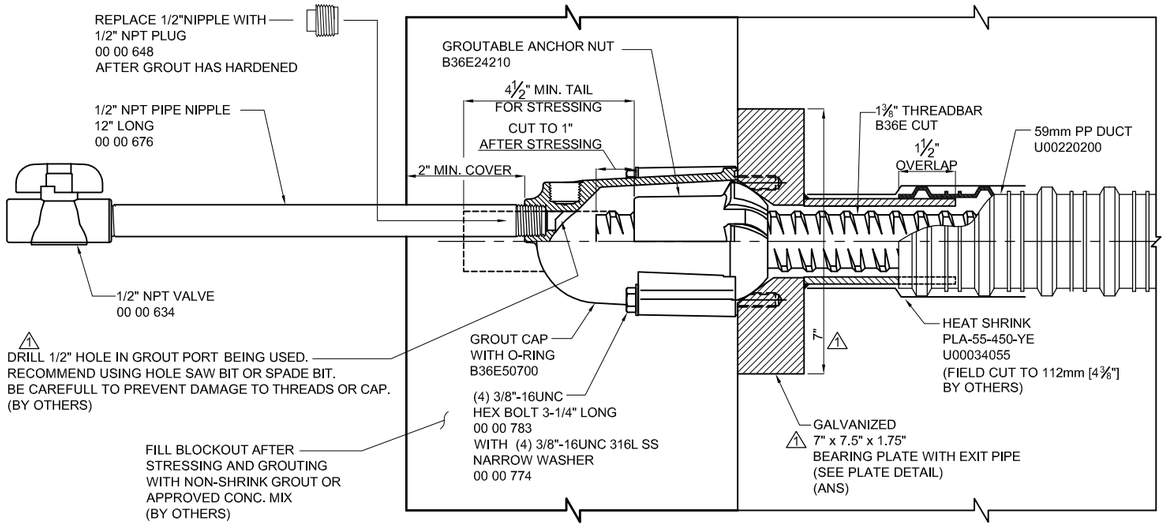

STRESSING END ANCHOR DETAIL
ELEVATION

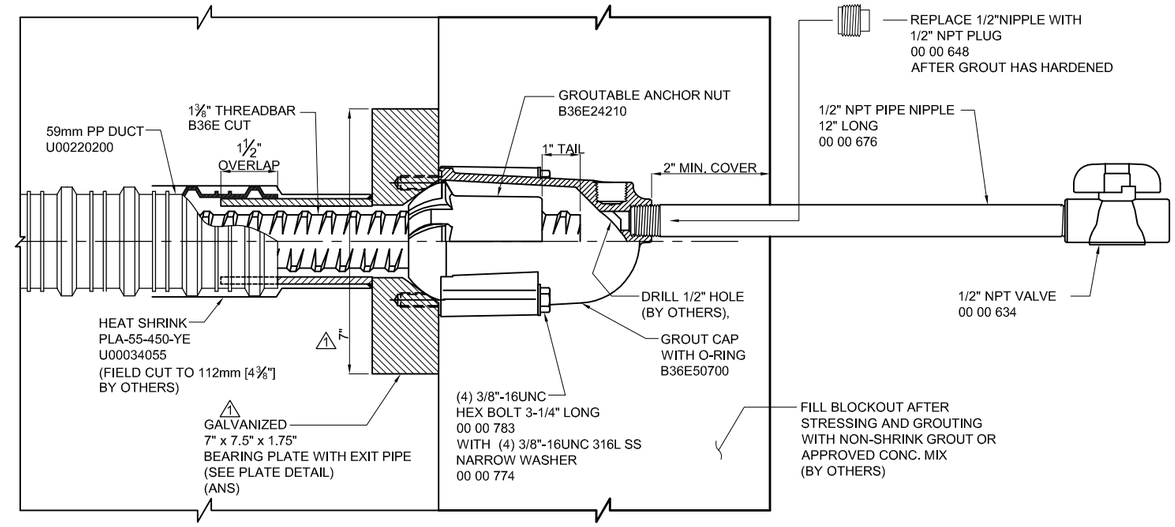

DEAD END ANCHOR DETAIL
ELEVATION

NOTES:

1. REQUIRED REINFORCING BARS ARE NOT SHOWN ON THIS DRAWING.
2. MAXIMUM ANGULAR MISALIGNMENT WHEN USING ANCHOR NUT: ±2°.
3. DUCT IS DELIVERED IN STRAIGHT SECTIONS AND IS NOT INTENDED TO BE COILED.
4. DUCT TO BE SUPPORTED EVERY 2 FT. MAXIMUM.

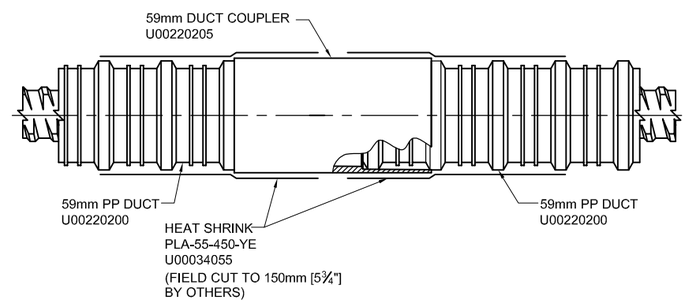

DUCT COUPLING DETAIL

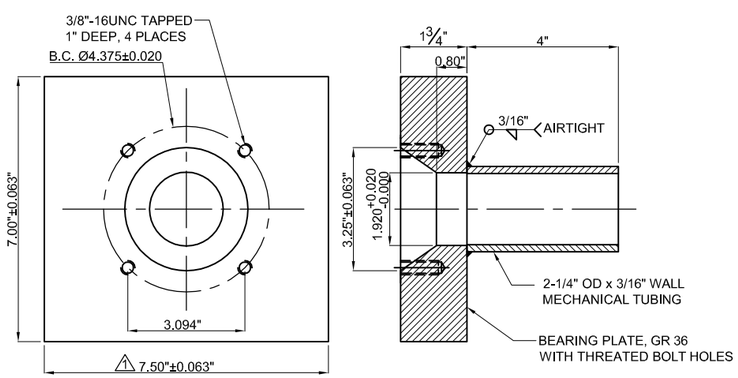

NOTE: GALVANIZED AS PER ASTM A123 AFTER WELDING.

GALVANIZED BEARING PLATE
(ANS)

GENERAL NOTES:

1. BARS TO BE 1-3/8"Ø DYWIDAG THREADBAR WITH A MINIMUM ULTIMATE STRESS OF 150ksi CONFORMING TO STRENGTH REQUIREMENTS OF ASTM A-722 TYPE II.
2. ANCHORAGES TO BE DYWIDAG STANDARD AND GALVANIZED.
3. THE THREADBAR SHALL BE CAREFULLY UNLOADED AND STORED ON THE PROJECT SITE IN A MANNER TO AVOID DAMAGE AND CORROSION.
4. THE CONTRACTOR SHALL EXERCISE CARE TO ENSURE THAT THE THREADBARS AND OTHER COMPONENTS WHEN INCORPORATED INTO THE WORK ARE FREE FROM RUST, DIRT, PAINT, OIL, GREASE OR OTHER FOREIGN SUBSTANCE.
5. SHOP DRAWINGS REFER TO POST-TENSIONED SYSTEM DETAILS ONLY. FOR REINFORCEMENT DETAILS, SEE CONTRACT DRAWINGS.
6. NO WELDING SHALL BE PERFORMED IN THE VICINITY OF HIGH TENSILE STEEL.
7. ALL THREADBARS ARE ONE END STRESS ONLY, U.N.O.

THREADBAR STRESSING PROCEDURE:

1. INSPECT BAR STRESSING EXTENSION AND NUT TO BE SURE THEY ARE CLEAN AND FREE OF RUST AND OF PROPER LENGTH.
2. TIGHTEN ANCHOR NUT HAND. MEASURE AND RECORD LENGTH OF BAR EXTENDING OUT OF THE ANCHOR NUT.
3. THREAD PULL ROD ONTO THE BAR.
4. PLACE JACK OVER PULL ROD.
5. SCREW STRESSING NUT ONTO PULL ROD TILL IT BEARS ON THE BACK OF THE JACK.
6. STRESS BAR TO 20% OF JACKING FORCE AS PER SEQUENCE SHOWN IN THE TABLE AND MARK THE BAR FOR ELONGATION MEASUREMENT.
7. STRESS BAR TO 100% OF JACKING FORCE AS PER SEQUENCE SHOWN IN THE TABLE.
8. TIGHTEN NUT WITH RACHET HANDLE. (DO NOT USE CHEATER BAR)
9. RELEASE PRESSURE. REMOVE JACK.
10. MEASURE AND RECORD ELONGATIONS.

MATERIAL LIST

PART NO.	DESCRIPTION	MATERIAL SPECIFICATION
B36E CUT	1-3/8" Ø THREADBAR	ASTM A722 TYPE II STEEL
ANS	7" x 7.5" x 1.75" BEARING PLATE WITH EXIT 2 1/4" x 3/16" WALL 4" LONG MECHANICAL TUBING PIPE & BOLT HOLES, GALV.	STEEL PLATE, ASTM A36 (GALV.)
B36E24210	GROUTABLE ANCHOR NUT	STEEL FORGING, ASTM A521-76 (1987) NORMALIZED BHN=180-220
B36E50700	BAR GROUT CAP WITH O-RING	NYLON 6, 20% GLASS FIBER FILLED CAP
U00220200	59mm CORRUGATED PP DUCT	PPX3
U00220205	59mm DUCT COUPLER	HDPE
00 00 783	3/8"-16UNC HEX BOLT 3-1/4" LONG	
00 00 774	NARROW WASHER FOR 3/8"-16UNC HEX BOLT	316L STAINLESS STEEL
00 00 676	1/2" NPT NIPPLE, 12" LONG	SCH 40 BLACK WELDED STEEL
00 00 634	1/2" NPT VALVE	PVC
00 00 648	1/2" NPT PLUG	HDPE
U00034055	HEAT SHRINK, PLA-55-450-YE	CANUSA

WARNING: READ AND COMPLY WITH ALL APPLICABLE SAFETY AND OPERATING INSTRUCTIONS AND WARNINGS FOR THREADBAR STRESSING BEFORE STARTING ANY WORK OR OPERATION.

CAUTION WHEN USING HIGH STRENGTH DYWIDAG THREADBAR® (GRADE 150)
DO NOT WELD TO BAR.
DO NOT USE BAR AS GROUND CONNECTION FOR WELDING.
DO NOT ALLOW HOT SLAG OR SPARKS TO TOUCH BAR.
DO NOT DAMAGE BAR SURFACE.
DO NOT USE BARS WITH KINKS OR SHARP BENDS.
FAILURE TO HEED THIS WARNING COULD CAUSE BAR TO BREAK RESULTING IN INJURY OR DAMAGE

CAUTION: WHEN PRESSURIZING GROUT CAPS, DO NOT STAND BEHIND CAPS!

OWNER: STATE OF VERMONT, AGENCY OF TRANSPORTATION
CONTRACTOR: T. BUCK CONSTRUCTION, INC.
PROJECT: **JAMAICA, ER-BRF 013-1(16)**

PIER CAP
1-3/8" THREADBAR ASSEMBLY

DATE: 02/06/13 | DWG: I.TIRA | CHK: EZ | APP: EZ

THIS DRAWING, THE PERTINENT ENCLOSURES, DESCRIPTIONS, CALCULATIONS ETC. AND THEIR CONTENTS ARE THE PROPERTY OF **DYWIDAG SYSTEMS INTERNATIONAL, USA, INC.** THEY ARE NOT ALLOWED TO BE DUPLICATED WITHOUT OUR PERMISSION. THEY ARE ALSO NOT TO BE SHOWN OR EXPLAINED FOR ANY REASON TO A THIRD PARTY OTHER THAN FOR REASONS EXPRESSLY INTENDED BY **DSI's** SUBMITTAL TO THE ORIGINAL RECEIVER. THEY HAVE TO BE RETURNED UPON REQUEST.

DYWIDAG SYSTEMS INTERNATIONAL, USA INC. DOES NOT ASSUME ANY LIABILITY FOR THE DESIGN OF THIS STRUCTURE. THIS SHOP DRAWING IS INTENDED TO PROVIDE POST TENSIONING DETAILS ONLY.

WEIGHT	REV.	DATE	ISSUE DESCRIPTION	NAME	CHKD.	JOB NUMBER
	0	02/14/13	FOR APPROVAL	IT	EZ	J092604
	1	03/22/13	FOR APPROVAL	IT	EZ	
SCALE 1 : 4						DRAWING NUMBER: PT-2

DYWIDAG-SYSTEMS INTERNATIONAL, USA, INC.
POST TENSIONING / REINFORCING UNIT PHONE: 630-739-1100
320 MARMON DRIVE - BOLINGBROOK, IL FAX: 630-739-1405

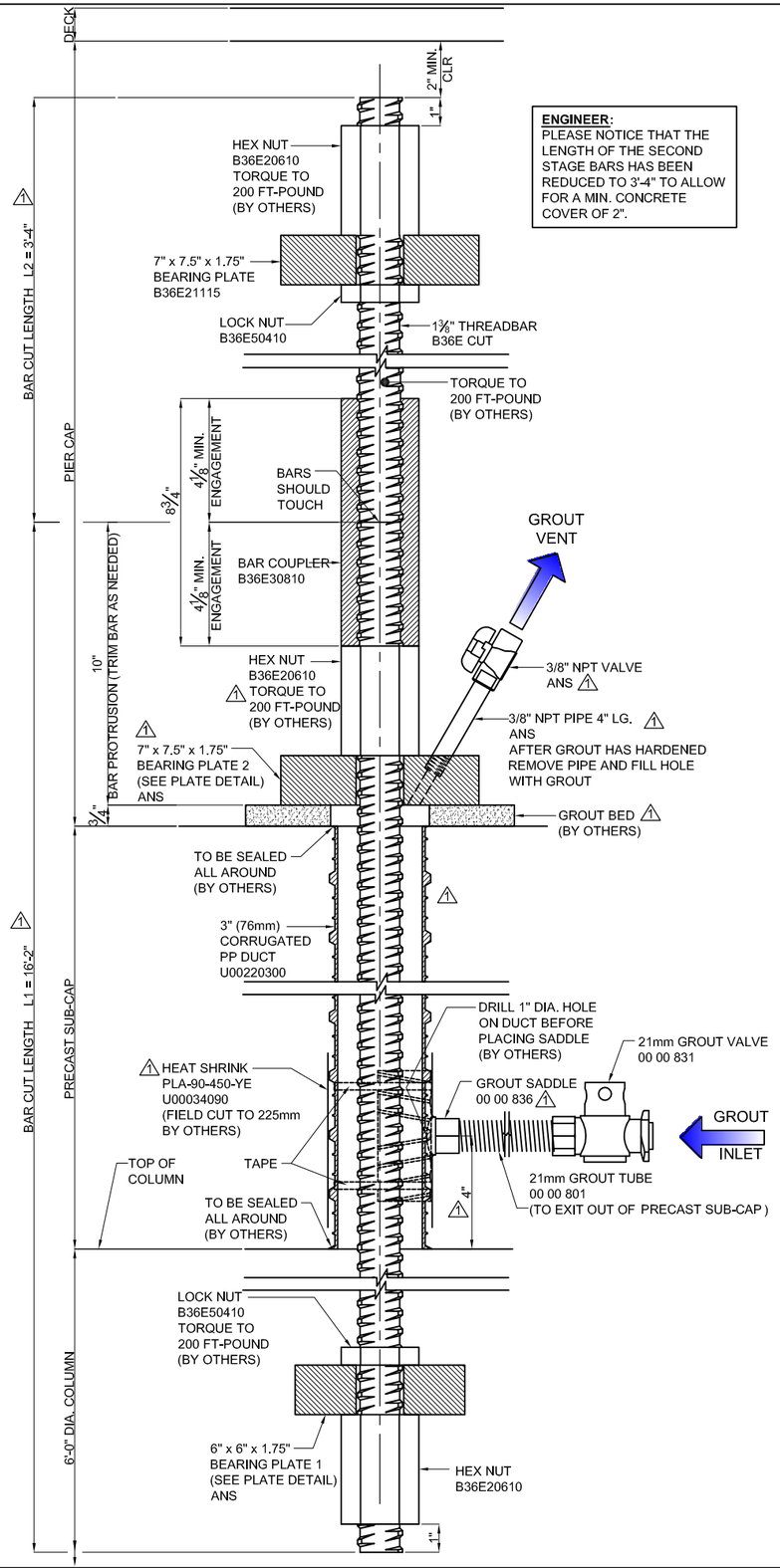

ENGINEER:
PLEASE NOTICE THAT THE LENGTH OF THE SECOND STAGE BARS HAS BEEN REDUCED TO 3'-4" TO ALLOW FOR A MIN. CONCRETE COVER OF 2".

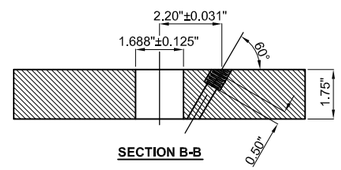

SECTION B-B

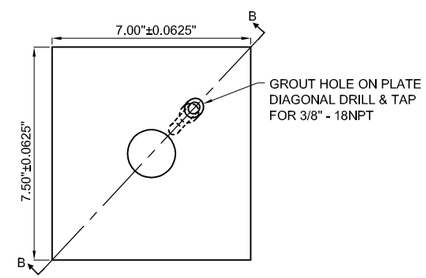

BEARING PLATE 2 GR 36
ANS

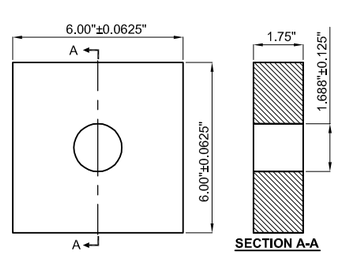

SECTION A-A

BEARING PLATE 1 GR 36
ANS

GENERAL NOTES:

1. BARS TO BE 1-3/8"Ø DYWIDAG THREADBAR WITH A MINIMUM ULTIMATE STRESS OF 150ksi CONFORMING TO STRENGTH REQUIREMENTS OF ASTM A-722 TYPE II.
2. ANCHORAGES TO BE DYWIDAG STANDARD.
3. THE THREADBAR SHALL BE CAREFULLY UNLOADED AND STORED ON THE PROJECT SITE IN A MANNER TO AVOID DAMAGE AND CORROSION.
4. THE CONTRACTOR SHALL EXERCISE CARE TO ENSURE THAT THE THREADBARS AND OTHER COMPONENTS WHEN INCORPORATED INTO THE WORK ARE FREE FROM RUST, DIRT, PAINT, OIL, GREASE OR OTHER FOREIGN SUBSTANCE.
5. SHOP DRAWINGS REFER TO THREADBAR SYSTEM DETAILS ONLY. FOR REINFORCEMENT AND INSTALLATION DETAILS, SEE CONTRACT DRAWINGS.
6. NO WELDING SHALL BE PERFORMED IN THE VICINITY OF HIGH TENSILE STEEL.
7. TORQUING AS INDICATED IS CRITICAL FOR PROPER PERFORMANCE OF THE THREADBAR SYSTEM.

MATERIAL LIST

	PART NO.	DESCRIPTION	MATERIAL SPECIFICATION
	B36E CUT	1-3/8" Ø THREADBAR	ASTM A722 TYPE II STEEL
	B36E21115	7" x 7.5" x 1.75" BEARING PLATE	STEEL PLATE, ASTM A36
	ANS	6" x 6" x 1.75" BEARING PLATE 1	
△1	ANS	7" x 7.5" x 1.75" BEARING PLATE 2	
	B36E20610	HEX NUT	STEEL FORGING, ASTM A521-76 (1987) NORMALIZED BHN=180-220
	B36E50410	LOCK NUT	SEAMLESS MECHANICAL TUBING C1026 CD
	B36E30810	BAR COUPLER	STEEL BAR, COLD DRAWN, AISI1117
△1	00 00 836	GROUT SADDLE	HDPE
	00 00 801	21mm GROUT TUBE	HDPE
	00 00 831	21mm GROUT VALVE	PLASTIC
	U00220300	3" (76mm) CORRUGATED PP DUCT	PPX3
△1	ANS	3/8" NPT PIPE 4" LG.	SCH 80 PVC
△1	ANS	3/8" NPT VALVE	PVC
△1	U00034090	HEAT SHRINK PLA-90-450-YE	CANUSA

OWNER: STATE OF VERMONT, AGENCY OF TRANSPORTATION

CONTRACTOR: T. BUCK CONSTRUCTION, INC.

PROJECT: **JAMAICA, ER-BRF 013-1(16)**

1-3/8" VERTICALTHREADBAR ASSEMBLY

DATE: 02/06/13 | DWG: I.TIRA | CHK: EZ | APP: EZ

THIS DRAWING, THE PERTINENT ENCLOSURES, DESCRIPTIONS, CALCULATIONS ETC. AND THEIR CONTENTS ARE THE PROPERTY OF **DYWIDAG SYSTEMS INTERNATIONAL, USA, INC.** THEY ARE NOT ALLOWED TO BE DUPLICATED WITHOUT OUR PERMISSION. THEY ARE ALSO NOT TO BE SHOWN OR EXPLAINED FOR ANY REASON TO A THIRD PARTY OTHER THAN FOR REASONS EXPRESSLY INTENDED BY **DSI's** SUBMITTAL TO THE ORIGINAL RECEIVER. THEY HAVE TO BE RETURNED UPON REQUEST.

DYWIDAG SYSTEMS INTERNATIONAL, USA INC. DOES NOT ASSUME ANY LIABILITY FOR THE DESIGN OF THIS STRUCTURE. THIS SHOP DRAWING IS INTENDED TO PROVIDE POST TENSIONING DETAILS ONLY.

WEIGHT	REV.	DATE	ISSUE DESCRIPTION	NAME	CHKD.	JOB NUMBER
	0	02/14/13	FOR APPROVAL	IT	EZ	J092604
	△1	03/22/13	FOR APPROVAL	IT	EZ	
SCALE 3/16" = 1"						DRAWING NUMBER: PT-3

DYWIDAG-SYSTEMS INTERNATIONAL, USA, INC.
POST TENSIONING / REINFORCING UNIT PHONE: 630-739-1100
320 MARMON DRIVE - BOLINGBROOK, IL FAX: 630-739-1405

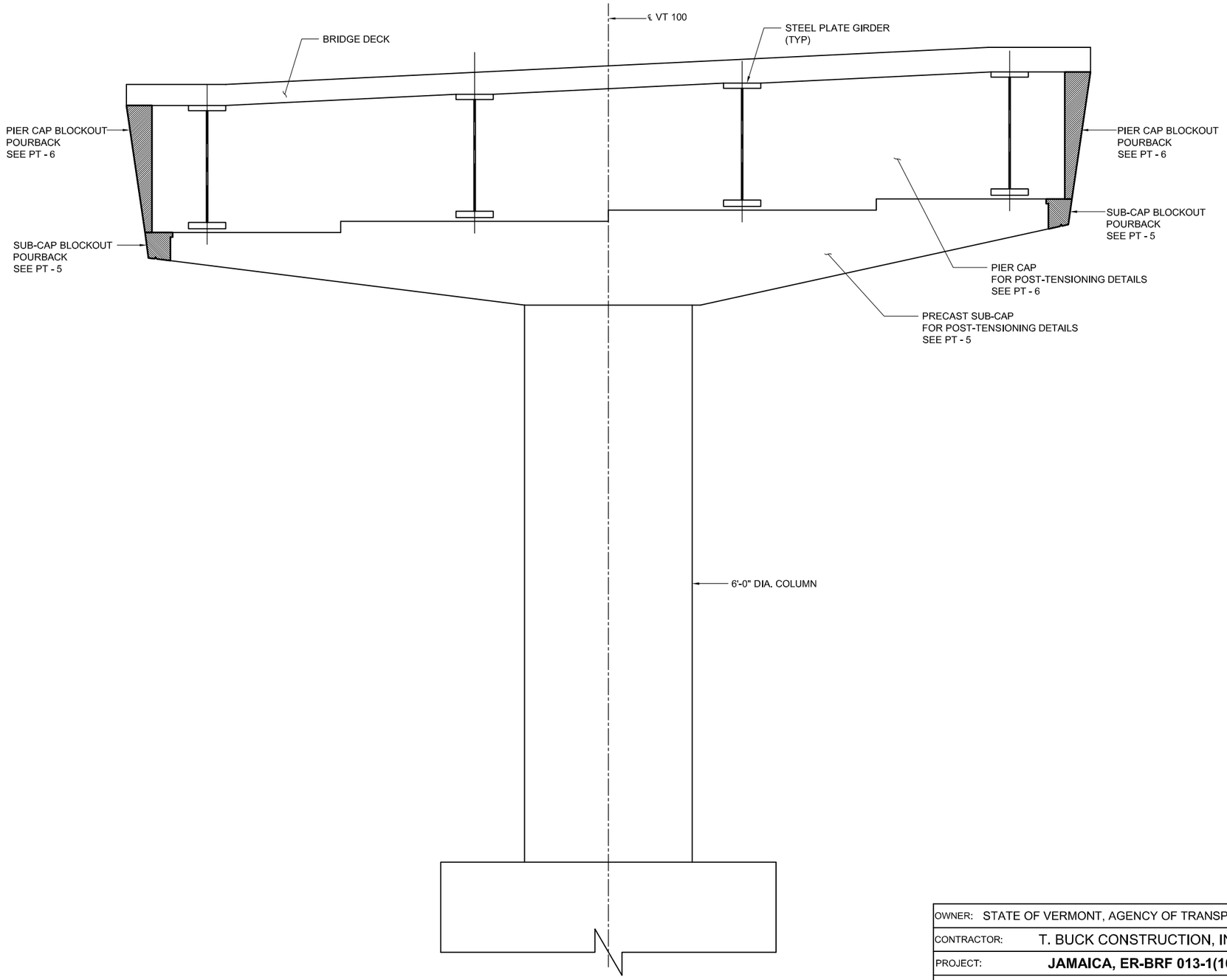

PIER SCHEMATIC

OWNER:	STATE OF VERMONT, AGENCY OF TRANSPORTATION
CONTRACTOR:	T. BUCK CONSTRUCTION, INC.
PROJECT:	**JAMAICA, ER-BRF 013-1(16)**
	PIER SCHEMATIC

DATE: 02/06/13	DWG: I.TIRA	CHK: EZ	APP: EZ

THIS DRAWING, THE PERTINENT ENCLOSURES, DESCRIPTIONS, CALCULATIONS ETC. AND THEIR CONTENTS ARE THE PROPERTY OF **DYWIDAG SYSTEMS INTERNATIONAL, USA, INC.** THEY ARE NOT ALLOWED TO BE DUPLICATED WITHOUT OUR PERMISSION. THEY ARE ALSO NOT TO BE SHOWN OR EXPLAINED FOR ANY REASON TO A THIRD PARTY OTHER THAN FOR REASONS EXPRESSLY INTENDED BY **DSI's** SUBMITTAL TO THE ORIGINAL RECEIVER. THEY HAVE TO BE RETURNED UPON REQUEST.

DYWIDAG SYSTEMS INTERNATIONAL, USA INC. DOES NOT ASSUME ANY LIABILITY FOR THE DESIGN OF THIS STRUCTURE. THIS SHOP DRAWING IS INTENDED TO PROVIDE POST TENSIONING DETAILS ONLY.

WEIGHT	REV.	DATE	ISSUE DESCRIPTION	NAME	CHKD.	JOB NUMBER
	0	02/14/13	FOR APPROVAL	IT	EZ	**J092604**
	1	03/22/13	FOR APPROVAL	IT	EZ	
SCALE 1/4" = 1'-0"						DRAWING NUMBER:
						PT-4

DYWIDAG-SYSTEMS INTERNATIONAL, USA, INC.
POST TENSIONING / REINFORCING UNIT PHONE: 630-739-1100
320 MARMON DRIVE - BOLINGBROOK, IL FAX: 630-739-1405

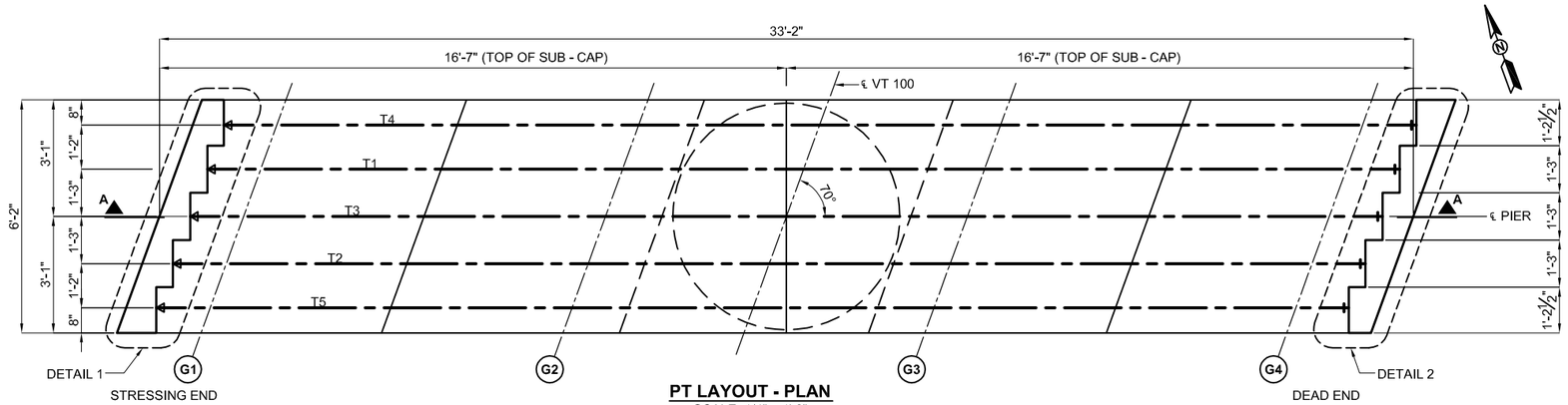

PT LAYOUT - PLAN
SCALE: 1/4" = 1'-0"

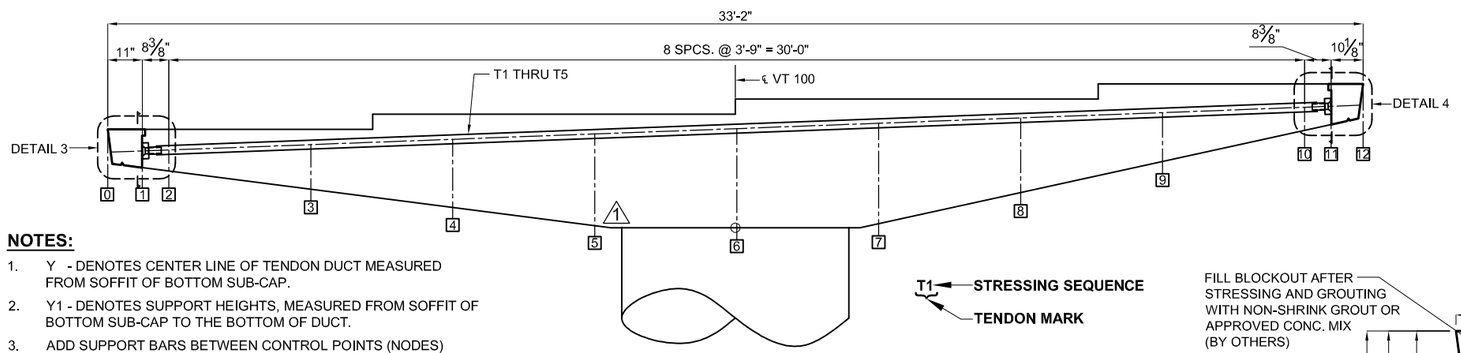

PROFILE - SECTION A-A
SCALE: 1/4" = 1'-0"

T1 — STRESSING SEQUENCE
TENDON MARK

NOTES:

1. Y - DENOTES CENTER LINE OF TENDON DUCT MEASURED FROM SOFFIT OF BOTTOM SUB-CAP.
2. Y1 - DENOTES SUPPORT HEIGHTS, MEASURED FROM SOFFIT OF BOTTOM SUB-CAP TO THE BOTTOM OF DUCT.
3. ADD SUPPORT BARS BETWEEN CONTROL POINTS (NODES) EVERY 2 FT. MAXIMUM.
4. FOR DRIP NOTCH SEE SHEET 41 OF 85.

	TENDON	Node	0	1	2	3	4	5	6	7	8	9	10	11	12
			A.P.											A.P.	
	MARK	Dist. from Point 0 (ft)	0.00	0.92	1.62	5.37	9.12	12.87	16.62	20.37	24.12	27.87	31.62	32.32	33.17
1	T1 thru T5	Y (in)		5.30	6.70	14.16	21.62	29.08	31.42	31.81	23.65	15.49	7.33	5.80	
		Y1 (in)		4.06	5.46	12.92	20.38	27.84	30.18	30.57	22.41	14.25	6.09		

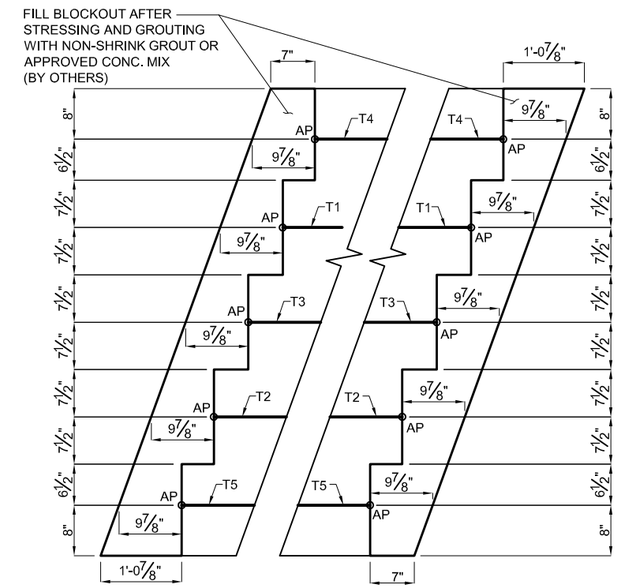

DETAIL 1 - BLOCKOUT
SCALE: 1/2" = 1'-0"

DETAIL 2 - BLOCKOUT
SCALE: 1/2" = 1'-0"

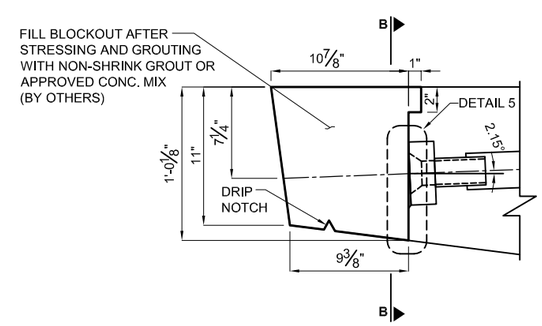

DETAIL 3 - BLOCKOUT
SCALE: 1" = 1'-0"

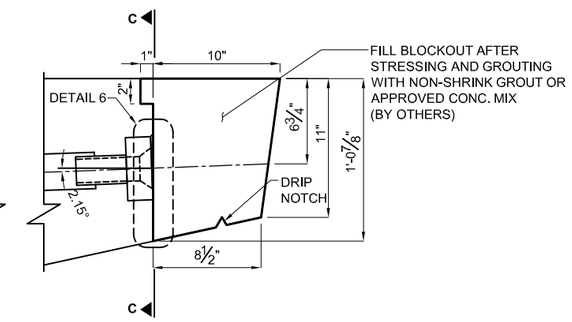

DETAIL 4 - BLOCKOUT
SCALE: 1" = 1'-0"

STRESSING SCHEDULE

PIER SUB CAP TENDONS	STRESSING LENGTH	AREA OF BAR	JACKING FORCE	AVERAGE LOCK-OFF FORCE	TARGET ELONGATION AFTER LOCK-OFF
	L	A	JF	EF	TEAL
	(FT)	(IN2)	(KIPS)	(KIPS)	(IN)
ALL	31.42	1.58	165.9	157.6	1.27

NOTE:
1. STRESSING OPERATIONS SHALL NOT BEGIN UNTIL CONCRETE HAS REACHED A COMPRESSIVE STRENGTH OF 4,000 PSI.
2. AS PER NOTE 52 IN SHEET 3 OF 85, TENSION SHALL BE VERIFIED BY PERFORMING A LIFT-OFF TEST PRIOR TO GROUTING.

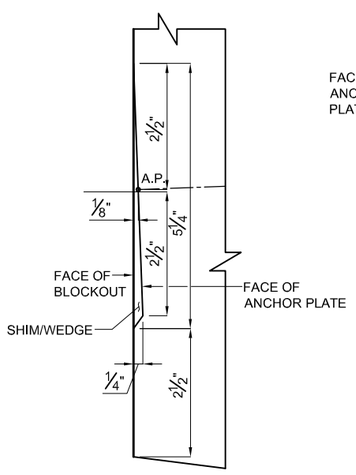

DETAIL 5 - BLOCKOUT
N.T.S.

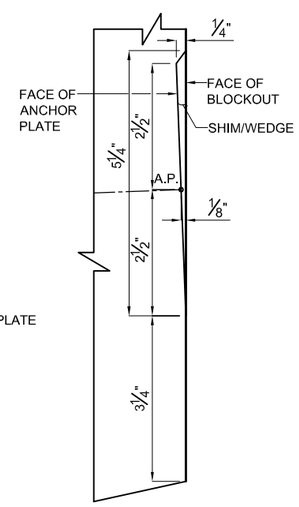

DETAIL 6 - BLOCKOUT
N.T.S.

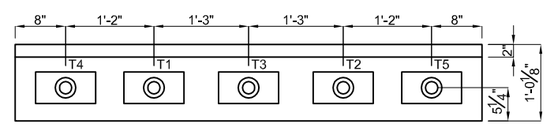

SECTION B-B
SCALE: 1/2" = 1'-0"

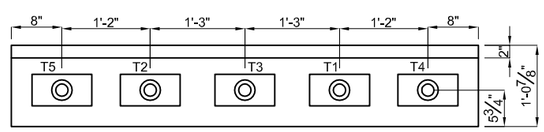

SECTION C-C
SCALE: 1/2" = 1'-0"

NOTES:
1. ONLY PLATE SHOWN.
2. FOR STRESSING STAGING SEE NOTES 4-6 IN SHEET 38 OF 85.

SEE DRAWING PT-1 FOR ASSEMBLY DETAILS.

OWNER: STATE OF VERMONT, AGENCY OF TRANSPORTATION
CONTRACTOR: T. BUCK CONSTRUCTION, INC.
PROJECT: **JAMAICA, ER-BRF 013-1(16)**

PRECAST SUB-CAP
PT THREADBAR LAYOUTS AND DETAILS

DATE: 02/06/13 | DWG: I.TIRA | CHK: EZ | APP: EZ

THIS DRAWING, THE PERTINENT ENCLOSURES, DESCRIPTIONS, CALCULATIONS ETC. AND THEIR CONTENTS ARE THE PROPERTY OF **DYWIDAG SYSTEMS INTERNATIONAL, USA, INC.** THEY ARE NOT ALLOWED TO BE DUPLICATED WITHOUT OUR PERMISSION. THEY ARE ALSO NOT TO BE SHOWN OR EXPLAINED FOR ANY REASON TO A THIRD PARTY OTHER THAN FOR REASONS EXPRESSLY INTENDED BY **DSI's** SUBMITTAL TO THE ORIGINAL RECEIVER. THEY HAVE TO BE RETURNED UPON REQUEST.

DYWIDAG SYSTEMS INTERNATIONAL, USA INC. DOES NOT ASSUME ANY LIABILITY FOR THE DESIGN OF THIS STRUCTURE. THIS SHOP DRAWING IS INTENDED TO PROVIDE POST TENSIONING DETAILS ONLY.

WEIGHT	REV.	DATE	ISSUE DESCRIPTION	NAME	CHKD.	JOB NUMBER
	0	02/14/13	FOR APPROVAL	IT	EZ	J092604
	1	03/22/13	FOR APPROVAL	IT	EZ	
SCALE AS SHOWN						DRAWING NUMBER: PT-5

DYWIDAG-SYSTEMS INTERNATIONAL, USA, INC.
POST TENSIONING / REINFORCING UNIT PHONE: 630-739-1100
320 MARMON DRIVE - BOLINGBROOK, IL FAX: 630-739-1405

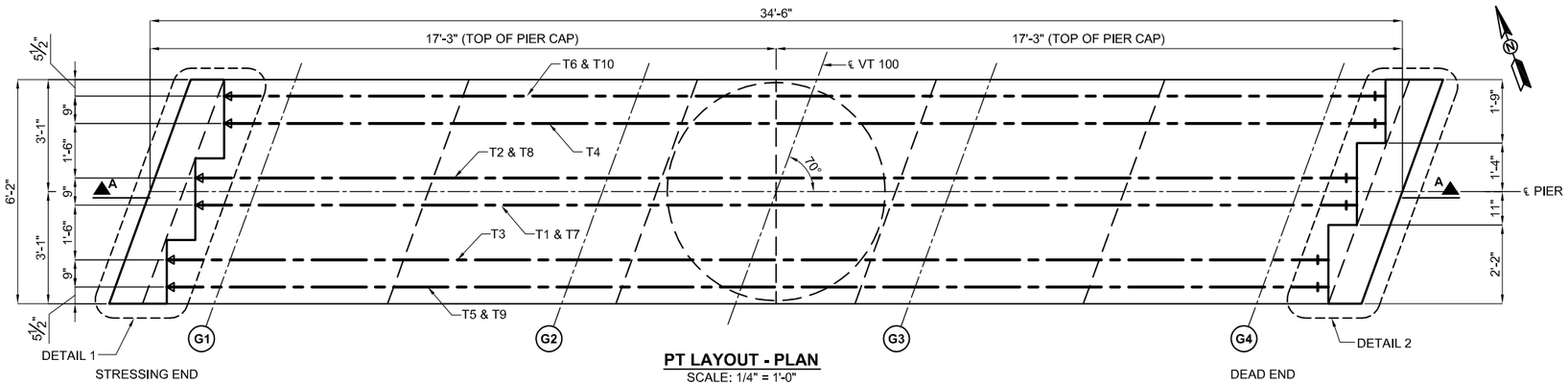

PT LAYOUT - PLAN
SCALE: 1/4" = 1'-0"

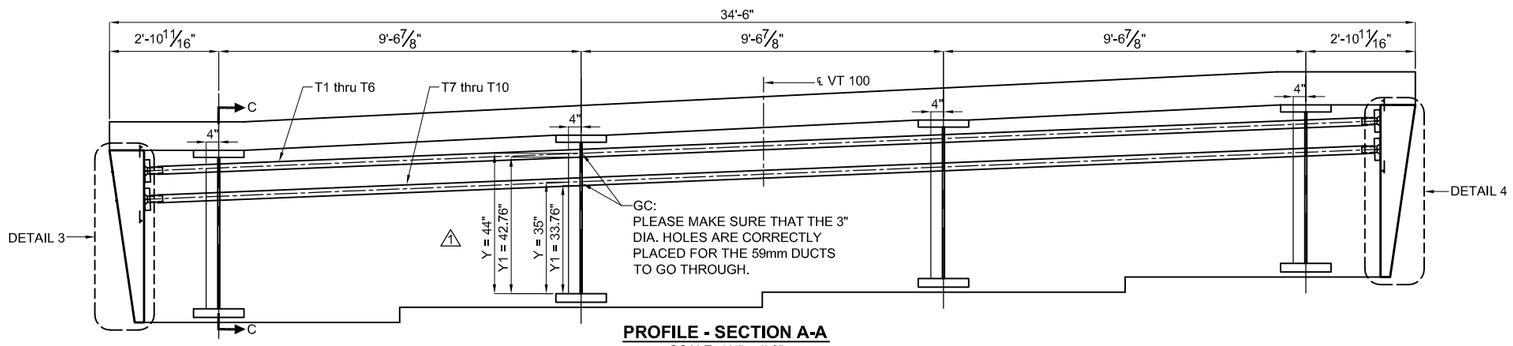

PROFILE - SECTION A-A
SCALE: 1/4" = 1'-0"

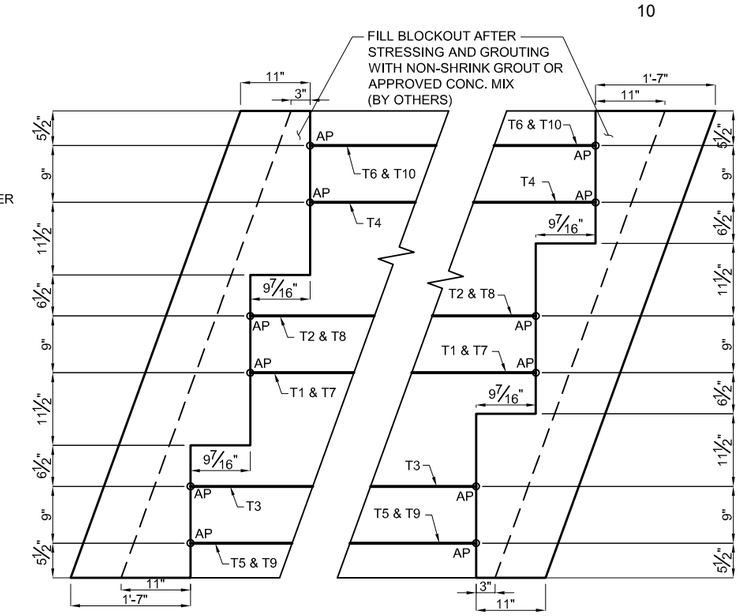

DETAIL 1 - BLOCKOUT
SCALE: 1/2" = 1'-0"

DETAIL 2 - BLOCKOUT
SCALE: 1/2" = 1'-0"

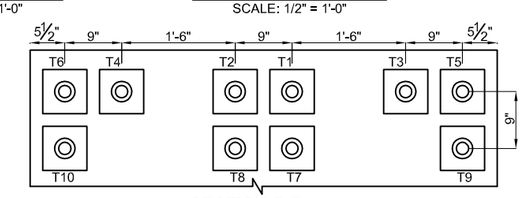

SECTION B-B

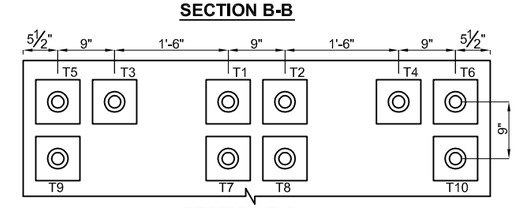

SECTION C-C

NOTES:
1. ONLY PLATE SHOWN.
2. FOR STRESSING STAGING SEE NOTES IN SHEET 38 OF 85.

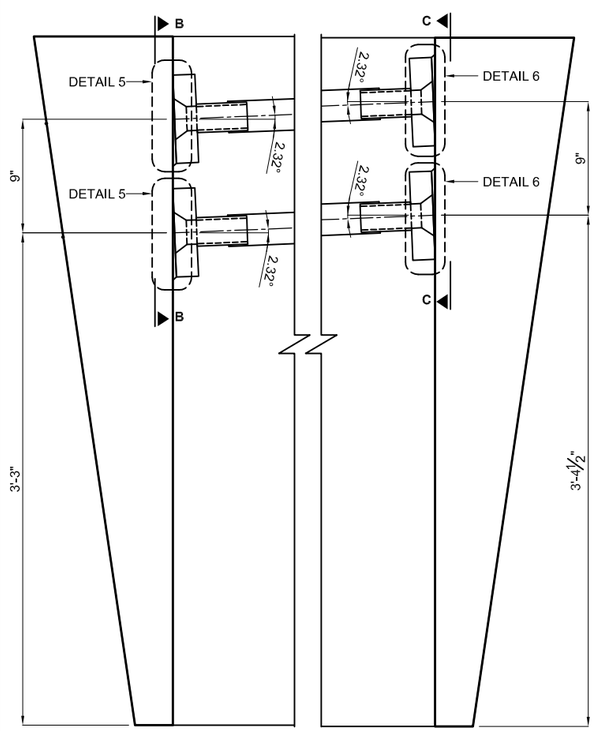

DETAIL 3 - BLOCKOUT
SCALE: 1" = 1'-0"

DETAIL 4 - BLOCKOUT
SCALE: 1" = 1'-0"

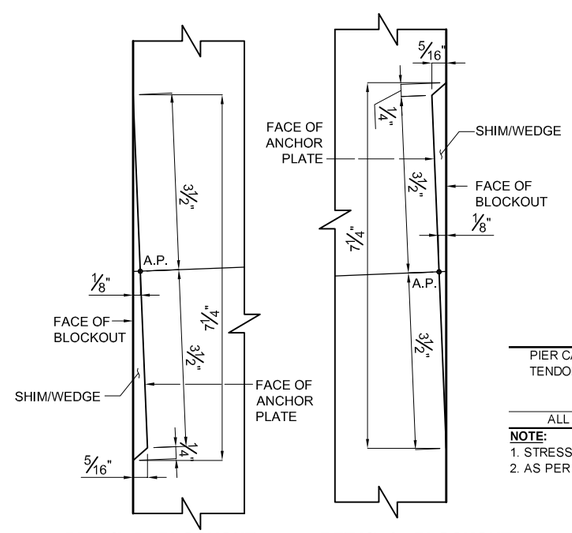

DETAIL 5 - BLOCKOUT
N.T.S.

DETAIL 6 - BLOCKOUT
N.T.S.

T1 ← STRESSING SEQUENCE
TENDON MARK

NOTES:

1. Y - DENOTES CENTER LINE OF TENDON DUCT MEASURED FROM TOP OF BOTTOM FLANGE OF STEEL PLATE GIRDER AT CENTER LINE OF PIER.
2. Y1 - DENOTES SUPPORT HEIGHTS MEASURED FROM TOP OF BOTTOM FLANGE OF STEEL PLATE GIRDER TO THE BOTTOM OF DUCT AT CENTER LINE OF PIER.
3. Y AND Y1 ARE TYPICAL AT EACH GIRDER.
4. SUPPORT DUCT EVERY 2 FT. MAXIMUM. ADD SUPPORT BARS BETWEEN GIRDER WEB.
5. FOR LOCATION OF 3" DIA. HOLES ON WEBS SEE STRUCTURAL DRAWINGS.

STRESSING SCHEDULE

PIER CAP TENDONS	STRESSING LENGTH	AREA OF BAR	JACKING FORCE	AVERAGE LOCK-OFF FORCE	TARGET ELONGATION AFTER LOCK-OFF
	L	A	JF	EF	TEAL
	(FT)	(IN2)	(KIPS)	(KIPS)	(IN)
ALL	32.67	1.58	165.9	157.9	1.32

NOTE:
1. STRESSING OPERATIONS SHALL NOT BEGIN UNTIL CONCRETE HAS REACHED A COMPRESSIVE STRENGTH OF 4,000 PSI.
2. AS PER NOTE 52 IN SHEET 3 OF 85, TENSION SHALL BE VERIFIED BY PERFORMING A LIFT-OFF TEST PRIOR TO GROUTING.

SEE DRAWING PT-2 FOR ASSEMBLY DETAILS.

OWNER: STATE OF VERMONT, AGENCY OF TRANSPORTATION
CONTRACTOR: T. BUCK CONSTRUCTION, INC.
PROJECT: **JAMAICA, ER-BRF 013-1(16)**

PIER CAP
PT THREADBAR LAYOUTS AND DETAILS

DATE: 02/06/13 | DWG: I.TIRA | CHK: EZ | APP: EZ

THIS DRAWING, THE PERTINENT ENCLOSURES, DESCRIPTIONS, CALCULATIONS ETC. AND THEIR CONTENTS ARE THE PROPERTY OF **DYWIDAG SYSTEMS INTERNATIONAL, USA, INC.** THEY ARE NOT ALLOWED TO BE DUPLICATED WITHOUT OUR PERMISSION. THEY ARE ALSO NOT TO BE SHOWN OR EXPLAINED FOR ANY REASON TO A THIRD PARTY OTHER THAN FOR REASONS EXPRESSLY INTENDED BY **DSI's** SUBMITTAL TO THE ORIGINAL RECEIVER. THEY HAVE TO BE RETURNED UPON REQUEST.

DYWIDAG SYSTEMS INTERNATIONAL, USA INC. DOES NOT ASSUME ANY LIABILITY FOR THE DESIGN OF THIS STRUCTURE. THIS SHOP DRAWING IS INTENDED TO PROVIDE POST TENSIONING DETAILS ONLY.

WEIGHT	REV.	DATE	ISSUE DESCRIPTION	NAME	CHKD.	JOB NUMBER
	0	02/14/13	FOR APPROVAL	IT	EZ	J092604
	1	03/22/13	FOR APPROVAL	IT	EZ	
SCALE AS SHOWN						DRAWING NUMBER: PT-6

DYWIDAG-SYSTEMS INTERNATIONAL, USA, INC.
POST TENSIONING / REINFORCING UNIT PHONE: 630-739-1100
320 MARMON DRIVE - BOLINGBROOK, IL FAX: 630-739-1405

```
-----------------------------------------------------------------------------
|                            ADAPT CORPORATION                              |
|         1733 Woodside Road, Suite 220, Redwood City, CA 94061 USA         |
|                  Tel: (650) 306 2400, Fax: (650) 364 4678                 |
|        E-mail: support@adaptsoft.com,  Web site: www.adaptsoft.com        |
-----------------------------------------------------------------------------
|                        ADAPT-FELT  Standard  4.07                         |
|           ADAPT POST-TENSIONING STRESS LOSS & ELONGATION PROGRAM           |
|                        LICENSED TO: DSI, USA Inc.                         |
-----------------------------------------------------------------------------
 This program calculates the long-term and immediate stress losses in a post-
 tensioned tendon. It outputs the elongations at the stressing ends and the
 final stress profile along the tendon.
-----------------------------------------------------------------------------
DATE: Feb 13, 2013                                          TIME: 10:27:59


P R O J E C T   T I T L E :
Jamaica VT Pier Sub Cap


S P E C I F I C   T I T L E :
1-3/8"  Threadbar



F R I C T I O N   &   E L O N G A T I O N   C A L C U L A T I O N S :

INPUT PARAMETERS :
Coefficient of angular friction (meu)................      .25000 /radian
Coefficient of wobble friction (K)...................      .00020 rad/ft
Ultimate strength of strand .........  ..............    150.00    ksi
Ratio of jacking stress to strand's ultimate strength      .70
Anchor set ..........................................      .06    inch
Cross-sectional area of strand ......................     1.580   inch^2
Total Number of Strands per Tendon...................     1
Modulus of elasticity of strand .....................  29700.00    ksi
STRESSING ...........................................     AT LEFT END


LEGEND :
P ....... = Tendon profile type defined as: 1=reversed parabola;
            2=partial/regular parabola; 3=harped; 4=general
X1/L etc  = horizontal distances to control points in geometry of the
            tendon divided by span length
Stresses tabulated are after anchor set but before long-term losses.


TENDON ID,  GEOMETRY AND STRESS PROFILE  (Sub Cap PT)

     LENGTH    < TENDON HEIGHT in.>  Horizontal ratios   <-  STRESS (ksi)  -->
SPAN  ft    P  start  center  right   X1/L X2/L X3/L     start   center  right
-1----2-----3----4------5------6-------7----8----9--------10------11------12-

 1   31.42  1     .00    .00    .00    .05  .50  .05      99.42   99.75 100.08
---------------------------------------
     31.42 ft (total length of tendon)
```

SUMMARY :

Average initial stress (after release).....	99.75	ksi
Long term stress losses	.00	ksi
Final average stress	99.75	ksi
Final average force in tendon	157.60	k
Anchor set influence from left pull (100.08ksi; .667) ..	31.42	ft
Elongation at left pull before anchor set	1.33	inch
Elongation at left pull after anchor set	1.27	inch
Total elongation after anchor set	1.27	inch
Ratio of total elongation to tendon length after anchor set	.040302	inch/ft
Jacking force	165.90	k

CRITICAL STRESS RATIOS :
At stressing .700; At anchorage .667; Max along tendon .667

DETAIL OF STRESSES AT 1/20TH POINTS ALONG EACH SPAN

Units are in ksi

X/L	Span 1
.00	99.42
.05	99.45
.10	99.48
.15	99.52
.20	99.55
.25	99.58
.30	99.62
.35	99.65
.40	99.68
.45	99.71
.50	99.75
.55	99.78
.60	99.81
.65	99.85
.70	99.88
.75	99.91
.80	99.94
.85	99.98
.90	100.01
.95	100.04
1.00	100.08

```
-----------------------------------------------------------------------------
|                            ADAPT CORPORATION                              |
|         1733 Woodside Road, Suite 220, Redwood City, CA 94061 USA         |
|                  Tel: (650) 306 2400, Fax: (650) 364 4678                 |
|        E-mail: support@adaptsoft.com,  Web site: www.adaptsoft.com        |
-----------------------------------------------------------------------------
|                        ADAPT-FELT  Standard  4.07                         |
|           ADAPT POST-TENSIONING STRESS LOSS & ELONGATION PROGRAM           |
|                        LICENSED TO: DSI, USA Inc.                         |
-----------------------------------------------------------------------------
 This program calculates the long-term and immediate stress losses in a post-
 tensioned tendon. It outputs the elongations at the stressing ends and the
 final stress profile along the tendon.
-----------------------------------------------------------------------------
DATE: Feb 13, 2013                                          TIME: 10:35:29


P R O J E C T   T I T L E :
Jamaica VT Pier Cap


S P E C I F I C   T I T L E :
1-3/8"  Threadbar



F R I C T I O N   &   E L O N G A T I O N   C A L C U L A T I O N S :

INPUT PARAMETERS :
Coefficient of angular friction (meu)................       .25000 /radian
Coefficient of wobble friction (K)...................       .00020 rad/ft
Ultimate strength of strand .........  ..............    150.00    ksi
Ratio of jacking stress to strand's ultimate strength       .70
Anchor set ..........................................       .06    inch
Cross-sectional area of strand ......................      1.580   inch^2
Total Number of Strands per Tendon...................      1
Modulus of elasticity of strand .....................  29700.00    ksi
STRESSING ...........................................      AT LEFT END


LEGEND :
P ....... = Tendon profile type defined as: 1=reversed parabola;
            2=partial/regular parabola; 3=harped; 4=general
X1/L etc  = horizontal distances to control points in geometry of the
            tendon divided by span length
Stresses tabulated are after anchor set but before long-term losses.


TENDON ID,  GEOMETRY AND STRESS PROFILE  (Cap PT)

     LENGTH    < TENDON HEIGHT in.>  Horizontal ratios   <-  STRESS (ksi)  -->
SPAN  ft    P  start  center  right   X1/L X2/L X3/L     start   center  right
-1----2-----3----4------5------6-------7----8----9--------10------11------12-

 1   32.67  1     .00    .00    .00    .05  .50  .05      99.58   99.92 100.26
---------------------------------------
     32.67 ft (total length of tendon)
```

DYWIDAG-SYSTEMS INTERNATIONAL USA, INC.

SUMMARY :

Average initial stress (after release).....	99.92	ksi
Long term stress losses	.00	ksi
Final average stress	99.92	ksi
Final average force in tendon	157.88	k
Anchor set influence from left pull (100.26ksi; .668) ..	32.67	ft
Elongation at left pull before anchor set	1.38	inch
Elongation at left pull after anchor set	1.32	inch
Total elongation after anchor set	1.32	inch
Ratio of total elongation to tendon length after anchor set	.040373	inch/ft
Jacking force	165.90	k

CRITICAL STRESS RATIOS :
At stressing .700; At anchorage .668; Max along tendon .668

DETAIL OF STRESSES AT 1/20TH POINTS ALONG EACH SPAN

Units are in ksi

X/L	Span 1
.00	99.58
.05	99.61
.10	99.65
.15	99.68
.20	99.72
.25	99.75
.30	99.79
.35	99.82
.40	99.85
.45	99.89
.50	99.92
.55	99.96
.60	99.99
.65	100.03
.70	100.06
.75	100.09
.80	100.13
.85	100.16
.90	100.20
.95	100.23
1.00	100.26

DYWIDAG SYSTEMS INTERNATIONAL

Date: September 04, 2008

DYWIDAG-Systems International USA, Inc.

DSI Engineering
320 Marmon Drive
Bolingbrook, IL 60440-3078
Tel.: 630/972-4025
Fax: 630/739-6155
E-Mail: said.nour@disamerica.com
www.dywidag-systems.com

Memo

Re: Revised Submittal for DSI 1-3/8" PT Bar System 100

Dear Mr. Boyd,

I am submitting herein a revised submittal for DSI 1-3/8" PT Bar System 100.
This submittal is a revision of the previous submittal dated January 08, 2008.

This revised submittal is complete and contains the following:

1. DSI 1-3/8" PT Bar System Certification Letter with original signature
2. Assembly Drawing for Block-out and/or Surface Mount 1-3/8" Bar System: PT36E024
3. Assembly Drawing for 1-3/8" PT Bar System Coupling Details: PT36E031
4. Bar Grout Cap with O-Ring Details: B36E50700
5. Square End Anchorage with Inlet/Outlet Details for 1-3/8" PT Bar System: B36E22510
6. Rectangular End Anchorage with inlet/Outlet Details for 1-3/8" Bar System: B36E22610
7. Intermediate Square Anchorage Details for 1-3/8" PT Bar System: B36E24510
8. Intermediate Rectangular Anchorage Details for 1-3/8" PT Bar System: B36E24610
9. Groutable Anchor Nut Details for 1-3/8" PT Bar System: B36E24200
10. 59mm GTI PP Duct Drawing: U00220200
11. 59mm GTI PP Duct Coupler Drawing: U00220205
12. 1-3/8" PT Bar Coupler: B36E30810
13. 1-3/8" PT Bar: B36ECUT
14. Plate Coupler Housing Details for 1", 1-1/4" and 1-3/8" PT Bar Systems: B36E50210
15. Plate Coupler Connector Details for 1", 1-1/4" and 1-3/8" PT Bar Systems: B36E52210
16. Corr. PE Coupler Housing Details for 1", 1-1/4" and 1-3/8" PT Bar Systems: U06008010
17. Details for ½" NPT Ball Valve: 00 00 634
18. Details for ½" NPT Pipe Nipple: 00 00 676
19. Details for ¾" NPT Ball Valve: 00 00 834
20. Details for ¾" NPT Pipe Nipple: 00 00 876
21. DSI 21mm Grout Tube Details: 00 00 801
22. Details for 21mm Female-3/4" NPT Male Connector: 00 00 845
23. DSI 21mm Grout Tube Cap Details: 00 00 841
24. Details for BT 0750 (3/4") NPT Nylon Plug: 00 00 847
25. Details for BT 0500 (1/2") NPT Nylon Plug: 00 00 647

26. Details of Stainless Steel 316L Bolts and Washers for Grout Caps: 00 00 770
27. Heat Shrink Sleeve Sizes for Internal Applications Details: PLA-0-0-0
28. 1-3/8" PT Bar System Square & Rectangular Bearing Plate Design Calculations
29. Grout Cap Pressure Test Report for 1", 1-1/4" and 1-3/8" Bar Systems
30. 59mm Duct Test Report per FIB Bulletin No. 7
31. Accreditation Letter for Duct Testing Agency
32. Cell Classification & OIT Test Reports for GTI 59mm PP Duct and Red Coupler
33. Accreditation Letter for Cell Class & OIT Testing Agency
34. OIT & Stress Crack Resistance Test Reports for DSI 21mm Grout Tube
35. OIT & Stress Crack Resistance Test Reports for Bar Coupler Housing
36. OIT & NCLS Test Reports for Plate Coupler Housing and 21mm grout tube cap
37. Accreditation Letter for TRI, OIT/NCLS Testing Agency
38. Nylon Cell Classification Test Report for Grout Cap and Adaptors
39. Full scale pressure test report for Uncoupled 1" PT Bar System
40. Full Scale Pressure Test Report for Coupled 1" PT Bar System
41. Accreditation Letter for Full Scale Pressure Test Witness Agency
42. 1-3/8" PT Bar Coupler Test Reports
43. Nylon Plugs Data Sheets
44. PVC Schedule 40 Economy Ball Valves Data Sheet
45. CANUSA-CSP Heat Shrink Sleeves Material Data Sheets

Note: Some components of this system are standard parts common to our Post-Tensioning systems were therefore approved by FDOT in previous submittals. The part drawings of such components have an "Approved by FDOT" stamp on it.

Said Nour
Business Unit Engineer

c/c: Erich Aigner
c/c: Gary Pueschel
c/c: File

Enclosure (Sent by FedEx 9-4-08)

DYWIDAG SYSTEMS INTERNATIONAL

DYWIDAG-Systems
International USA, Inc.

DSI Engineering
320 Marmon Drive
Bolingbrook, IL 60440-3078
Tel.: 630/972-4027
Fax: 630/739-6155
E-Mail:
erich.aigner@disamerica.com
www.dywidag-systems.com

System Certification:

Dywidag System International USA, Inc., (DSI) herewith certifies that the DSI Internal Application System 100 for the

1-3/8" PT BAR WITH EXIT PIPE SYSTEM 100

as shown in the following documentation conforms to the intent of Section 462 of the FDOT Post-Tensioning Specifications.

Bolingbrook, IL January 08, 2008 Mark Milici

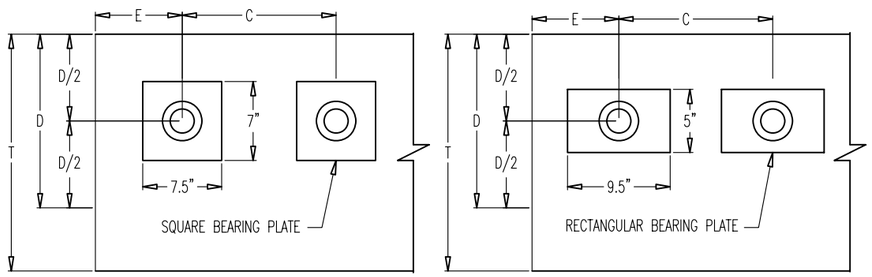

LEGEND:
E=END DISTANCE
C=CENTER TO CENTER DISTANCE
D/2=EDGE DISTANCE

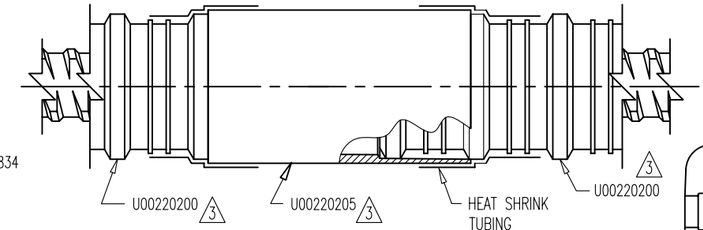

GTI COUPLER

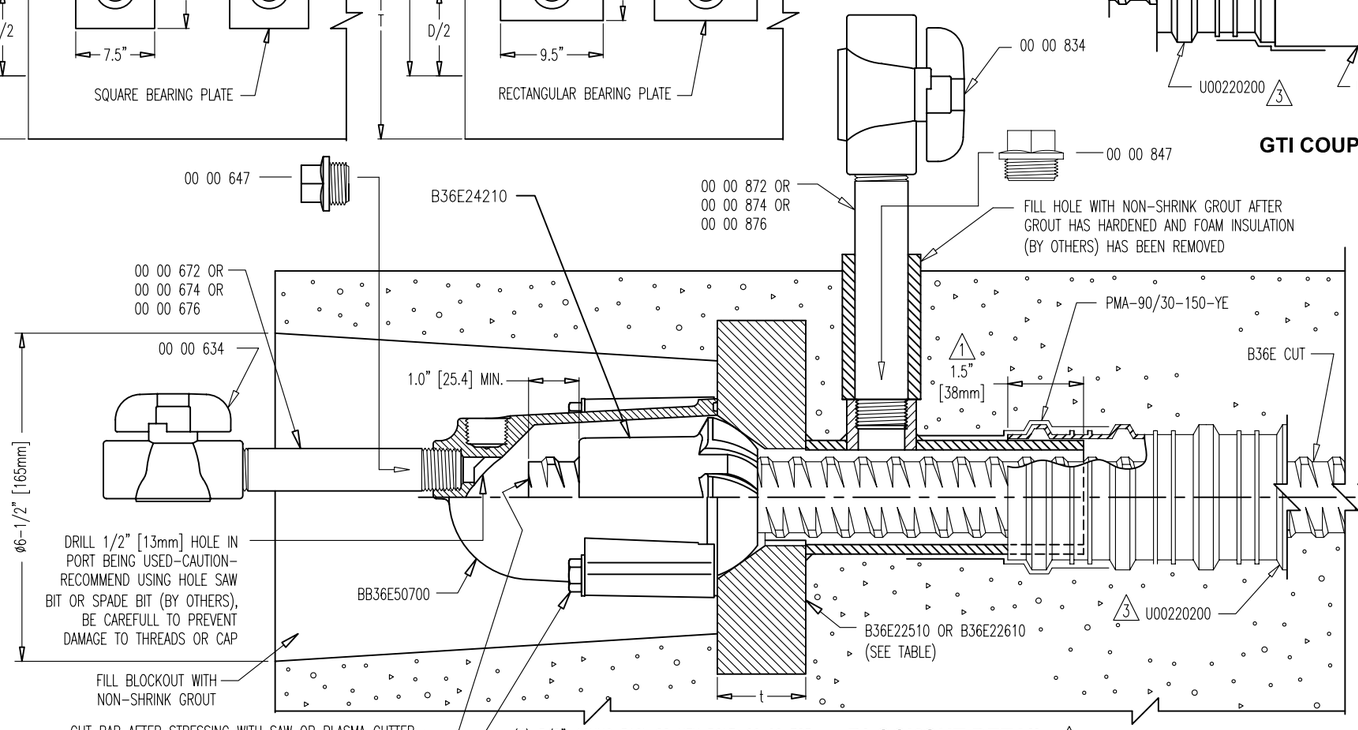

BLOCKOUT DETAIL 3

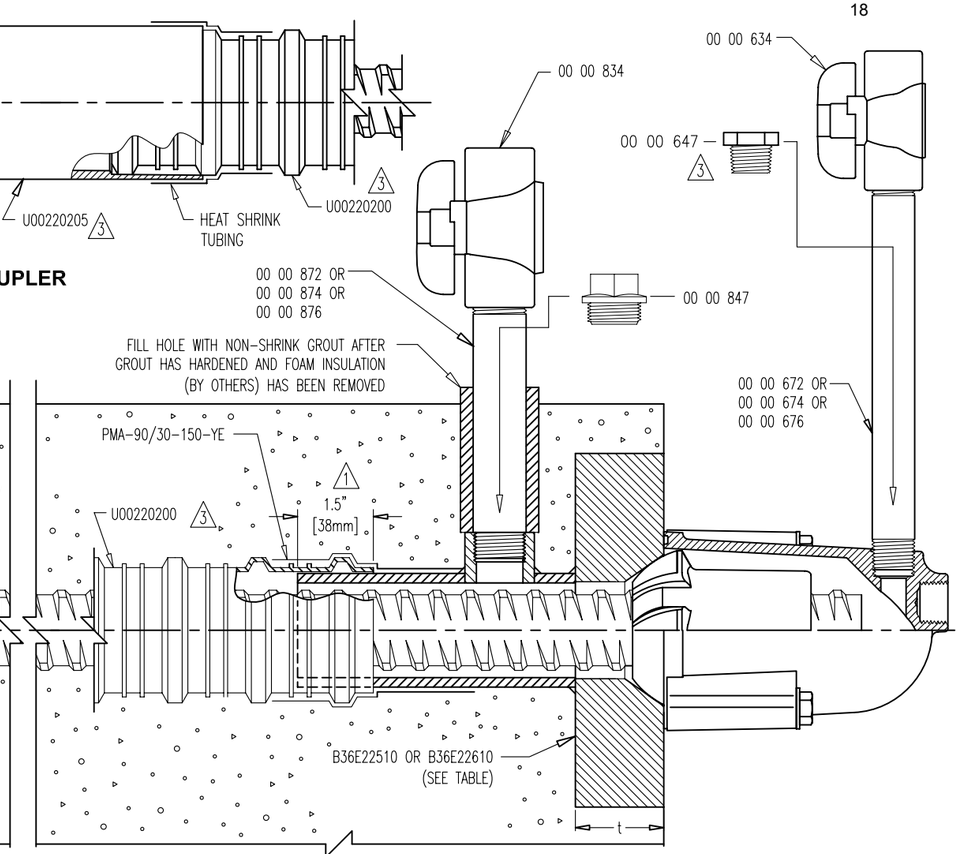

SURFACE MOUNT DETAIL 3

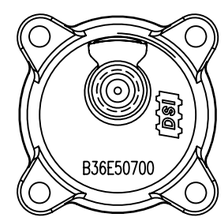

CAP END VIEW

NOTES:
1. REQUIRED REINFORCING BARS ARE NOT SHOWN ON THIS DRAWING.
2. MAXIMUM ANGULAR MISALIGNMENT WHEN USING ANCHOR NUT: ±2°.
3. CENTER TO CENTER, END AND EDGE DISTANCE DEPENDS ON THE LOCATION OF THE BAR AND CONCRETE STRENGTH, (SEE TABLE).
4. 2 C/C DISTANCE = 2 X END DISTANCE – 2 X CONCRETE COVER (2" ASSUMED). TIGHTER C/C DISTANCE SHOULD BE EVALUATED.
5. 1 GTI DUCT IS DELIVERED IN STRAIGHT SECTIONS AND IS NOT INTENDED TO BE COILED.
6. BURSTING REINFORCEMENT IS NOT SHOWN AND WILL BE INCLUDED WITH THE SHOP DRAWINGS.

2

Plate Type	fci, ksi	Depth, D (in)	Minimim distances, in	
			End dist, E	c/c dist, C
Square	5.5	11.0	5.89	7.78
	5.0	12.0	6.41	8.83
	4.5	13.0	6.98	9.95
	4.0	15.0	8.03	12.05
Rectangular	5.0	9.0	8.55	13.10
	4.5	10.0	9.50	15.00
	4.0	12.0	11.40	18.80

Plate Type	Part No	Width, in	Length, in	Thickness, in
Square	B36E22510	7	7.5	1.75
Rectangular	B36E22610	5	9.5	2

APPROVED BY FDOT 9-22-08

PART NUMBER	DESCRIPTION	MATERIAL SPECIFICATION
B36E22510 OR B36E22610	7"x7.5"x1.75" SQ. OR 5"x9.5"x2" RECT. BEARING PL. W/EXIT 2 1/4" x 3/16" WALL 5 1/2" LONG MECHANICAL TUBING PIPE & BOLT HOLES, GALV.	STEEL PLATE, ASTM A36, GALVANIZED
B36E50700	BAR GROUT CAP WITH O-RING	NYLON 6, 20% GLASS FIBER FILLED CAP
3 00 00 783 00 00 774	3/8"-16UNC HEX BOLT 3-1/4" LONG NARROW WASHER	316L STAINLESS STEEL
B36E24210	1-3/8" GROUTABLE ANCHOR NUT 3	FORGING, NORMALIZED C1045
00 00 647	1/2" BT PLUG (NIAGARA PLASTICS #BT0500)	NYLON
00 00 672/4/6	1/2" NPT NIPPLE, LENGTH AS REQUIRED	SCH 40 BLACK WELDED STEEL
00 00 847	3/4" BT PLUG (NIAGARA PLASTICS #BT0750)	NYLON
00 00 872/4/6	3/4" NPT NIPPLE, LENGTH AS REQUIRED	SCH 40 BLACK WELDED STEEL
00 00 634	1/2" NPT VALVE	PVC
00 00 834	3/4" NPT VALVE	PVC
3 U00220200	59mm CORRUGATED DUCT	PPEX3 PLASTIC
3 U00220205	59mm DUCT COUPLER	HDPE
PMA-90/30-150-YE	HEAT SHRINK TUBING, 4" (102mm) LONG 1	ACCORD. TO FDOT SPEC. P.T. SEC. 462-4,2,6,3
B36E CUT	1-3/8" THREADBAR 3	ASTM A722 TYPE II STEEL

OWNER:

CONTRACTOR:

PROJECT:

1-3/8" THREADBAR PT BAR SYSTEM 100 3
FOR BLOCKOUT AND/OR SURFACE MOUNT

DATE: 08-13-07 | DWG: A.T./G.M. | CHK: S. N. | APP: E. A.

THIS DRAWING, THE PERTINENT ENCLOSURES, DESCRIPTIONS, CALCULATIONS ETC. AND THEIR CONTENTS ARE THE PROPERTY OF **DYWIDAG SYSTEMS INTERNATIONAL, USA, INC.** THEY ARE NOT ALLOWED TO BE DUPLICATED WITHOUT OUR PERMISSION. THEY ARE ALSO NOT TO BE SHOWN OR EXPLAINED FOR ANY REASON TO A THIRD PARTY OTHER THAN FOR REASONS EXPRESSLY INTENDED BY **DSI's** SUBMITTAL TO THE ORIGINAL RECEIVER. THEY HAVE TO BE RETURNED UPON REQUEST.

DYWIDAG SYSTEMS INTERNATIONAL, USA INC. DOES NOT ASSUME ANY LIABILITY FOR THE DESIGN OF THIS STRUCTURE. THIS SHOP DRAWING IS INTENDED TO PROVIDE POST TENSIONING DETAILS ONLY.

REV.	DATE	ISSUE DESCRIPTION	NAME	CHKD.
1	11-07-07	FOR APPROVAL	G.M.	S.N.
2	12-11-07	FOR APPROVAL	G.M.	S.N.
3	08-15-08	FOR APPROVAL	G.M.	S.N.

SCALE 1:3

JOB NUMBER

DRAWING NUMBER: PT 36E 024

DYWIDAG-SYSTEMS INTERNATIONAL, USA, INC.
POST TENSIONING / REINFORCING UNIT PHONE: 630-739-1100
320 MARMON DRIVE - BOLINGBROOK, IL FAX: 630-739-6155

CAUTION WHEN USING HIGH STRENGTH DYWIDAG THREADBAR® (GRADE 150,160 & 178)

- **DO NOT** WELD TO BAR.
- **DO NOT** USE BAR AS GROUND CONNECTION FOR WELDING.
- **DO NOT** ALLOW HOT SLAG OR SPARKS TO TOUCH BAR.
- **DO NOT** DAMAGE BAR SURFACE.
- **DO NOT** USE BARS WITH KINKS OR SHARP BENDS.

FAILURE TO HEED THIS WARNING COULD CAUSE BAR TO BREAK RESULTING IN INJURY OR DAMAGE

⚠ WARNING: READ AND COMPLY WITH ALL APPLICABLE SAFETY AND OPERATING INSTRUCTIONS AND WARNINGS FOR THREADBAR STRESSING BEFORE STARTING ANY WORK OR OPERATION.

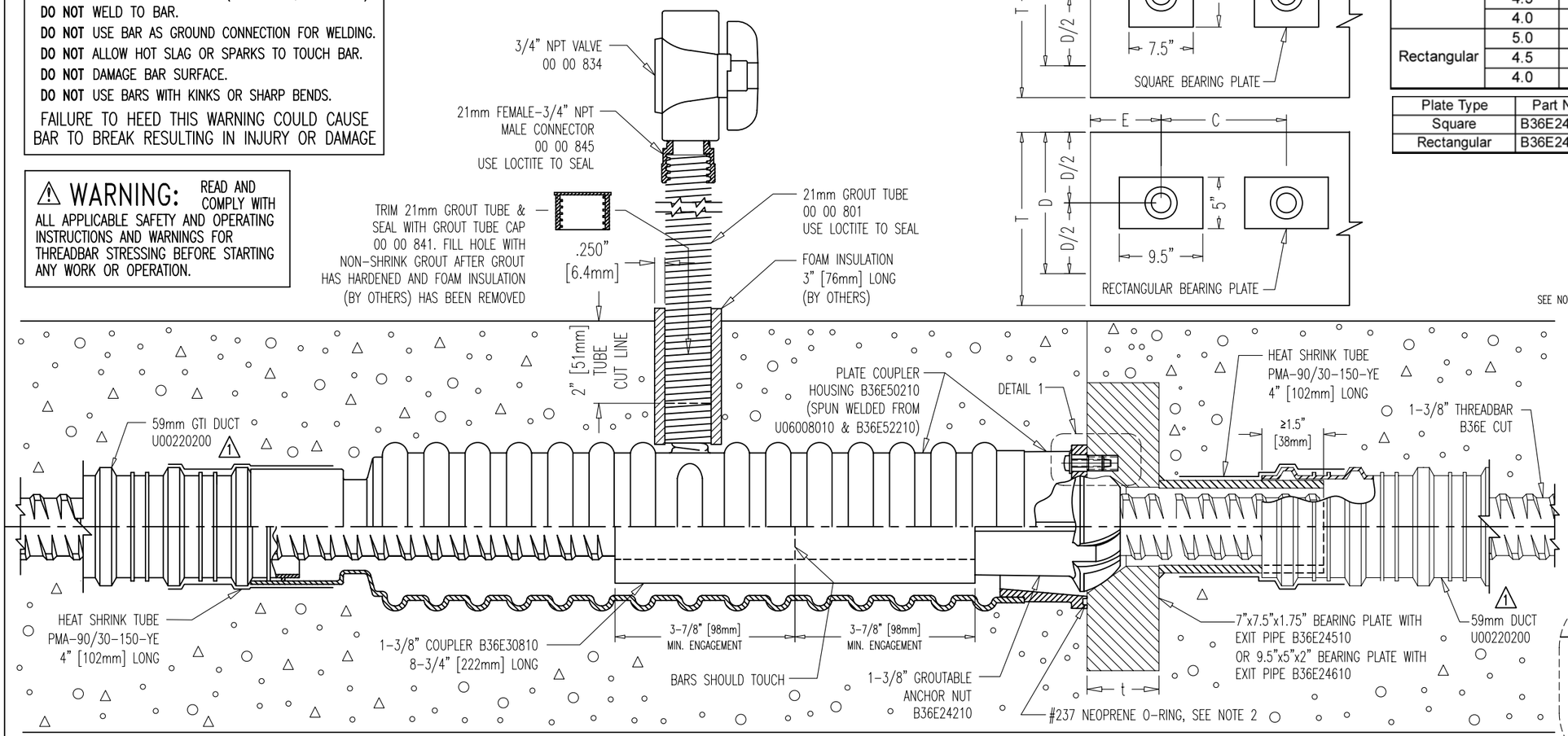

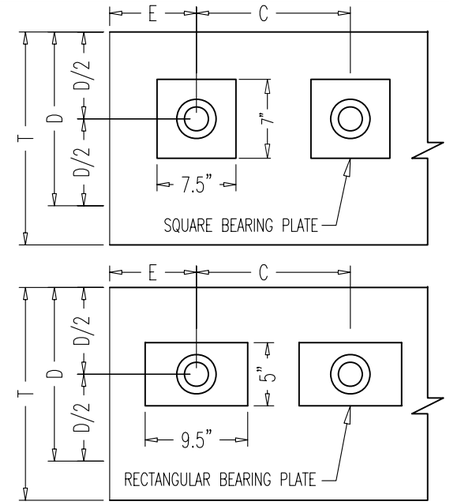

Plate Type	fci, ksi	Depth, D (in)	Minimim distances, in	
			End dist, E	c/c dist, C
Square	5.5	11.0	5.89	7.78
	5.0	12.0	6.41	8.83
	4.5	13.0	6.98	9.95
	4.0	15.0	8.03	12.05
Rectangular	5.0	9.0	8.55	13.10
	4.5	10.0	9.50	15.00
	4.0	12.0	11.40	18.80

Plate Type	Part No	Width, in	Length, in	Thickness, in
Square	B36E24510	7	7.5	1.75
Rectangular	B36E24610	5	9.5	2

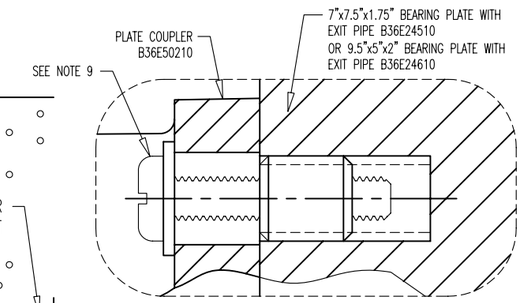

OPTION 1: PRE-CAST SEGMENTS

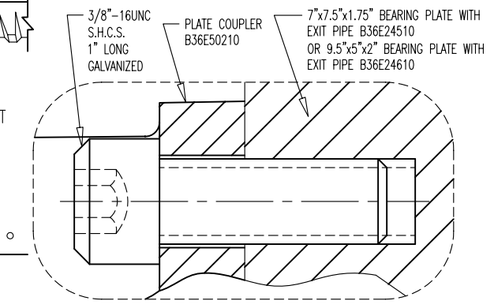

OPTION 2: CAST-IN-PLACE

DETAIL 1

PART NUMBER	DESCRIPTION	MATERIAL SPECIFICATION
B36E CUT	1-3/8" ø THREADBAR	ASTM A722 TYPE II STEEL
B36E24510 OR B36E24610	7"x7.5"x1.75" BEARING PLATE W/EXIT PIPE 5"x9.5"x2" BEARING PLATE W/EXIT PIPE	STEEL PLATE, ASTM A36, HOT DIPPED GALVANIZED
B36E50210	PLATE COUPLER HOUSING W/O-RING	POLYETHYLENE (U06008010 & B36E52210) W/NEOPRENE O-RING
B36E30810	1-3/8" COUPLER	STEEL BAR, COLD DRAWN, AISI 1117
B36E24210	1-3/8" GROUTABLE ANCHOR NUT	STEEL FORGING, ASTM A521-76 (1987) NORMALIZED BHN=180-220
1 U00220200	59mm CORRUGATED DUCT	PPEX3 PLASTIC
PMA-90/30-150-YE	HEAT SHRINK TUBING 4" (102mm) LONG	ACCORD. TO FDOT SPEC. P.T. SEC. 462-4,2,6,3
00 00 801	21mm GROUT TUBE	POLYETHYLENE (HARD, BLACK)
00 00 845	21mm FEMALE-3/4" NPT MALE CONNECTOR	20% GLASS FILLED NYLON
00 00 834	3/4" NPT VALVE	PVC
00 00 841	21mm GROUT TUBE CAP	H.D.P.E.
BY OTHERS	FOAM INSULATION	FOAM RUBBER
ANS	THREADED INSERT (2 REQ'D)	BLACK-FINISH STEEL, McMASTER-CARR #90248A068
ANS	10/32 PAN HEAD SLOTTED 1" (2 REQ'D)	NYLON, McMASTER-CARR #93135A833
ANS	3/8"-16UNC S.H.C.S. 1" LONG (4) REQ'D	ULTRA-COATED ALLOY, McM CARR #91274A308 OR EQUIV. (CIP CONCRETE)
ANS	10/32 WASHER (2) REQ'D	NYLON

NOTES:
1. REINFORCING BARS ARE NOT SHOWN ON THIS DRAWING.
2. MAXIMUM ANGULAR MISALIGNMENT WHEN USING ANCHOR NUT: ±1°.
3. CENTER TO CENTER, END AND EDGE DISTANCE DEPENDS ON THE LOCATION OF THE BAR AND CONCRETE STRENGTH, (SEE TABLE).
4. C/C DISTANCE = 2 X END DISTANCE - 2 X CONCRETE COVER (2" ASSUMED). TIGHTER C/C DISTANCE SHOULD BE EVALUATED.
5. GTI DUCT IS DELIVERED IN STRAIGHT SECTIONS AND IS NOT INTENDED TO BE COILED.
6. BURSTING REINFORCEMENT IS NOT SHOWN AND WILL BE INCLUDED WITH THE SHOP DRAWINGS.
7. PART B36E52210 IS CONNECTED TO U0600810 TO CREATE PART B36E50210.
8. INSTALL #237 NEOPRENE O-RING IN GROOVE USING DROPS OF LIQUID ADHESIVE BEFORE SHIPPING.
9. FOR PRE-CAST SEGMENTS, USE (2) THREADED INSERTS WITH 3/8"-16UNC OD, 10-32 ID, .406" LONG, McMASTER CARR #90248A068 OR EQUIVALENT. ALSO USE (2) 10-32 NYLON 6/6 PAN HEAD SLOTTED SCREWS, 1" LONG, McMASTER CARR #93135A833 OR EQUIVALENT WITH NYLON WASHERS. THESE SCREWS ARE RIPPED OUT WHEN SEGMENT IS SEPARATED. REMOVE INSERTS AFTER THE SEGMENTS ARE SEPERATED AND RE-USE.

APPROVED BY FDOT 9-22-08

OWNER:

CONTRACTOR:

PROJECT:

1-3/8" PT BAR SYSTEM 100 STRESSABLE ⚠1 ANCHORAGE AND BAR COUPLING ASSEMBLY

DATE: 12-11-07 | DWG: I. TIRA/G.M. | CHK: SN | APP: EA

THIS DRAWING, THE PERTINENT ENCLOSURES, DESCRIPTIONS, CALCULATIONS ETC. AND THEIR CONTENTS ARE THE PROPERTY OF **DYWIDAG SYSTEMS INTERNATIONAL, USA, INC.** THEY ARE NOT ALLOWED TO BE DUPLICATED WITHOUT OUR PERMISSION. THEY ARE ALSO NOT TO BE SHOWN OR EXPLAINED FOR ANY REASON TO A THIRD PARTY OTHER THAN FOR REASONS EXPRESSLY INTENDED BY **DSI's** SUBMITTAL TO THE ORIGINAL RECEIVER. THEY HAVE TO BE RETURNED UPON REQUEST.

DYWIDAG SYSTEMS INTERNATIONAL, USA INC. DOES NOT ASSUME ANY LIABILITY FOR THE DESIGN OF THIS STRUCTURE. THIS SHOP DRAWING IS INTENDED TO PROVIDE POST TENSIONING DETAILS ONLY.

WEIGHT	REV.	DATE	ISSUE DESCRIPTION	NAME	CHKD.	JOB NUMBER
WEIGHT	1	08-15-08	FOR APPROVAL	G.M.	S.N.	
SCALE 1 : 3						DRAWING NUMBER: PT 36E 031

DYWIDAG-SYSTEMS INTERNATIONAL, USA, INC.
POST TENSIONING / REINFORCING UNIT PHONE: 630-739-1100
320 MARMON DRIVE - BOLINGBROOK, IL FAX: 630-739-1405

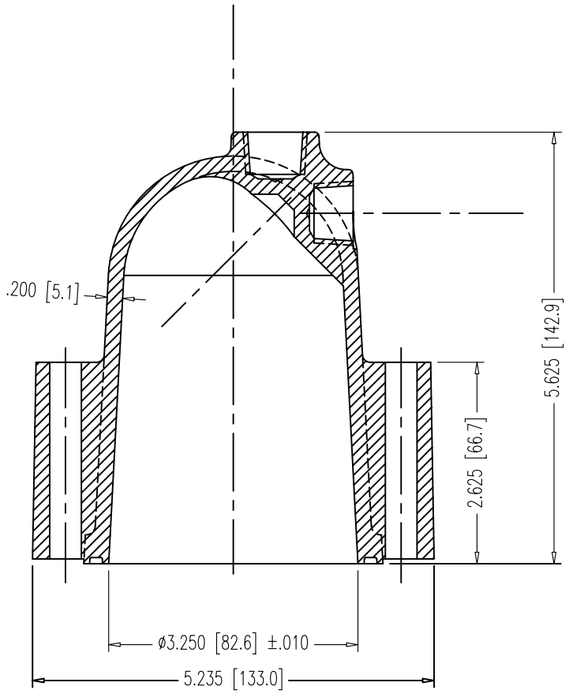

SECTION A–A

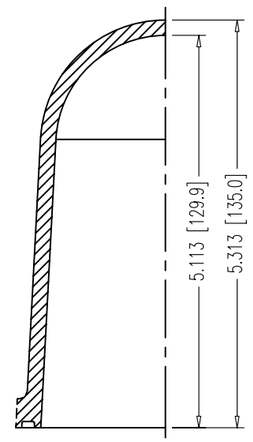

SECTION B–B

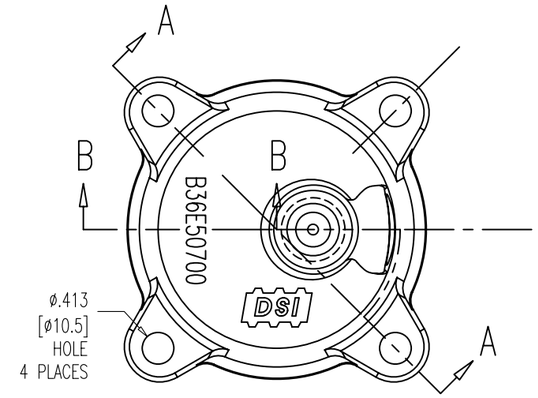

TOP VIEW

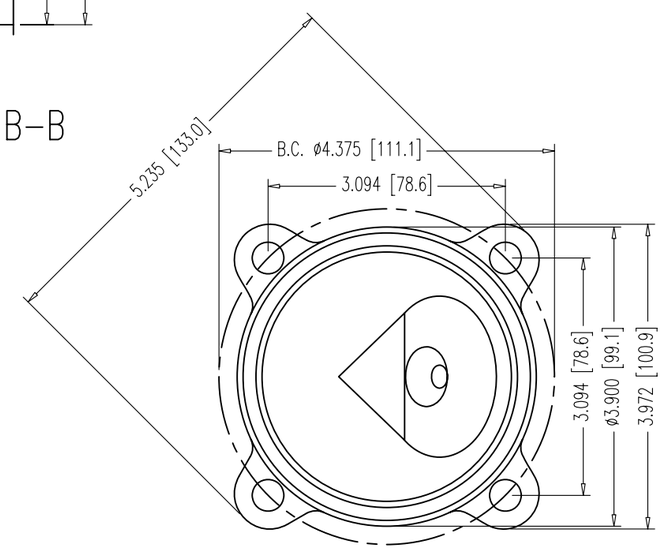

BOTTOM VIEW

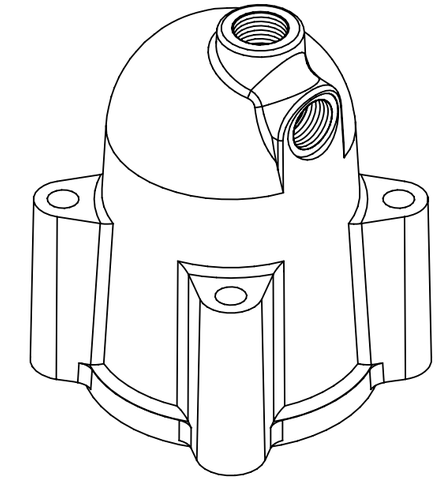

NOTES:

1. USE 3/8"–16UNC 316L S.S. HEX BOLTS, 3–1/4" LONG 00 00 783 W/SMALL DIA. WASHER 00 00 774.
2. INSTALL O–RING IN GROOVE USING DROPS OF LIQUID ADHESIVE BEFORE SHIPPING.
3. THE NYLON CELL CLASSIFICATION SHALL CONFORM TO ASTM D5989 AND SHALL BE S–PA0141 (WEATHER RESISTANT), S–PA0231 OR S–PA0401 (TENSILE STRENGTH, YIELD 15000 PSI MIN., WITH UV STABILIZER ADDED).
4. INSTALL #237 O–RING 3–3/8"x3–5/8"x1/8" IN CAP (SEE O–RING SPECIFICATIONS).
5. DRILL 1/2" [12.7] HOLE IN PORT BEING USED–CAUTION–RECOMMEND USING HOLE SAW BIT OR SPADE BIT (BY OTHERS), BE CAREFULL TO PREVENT DAMAGE TO THREADS OR CAP.
6. WHEN PRESSURIZING GROUT CAPS, DO NOT STAND BEHIND CAPS!

Furnish O-ring materials conforming to the following requirements:

Mechanical Properties:

Shore hardness A ASTM D2240 30 -75
Ultimate elongation % ASTM D412 > 300
Tension Set @ 100%, 200% & ultimate elongation ASTM D412 < 5
Tear Strength Die T , pli ASTM D624 110

Accelerated Testing:

Thermal Deterioration 70 hours @ 125 C ASTM D573
Change in tensile strength % < 3
Change of elongation % <25
Change of hardness % < 5
Compression Set 22 hours @ 125 C % ASTM D573 < 20

Volume change due to absorption of H_2O for 70 hours @ 257^0 F (125^{0}C) ASTM D471 ≤ 5 percent

Environmental Resistance

Ozone Resistance 70 hours @ 40 C & 50 MPa partial ozone pressure ASTM D1149 No Cracks

Low Temp. @ -20 C ASTM D746 Not Brittle Pass

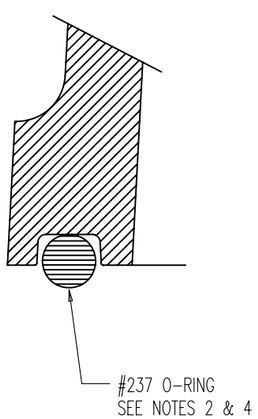

GROOVE DETAIL

SCALE 5:1 IN COMPUTER

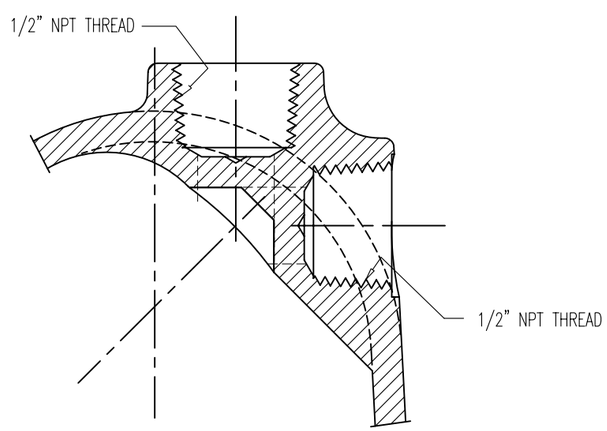

GROUT PORT DETAIL

SCALE 2:1 IN COMPUTER

Tolerance Note:	
All tolerances are based	
on SPI/SPE and should	
be as follows unless	
specified otherwise:	
Dim.	Tolerance
0-1" =	+/- 0.005"
1-2" =	+/- 0.007"
2-3" =	+/- 0.009"
3-4" =	+/- 0.011"
4-5" =	+/- 0.013"
5-6" =	+/- 0.015"

APPROVED BY FDOT 9-22-08

DIMENSIONS: INCH [mm]
mm FOR REFERENCE ONLY

QUALITY PLAN NUMBER:
QS60072300P

BAR GROUT CAP WITH O-RING FOR ALL 1" & 1-1/4" NUTS AND 1-3/8" ANCHOR NUT

DATE: 10-02-06 | DWG: G. MALECKI | CHK: E.A. | APP: K.S.

THIS DRAWING, THE PERTINENT ENCLOSURES, DESCRIPTIONS, CALCULATIONS ETC. AND THEIR CONTENTS ARE THE PROPERTY OF **DYWIDAG SYSTEMS INTERNATIONAL, USA, INC.** THEY ARE NOT ALLOWED TO BE DUPLICATED WITHOUT OUR PERMISSION. THEY ARE ALSO NOT TO BE SHOWN OR EXPLAINED FOR ANY REASON TO A THIRD PARTY OTHER THAN FOR REASONS EXPRESSLY INTENDED BY **DSI's** SUBMITTAL TO THE ORIGINAL RECEIVER. THEY HAVE TO BE RETURNED UPON REQUEST.

TOLERANCES: SEE TOLERANCE NOTE

WEIGHT 0.817 LBS.

REV.	DATE	NAME	

MATERIAL: NYLON 6 20% GLASS FIBER FILLED COLOR: BLACK

SCALE 1:2 UNLESS NOTED

PART NUMBER: **B36E50700**

DRAWING NUMBER: **B36E50700**

DYWIDAG-SYSTEMS INTERNATIONAL, USA, INC.
320 MARMON DRIVE - BOLINGBROOK, IL 60440
PHONE: 630-739-1100 FAX: 630-739-1405

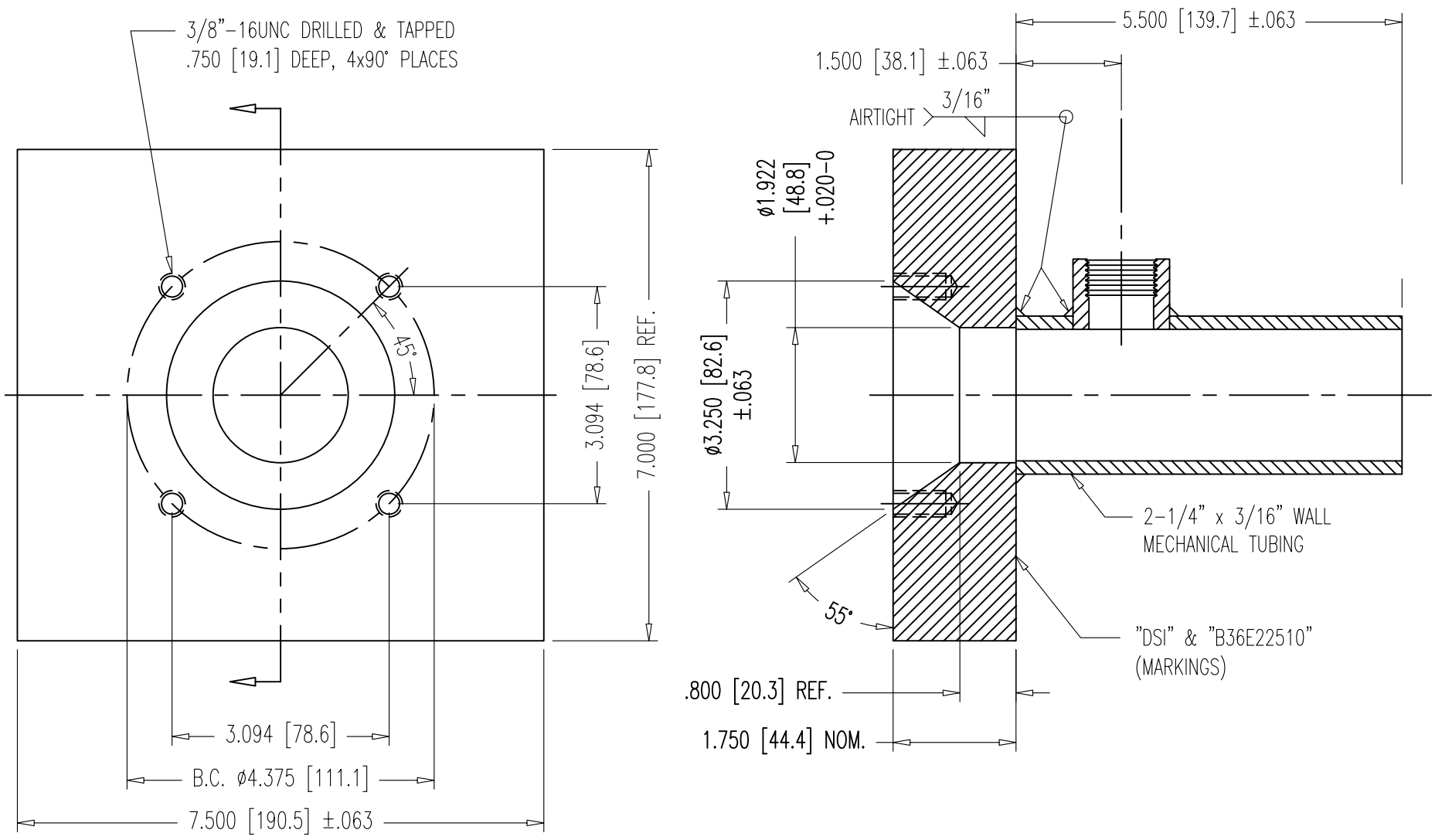

NOTES:
1. ALSO SUITABLE FOR GR 160 THREADBAR.
2. PLATE AND PIPE GALVANIZED ACCORDING TO TO ASTM A123 AFTER WELDING.
3. 59mm DUCT U00220400 FITS OVER TUBING.
4. SEE DRAWING B00E21191 FOR RAW MATERIAL PLATE WITHOUT HOLES.

MECHANICAL TUBE MATERIAL
SHALL BE A512, A513 OR A519.

APPROVED BY FDOT 9-22-08

DIMENSIONS: INCH [mm] mm FOR REFERENCE ONLY	QUALITY PLAN NUMBER: QBE0021200L	TOLERANCES: ±.020 UNLESS NOTED	WEIGHT: 25.8 LBS.	REV.	DATE	NAME		PART NUMBER: B36E22510
SQUARE BEARING PLATE WITH EXIT PIPE FOR 1-3/8" THREADBAR		PLATE MATERIAL: SEE MAT'L SPEC. PME0021100P TUBE MATERIAL: SEE ABOVE	SCALE 1:3					DRAWING NUMBER: B36E22510
DATE: 08-16-07	DWG: G. MALECKI	CHK: S.N.	APP: E.A.					

THIS DRAWING, THE PERTINENT ENCLOSURES, DESCRIPTIONS, CALCULATIONS ETC. AND THEIR CONTENTS ARE THE PROPERTY OF **DYWIDAG SYSTEMS INTERNATIONAL, USA, INC.** THEY ARE NOT ALLOWED TO BE DUPLICATED WITHOUT OUR PERMISSION. THEY ARE ALSO NOT TO BE SHOWN OR EXPLAINED FOR ANY REASON TO A THIRD PARTY OTHER THAN FOR REASONS EXPRESSLY INTENDED BY **DSI's** SUBMITTAL TO THE ORIGINAL RECEIVER. THEY HAVE TO BE RETURNED UPON REQUEST.

DYWIDAG-SYSTEMS INTERNATIONAL, USA, INC.
320 MARMON DRIVE - BOLINGBROOK, IL 60440
PHONE: 630-739-1100 FAX: 630-739-1405

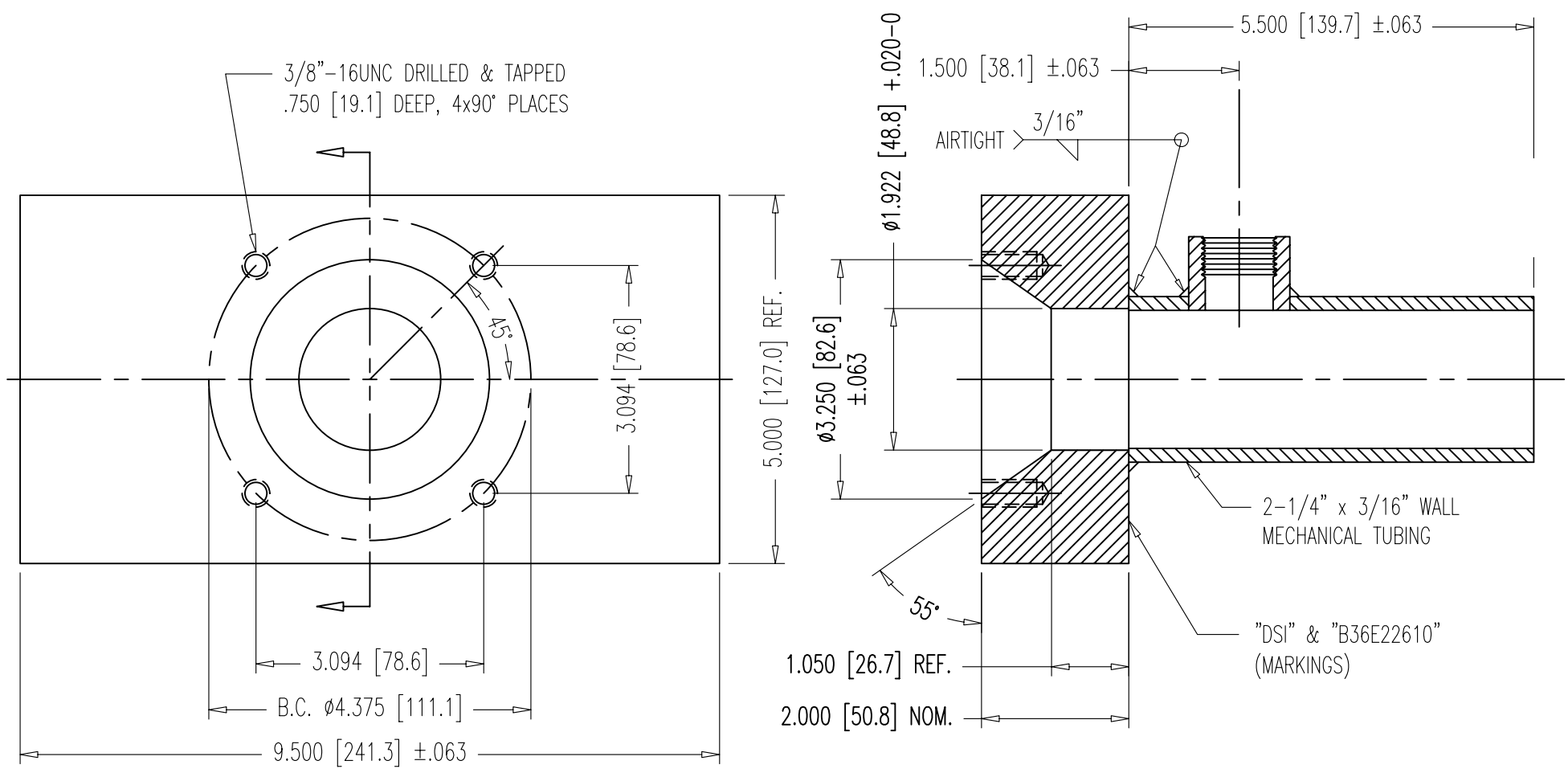

NOTES:
1. ALSO SUITABLE FOR GR 160 THREADBAR.
2. PLATE AND PIPE GALVANIZED ACCORDING TO TO ASTM A123 AFTER WELDING.
3. 59mm DUCT U00220400 FITS OVER TUBING.
4. SEE DRAWING B00E21192 FOR RAW MATERIAL PLATE WITHOUT HOLES.

MECHANICAL TUBE MATERIAL
SHALL BE A512, A513 OR A519.

APPROVED BY FDOT 9-22-08

DIMENSIONS: INCH [mm] mm FOR REFERENCE ONLY	QUALITY PLAN NUMBER: QBE0021200L

RECT. BEARING PLATE WITH EXIT PIPE FOR 1-3/8" THREADBAR

DATE: 08-16-07	DWG: G. MALECKI	CHK: S.N.	APP: E.A.

THIS DRAWING, THE PERTINENT ENCLOSURES, DESCRIPTIONS, CALCULATIONS ETC. AND THEIR CONTENTS ARE THE PROPERTY OF **DYWIDAG SYSTEMS INTERNATIONAL, USA, INC.** THEY ARE NOT ALLOWED TO BE DUPLICATED WITHOUT OUR PERMISSION. THEY ARE ALSO NOT TO BE SHOWN OR EXPLAINED FOR ANY REASON TO A THIRD PARTY OTHER THAN FOR REASONS EXPRESSLY INTENDED BY **DSI's** SUBMITTAL TO THE ORIGINAL RECEIVER. THEY HAVE TO BE RETURNED UPON REQUEST.

TOLERANCES: ±.020 UNLESS NOTED

WEIGHT: 26.5 LBS.

PLATE MATERIAL: SEE MAT'L SPEC. PME0021100P
TUBE MATERIAL: SEE ABOVE

SCALE 1:3

REV.	DATE	NAME	

PART NUMBER: **B36E22610**

DRAWING NUMBER: **B36E22610**

DYWIDAG-SYSTEMS INTERNATIONAL, USA, INC.
320 MARMON DRIVE - BOLINGBROOK, IL 60440
PHONE: 630-739-1100 FAX: 630-739-1405

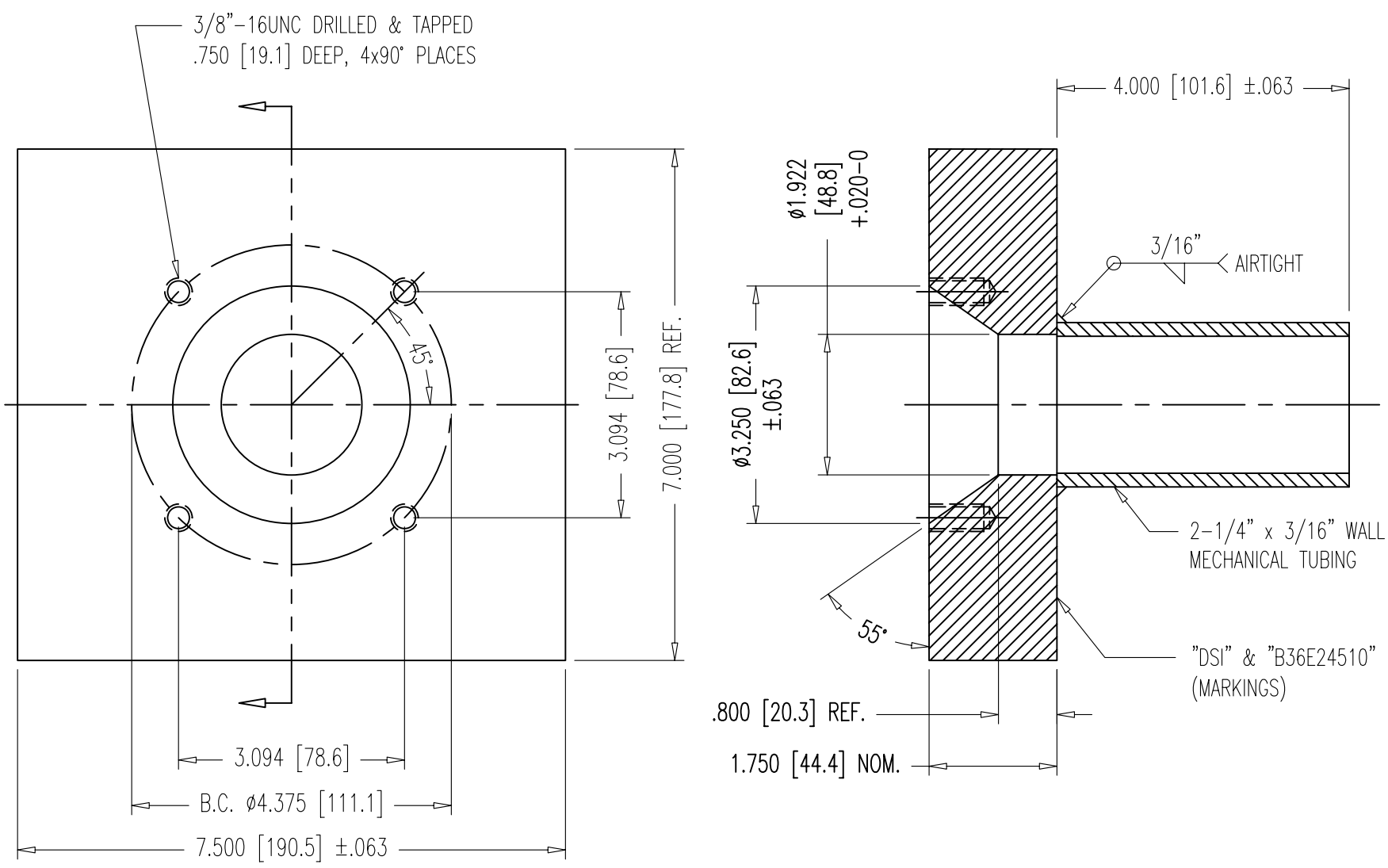

NOTES:
1. ALSO SUITABLE FOR GR 160 THREADBAR.
2. PLATE AND PIPE GALVANIZED ACCORDING TO TO ASTM A123 AFTER WELDING.
3. 59mm DUCT U00220400 FITS OVER TUBING.
4. SEE DRAWING B00E21191 FOR RAW MATERIAL PLATE WITHOUT HOLES.

MECHANICAL TUBE MATERIAL
SHALL BE A512, A513 OR A519.

APPROVED BY FDOT 9-22-08

DIMENSIONS: INCH [mm] mm FOR REFERENCE ONLY	QUALITY PLAN NUMBER: QBE0021200L	TOLERANCES: ±.020 UNLESS NOTED	WEIGHT: 25.8 LBS.	REV.	DATE	NAME		PART NUMBER: B36E24510
SQUARE BEARING PLATE WITH EXIT PIPE FOR 1-3/8" THREADBAR		PLATE MATERIAL: SEE MAT'L SPEC. PME0021100P TUBE MATERIAL: SEE ABOVE	SCALE 1:3					DRAWING NUMBER: B36E24510
DATE: 12-04-07	DWG: G. MALECKI	CHK: S.N.	APP: E.A.					

THIS DRAWING, THE PERTINENT ENCLOSURES, DESCRIPTIONS, CALCULATIONS ETC. AND THEIR CONTENTS ARE THE PROPERTY OF **DYWIDAG SYSTEMS INTERNATIONAL, USA, INC.** THEY ARE NOT ALLOWED TO BE DUPLICATED WITHOUT OUR PERMISSION. THEY ARE ALSO NOT TO BE SHOWN OR EXPLAINED FOR ANY REASON TO A THIRD PARTY OTHER THAN FOR REASONS EXPRESSLY INTENDED BY **DSI's** SUBMITTAL TO THE ORIGINAL RECEIVER. THEY HAVE TO BE RETURNED UPON REQUEST.

DYWIDAG-SYSTEMS INTERNATIONAL, USA, INC.
320 MARMON DRIVE - BOLINGBROOK, IL 60440
PHONE: 630-739-1100 FAX: 630-739-1405

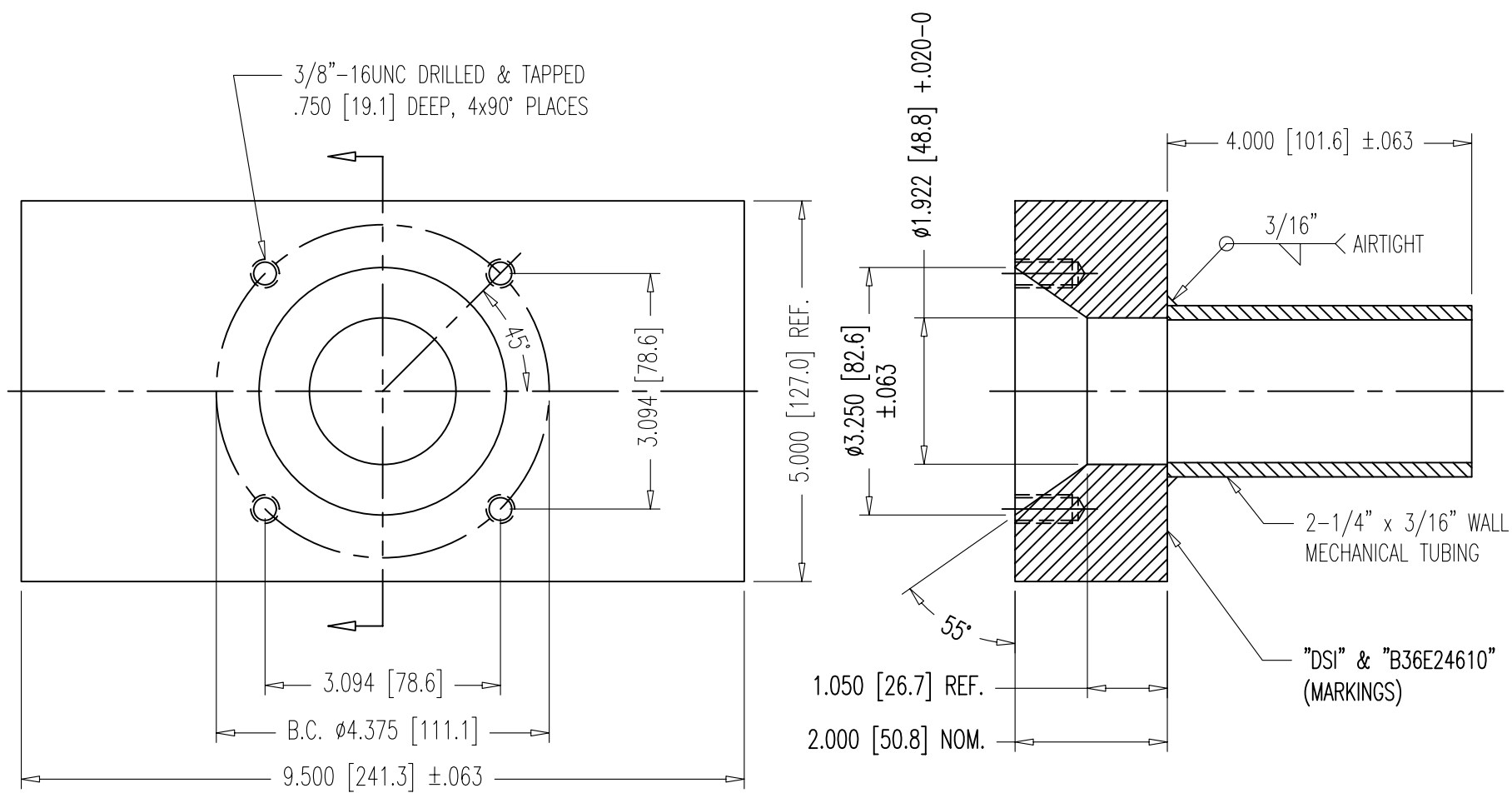

NOTES:
1. ALSO SUITABLE FOR GR 160 THREADBAR.
2. PLATE AND PIPE GALVANIZED ACCORDING TO TO ASTM A123 AFTER WELDING.
3. 59mm DUCT U00220400 FITS OVER TUBING.
4. SEE DRAWING B00E21192 FOR RAW MATERIAL PLATE WITHOUT HOLES.

MECHANICAL TUBE MATERIAL
SHALL BE A512, A513 OR A519.

APPROVED BY FDOT 9-22-08

DIMENSIONS: INCH [mm] mm FOR REFERENCE ONLY	QUALITY PLAN NUMBER: QBE0021200L	TOLERANCES: ±.020 UNLESS NOTED	WEIGHT: 26 LBS.	REV.	DATE	NAME		PART NUMBER: B36E24610
RECT. BEARING PLATE WITH EXIT PIPE FOR 1-3/8" THREADBAR		PLATE MATERIAL: SEE MAT'L SPEC. PME0021100P TUBE MATERIAL: SEE ABOVE	SCALE 1:3					DRAWING NUMBER: B36E24610
DATE: 12-04-07	DWG: G. MALECKI	CHK: S.N.	APP: E.A.					

THIS DRAWING, THE PERTINENT ENCLOSURES, DESCRIPTIONS, CALCULATIONS ETC. AND THEIR CONTENTS ARE THE PROPERTY OF **DYWIDAG SYSTEMS INTERNATIONAL, USA, INC.** THEY ARE NOT ALLOWED TO BE DUPLICATED WITHOUT OUR PERMISSION. THEY ARE ALSO NOT TO BE SHOWN OR EXPLAINED FOR ANY REASON TO A THIRD PARTY OTHER THAN FOR REASONS EXPRESSLY INTENDED BY **DSI's** SUBMITTAL TO THE ORIGINAL RECEIVER. THEY HAVE TO BE RETURNED UPON REQUEST.

DYWIDAG-SYSTEMS INTERNATIONAL, USA, INC.
320 MARMON DRIVE - BOLINGBROOK, IL 60440
PHONE: 630-739-1100 FAX: 630-739-1405

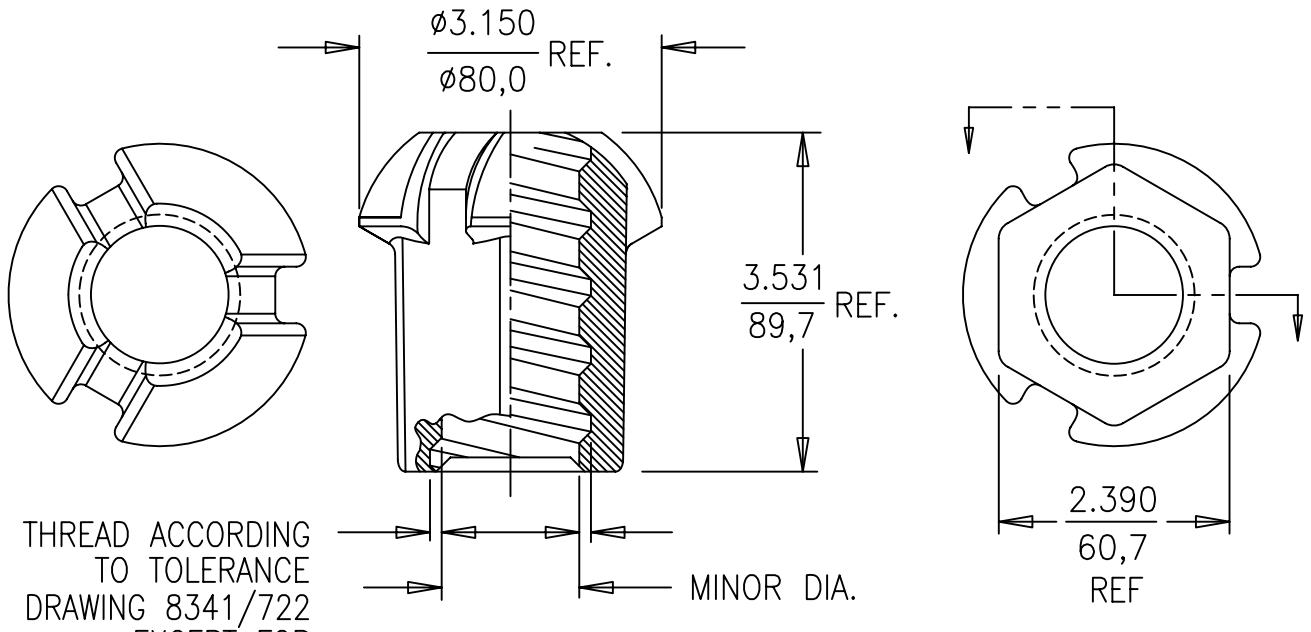

THREAD ACCORDING TO TOLERANCE DRAWING 8341/722 EXCEPT FOR MINOR DIA. SPECIFIED BELOW

NOTES:
1. ALL DIMENSIONS ARE FOR UNCOATED PARTS.
2. I.D. DEVIATES FROM STANDARD THREADFORM DRAWING.

PART NUMBER	HEAT TREATMENT	APPLICATION	MINOR DIA. IN. (mm)
B36E24210	NORMALIZED BHN = 180–220	FOR USE WITH UNCOATED BAR NOT REUSABLE	1.429–1.433 (36.30–36.40)
B36E24220	QUENCHED & TEMPERED BHN = 269–302	FOR USE WITH UNCOATED BAR REUSABLE NUT	1.434–1.438 (36.42–36.53)
B36E24251	QUENCHED & TEMPERED BHN = 269–302	RAW MATERIAL FOR B36E24255 & B36E24258	1.450–1.454 (36.83–36.93)
B36E24255	QUENCHED & TEMPERED BHN = 269–302	PART IS EPOXY COATED EXCEPT FOR THREAD, FOR USE WITH EPOXY COATED BAR	1.450–1.454 (36.83–36.93)
B36E24258	QUENCHED & TEMPERED BHN = 269–302	PART IS HOT DIPPED GALVANIZED EXCEPT FOR THREAD, FOR USE WITH GALVANIZED BAR (ASTM A123)	1.450–1.454 (36.83–36.93)

COATING SPECIFICATIONS		
	EPOXY COATING	GALVANIZING
HARDWARE	ASTM A775 OR AASHTO M284 7–12 MIL OR (2) ASTM A934	ASTM A153
THREADBAR		ASTM A123

APPROVED BY FDOT 9-22-08

DIMENSIONS: INCH/mm mm FOR REFERENCE ONLY	QUALITY PLAN NUMBER: QBE0020100F	TOLERANCES: ±.035 UNLESS NOTED	WEIGHT 3:2 LBS.	REV.	DATE	NAME		PART NUMBER: SEE TABLE
1-3/8" GROUTABLE ANCHOR NUTS FOR THREADBAR GR. 150		MATERIAL: SEE DRAWING B36E24290	SCALE 1:2	1	03-23-06	C.S.		
				2	11-09-07	S.Y.		DRAWING NUMBER: **B36E24200**
DATE: 06-07-05	DWG: G. MALECKI	CHK: H.K.	APP: K.S.					

THIS DRAWING, THE PERTINENT ENCLOSURES, DESCRIPTIONS, CALCULATIONS ETC. AND THEIR CONTENTS ARE THE PROPERTY OF **DYWIDAG SYSTEMS INTERNATIONAL, USA, INC.** THEY ARE NOT ALLOWED TO BE DUPLICATED WITHOUT OUR PERMISSION. THEY ARE ALSO NOT TO BE SHOWN OR EXPLAINED FOR ANY REASON TO A THIRD PARTY OTHER THAN FOR REASONS EXPRESSLY INTENDED BY **DSI's** SUBMITTAL TO THE ORIGINAL RECEIVER. THEY HAVE TO BE RETURNED UPON REQUEST.

DYWIDAG-SYSTEMS INTERNATIONAL, USA, INC.
320 MARMON DRIVE - BOLINGBROOK, IL 60440
PHONE: 630-739-1100 FAX: 630-739-1405

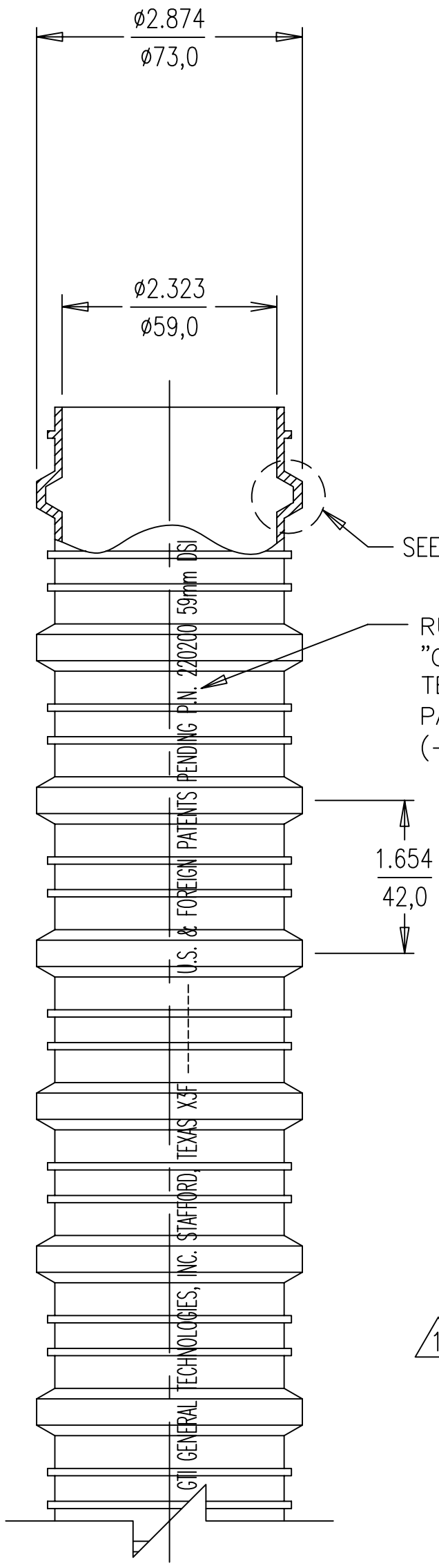

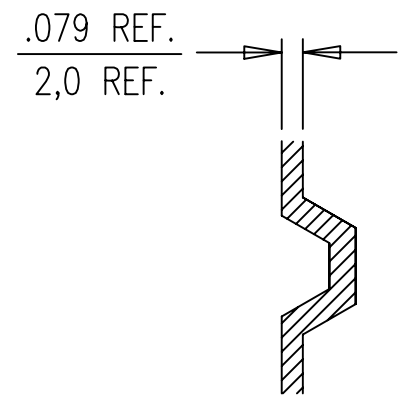

DETAIL
SCALE 1:1

RUNNING LATEX PRINT: (1)
"GTI GENERAL TECHNOLOGIES, INC. STAFFORD, TEXAS X3F -------- U.S. & FOREIGN PATENTS PENDING P.N. 220200 59mm DSI"
(-------- = BATCH NUMBER).

MATERIAL SPECIFICATIONS:
MANUFACTURE DUCTS FROM NON-COLORED, UNFILLED POLYPROPYLENE MEETING THE REQUIREMENTS OF ASTM D4101 WITH A CELL CLASSIFICATION RANGE OF PP0340B14541 TO PP0340B67884. THE DUCT SHALL BE WHITE IN COLOR CONTAINING ANTIOXIDANT(S) WITH A MINIMUM OXIDATION INDUCTION TIME (OIT) ACCORDING TO ASTM D 3895 OF 20 MINUTES AND CONTAINING A NON-YELLOWING LIGHT STABILIZER.

NOTES:
1. GTI GENERAL TECHNOLOGIES, INC. STAFFORD, TEXAS X3F -------- U.S. & FOREIGN PATENTS PENDING P.N. 220200 59mm DSI (-------- IS BATCH NO.).
2. REFERENCE GTI DRAWING 220200.
3. (1) STANDARD FIT FOR 5-0.6", 7-0.5", 7-0.6" AND 9-0.5" STRANDS.
4. THIS DRAWING IS NOT INTENDED FOR MANUFACTURING PURPOSES.
5. Min. BENDING RADIUS, Rmin = 22.8 FT.
6. DUCT IS DELIVERED IN STRAIGHT SECTIONS AND IS NOT INTENDED TO BE COILED.

(1) → PART WAS U00220400.

APPROVED BY FDOT 9-22-08

DIMENSIONS: INCH [mm] mm FOR REFERENCE ONLY	QUALITY PLAN NUMBER: QU00041110P	TOLERANCES: ±.020 UNLESS NOTED	WEIGHT 0.296 LBS/FT	REV. 1	DATE 08-04-08	NAME S.N.	PART NUMBER: U00220200
2-3/8" (59mm) CORRUGATED PP DUCT		MATERIAL: SEE ABOVE	SCALE 1:2				DRAWING NUMBER: U00220200
DATE: 09-14-07	DWG: G. MALECKI	CHK: H.K.	APP: K.S.				

THIS DRAWING, THE PERTINENT ENCLOSURES, DESCRIPTIONS, CALCULATIONS ETC. AND THEIR CONTENTS ARE THE PROPERTY OF **DYWIDAG SYSTEMS INTERNATIONAL, USA, INC.** THEY ARE NOT ALLOWED TO BE DUPLICATED WITHOUT OUR PERMISSION. THEY ARE ALSO NOT TO BE SHOWN OR EXPLAINED FOR ANY REASON TO A THIRD PARTY OTHER THAN FOR REASONS EXPRESSLY INTENDED BY **DSI's** SUBMITTAL TO THE ORIGINAL RECEIVER. THEY HAVE TO BE RETURNED UPON REQUEST.

DYWIDAG-SYSTEMS INTERNATIONAL, USA, INC.
POST TENSIONING / REINFORCING UNIT PHONE: 630-739-1100
320 MARMON DRIVE - BOLINGBROOK, IL FAX: 630-739-1405

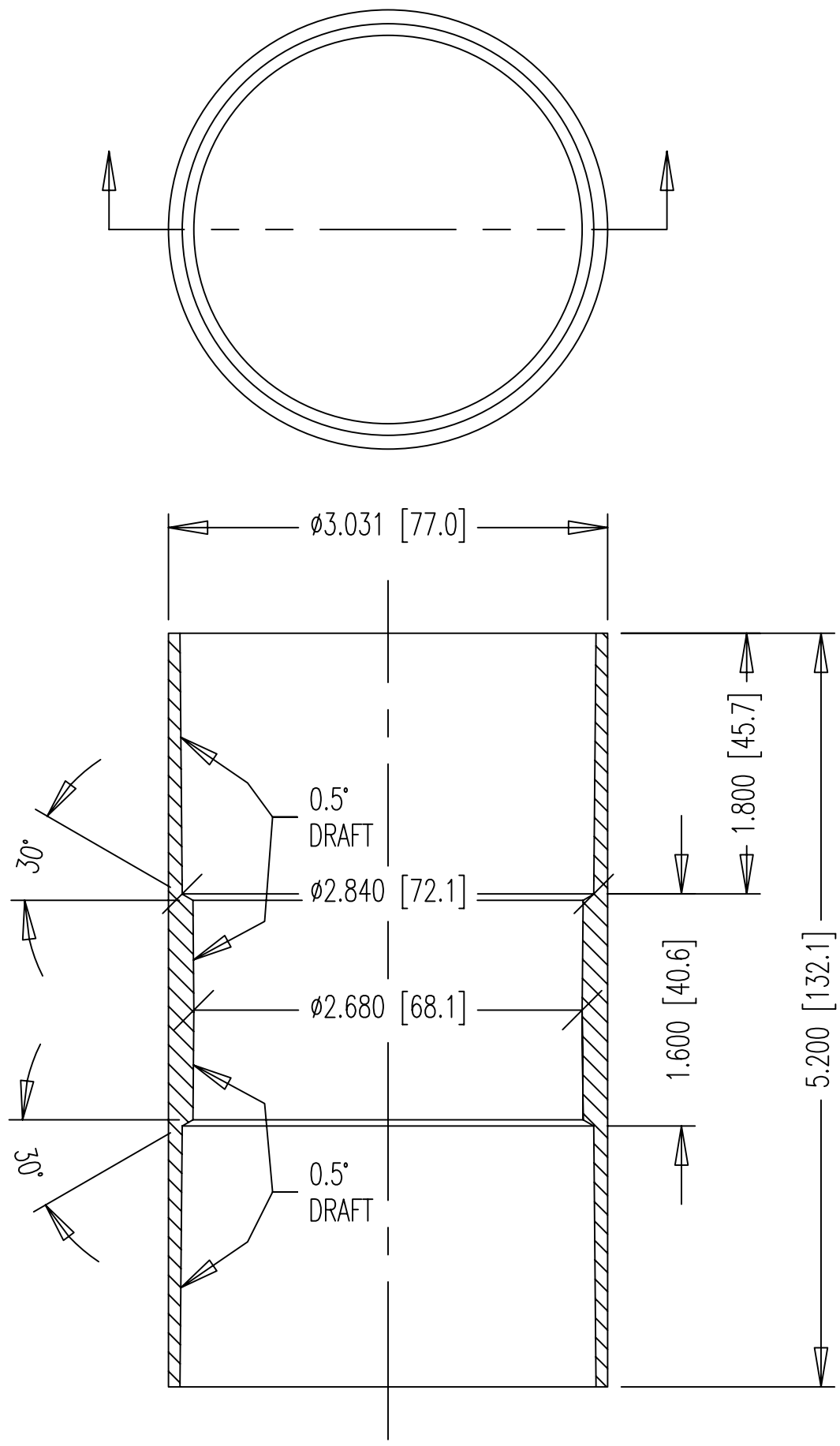

PART WAS U00220440. REFERENCE GTI DWG 220205.

APPROVED BY FDOT 9-22-08

DIMENSIONS: INCH [mm] mm FOR REFERENCE ONLY	QUALITY PLAN NUMBER: QSA0028000P	TOLERANCES: ±.005 UNLESS NOTED	WEIGHT 0.23 LBS.	REV.	DATE	NAME		PART NUMBER:
				1	08-12-08	S.N.		U00220205
Ø2-3/8" (59mm) DUCT COUPLER		MATERIAL: HDPE	SCALE 2:3					
DATE: 10-25-99	DWG: G. MALECKI	CHK: S.Y.	APP: K.S.					DRAWING NUMBER: U00220205

THIS DRAWING, THE PERTINENT ENCLOSURES, DESCRIPTIONS, CALCULATIONS ETC. AND THEIR CONTENTS ARE THE PROPERTY OF **DYWIDAG SYSTEMS INTERNATIONAL, USA, INC.** THEY ARE NOT ALLOWED TO BE DUPLICATED WITHOUT OUR PERMISSION. THEY ARE ALSO NOT TO BE SHOWN OR EXPLAINED FOR ANY REASON TO A THIRD PARTY OTHER THAN FOR REASONS EXPRESSLY INTENDED BY **DSI's** SUBMITTAL TO THE ORIGINAL RECEIVER. THEY HAVE TO BE RETURNED UPON REQUEST.

DYWIDAG-SYSTEMS INTERNATIONAL, USA, INC.
320 MARMON DRIVE - BOLINGBROOK, IL 60440
PHONE: 630-739-1100 FAX: 630-739-1405

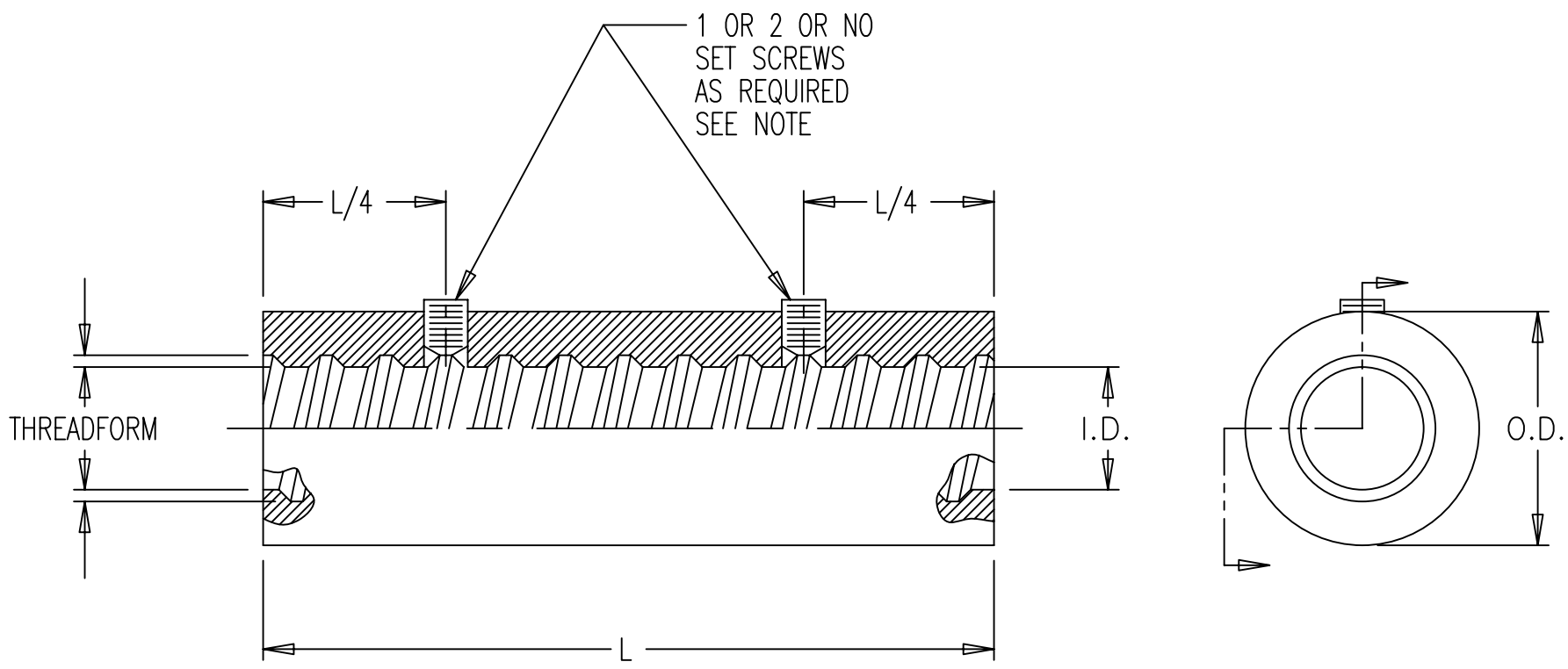

NOTES:

1. ALL COUPLERS ALSO SUITABLE FOR GRADE 160 THREADBARS.
2. LOCATE TAPPED HOLE FOR SET SCREW ON CENTER OF MAJOR DIA OF THREAD.

NOMINAL SIZE	1"	1-1/4"	1-3/8"		
PART NUMBERS FOR COUPLERS:	26mm	32mm	36mm		
WITHOUT SET SCREWS	B26E30810	B32E30810	B36E30810		
WITH 1 SET SCREW	B26E30811	B32E30811	B36E30811		
WITH 2 SET SCREWS	B26E30815	B32E30815	B36E30815		
O.D. (IN./mm)	2.000/50,8	2.375/60,3	2.750/69,9		
I.D. (IN./mm)	1.049/26,6	1.272/32,3	1.433/36,4		
L (IN./mm)	6.250/158,8	6.750/171,4	8.750/222,3		
THREADFORM: 8341/	496	754	722		
SET SCREW SIZE	3/8-16UNC	3/8-16UNC	3/8-16UNC		
TOLERANCE FOR:					
O.D. (IN.)	+0/-.003	+0/-.003	+0/-.004		
I.D. (IN.)	+0/-.004	+0/-.004	+0/-.004		
L (IN.)	±1/16	±1/16	±1/16		
WEIGHT (LBS.)	3.74	5.70	12.20		

APPROVED BY FDOT 9-22-08

DYWIDAG POST-TENSIONING SYSTEMS

FULL LOAD COUPLERS
FOR GRADE 150 THREADBAR

DATE: 04-10-90 | DWG: G. MALECKI | CHK: | APP:

This drawing, the pertinent enclossures, descriptions, calculations etc. and their contents are the property of DYWIDAG SYSTEMS INTERNATIONAL, USA, INC. They are not allowed to be duplicated with-out our permission. They are also not to be shown or explained for any reason to a third party other than for reasons expressly intended by the original receiver. They have to be returned on request.

DIMENSIONS: INCH/mm
mm FOR REFERANCE ONLY

QUALITY PLAN NUMBER:
QB00030800S

DRAWING NUMBER
B00E30810

MATERIAL:
PME0020700B 9

SCALE
1:1
FOR
1"

REV.	DATE	NAME	
4	11-15-94	K.L.	
5	03-27-96	C.S.	
6	08-12-98	A.W.	
7	12-14-98	A.W.	
8	08-08-00	A.W.	
9	08-09-04	H.K.	

DYWIDAG-SYSTEMS INTERNATIONAL, USA, INC.

RIGHT HAND THREAD

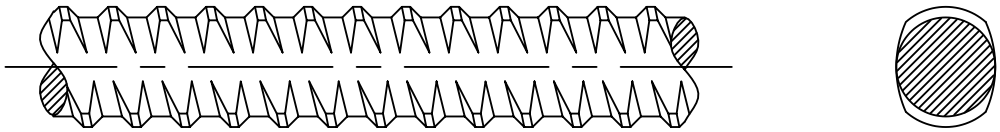

	PART NUMBERS	SPECIFICATIONS
FOR BARE BAR:	B36E CUT	ASTM A722 TYPE II
FOR EPOXY COATED BAR:	B36E COAT	ASTM A775 OR AASHTO M284
FOR GALVANIZED BAR:	B36E GALV	ASTM A123, A143 AND DWG PME0000058B

PHYSICAL PROPERTIES

EFFECTIVE AREA:	1.58 SQ.IN. (1019 SQ.mm)
ULTIMATE STRENGTH:	150 KSI (1034 N/SQ.mm)
ULTIMATE LOAD:	237 KIPS (1054 KN)
YIELD LOAD:	191.2 KIPS (851 KN)
WEIGHT:	5.56 LBS./FT. (8.27 Kg/m)
MAX. BAR ø INCL. RIBS:	1.63 IN. (41.4mm)
AVERAGE CORE ø:	1.40 IN. (35.6mm)
PITCH:	0.709 IN. (18.0mm)

NOTE:
ALL DIMENSIONS APPLY TO BARE BARS ONLY.

APPROVED BY FDOT 9-22-08

2 METRIC VALUES ADDED.

DYWIDAG POST-TENSIONING SYSTEMS

1-3/8"ø THREADBAR GRADE 150 KSI

DATE: 12-23-91 | DWG: G. MALECKI | CHK: H.K. | APP: K.S.

This drawing, the pertinent enclossures, descriptions, calculations etc. and their contents are the property of DYWIDAG SYSTEMS INTERNATIONAL, USA, INC. They are not allowed to be duplicated with-out our permission. They are also not to be shown or explained for any reason to a third party other than for reasons expressly intended by the original receiver. They have to be returned on request.

DIMENSIONS: INCH [mm] mm FOR REFERENCE ONLY

Q.A.

QUALITY PLAN NUMBER: QB00000050B

REV.	DATE	NAME
1	12-11-98	A.W.
2	06-13-03	H.K.

MATERIAL: SEE ABOVE

SCALE NTS

DRAWING NUMBER B36E00000

DYWIDAG-SYSTEMS INTERNATIONAL, USA, INC. DSI

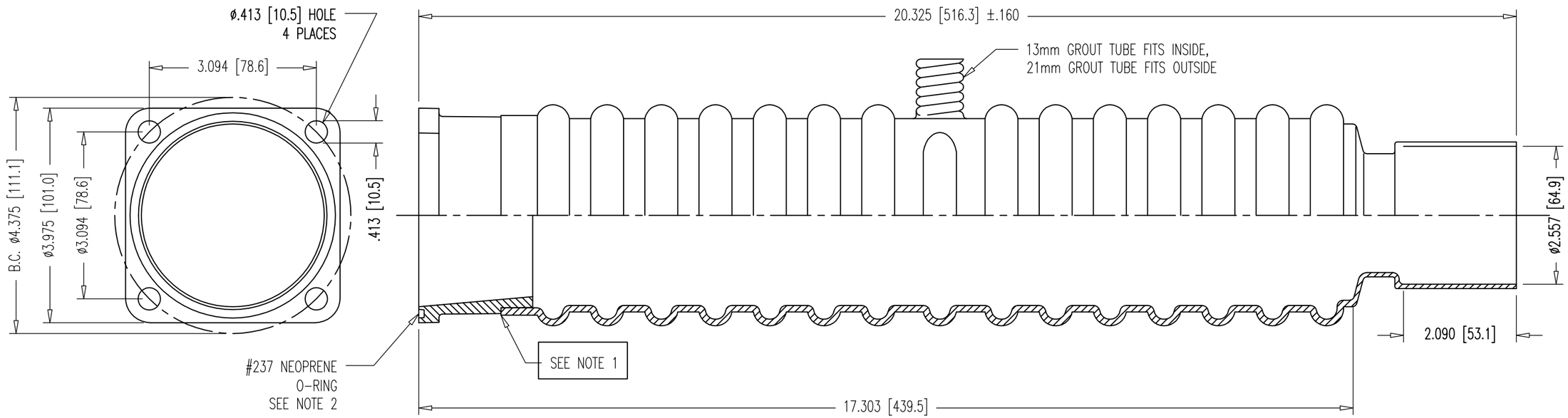

NOTES:

1. PART B36E52210 (PLATE COUPLER CONNECTOR) IS CONNECTED TO U06008010 (CORR. COUPLER HOUSING) TO CREATE PART B36E50210 (PLATE COUPLER HOUSING).
2. INSTALL #237 NEOPRENE O-RING IN GROOVE USING DROPS OF LIQUID ADHESIVE BEFORE SHIPPING.
3. FOR MATERIAL SPECIFICATIONS, SEE DRAWINGS U06008010 AND B36E52210.

APPROVED BY FDOT 9-22-08

DIMENSIONS: INCH [mm] mm FOR REFERENCE ONLY	QUALITY PLAN NUMBER:			WEIGHT LBS.	REV.	DATE	NAME		PART NUMBER: B36E50210
PLATE COUPLER HOUSING				MATERIAL: SEE DRAWINGS U06008010 AND B36E52210	SCALE 1:2				DRAWING NUMBER: B36E50210
DATE: 11-21-07	DWG: G. MALECKI	CHK: E.A.	APP: K.S.						

THIS DRAWING, THE PERTINENT ENCLOSURES, DESCRIPTIONS, CALCULATIONS ETC. AND THEIR CONTENTS ARE THE PROPERTY OF **DYWIDAG SYSTEMS INTERNATIONAL, USA, INC.** THEY ARE NOT ALLOWED TO BE DUPLICATED WITHOUT OUR PERMISSION. THEY ARE ALSO NOT TO BE SHOWN OR EXPLAINED FOR ANY REASON TO A THIRD PARTY OTHER THAN FOR REASONS EXPRESSLY INTENDED BY **DSI's** SUBMITTAL TO THE ORIGINAL RECEIVER. THEY HAVE TO BE RETURNED UPON REQUEST.

DYWIDAG-SYSTEMS INTERNATIONAL, USA, INC.
320 MARMON DRIVE - BOLINGBROOK, IL 60440
PHONE: 630-739-1100 FAX: 630-739-1405

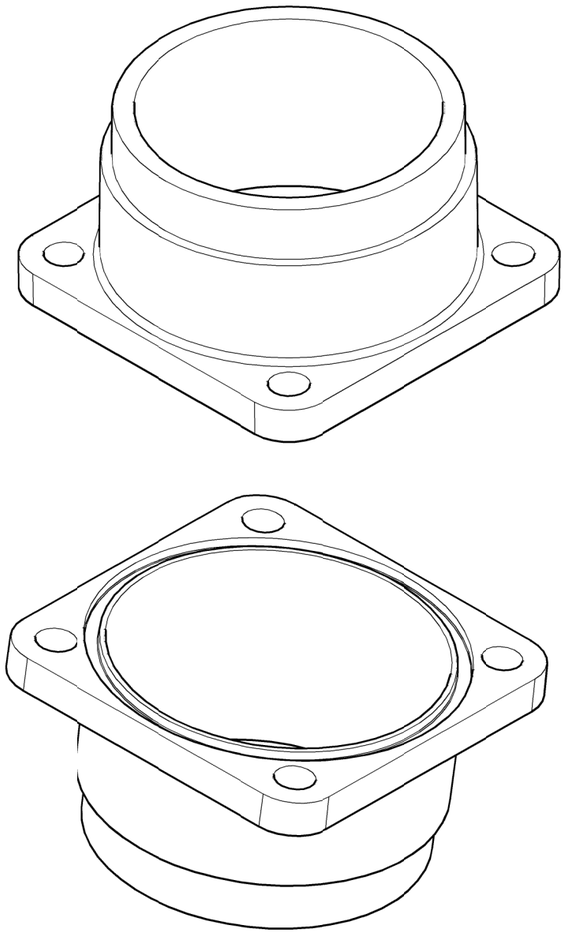

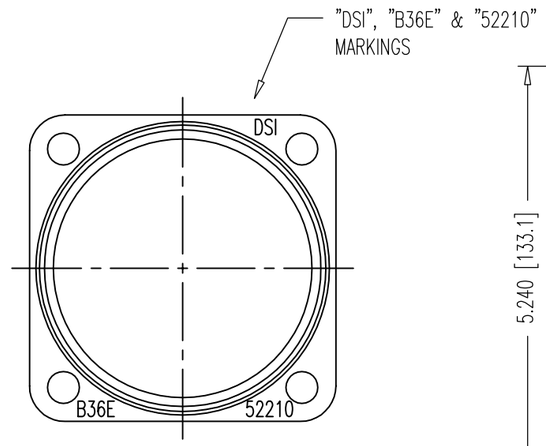

TOP VIEW

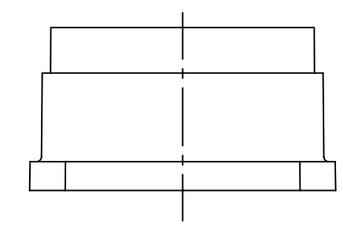

SIDE VIEW

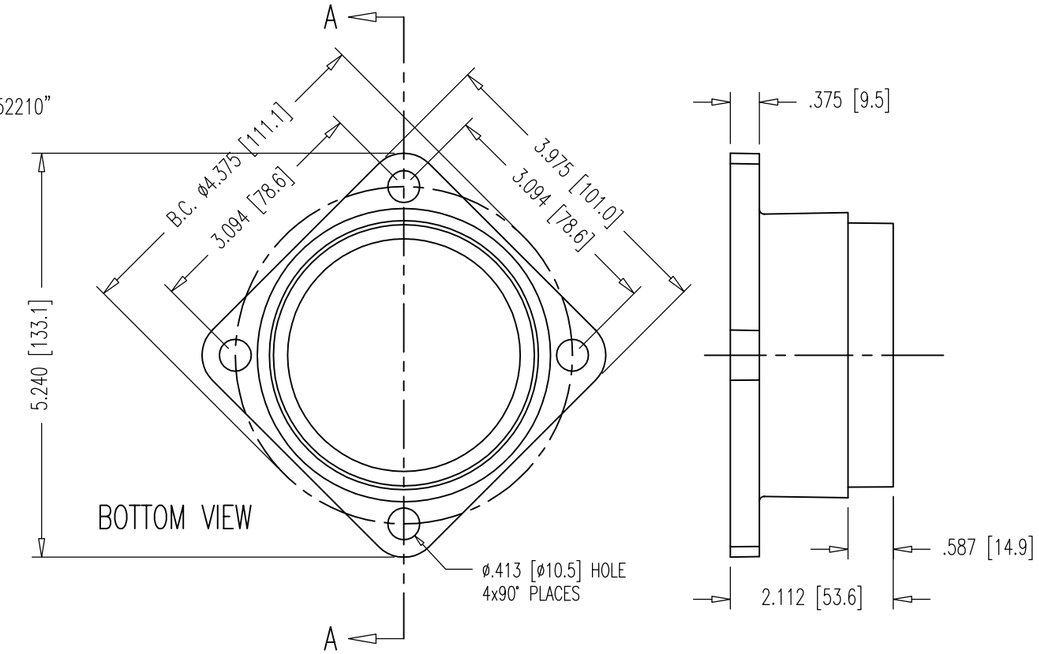

BOTTOM VIEW

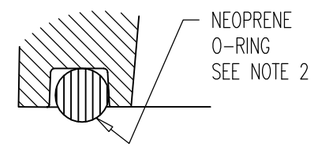

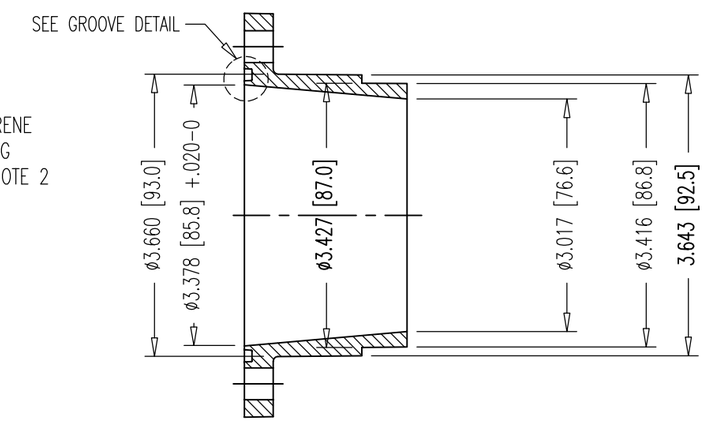

GROOVE DETAIL

SECTION A-A

APPROVED BY FDOT 9-22-08

MATERIAL SPECIFICATIONS:
MANUFACTURE PLATE COUPLER CONNECTOR FROM NON-COLORED, UNFILLED POLYETHYLENE MEETING THE REQUIREMENTS OF ASTM D4976. THE PLATE COUPLER CONNECTOR SHALL CONTAIN ANTIOXIDANT(S) WITH A MINIMUM OXIDATION INDUCTION TIME (OIT) ACCORDING TO ASTM D 3895 OF 20 MINUTES AND CONTAINING A NON-YELLOWING LIGHT STABILIZER. THE STRESS CRACK RESISTANCE TEST OF THE PLATE COUPLER CONNECTOR SHALL RESULT IN A MINIMUM FAILURE TIME OF 3 HOURS ACCORDING TO ASTM F 2136 AT AN APPLIED STRESS OF 348 PSI

NOTES:
1. USE 3/8"-16UNC GALV. S.H.C.S. BOLTS, 1" LONG.
2. INSTALL #237 NEOPRENE O-RING 3-3/8"x3-5/8"x1/8" IN GROOVE IN CAP USING DROPS OF LIQUID ADHESIVE BEFORE SHIPPING.

DIMENSIONS: INCH [mm] mm FOR REFERENCE ONLY	QUALITY PLAN NUMBER:	TOLERANCES: ±.020 UNLESS NOTED	WEIGHT XX LBS.	REV.	DATE	NAME		PART NUMBER: B36E52210
PLATE COUPLER CONNECTOR		MATERIAL: SEE ABOVE	SCALE 1:2 2:3 5:2 5:1					DRAWING NUMBER: B36E52210
DATE: 10-15-07	DWG: G. MALECKI	CHK: E.A.	APP: K.S.					

THIS DRAWING, THE PERTINENT ENCLOSURES, DESCRIPTIONS, CALCULATIONS ETC. AND THEIR CONTENTS ARE THE PROPERTY OF **DYWIDAG SYSTEMS INTERNATIONAL, USA, INC.** THEY ARE NOT ALLOWED TO BE DUPLICATED WITHOUT OUR PERMISSION. THEY ARE ALSO NOT TO BE SHOWN OR EXPLAINED FOR ANY REASON TO A THIRD PARTY OTHER THAN FOR REASONS EXPRESSLY INTENDED BY **DSI's** SUBMITTAL TO THE ORIGINAL RECEIVER. THEY HAVE TO BE RETURNED UPON REQUEST.

DYWIDAG-SYSTEMS INTERNATIONAL, USA, INC.
320 MARMON DRIVE - BOLINGBROOK, IL 60440
PHONE: 630-739-1100 FAX: 630-739-1405

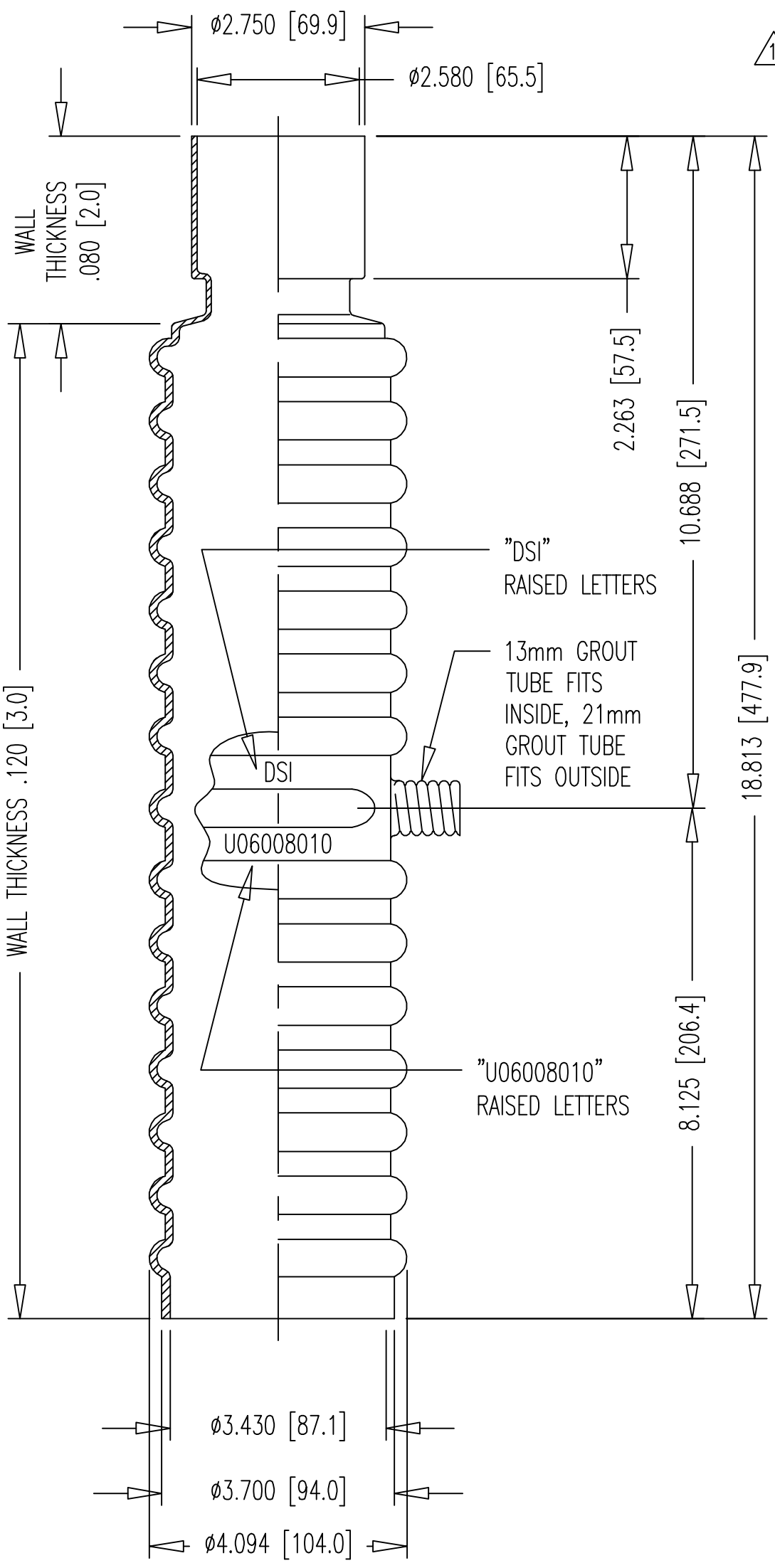

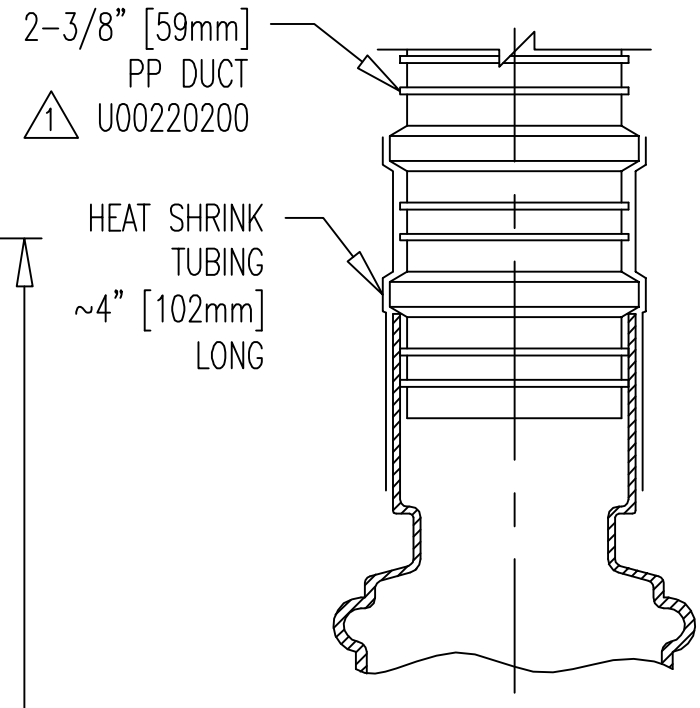

MATERIAL SPECIFICATIONS:
MANUFACTURE COUPLER HOUSING FROM NON-COLORED, UNFILLED POLYETHYLENE MEETING THE REQUIREMENTS OF ASTM D4976. THE COUPLER HOUSING SHALL BE WHITE IN COLOR CONTAINING ANTIOXIDANT(S) WITH A MINIMUM OXIDATION INDUCTION TIME (OIT) ACCORDING TO ASTM D 3895 OF 20 MINUTES AND CONTAINING A NON-YELLOWING LIGHT STABILIZER. THE STRESS CRACK RESISTANCE TEST OF THE COUPLER HOUSING SHALL RESULT IN A MINIMUM FAILURE TIME OF 3 HOURS ACCORDING TO F 2136 AT AN APPLIED STRESS OF 348 PSI

NOTES:
1. WALL THICKNESS AS SHOWN
2. ALL DIMENSIONS MEASURED.

APPROVED BY FDOT 9-22-08

DIMENSIONS: INCH [mm] mm FOR REFERENCE ONLY	QUALITY PLAN NUMBER: QUA0060810P	TOLERANCES: ±.060 UNLESS NOTED	WEIGHT 0.49 LBS.	REV. 1	DATE 09-23-08	NAME S.N.	PART NUMBER: U06008010
CORRUGATED PE COUPLER HOUSING		MATERIAL: SEE ABOVE	SCALE 1:3				DRAWING NUMBER: U06008010
DATE: 09-04-01	DWG: G. MALECKI	CHK: S.Y.	APP: K.S.				

THIS DRAWING, THE PERTINENT ENCLOSURES, DESCRIPTIONS, CALCULATIONS ETC. AND THEIR CONTENTS ARE THE PROPERTY OF **DYWIDAG SYSTEMS INTERNATIONAL, USA, INC.** THEY ARE NOT ALLOWED TO BE DUPLICATED WITHOUT OUR PERMISSION. THEY ARE ALSO NOT TO BE SHOWN OR EXPLAINED FOR ANY REASON TO A THIRD PARTY OTHER THAN FOR REASONS EXPRESSLY INTENDED BY **DSI's** SUBMITTAL TO THE ORIGINAL RECEIVER. THEY HAVE TO BE RETURNED UPON REQUEST.

DYWIDAG-SYSTEMS INTERNATIONAL, USA, INC.
320 MARMON DRIVE - BOLINGBROOK, IL 60440
PHONE: 630-739-1100 FAX: 630-739-1405

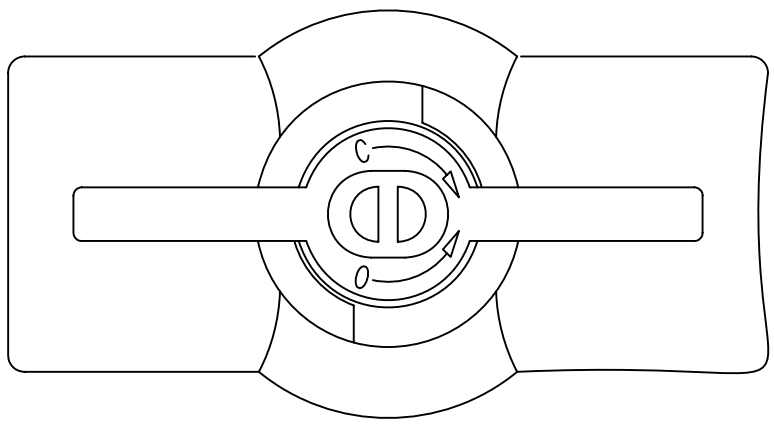

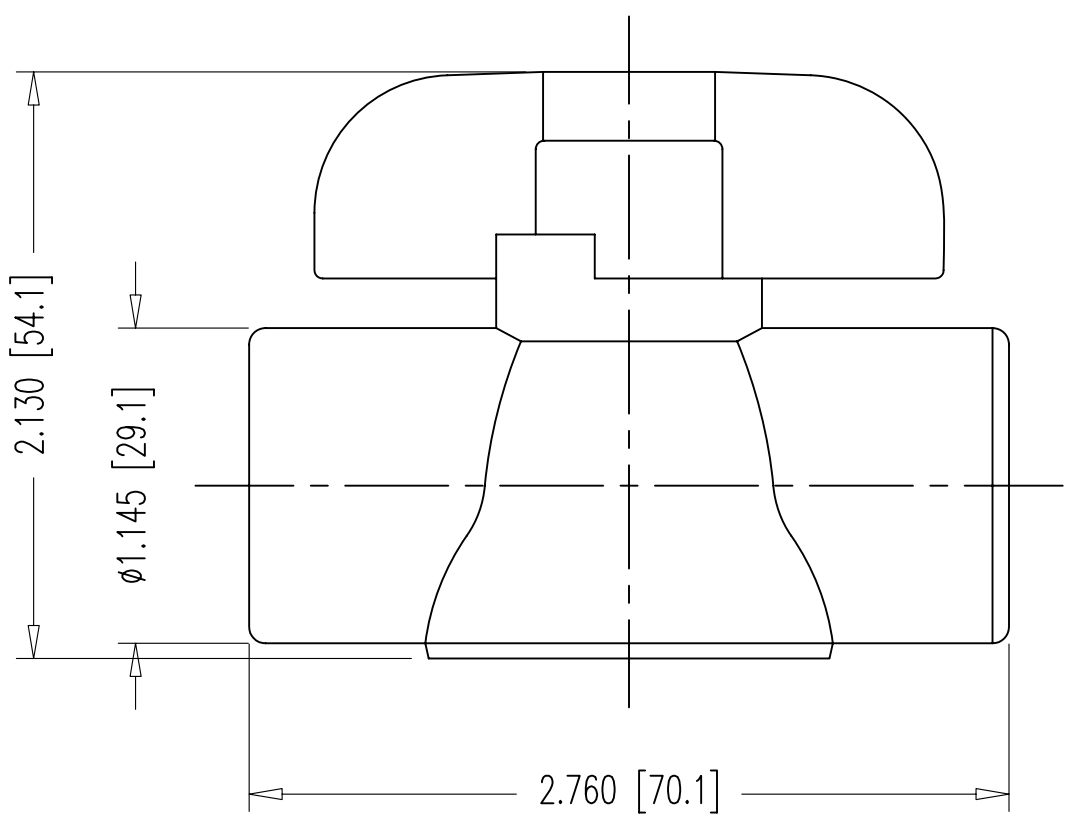

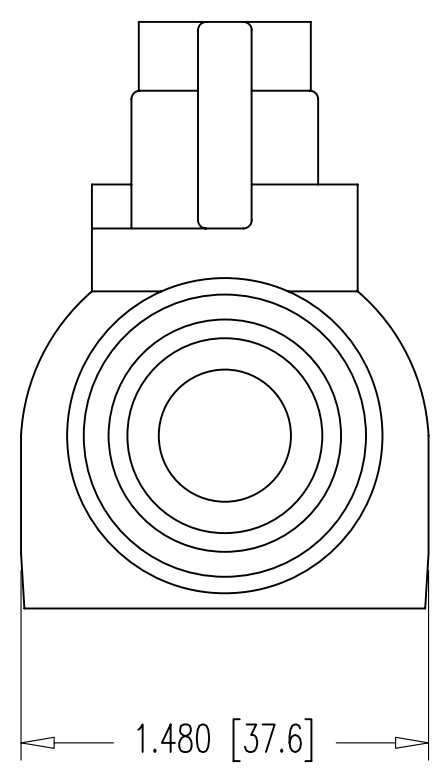

NOTE:
ALL DIMENSION MEASURED.
SPECIAL ORDER: NO STAMPED PART NUMBER.
SUPPLIER: KING BROTHERS
SUPPLIER PART NO. EBV-0500-T

APPROVED BY FDOT 09-14-07

DIMENSIONS: INCH [mm] mm FOR REFERENCE ONLY	QUALITY PLAN NUMBER:		WEIGHT 0.138 LBS.	REV.	DATE	NAME		PART NUMBER: **00 00 634**
1/2" NPT BALL VALVE		MATERIAL: PVC	SCALE 1:1					DRAWING NUMBER: **00 00 634**
DATE: 09-14-07	DWG: G. MALECKI	CHK: S.N.	APP: E.A.					

THIS DRAWING, THE PERTINENT ENCLOSURES, DESCRIPTIONS, CALCULATIONS ETC. AND THEIR CONTENTS ARE THE PROPERTY OF **DYWIDAG SYSTEMS INTERNATIONAL, USA, INC.** THEY ARE NOT ALLOWED TO BE DUPLICATED WITHOUT OUR PERMISSION. THEY ARE ALSO NOT TO BE SHOWN OR EXPLAINED FOR ANY REASON TO A THIRD PARTY OTHER THAN FOR REASONS EXPRESSLY INTENDED BY **DSI's** SUBMITTAL TO THE ORIGINAL RECEIVER. THEY HAVE TO BE RETURNED UPON REQUEST.

DYWIDAG-SYSTEMS INTERNATIONAL, USA, INC.
320 MARMON DRIVE - BOLINGBROOK, IL 60440
PHONE: 630-739-1100 FAX: 630-739-1405

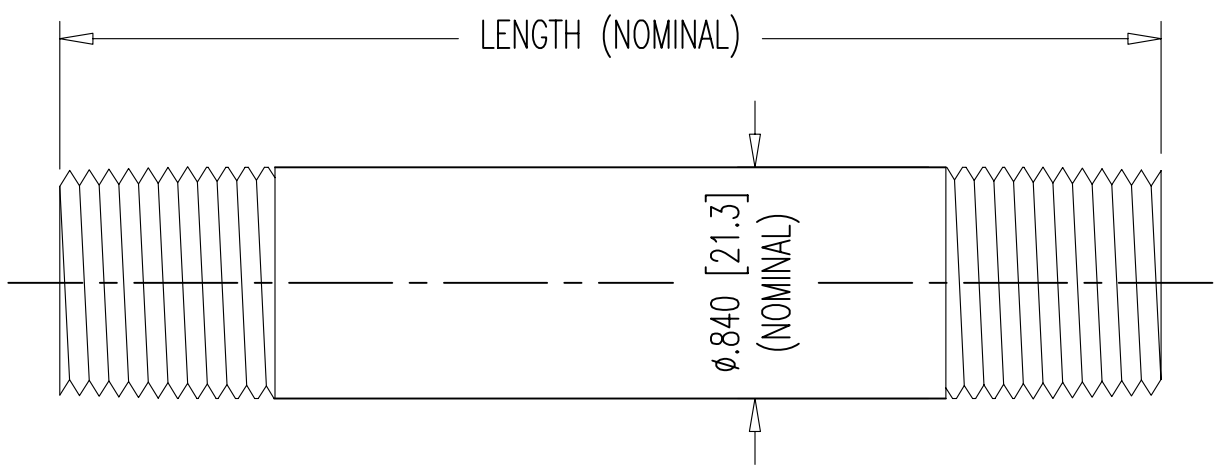

PART NUMBER	LENGTH	WEIGHT
00 00 672	4" [101.6mm]	0.28 LBS.
00 00 674	6" [152.4mm]	0.43 LBS.
00 00 676	12" [304.8mm]	0.85 LBS.

APPROVED BY FDOT 09-14-07

DIMENSIONS: INCH [mm]
mm FOR REFERENCE ONLY

QUALITY PLAN NUMBER:

1/2" PIPE NIPPLES

DATE: 09-14-07 | DWG: G. MALECKI | CHK: S.N. | APP: K.S.

THIS DRAWING, THE PERTINENT ENCLOSURES, DESCRIPTIONS, CALCULATIONS ETC. AND THEIR CONTENTS ARE THE PROPERTY OF **DYWIDAG SYSTEMS INTERNATIONAL, USA, INC.** THEY ARE NOT ALLOWED TO BE DUPLICATED WITHOUT OUR PERMISSION. THEY ARE ALSO NOT TO BE SHOWN OR EXPLAINED FOR ANY REASON TO A THIRD PARTY OTHER THAN FOR REASONS EXPRESSLY INTENDED BY **DSI's** SUBMITTAL TO THE ORIGINAL RECEIVER. THEY HAVE TO BE RETURNED UPON REQUEST.

MATERIAL:
SCH 40
BLACK WELDED
STEEL

SCALE
1:1

REV.	DATE	NAME	

PART NUMBER:
00 00 672
00 00 674
00 00 676

DRAWING NUMBER:
00 00 676

DYWIDAG-SYSTEMS INTERNATIONAL, USA, INC.
320 MARMON DRIVE - BOLINGBROOK, IL 60440
PHONE: 630-739-1100 FAX: 630-739-1405

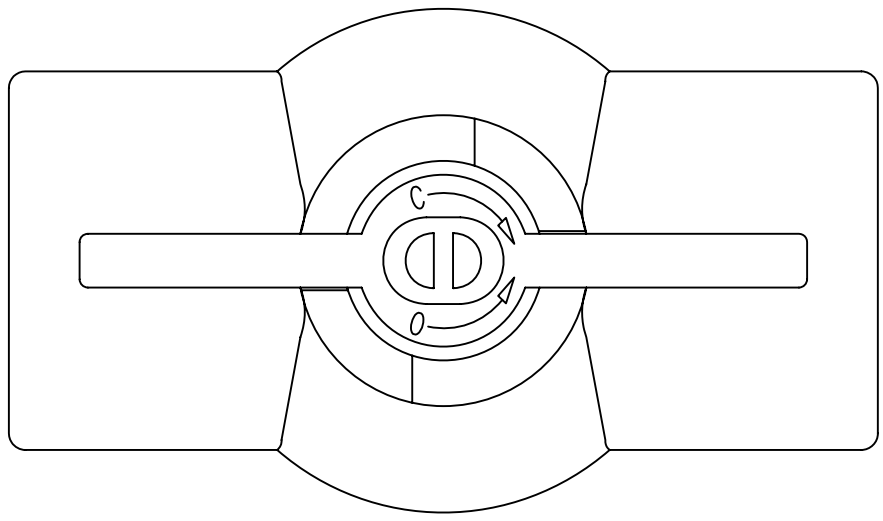

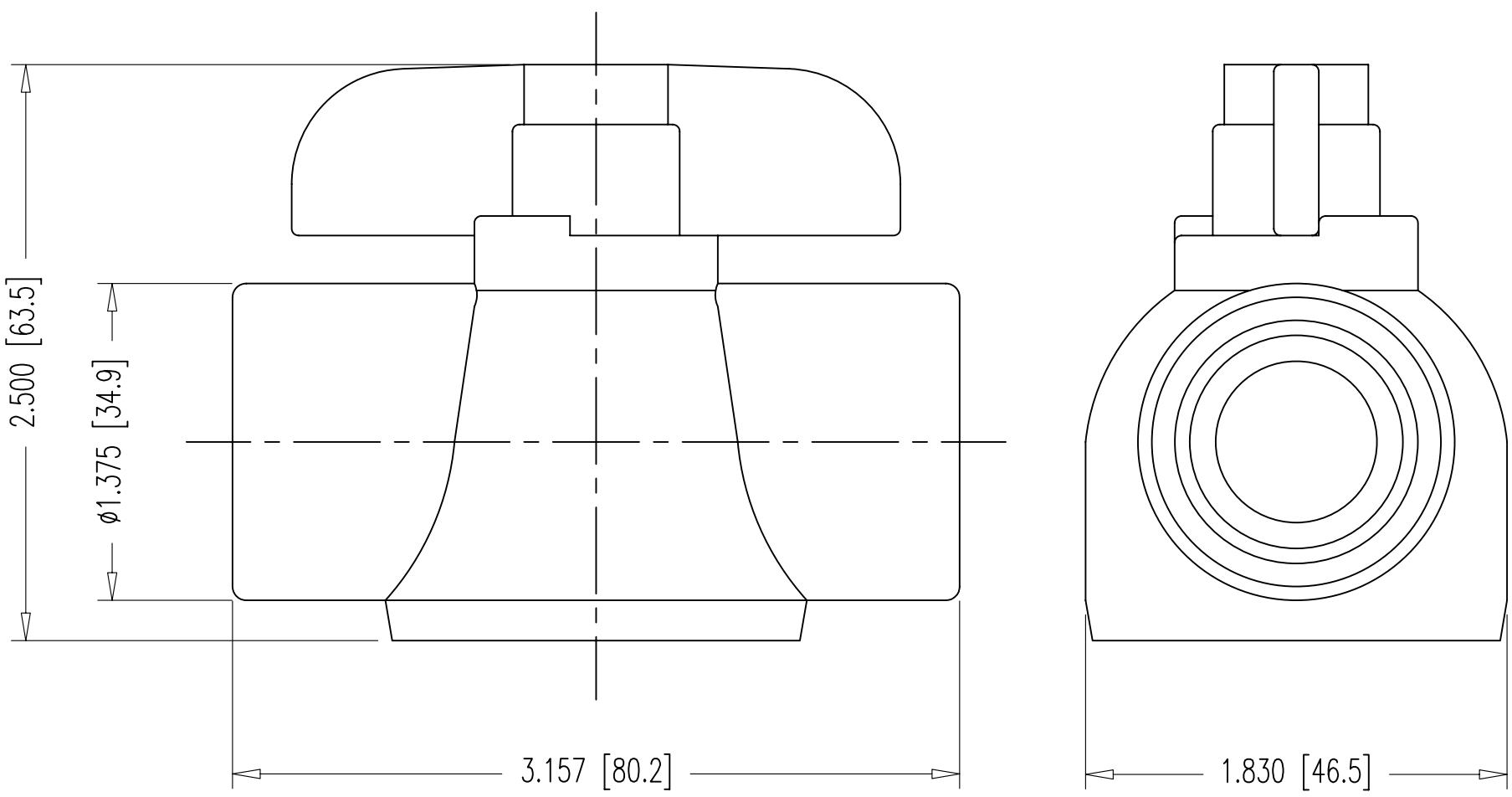

NOTE:
ALL DIMENSION MEASURED.

SUPPLIER: KING BROTHERS
SUPPLIER PART NO. EBV-0750-T

APPROVED BY FDOT 09-14-07

DIMENSIONS: INCH [mm] mm FOR REFERENCE ONLY	QUALITY PLAN NUMBER:		WEIGHT 0.213 LBS.	REV.	DATE	NAME	PART NUMBER: **00 00 834**
3/4" NPT BALL VALVE		MATERIAL: PVC	SCALE 1:1				DRAWING NUMBER: **00 00 834**
DATE: 09-14-07	DWG: G. MALECKI	CHK: S.N.	APP: E.A.				

THIS DRAWING, THE PERTINENT ENCLOSURES, DESCRIPTIONS, CALCULATIONS ETC. AND THEIR CONTENTS ARE THE PROPERTY OF **DYWIDAG SYSTEMS INTERNATIONAL, USA, INC.** THEY ARE NOT ALLOWED TO BE DUPLICATED WITHOUT OUR PERMISSION. THEY ARE ALSO NOT TO BE SHOWN OR EXPLAINED FOR ANY REASON TO A THIRD PARTY OTHER THAN FOR REASONS EXPRESSLY INTENDED BY **DSI's** SUBMITTAL TO THE ORIGINAL RECEIVER. THEY HAVE TO BE RETURNED UPON REQUEST.

DYWIDAG-SYSTEMS INTERNATIONAL, USA, INC.
320 MARMON DRIVE - BOLINGBROOK, IL 60440
PHONE: 630-739-1100 FAX: 630-739-1405

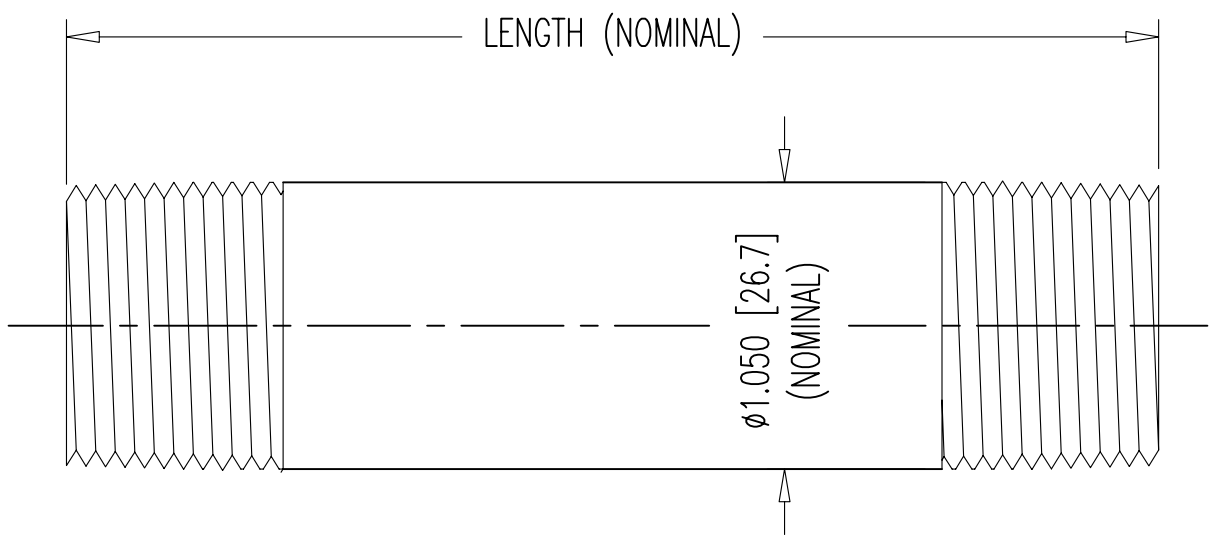

PART NUMBER	LENGTH	WEIGHT
00 00 872	4" [101.6mm]	0.38 LBS.
00 00 874	6" [152.4mm]	0.57 LBS.
00 00 876	12" [304.8mm]	1.13 LBS.

APPROVED BY FDOT 09-14-07

DIMENSIONS: INCH [mm]
mm FOR REFERENCE ONLY

QUALITY PLAN NUMBER:

3/4" PIPE NIPPLES

DATE: 09-14-07 | DWG: G. MALECKI | CHK: S.N. | APP: K.S.

THIS DRAWING, THE PERTINENT ENCLOSURES, DESCRIPTIONS, CALCULATIONS ETC. AND THEIR CONTENTS ARE THE PROPERTY OF **DYWIDAG SYSTEMS INTERNATIONAL, USA, INC.** THEY ARE NOT ALLOWED TO BE DUPLICATED WITHOUT OUR PERMISSION. THEY ARE ALSO NOT TO BE SHOWN OR EXPLAINED FOR ANY REASON TO A THIRD PARTY OTHER THAN FOR REASONS EXPRESSLY INTENDED BY **DSI's** SUBMITTAL TO THE ORIGINAL RECEIVER. THEY HAVE TO BE RETURNED UPON REQUEST.

MATERIAL:
SCH 40
BLACK WELDED
STEEL

SCALE
1:1

REV.	DATE	NAME	

PART NUMBER:
00 00 872
00 00 874
00 00 876

DRAWING NUMBER:
00 00 876

DYWIDAG-SYSTEMS INTERNATIONAL, USA, INC.
320 MARMON DRIVE - BOLINGBROOK, IL 60440
PHONE: 630-739-1100 FAX: 630-739-1405

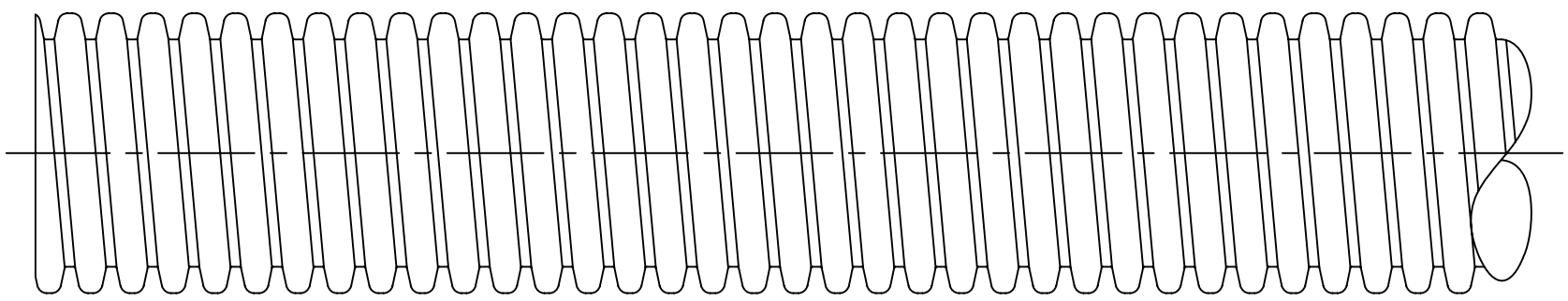

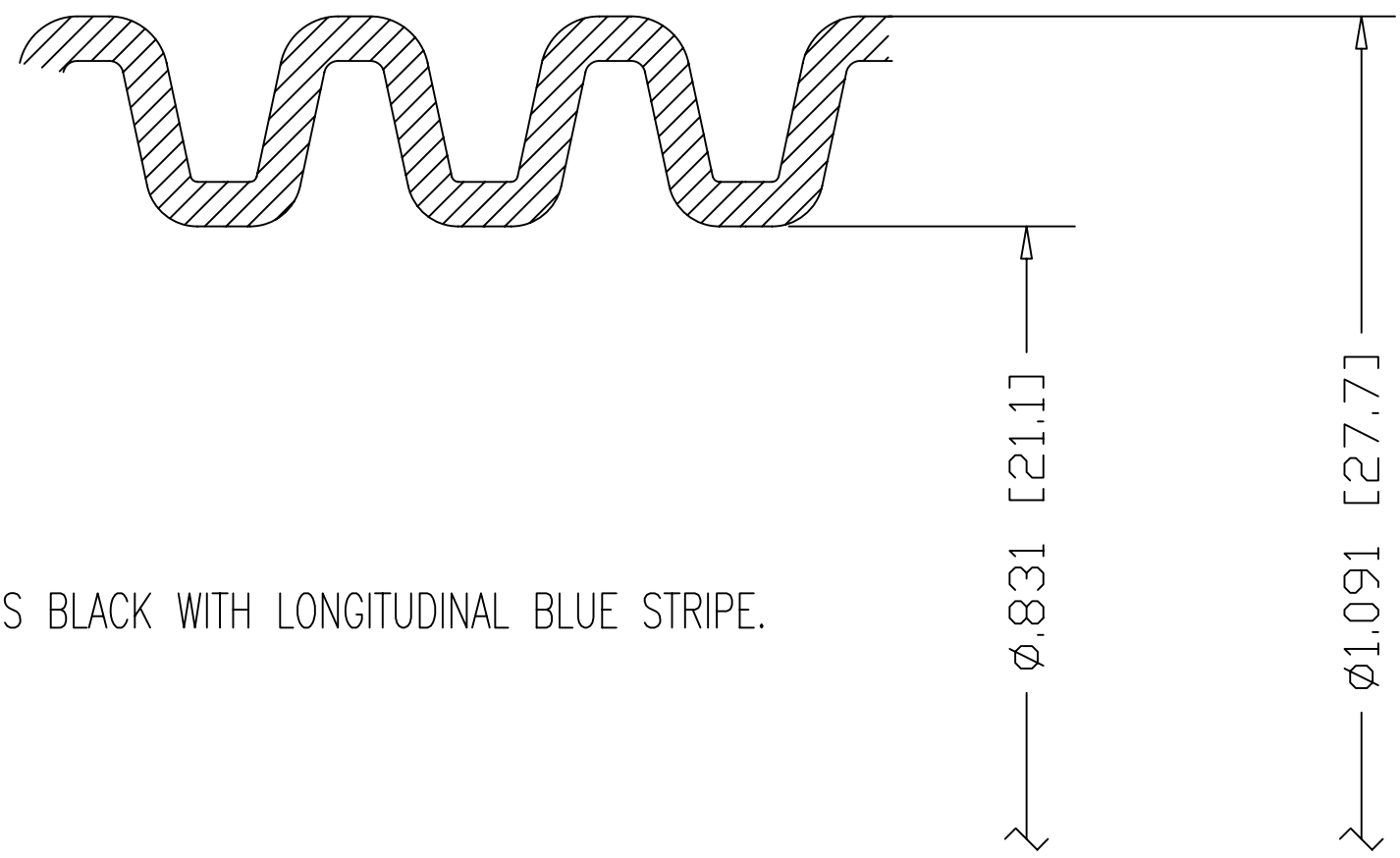

NOTES:
1. GROUT TUBE IS BLACK WITH LONGITUDINAL BLUE STRIPE.

MANUFACTURER: DSI
MANUFACTURER'S PART NUMBER: 00 00 801

APPROVED BY FDOT 09-14-07

DIMENSIONS: INCH [mm] IN. FOR REFERENCE ONLY	QUALITY PLAN NUMBER:	TOLERANCES: ±.020 UNLESS NOTED		REV.	DATE	NAME		PART NUMBER: **00 00 801**
21mm GROUT TUBE, STANDARD DUTY		MATERIAL: HDPE MEETING OIT REQUIREMENTS	SCALE 1:1 6:1					DRAWING NUMBER: **00 00 801**
DATE: 09-14-07	DWG: G. MALECKI	CHK: S.Y.	APP: K.S.					

THIS DRAWING, THE PERTINENT ENCLOSURES, DESCRIPTIONS, CALCULATIONS ETC. AND THEIR CONTENTS ARE THE PROPERTY OF **DYWIDAG SYSTEMS INTERNATIONAL, USA, INC.** THEY ARE NOT ALLOWED TO BE DUPLICATED WITHOUT OUR PERMISSION. THEY ARE ALSO NOT TO BE SHOWN OR EXPLAINED FOR ANY REASON TO A THIRD PARTY OTHER THAN FOR REASONS EXPRESSLY INTENDED BY **DSI's** SUBMITTAL TO THE ORIGINAL RECEIVER. THEY HAVE TO BE RETURNED UPON REQUEST.

DYWIDAG-SYSTEMS INTERNATIONAL, USA, INC.
320 MARMON DRIVE - BOLINGBROOK, IL 60440
PHONE: 630-739-1100 FAX: 630-739-1405

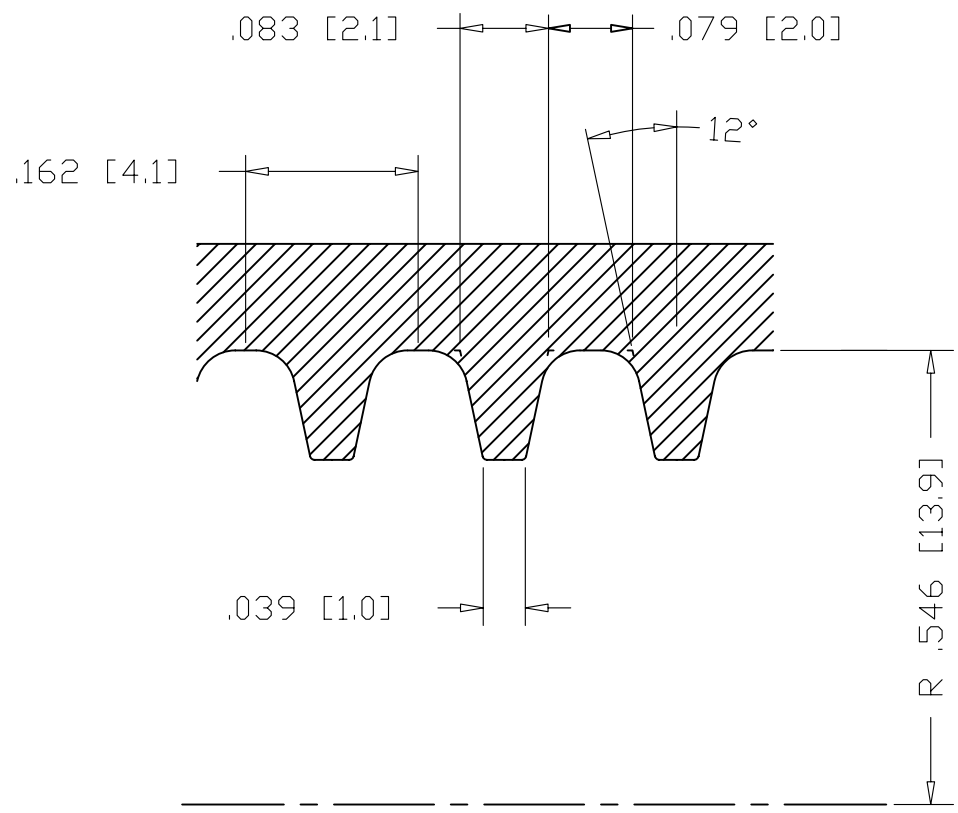

20% GLASS FILLED NYLON
WITH A CELL CLASS S-PA 0141,
S-PA 0231 OR S-PA 0401
COLOR: BLACK

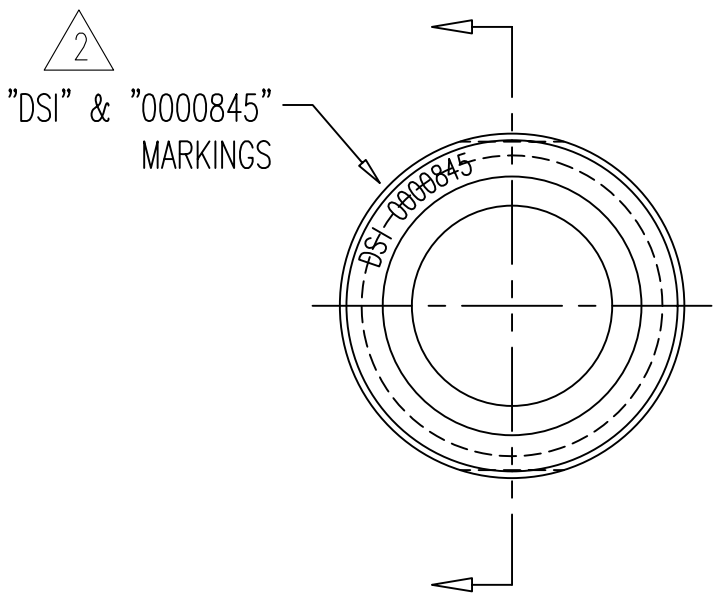

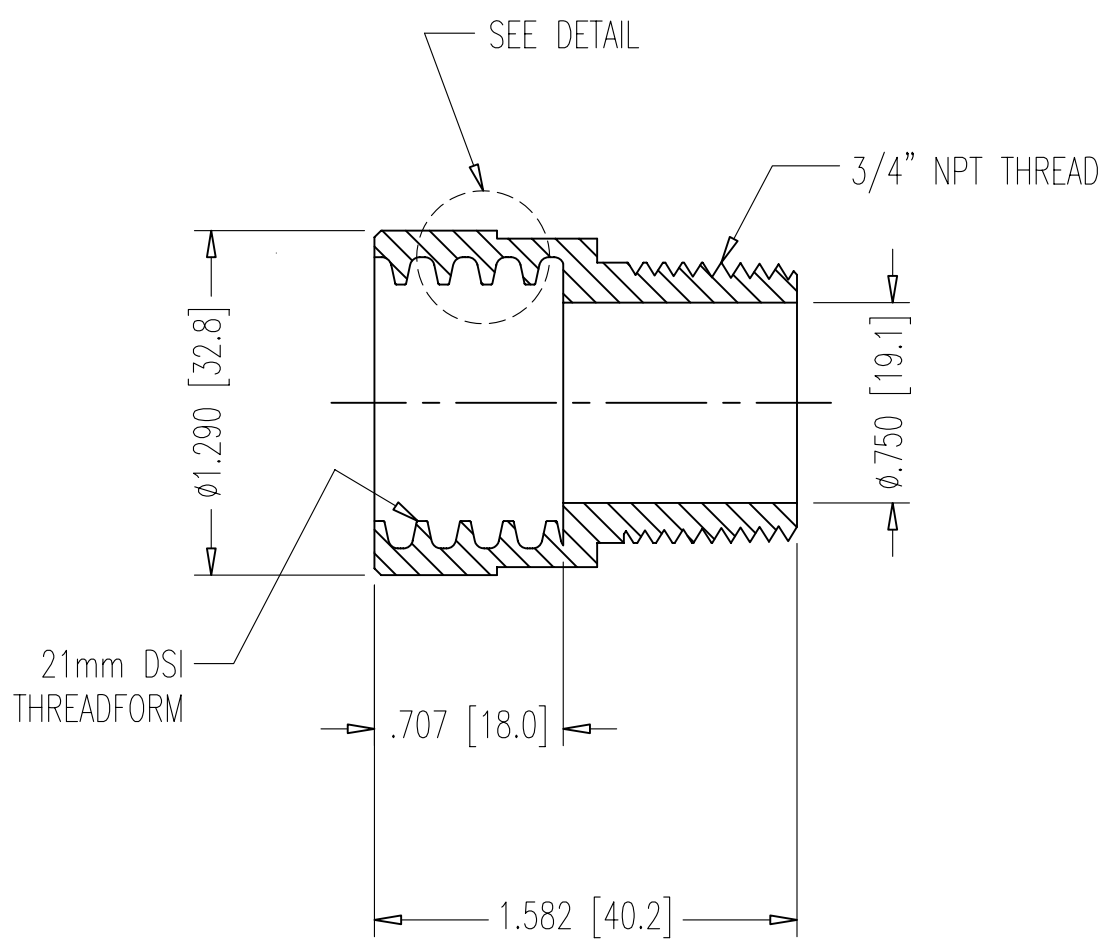

NOTE:
3 PART FOR USE WITH 21mm GROUT TUBES
00 00 801 OR 00 00 802.

2 MANUFACTURER: DSI
MANUFACTURER'S PART NUMBER: 00 00 845

APPROVED BY FDOT 09-14-07

DIMENSIONS: INCH [mm] mm FOR REFERENCE ONLY	QUALITY PLAN NUMBER: Q000000020P	TOLERANCES: ±.020 UNLESS NOTED	WEIGHT 0.06 LBS.	REV.	DATE	NAME		PART NUMBER: **00 00 845**
21mm FEMALE-3/4" NPT MALE CONNECTOR				1	12-18-06	S.N.		
				2	05-09-07	S.N.		
		MATERIAL: SEE ABOVE	SCALE 1:1 4:1	3	12-05-07	S.Y.		
DATE: 09-14-07	DWG: G. MALECKI	CHK: E.A.	APP: K.S.					DRAWING NUMBER: **00 00 845**

THIS DRAWING, THE PERTINENT ENCLOSURES, DESCRIPTIONS, CALCULATIONS ETC. AND THEIR CONTENTS ARE THE PROPERTY OF **DYWIDAG SYSTEMS INTERNATIONAL, USA, INC.** THEY ARE NOT ALLOWED TO BE DUPLICATED WITHOUT OUR PERMISSION. THEY ARE ALSO NOT TO BE SHOWN OR EXPLAINED FOR ANY REASON TO A THIRD PARTY OTHER THAN FOR REASONS EXPRESSLY INTENDED BY **DSI's** SUBMITTAL TO THE ORIGINAL RECEIVER. THEY HAVE TO BE RETURNED UPON REQUEST.

DYWIDAG-SYSTEMS INTERNATIONAL, USA, INC.
320 MARMON DRIVE - BOLINGBROOK, IL 60440
PHONE: 630-739-1100 FAX: 630-739-1405

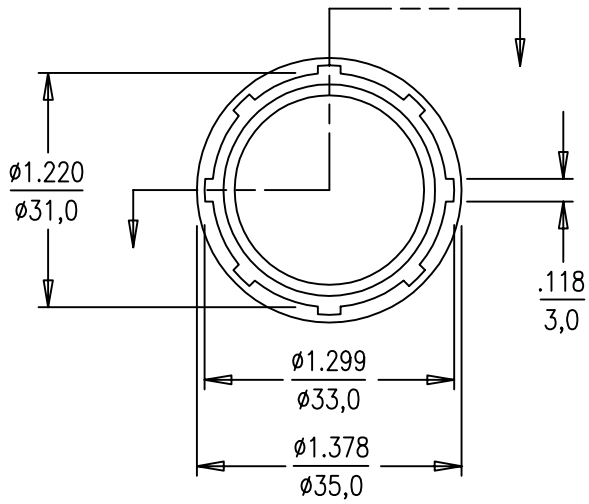

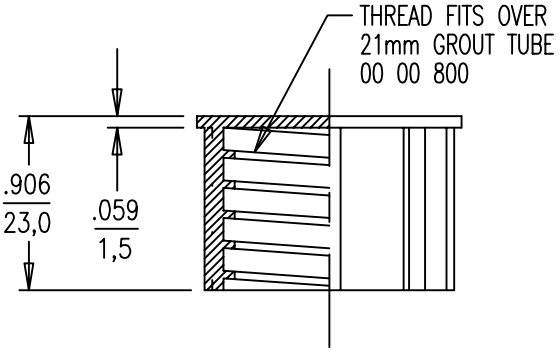

APPROVED BY FDOT 9-22-08

DYWIDAG POST-TENSIONING SYSTEMS	DIMENSIONS:INCH/mm mm FOR REFERENCE ONLY		REV.	DATE	NAME	PART NUMBER 00 00 841
21mm GROUT TUBE CAP	TOLERANCES: ±.020 UNLESS NOTED	WEIGHT				
DATE: 10-19-94 DRAWN: G. MALECKI APPROVED:	MATERIAL: H.D.P.E.	SCALE 1:1				DRAWING NUMBER 00 00 841
This drawing, the pertinent enclossures, descriptions, calculations etc. and their contents are the property of DYWIDAG SYSTEMS INTERNATIONAL, USA, INC. They are not allowed to be duplicated without our permission. They are also not to be shown or explained for any reason to a third party other than for reasons expressly intended by the original receiver. They have to be returned on request.	DYWIDAG SYSTEMS INTERNATIONAL, USA, INC. DSI					

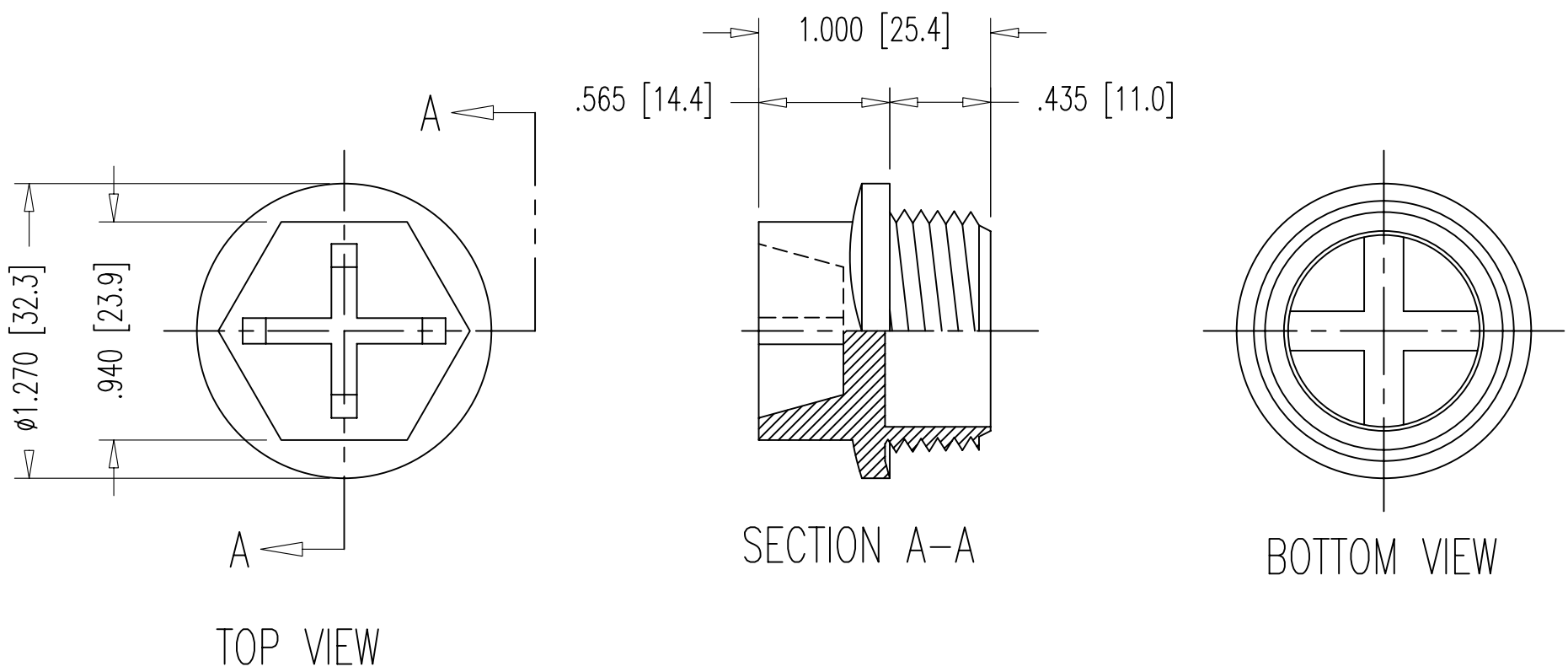

NOTE:
ALL DIMENSIONS MEASURED.
SPECIAL ORDER: NO STAMPED PART NUMBER.

SUPPLIER:
NIAGARA PLASTICS
SUPPLIER PART # : BT 0750

APPROVED BY FDOT 05-31-07

DIMENSIONS: INCH [mm] mm FOR REFERENCE ONLY	QUALITY PLAN NUMBER: Q000000040P	TOLERANCES: ±.010 UNLESS NOTED	WEIGHT LBS.	REV.	DATE	NAME		PART NUMBER: **00 00 847**
BT 0750 (3/4") NPT NYLON PLUG		MATERIAL: NYLON 6 COLOR: BLACK	SCALE 1:1					
DATE: 05-31-07	DWG: G. MALECKI	CHK: S.Y.	APP: K.S.					DRAWING NUMBER: **00 00 847**

THIS DRAWING, THE PERTINENT ENCLOSURES, DESCRIPTIONS, CALCULATIONS ETC. AND THEIR CONTENTS ARE THE PROPERTY OF **DYWIDAG SYSTEMS INTERNATIONAL, USA, INC.** THEY ARE NOT ALLOWED TO BE DUPLICATED WITHOUT OUR PERMISSION. THEY ARE ALSO NOT TO BE SHOWN OR EXPLAINED FOR ANY REASON TO A THIRD PARTY OTHER THAN FOR REASONS EXPRESSLY INTENDED BY **DSI's** SUBMITTAL TO THE ORIGINAL RECEIVER. THEY HAVE TO BE RETURNED UPON REQUEST.

DYWIDAG-SYSTEMS INTERNATIONAL, USA, INC.
320 MARMON DRIVE - BOLINGBROOK, IL 60440
PHONE: 630-739-1100 FAX: 630-739-1405

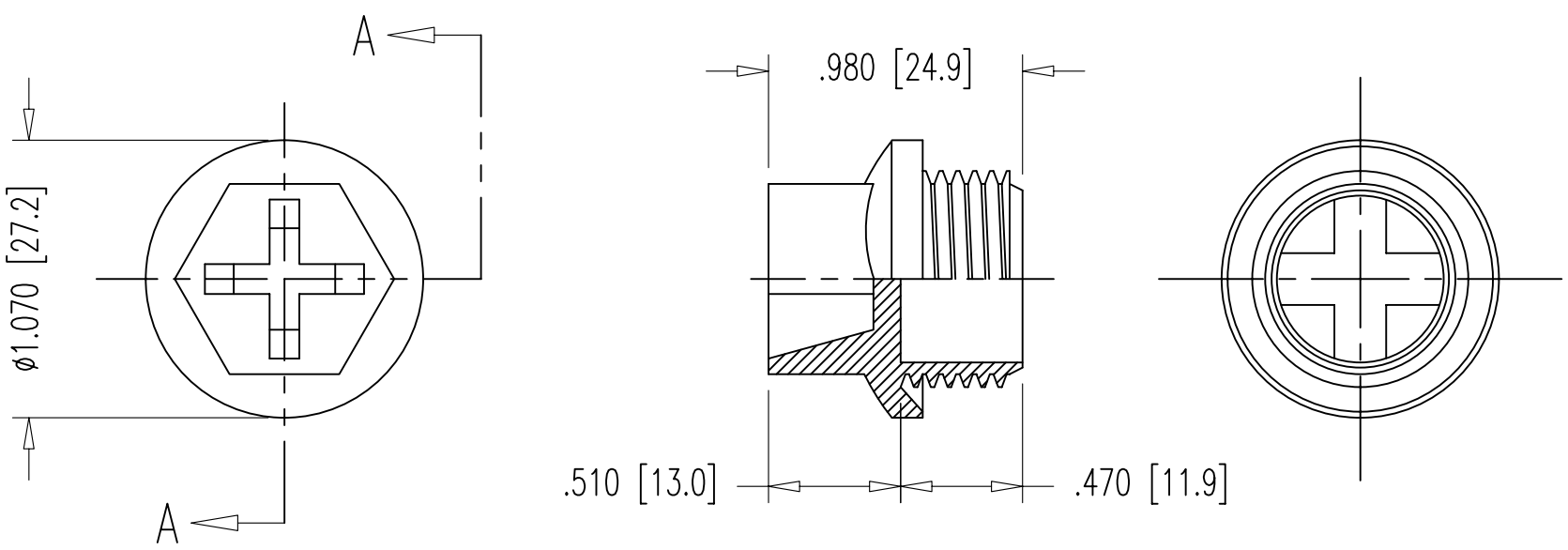

TOP VIEW SECTION A–A BOTTOM VIEW

NOTE:
ALL DIMENSIONS FROM NIAGARA PLASTICS TABLE.
SPECIAL ORDER: NO STAMPED PART NUMBER.

SUPPLIER:
NIAGARA PLASTICS
SUPPLIER PART # : BT 0500

APPROVED BY FDOT 12-12-07

DIMENSIONS: INCH [mm] mm FOR REFERENCE ONLY	QUALITY PLAN NUMBER: Q000000040P	TOLERANCES: ±.020 UNLESS NOTED	WEIGHT 0.019 LBS.	REV.	DATE	NAME		PART NUMBER: 00 00 647
BT 0500 (1/2") NYLON PLUG		MATERIAL: NYLON 6 COLOR: YELLOW	SCALE 1:1					DRAWING NUMBER: 00 00 647
DATE: 01-17-07	DWG: G. MALECKI	CHK: S.Y.	APP: K.S.					

THIS DRAWING, THE PERTINENT ENCLOSURES, DESCRIPTIONS, CALCULATIONS ETC. AND THEIR CONTENTS ARE THE PROPERTY OF **DYWIDAG SYSTEMS INTERNATIONAL, USA, INC.** THEY ARE NOT ALLOWED TO BE DUPLICATED WITHOUT OUR PERMISSION. THEY ARE ALSO NOT TO BE SHOWN OR EXPLAINED FOR ANY REASON TO A THIRD PARTY OTHER THAN FOR REASONS EXPRESSLY INTENDED BY **DSI's** SUBMITTAL TO THE ORIGINAL RECEIVER. THEY HAVE TO BE RETURNED UPON REQUEST.

DYWIDAG-SYSTEMS INTERNATIONAL, USA, INC.
320 MARMON DRIVE - BOLINGBROOK, IL 60440
PHONE: 630-739-1100 FAX: 630-739-1405

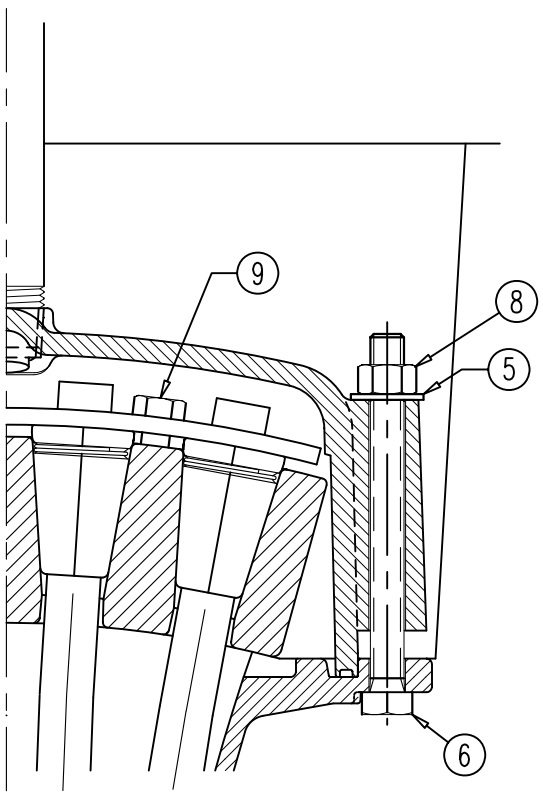

KEEPER PLATE 68 04 2637 ON WEDGE PLATE 68 04 2534A & GROUT CAP 68 04 2539 ON 2 FLAT ANCHOR 68 04 2531

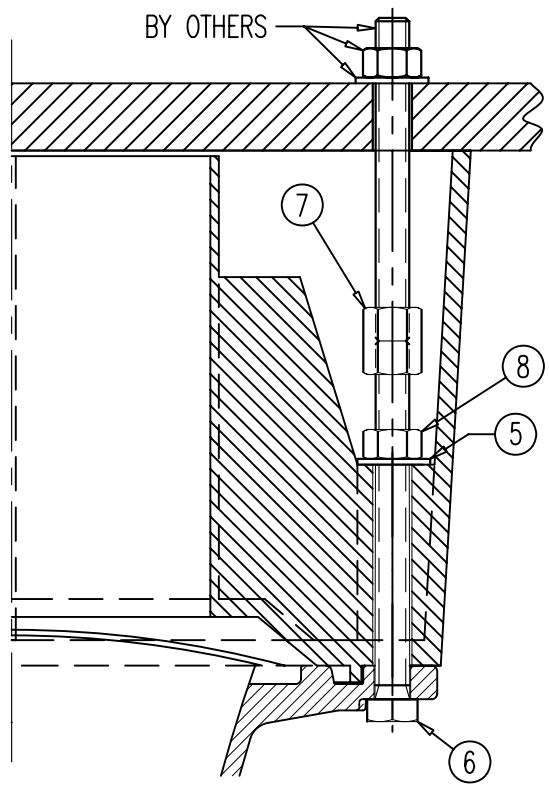

POCKET FORMER 68 04 2640 ON FLAT ANCHOR 68 04 2531

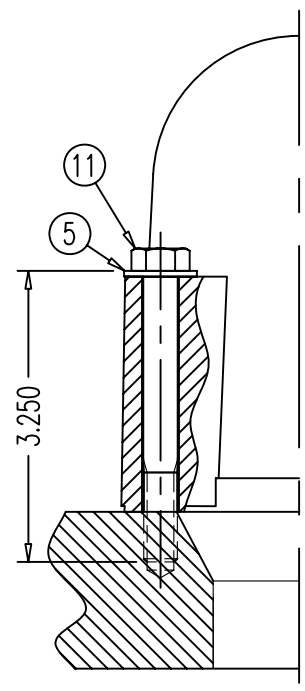

BAR GROUT CAP B36E50700 & B65E50700

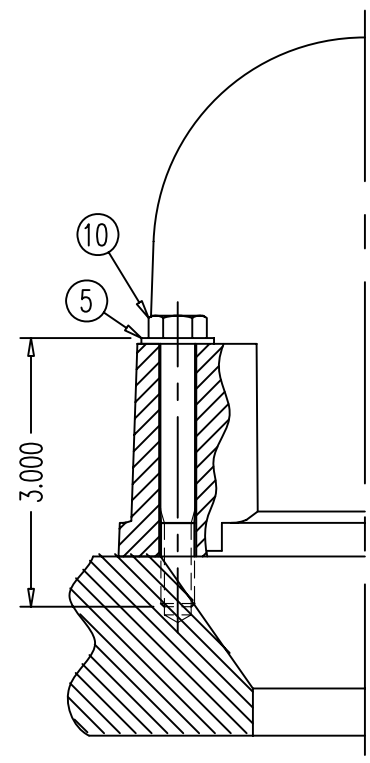

BAR GROUT CAP B46E50700

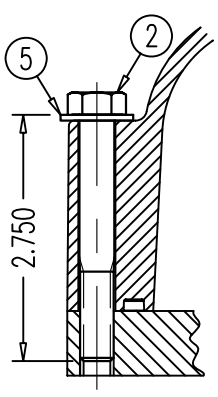

GROUT CAP 68 07 7230 ON MPA 68 07 216

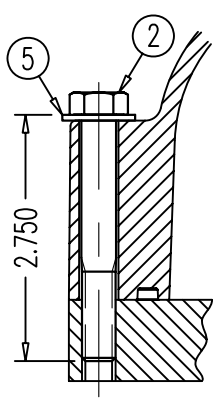

GROUT CAP68 12 7230 ON MPA 68 12 216

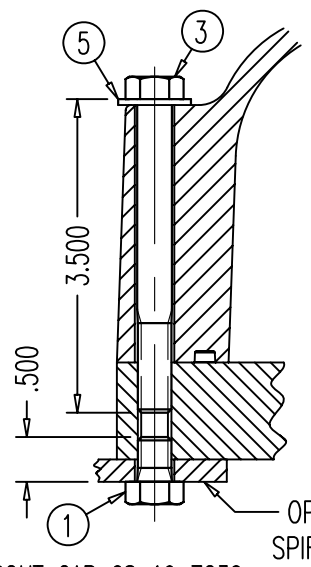

GROUT CAP 68 19 7230 ON MPA 68 19 216

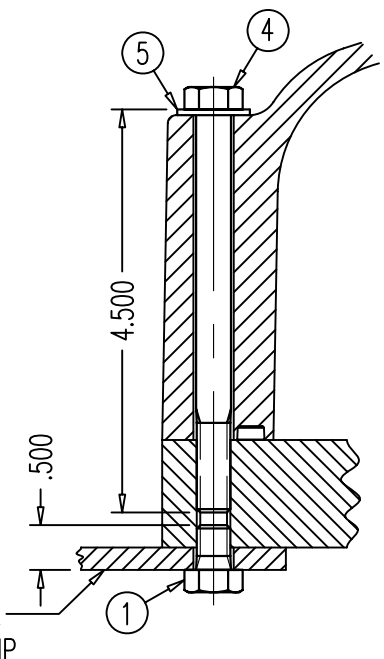

GROUT CAP 68 27 7230 ON MPA 68 27 216

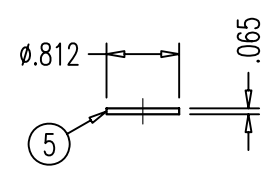

TYPE A NARROW WASHER FOR 3/8"-UNC BOLT

POS.	PART NUMBER	DISCRIPTION (ALL PARTS 316L STAINLESS STEEL UNLESS NOTED)
1	00 00 770	3/8"-16UNC HEX BOLT, 1/2" LONG, ZINC PLATED
2	00 00 771	3/8"-16UNC HEX BOLT, 2-3/4" LONG (1" LONG THREAD)
3	00 00 772	3/8"-16UNC HEX BOLT, 3-1/2" LONG (1" LONG THREAD)
4	00 00 773	3/8"-16UNC HEX BOLT, 4-1/2" LONG (1" LONG THREAD)
5	00 00 774	TYPE A NARROW WASHER FOR 3/8"-UNC BOLT
6	00 00 775	3/8"-16UNC HEX BOLT, 4" LONG (FULL THREAD)
7	00 00 776	3/8"-16UNC COUPLER, ZINC COATED
8	00 00 777	3/8"-16UNC HEX NUT
9	00 00 778	5/16"-18UNC HEX BOLT, 7/8" LONG, ZINC PLATED
10	00 00 782	3/8"-16UNC HEX BOLT, 3" LONG (1" LONG THREAD)
11	00 00 783	3/8"-16UNC HEX BOLT, 3-1/4" LONG (1" LONG THREAD)

NOTE:
THE 316L S.S. BOLTS ARE SPECIAL ORDER.
ALL WASHERS, HEX NUTS & COUPLERS HAVE NO MARKINGS.

APPROVED BY FDOT 09-14-07

DIMENSIONS: INCH

QUALITY PLAN NUMBER:

STAINLESS STEEL 316L BOLTS AND WASHER FOR PLASTIC GROUT CAPS

DATE: 09-14-07 | DWG: G. MALECKI | CHK: E.A. | APP: K.S.

THIS DRAWING, THE PERTINENT ENCLOSURES, DESCRIPTIONS, CALCULATIONS ETC. AND THEIR CONTENTS ARE THE PROPERTY OF **DYWIDAG SYSTEMS INTERNATIONAL, USA, INC.** THEY ARE NOT ALLOWED TO BE DUPLICATED WITHOUT OUR PERMISSION. THEY ARE ALSO NOT TO BE SHOWN OR EXPLAINED FOR ANY REASON TO A THIRD PARTY OTHER THAN FOR REASONS EXPRESSLY INTENDED BY **DSI's** SUBMITTAL TO THE ORIGINAL RECEIVER. THEY HAVE TO BE RETURNED UPON REQUEST.

SCALE 1:3

REV.	DATE	NAME	

PART NUMBERS:
00 00 770, 00 00 771, 00 00 772, 00 00 773, 00 00 774, 00 00 775, 00 00 776, 00 00 777, 00 00 778, 00 00 782, 00 00 783

DRAWING NUMBER: **00 00 770**

DYWIDAG-SYSTEMS INTERNATIONAL, USA, INC.
POST TENSIONING / REINFORCING UNIT PHONE: 630-739-1100
320 MARMON DRIVE - BOLINGBROOK, IL FAX: 630-739-1405

HEAT SHRINK SLEEVES - PLA TYPE UNO

		23 mm x 38 mm DUCT	21 mm x 72 mm DUCT	25 mm x 76 mm DUCT	23 mm DUCT	59 mm DUCT	76 mm DUCT	85 mm DUCT	100 mm DUCT	115 mm DUCT	130 mm DUCT
TENDON SIZE		1 x 0.6"	3 x 0.6"	4 x 0.6"	1 x 0.6"	7 x 0.6" 1 3/8"	9 x 0.6" 1 3/4"	12 x 0.6" 1 3/4"	15, 19 x 0.6"	27 x 0.6"	37 x 0.6"
DUCT	ID	0.90" [23 mm] x 1.50" [38 mm]	0.827" [21 mm] x 2.835" [72 mm]	0.984" [25 mm] x 2.992" [76 mm]	Ø 0.94" [23.879 mm]	Ø 2.323" [59 mm]	Ø 2.99" [75.9 mm]	Ø 3.346" [85.0 mm]	Ø 3.937" [100 mm]	Ø 4.528" [115.0 mm]	Ø 5.039" [128.0 mm]
DUCT	OD_1	1.45" [37] x 2.05" [52 mm]	1.378" [35] x 3.386" [86 mm]	1.554" [39.5 mm] x 3.551" [90.2 mm]	Ø 1.48" [37.6 mm]	Ø 2.874" [73 mm]	Ø 3.58" [90.9 mm]	Ø 3.946" [100.2 mm]	Ø 4.573" [116.2 mm]	Ø 5.303" [134.7 mm]	Ø 5.96" [151.0 mm]
DUCT	OD_2		0.984" [25] x 2.992" [76 mm]	1.142" [29 mm] x 3.15" [80 mm]	Ø 1.06" [26.9 mm]	Ø 2.480" [63 mm]	Ø 3.35" [85.1 mm]	Ø 3.546" [90.1 mm]	Ø 4.173" [106.0 mm]	Ø 4.803" [122.0 mm]	Ø 5.36" [136.0 mm]
GTI COUPLER Max. OD		1.63" [41 mm] x 2.23" [57 mm]	1.565" [39.8 mm] x 3.565" [90.55 mm]	1.714" [43.54 mm] x 3.674" [93.32 mm]	Ø 1.7" [43.2 mm]	Ø 3.031" [77 mm]	Ø 3.738" [94.9 mm]	Ø 4.134" [105 mm]	Ø 4.698" [119.3 mm]	Ø 5.599" [142.2 mm]	Ø 6.151" [156.2 mm]
ORDER PART #	OPTION A	N/A	**PLA-55-112-YE**	**PLA-55-112-YE**	N/A	**PLA-55-112-YE**	N/A	N/A	N/A	N/A	N/A
ORDER PART #	OPTION B	N/A	**PLA-55-225-YE**	**PLA-55-225-YE**	N/A	**PLA-55-225-YE**	**PLA-90-225-YE**	N/A	N/A	N/A	N/A
DSI COUPLER Max. OD		N/A	N/A	N/A	N/A	Ø 3.701" [94 mm]	N/A	Ø 4.824" [122.5 mm]	Ø 5.5" [139.7 mm]	Ø 6.278" [159.5 mm]	N/A
ORDER PART #	OPTION A	N/A	N/A	N/A	N/A	**PLA-55-150-YE**	N/A	**PLA-90-150-YE**	**PLA-100-150-BK**	**PLA-125-150-YE**	N/A
ORDER PART #	OPTION B	N/A	N/A	N/A	N/A	**PLA-55-450-YE**	N/A	**PLA-90-450-YE**	**PLA-100-450-BK**	**PLA-125-450-YE**	N/A
COLOR		YE	YE	YE	BK	YE	YE	YE	BK	YE	BK
SLEEVE SIZE		**PMA-90/30**	**55**	**55**	**PMA-70/25**	**55**	**90**	**90**	**100**	**125**	**160**

DIMENSIONS & ORDERING INFO

P L A - XXX - YYY - ZZ

	STANDARD ORDERING OPTIONS
COLOR ▶	YE - YELLOW, BK - BLACK
SLEEVE WIDTH ▶	300mm, 450mm, 600mm, 900mm (12", 18", 24",36")
SLEEVE SIZE ▶	55mm -315mm (2" - 12")
ADHESIVE (thickness as supplied) ▶	A - 0.75 mm (30 mils)
BACKING (thickness as supplied) ▶	L - 0.80 mm (31 mils)
CONFIGURATION ▶	P - Tubular

*PMA - HIGH SHRINK SLEEVE.
- SPCCS. SAME AS PLA.
- EXPENSIVE THAN PLA (NEEDS LONGER LEAD TIME).
- HIGH SHRINK TUBULAR BACKING.

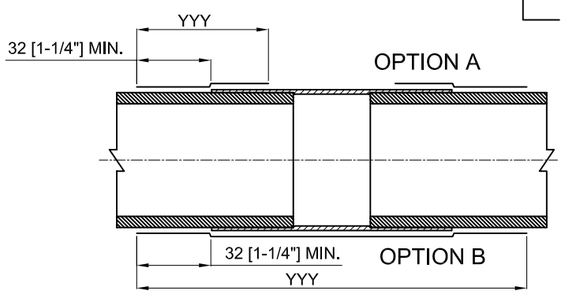

MATERIAL:

ACCORDING TO FDOT SPECIFICATION
POST TENSIONING, SECTION 462 - 4, 2, 6, 3.

NOTES:
1. ORDER DIRECT FROM CANUSA
   TEL. 281 367 - 8866
   FAX. 281 367 - 4304
2. ABOVE TABLE APPLIES TO INTERNAL USE ONLY.
3. SELECT ORDER LENGTH AS A MULTIPLE OF THE ACTUAL LENGTH. SEE OPTION A OR B.
4. *NO CONNECTION DETAILS DEVELOPED.
5. OTHER COLORS SLEEVE MAY BE AVAILABLE UPON REQUEST.
6. OD_1 IS MAX. OD W/ RIBS AND OD_2 IS MAX. OD W/O RIBS
7. N/A MEANS NOT AVAILABLE OR NOT ASSIGNED YET.
8. ALWAYS HEAT THE DUCT ENDS FIRST.

TUBULAR SLEEVE	TUBULAR SLEEVE DIAMETER AS SUPPLIED	TUBULAR SLEEVE DIAMETER FULLY RECOVERED
PLA 55-YYY ZZ	3.5" [90mm]	2.3" [55mm]
PLA 63-YYY ZZ	3.5" [90mm]	2.5" [63mm]
PLA 90-YYY ZZ	4.8" [120mm]	3.3" [81mm]
PLA 100-YYY ZZ	5" [130mm]	3.5" [90mm]
PLA 115-YYY ZZ	5.5" [145mm]	3.8" [98mm]
PLA 125-YYY ZZ	6.3" [160mm]	4.3" [110mm]
PLA 160-YYY ZZ	7.5" [190mm]	5.2" [130mm]
PLA 170-YYY ZZ	8" [205mm]	5.5" [140mm]
PLA 230-YYY ZZ	10" [260mm]	7" [180mm]
PLA 280-YYY ZZ	12.3" [315mm]	8.3" [211mm]
PLA 315-YYY ZZ	14" [360mm]	9.5" [245mm]
PMA 90/30	3.5" [90mm]	1.2" [30mm]
PMA 70/25	2.8" [70mm]	1.0" [25mm]

APPROVED BY FDOT 05-31-07

DIMENSIONS: INCH [mm]
mm FOR REFERENCE ONLY

HEAT SHRINK SLEEVE SIZES FOR INTERNAL APPLICATIONS

DATE: 05-31-07 | DWG: I. TIRA | CHK: E.A. | APP: K.S.

THIS DRAWING, THE PERTINENT ENCLOSURES, DESCRIPTIONS, CALCULATIONS ETC. AND THEIR CONTENTS ARE THE PROPERTY OF **DYWIDAG SYSTEMS INTERNATIONAL, USA, INC.** THEY ARE NOT ALLOWED TO BE DUPLICATED WITHOUT OUR PERMISSION. THEY ARE ALSO NOT TO BE SHOWN OR EXPLAINED FOR ANY REASON TO A THIRD PARTY OTHER THAN FOR REASONS EXPRESSLY INTENDED BY **DSI's** SUBMITTAL TO THE ORIGINAL RECEIVER. THEY HAVE TO BE RETURNED UPON REQUEST.

SCALE NTS

REV.	DATE	NAME

PART NUMBERS:
SEE TABLE ABOVE

DRAWING NUMBER:
PLA-0-0-0

DYWIDAG-SYSTEMS INTERNATIONAL, USA, INC.
320 MARMON DRIVE - BOLINGBROOK, IL 60440
PHONE: 630-739-1100 FAX: 630-739-1405

DSI

POST-TENSIONING BARS

SYSTEM 100

1-3/8” PT Bar System

Square & Rectangular Bearing Plate Design
Sample Calculations

Per AASHTO LRFD

SAMPLE ANCHOR PLATE DESIGN FOR 1-3/8" GR 150 BAR

SQUARE BEARING PLATE

Assumptions:

Concrete strength at stressing f'ci = 5000 psi

Thickness of slab = 12 in

Size of anchor plate = 7" x 7.5" x 1.75" of Grade 36 steel.

Area of 1-3/8" bar = 1.58 in^2.

Maximum anchoring stress = 105 ksi (70% of GUTS)

Maximum anchoring force = 1.58 x 105 = 165.9 kips

Load factor = 1.2 (AASHTO LRFD 3.4.3.2)

Factored anchoring force = 1.2 x 165.9 = 199.1 kips

Anchor plate is designed according to AASHTO LRFD 5.10.9.7.2

$P_r = \varphi f_n A_b$

f_n is lesser of

$f_n = 0.7 f'ci \sqrt{\frac{A}{A_g}}$, and

$f_n = 2.25 f'ci$

$\varphi = 0.7$ (AASHTO LRFD 5.5.4.2)

For 12" depth slab,

$$\sqrt{\frac{A}{A_g}} = \sqrt{\frac{12x12.86}{7x7.5}} = 1.71$$

$f_n = 0.7 f'ci \sqrt{\frac{A}{A_g}} = 0.7 \text{ x } 5000 \text{ x } 1.71 = 5985$ psi

$f_n = 2.25 f'ci = 2.25 \text{ x } 5000 = 11250$ psi

Use $f_n = 5985$ psi

$p_r = \varphi f_n = 0.7 \; x \; 5985 = 4190$ psi

Developed factored bearing stress in concrete

$$= \frac{199100}{(7 \text{ x } 7.5 - \frac{\pi}{4} 1.875^2)} = 4003 \text{ psi} < 4190 \text{ psi, OK.}$$

The plate size is adequate in terms of bearing stress of concrete.

Check for stiffness of the plate:

As per AASHTO LRFD specs 5.10.9.7.2,

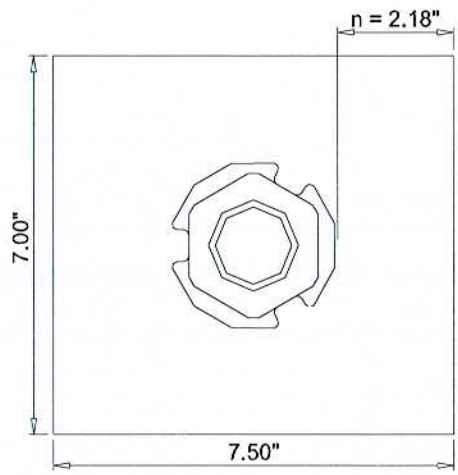

$$\frac{n}{t} \le 0.08\sqrt[3]{\frac{E_b}{f_b}}$$

$$\frac{n}{t} = \frac{2.18}{1.75} = 1.25$$

$E_b = 29000$ ksi

$f_b = 4.003/1.2 = 3.34$ ksi

$$0.08\sqrt[3]{\frac{E_b}{f_b}} = 0.08\sqrt[3]{\frac{29000}{3.34}} = 1.64$$

$$\frac{n}{t} < 0.08\sqrt[3]{\frac{E_b}{f_b}}\text{, OK.}$$

The plate is adequate in terms of stiffness.

Design the plate for 199.1 kips, which is equivalent to 3.40-ϕ0.6" strand system.

As per attached DSI bearing plate calculation program output, the plate is adequate in terms of shear and bending.

Use 7" x 7.5" x 1.75" of Grade 36 steel anchor plate.

BEARING PLATE CALCULATION
Title: SQUARE PLATE FOR 1-3/8" BAR (FDOT SPECS)

System . . . . . > (3.4)- 0 .6 in. dia.
Wedge plate size . . . . . > 2.77 in. dia x 3.531 in thick
Bearing plate size . . . . . > 7 x 7.5 x 1.75 (1.949 in. dia hole)
Hole under bearing plate . . . . > 1.949 (in. dia hole)

Average concrete stress (under %100.0% of GUTS) 4.02 ksi

Yield (Str.Bearing Plate) . . . . > 36.00 ksi

The following under load of %100.0% of GUTS:
Steel bearing stress . . . . . > 65.47 ksi, Contact stress, OK
Vertical shear in bearing plate . . > 3.84 ksi
Bending stress in bearing plate . . > 12.42 ksi
Bending stress-bottom . . . . . > 2.49 ksi
Bending stress-top of Wpl . . . . > -3.61 ksi
Friction coefficient . . . . . > 0.04

O/K.

Print, Rerun, Quit, Edit, Save, or Load . . (P/R/Q/E/S/L)

1-9-08

SAMPLE ANCHOR PLATE DESIGN FOR 1-3/8" GR 150 BAR

RECTANGULAR BEARING PLATE

Assumptions:

Concrete strength at stressing f'ci = 4000 psi

Thickness of slab = 12 in

Size of anchor plate = 5" x 9.5" x 2.0" of Grade 36 steel.

Area of 1-3/8" bar = 1.58 in^2.

Maximum anchoring stress = 105 ksi (70% of GUTS)

Maximum anchoring force = 1.58 x 105 = 165.9 kips

Load factor = 1.2 (AASHTO LRFD 3.4.3.2)

Factored anchoring force = 1.2 x 165.9 = 199.1 kips

Anchor plate is designed according to AASHTO LRFD 5.10.9.7.2

$P_r = \varphi f_n A_b$

f_n is lesser of

$f_n = 0.7 f'ci \sqrt{\frac{A}{A_g}}$, and

$f_n = 2.25 f'ci$

$\varphi = 0.7$ (AASHTO LRFD 5.5.4.2)

For 12" depth slab,

$$\sqrt{\frac{A}{A_g}} = \sqrt{\frac{12x22.8}{5x9.5}} = 2.4$$

$f_n = 0.7 f'ci \sqrt{\frac{A}{A_g}} = 0.7 \text{ x } 4000 \text{ x } 2.4 = 6720$ psi

$f_n = 2.25 f'ci = 2.25 \text{ x } 4000 = 9000$ psi

Use $f_n = 6720$ psi

$p_r = \varphi f_n = 0.7 \; x \; 6720 = 4704$ psi

Developed factored bearing stress in concrete

$$= \frac{199100}{(5 \text{ x } 9.5 - \frac{\pi}{4} 1.875^2)} = 4450 \text{ psi} < 4704 \text{ psi, OK.}$$

The plate size is adequate in terms of bearing stress of concrete.

Check for stiffness of the plate:

As per AASHTO LRFD specs 5.10.9.7.2,

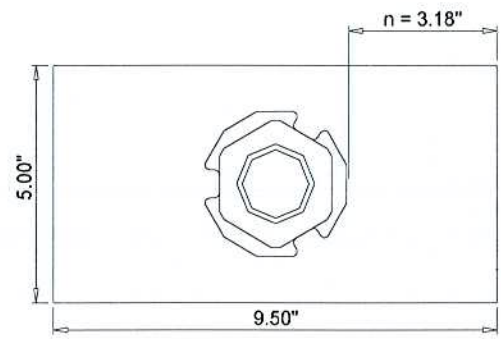

$$\frac{n}{t} \le 0.08\sqrt[3]{\frac{E_b}{f_b}}$$

$$\frac{n}{t} = \frac{3.18}{2.0} = 1.59$$

$E_b = 29000$ ksi

$f_b = 4.45/1.2 = 3.71$ ksi

$$0.08\sqrt[3]{\frac{E_b}{f_b}} = 0.08\sqrt[3]{\frac{29000}{3.71}} = 1.59$$

$$\frac{n}{t} = 0.08\sqrt[3]{\frac{E_b}{f_b}}, \text{ OK.}$$

The plate is adequate in terms of stiffness.

Design the plate for 199.1 kips, which is equivalent to 3.40-ϕ0.6" strand system.

As per attached DSI bearing plate calculation program output, the plate is adequate in terms of shear and bending.

Use 5" x 9.5" x 2.0" of Grade 36 steel anchor plate.

BEARING PLATE CALCULATION
Title: RECTANGULAR PLATE FOR 1-3/8" BAR (FDOT SPECS)

System . . . . . > (3.4)- 0 .6 in. dia.
Wedge plate size . . . . . > 2.77 in. dia x 3.531 in thick
Bearing plate size . . . . . > 5 x 9.5 x 2 (1.949 in. dia hole)
Hole under bearing plate . . . . > 1.875 (in. dia hole)

Average concrete stress (under %100.0% of GUTS) 4.47 ksi

Yield (Str.Bearing Plate) . . . . > 36.00 ksi

The following under load of %100.0% of GUTS:
Steel bearing stress . . . . . > 65.47 ksi, contact stress, ok
Vertical shear in bearing plate . . > 3.93 ksi
Bending stress in bearing plate . . > 17.90 ksi
Bending stress-bottom . . . . . > 3.35 ksi
Bending stress-top of Wpl . . . . > -3.85 ksi
Friction coefficient . . . . . > 0.04

ok

Print, Rerun, Quit, Edit, Save, or Load . . (P/R/Q/E/S/L)

1-9-08

DSI

SYSTEM 100

1”, 1-1/4” Nuts & 1-3/8” Anchor Nut Bar System Grout Cap

GROUT CAP PRESSURE TEST REPORTS

Per FDOT 462-4.2.7.1

Tests & Reports by Rone Engineering (2006)

Rone Engineering

8908 Ambassador Row, Dallas, TX 75247
4221 Freidrich Lane, Ste 195, Austin, TX 78744
7701 W Little York, Ste 600, Houston, TX 77040
Corporate Phone: (214) 630-9745

REPORT OF 1", 1 1/4", & 1 3/8" BAR GROUT CAP

Client: DSI
Mr. Mark Milici
525 Wanaque Ave
Pompton Lakes NJ 07442

Report No.: 902333
Project No.: 0510217
Date of Service: 08/24/2006
Report Date: 09/28/2006

Project: Florida DOT Testing

Services: Witness external system pressure test on bar grout cap.

Report of Test

On this date, a representative of Rone Engineering Services, Ltd. was present at the DSI facility in Bolingbrook, IL to witness an external system pressure test on a bar grout cap/bearing plate assembly. The grout cap, P/N B36E50700, is utilized on 1" and 1-1/4" nuts and 1-3/8" anchor nuts. The test was performed in accordance with Forida DOT Specification 462-4.2.7.1. Results are given below.

STAGE 1

The grout cap was secured to a steel plate (simulating attachment to bearing plate) utilizing four 3/8" stainless steel bolts. An O ring was installed to seal the grout cap to bearing plate connection. A 3/4" pipe was installed at the vent port with a shutoff valve and pressure gauge in line, through which to introduce air and monitor air pressure. The test setup passes the Stage 1 criteria.

STAGE 2

The assembly was pressurized to 150 psi and conditioned for three hours. Upon completion of the conditioning period the shutoff valve was closed and the pressure monitored for five minutes. Pressure was measured with a 160 psi pressure gauge calibrated on 07/17/06. After five minutes, a pressure loss of 3 psi was sustained by the grout cap assembly. The test passes the Stage 2 criteria.

Technician: Jack Gary
Report Distribution:
(1) DSI

Rone Engineering

Jack Gary
Special Testing

LIMITATIONS: The test results presented herein were prepared based upon the specific samples provided for testing. We assume no responsibility for variation in quality (composition, appearance, etc.) or any other feature of similar subject matter provided by persons or conditions over which we have no control. Our letters and reports are for the exclusive use of the clients to whom they are addressed and shall not be reproduced except in full without the written approval of Rone Engineering Services, Ltd.

DSI

POST-TENSIONING BARS

SYSTEM 100

59mm GTI PP DUCT TEST REPORTS
59mm DUCT MINIMUM BENDING RADUIS

Per FIB Bulletin No.7

"Corrugated Plastic Ducts for Internal Bonded Post-tensioning"

Test & Reports by Professional Services Industries (PSI)

DUCT TESTING OF 59MM

General Technologies, Inc.
13002 Trinity
Stafford, Texas 77477

Project: 59 MM Polypropylene (PP) Corrugated Duct P/N: 220200

Date: 4/6/05 Project No: 202-48050

The following test was witnessed by Professional Service Industries, Inc. (PSI) in accordance with test procedures and samples supplied by General Technologies, Inc. Test data and results are documented below:

Test #1 Dimensional Tolerance of Duct

Test Procedure

A test specimen of 59mm duct with a length of approximately 500mm was used. The internal diameter, d_1 was determined by means of a Vernier caliper (accuracy 0.1mm) (see Fig. A1.1). Measurements were taken at both ends of the specimen in two directions at right angles to one another. The mean values were calculated from the values obtained. Actual and mean values were recorded.

The following results were recorded:

Date of Test: 10-1-04

1) Wall Thickness "T"		2) Inside Diameter "D"	3) Rib Height "H"	
a.) 0.093	e.) 0.097	a.) 2.281	a.) 0.278	e) 0.289
b.) 0.100	f.) 0.095	b.) 2.282	b.) 0.275	f.) 0.288
c.) 0.092	g.) 0.089	c.) 2.266	c.) 0.264	g.) 0.274
d.) 0.088	h.) 0.105	d.) 2.285	d.) 0.286	h.) 0.286
Avg. 0.094 (2.49 mm)		Avg. 2.278 (57.86 mm)	Avg. 0.280 (7.11 mm)	

Test #2 Flexural Behavior of Duct without Coupler

Specimen

A section of 1100 mm length of duct under consideration was taken.

Test Procedure

The specimen was subjected to three-point-bending as shown in Fig. A2.1 by increasing the load F. The distance between the supports was 1000 mm.

The following results were recorded:

- Load F at instantaneous mid-span deflection of f = 20 mm,
- Load F after 2 minutes of mid-span deflection of f = 20 mm,
- Instantaneous residual mid-span deflection, f, after release of load F,
- Residual mid-span deflection f, 2 minutes after release of load F.

Date of Test: 08-20-04

a) Test span – 1 meter
b) Test deflection – 20 mm
c) Initial Load at 20 mm deflection – 25 newtons
d) 2-minute load at 20 mm deflection – 20 newtons
e) Initial deflection at release of load – 16.3 mm
f) Deflection after 2 minute load release – 18 mm

Test # 3 Flexibility of Duct with Coupler

Test Procedure

The specimen was bent slowly by hand around the template in each direction and repeated (see figure A3.1) over a length of 800 mm. For the sequence of bending, see Fig. A3.2. While in the last bent position in either bending direction, a steel plunger with the shape and the dimensions of di=59, dp=56, h1=70, h2=28, h3=42, r=5 was inserted and passed the specimen in the whole length, after the specimen had been held in the bent position for 2 minutes.

Date of Test: 10-1-04

- Radius – 1500 mm
- Radius length – 800 mm
- Duct length – 1100 mm with coupler at midspan – 550 mm
- Flexcycles – 2
- Plunger at drop test after 2 flexcycles – 56 mm plunger passed freely through duct after 2 cycles.

Test #4 – Lateral Load Resistance of Duct Only

Test Procedure

An 1100 mm long duct specimen was placed on a firm, 500 mm long base as shown on Fig. A4.1 and was subjected to a 150 lbs. load by means of a plunger provided with a cylindrical end with a diameter of 12 mm. Each test specimen was loaded twice in two different places between the ribs, where possible. The places of loading were situated in the middle part of the specimen and had a distance of 150 mm minimum from one another.The time of load application was 30 seconds. Immediately and 2 minutes after unloading, the smallest irreversible internal diameter of the sheath was determined at each loading point, and was recorded.

Date of Test: 10-1-04

	Location 1	Location 2
Deflection Immediately after Unloading	0.099"(2.51mm)	0.085"(2.16mm)
Deflection Two Minutes after Unloading	0.052"(1.32mm)	0.083"(2.11mm)

Test #5 Longitudinal Load Resistance with Coupler

Test Procedure

An 1100 mm long duct specimen was connected to at least one duct coupler and/or connection to an anchorage, and was subjected to an applied load as specified below over a period of 10 minutes (see Fig. A5.1). The applied deformation was 8 mm/m of free duct length between connector and base (1100 mm – 1_1). No internal stiffeners were used. The displacement of the coupler or connection in relation to the duct, occurring under the applied, was measured. This value was recorded.

Date of Test: 10-1-04

Load Applied	150 newtons	225 newtons	305 newtons
Deflection 1 (750mm)	3mm	4 mm	7 mm
Deflection 2 (958 mm)	2 mm	4 mm	6 mm
Deflection 3 (1104 mm)	3 mm	4 mm	6 mm
Final Deflection after 10 minutes			265 newtons at 6 mm

Test #6 Leak Tightness of Duct System with Coupler

Test Procedure

The test was conducted on an 1100 mm long duct specimen which has previously been subjected to test #'s 3, 4 and 5 including a connector but without re-assembly of duct/coupler connection. The duct specimen was bent with a template as described in Fig. A3.1, to the minimum radius of tendon curvature specified by the system holder including an allowance for specified duct placement tolerances on tendon supports further reducing the bending radius.

The specimen was pressure tested with water applied under a pressure of 0.5 bar (50 kPa) by sealing at both ends and inducing air pressure over a period of 5 minutes. The water pressure was first applied on the inside of the duct. Subsequently, the water pressure was applied from the outside of the duct.

Date of Test: 10/1/04

External Pressure by Internal Vacuum Test

1) Vacuum Pressure - 0.5 bar
2) Duration – 5 minutes
3) Results – no water visible inside duct after test.

Internal Pressure Test

1) Pressure – 0.5 bar
2) Duration – 5 minutes
3) Results – no water visible on outside of duct.

Test #7 Wear Test of Duct

Test Specimen
A four (4") inch length of the 59 mm duct was sectioned and formed in an aluminum holder with polyester resin.

Test Procedure
A twenty (20') foot test frame was assembled with 0.6" diameter strand stressed to 70% of total load (43.9 kips). The test specimen was compressed in its holder against the pre-tensioned cable to a load of 1500 lbs. while pulled 750 mm along the cable over a period of 20 minutes. The load was released after three (3) minutes from the specimen/holder and measurements of the duct specimen were recorded.

Date of Test: 09-15-04

	1	2	3	AVG
Duct Wall Thickness (Before Test)	.093"(2.36mm)	.091"(2.31mm)	.091"(2.31mm)	.092"(2.34mm)
Duct Wall Thickness (After Test)	.067"(1.70mm)	.068"(1.72mm)	.056"(1.42mm)	.064"(1.63mm)

Minimum Bend Radium Test

Test Specimen
A four (4") inch length of the 59 mm duct was sectioned and formed in an aluminum holder with shep rock used as a fill material.

Test Procedure
A thirty (30') foot test frame was assembled with 0.6" diameter strand stressed to 70% of total load (43.9 kips). The test specimen was compressed in its holder against the pre-tensioned cable to a load of 1500 lbs. The load was maintained for seven (7) days. The Load was released after seven (7) days and the specimens were removed from the holders And measurements of the duct specimen were recorded at three (3) locations.

Date of Test: 9/22/04

	1	2	3	AVG
Duct Wall Thickness (Before Test)	.122"(3.10mm)	.100"(2.54mm)	.112"(2.84mm)	.111"(2.82mm)
Duct Wall Thickness (After Test)	.087"(2.21mm)	.068"(1.73mm)	.074"(1.88mm)	.076"(1.93mm)

Test #8 Bond Test 59 mm Polypropylene (PP) Corrugated Duct P/N: 220200

Test procedure

Using 3 samples of 2 3/8" Polypropylene (PP) corrugated duct, pregrouted inside the duct, for a length of 40", 4 – 0.6" diameter strands. Strands supplied by GTI and reported to conform to ASTM 416. 4-0.6" strands were used inside the duct in order to apply the pull-out load on the sample.

Install pregrouted duct samples inside a reinforced concrete test block, in the horizontal position at 24" center to center, as shown on the attached drawings. Duct length embedded was 40" = 16 x 2.323" diameter (59mm) + 3". The 3" length was a short piece of coupler placed at the end of the corrugated sheathing as a bond breaker. An extra 5' length bare strand was provided for stressing tail.

Concrete compressive strength at time of stressing was 7,130 psi.

Following stressing sequence shown and using a calibrated hydraulic jack, gradually increase the load in 4 increments until 164.08 kips is reached. The load was increased to 175.62 kips the equivalent of 40% of 7 -15.7mm Supers strand force for Europe applications and then released. GTI indicated the purpose of the test is to prove that 16 diameters of duct length can provide enough bond to the surrounding concrete when the tendon is loaded to 40% GUTS of 7-0.6" strands (164.08 kips) then further increased to 40% GUTS of 7 -15.7mm Super strands (176.62 kips).

Date of Test: 03-25-04

Test Results

Fu=410.2 kips for 7-0.6",

Fu_{fib}=439 kips for 7-15.7mm Super Strand (62.72 kips/strand)

Gauge I.D.: 6-10304

Ram I.D.: B305

Concrete compressive strength of concrete at time of stressing= 7130 psi

Grout Compressive strength at time of stressing=8430 psi

See Attached Data sheet

Sample	Recorded Pressure (psi)	Recorded Load (kips)	Grout Column Dial gauge (inch)	Cable 1 Dial gauge (inch)	Cable 2 Dial gauge (inch)	Cable 3 Dial gauge (inch)	Duct Dial gauge (inch)	Grout Movement (inch)	Avg cable Movement (inch)	Duct Movement (inch)	P/Fu (%)	P/Fu_{fib} (%)
59-1	1150	41.5	0.402	1.514	1.607	1.482	0.986	0.000	0.000	0.000	10.1%	9.5%
	2300	83.1	0.401	1.514	1.607	1.482	0.986	0.001	0.000	0.000	20.3%	18.9%
	3400	122.8	0.400	1.514	1.605	1.481	0.986	0.002	0.000	0.000	30.0%	28.0%
	4600	166.2	0.400	1.514	1.605	1.480	0.985	0.002	0.000	0.001	**40.5%**	37.9%
	4900	177.0	0.399	1.513	1.605	1.480	0.985	0.003	0.001	0.001	43.2%	**40.3%**
		Movement (Inches)	**0.003**	**0.001**	**0.002**	**0.002**	**0.001**					
59-2	1150	41.5	0.028	1.452	1.456	0.601	1.016	40.9485	-0.988	-0.988	10.1%	9.5%
	2300	83.1	0.026	1.451	1.455	0.599	1.016	82.5	-0.99	-0.99	20.3%	18.9%
	3400	122.8	0.025	1.451	1.453	0.599	1.016	122.243	-0.991	-0.991	30.0%	28.0%
	4600	166.2	0.025	1.449	1.452	0.597	1.016	165.601	-0.991	-0.991	**40.5%**	37.9%
	4900	177.0	0.023	1.447	1.451	0.595	1.015	176.442	-0.992	-0.992	43.2%	**40.3%**
		Movement (Inches)	**0.005**	**0.005**	**0.005**	**0.006**	**0.001**					
59-3	1150	41.5	0.195	1.266	0.772	1.152	0.634	40.3975	-0.439	-0.439	10.1%	9.5%
	2300	83.1	0.195	1.265	0.772	1.150	0.632	81.949	-0.437	-0.437	20.3%	18.9%
	3400	122.8	0.194	1.265	0.772	1.150	0.632	121.692	-0.438	-0.438	30.0%	28.0%
	4600	166.2	0.192	1.263	0.771	1.149	0.631	165.049	-0.439	-0.439	**40.5%**	37.9%
	4900	177.0	0.192	1.263	0.771	1.147	0.631	175.89	-0.439	-0.439	43.2%	**40.3%**
		Movement (Inches)	**0.003**	**0.003**	**0.001**	**0.005**	**0.003**					

Witnessed by: Joe Yarborough, inspector with PSI
Test Location: 132111 Royal Avenue, Stafford

Limitations:
The services performed by PSI were performed in accordance with our proposed scope o services and the standard of care as practiced by professionals performing similar services in this geographic locale. Our testing and observations were not performed on a full time basis. Our testing and observations represent samples selected by our client. General Technologies, Inc. asserts that the samples were representative of the product produced. While the samples were selected by our client and reported to be representative of production materials, the specific test results are valid for the location and the material actually tested. No other warrantee or guarantee is expressed or implied This report may not be copied, except in the entirety, without the expressed written permission of PSI.

If you have any questions or require any additional information, please contact us at your convenience.

Respectfully submitted,
Professional Service Industries, Inc.

Michael D. Phares, CWI
District Manager

Iradj Ayazi, P.E.
Vice President

STATE OF TEXAS
IRADJ AYAZI
65505
REGISTERED PROFESSIONAL ENGINEER

4/12/05

GENERAL TECHNOLOGIES, INC.

Erich Aigner
DSI Bolingbrook

January 7, 2008

Dear Sir:

RE: 59mm Corrugated Plastic Duct Minimum Bending Radius

This letter will confirm that the 1,500 pound clamping force (1.5 kips) used in the testing corresponds to a 22.76 foot minimum bending radius for a 59mm diameter duct with 7 strands as calculated below.

fib formula for clamping force, Page 36 of fib Bulletin 7.

Clamping Force Q = $0.7*F_{tk}*A_p*k*l/R_{min}$

F_{tk} =	270	ksi
A_p =	0.217	square inches
k =	Cable Factor according to Fig. A 7.3	
l =	2 * s => 100 mm; assumed 4 inches!	
R_{min} =	Minimum Bending Radius	

Therefore

Mini Bending Radius **Rmin = $(0.7*F_{tk}*A_p*k*L)/Q$** where k= 2.5 for 7 strands

s= 4.0" or .333ft

= (0.7 x 270ksi x 0.217in2 x 2.5 x 0.333 ft)/1.5k

= **22.76 feet** $(K/in^2)*in^2*ft/K$

We trust that this information will be satisfactory.

Sincerely,

Joe Harrison, P.E.
Vice President, Marketing

13022 Trinity Drive, Stafford, P.O. Box 1503 Texas Tel: (281) 240-0550 Fax: (281) 240-0990

THE AMERICAN
ASSOCIATION
FOR LABORATORY
ACCREDITATION

ACCREDITED LABORATORY

A2LA has accredited

PROFESSIONAL SERVICE INDUSTRIES, INC.
Houston, TX

for technical competence in the field of

Construction Materials Testing

The accreditation covers the specific tests and types of tests listed on the agreed scope of accreditation. This laboratory meets the requirements of ISO/IEC 17025 - 1999 "General Requirements for the Competence of Testing and Calibration Laboratories" and any additional program requirements in the identified field of testing.

Presented this 9th day of August 2005.

President
For the Accreditation Council
Certificate Number 0037.01
Valid to April 30, 2007

For tests or types of tests to which this accreditation applies,
please refer to the laboratory's Construction Materials Scope of Accreditation.

American Association for Laboratory Accreditation

SCOPE OF ACCREDITATION TO ISO/IEC 17025-1999

PROFESSIONAL SERVICE INDUSTRIES, INC.
1714 Memorial Drive
Houston, TX 77007
Michael Lavelle Phone: 713 224 2047

Valid To: April 30, 2007 Certificate Number: 0037.01

In recognition of the successful completion of the A2LA evaluation process, accreditation is granted to this laboratory for:

CONSTRUCTION MATERIALS ENGINEERING

ASTM: E329 (materials), C1077 (concrete), D3666 (bituminous), D3740 (soils), E543 (nondestructive)

CONSTRUCTION MATERIALS TESTING

Concrete:

ASTM: C31* C39 C42* C78 C138* C143* C172* C173* C174
C192 C231* C293 C341 C403* C490 C495 C496 C513
C567 C617 C642 C684 C803* C805* C823* C878 C918
C939* C942 C1064 C1074* C1140 C1231

Masonry, Mortar, Grout, and Ceramic Tile:

ASTM: C67 (compression/absorption) C109 (compressive strength) C140 C426 C780
C1019 C1314

Aggregates:

ASTM: C29 C40 C70 C88 C117 C123 C127 C128 C136
C142 C566 C702 D75*

TSDHPT: TEX200F TEX201F TEX202F

Soils:

ASTM: D421 D422 D427 D558 D559 D698 D854 D1140 D1194*
D1556 D1557 D1633 D2168 D2216 D2217 D2487 D2488 D2901*
D2922* D2937* D3017* D3155* D3282 D3668 D4253 D4254 D4318
D4718 D4972

TSDHPT: TEX101E TEX112E TEX113E TEX114E TEX120E TEX128E TEX130E (Part II)
TEX140E

Bituminous:

ASTM: D290* D546 D979* D1074 D1075 D1188 D1559 D1560 D2041
D2172 D2726 D2950* D3203 D3549 D3665

TSDHPT: TEX204F TEX205F TEX206F TEX207F TEX208F TEX210F TEX221F TEX222F
TEX225F TEX226F TEX227F TEX233F

(A2LA Cert. No. 0037.01) 08/09/05

5301 Buckeystown Pike, Suite 350 • Frederick, MD 21704-8373 • Phone: 301-644 3248 • Fax: 301-662 2974

Lime:

TSDHPT: TEX600J (Hydrate Alkalinity, Dry Solids Content, Bulk Density at 77°F, Dry Lime Concrete, and Screen Analysis)

Roofing:

ASTM: D1863 (excluding hardness test) D1864

*Steel:

AISC: Bolt-Torque
AISC, ASME, AWS: Erection (visual), Fabrication, Welding (visual), Welding Qualification (both field and shop inspection)

*Nondestructive:

ASTM: E94 E114 E142 E164 E165 E213 E709

Floors:

ASTM: E1155*

* Site Tests

Peter Rhoyer

DSI

POST-TENSIONING BARS

SYSTEM 100

- **59mm GTI PP DUCT OIT TEST REPORTS**
- **59mm GTI PP DUCT CELL CLASS TEST REPORTS**
- **GTI 59mm DUCT COUPLER OIT TEST REPORTS**
- **GTI 59mm DUCT COUPLER NCLS TEST REPORTS**
- **TESTING AGENCY ACCREDIATION LETTER**

Per FDOT 462.4.2.5.5

Test & Reports by HAUSER Laboratories

HAUSER
LABORATORIES

October 22, 2004
Test Report No: 62538-06

CLIENT: General Technologies, Inc.
13022 Trinity Drive
Stafford, TX 77477
Attention: Joe Harrison PO 998009

SAMPLES: Two lengths of extruded white plastic corrugated duct were received from the Client, identified as White Polypropylene (PP) duct, with the printline indicating "X3F" and a date indication of "D42". One specimen of each piece was tested for Oxygen Induction Time (OIT).

All other specimens were received from the Akron Rubber Development Laboratory (ARDL), who molded ground-up PP duct which they received from the Client. Test specimens were molded there in accordance with ASTM D3641, as referenced by ASTM D4101 section 11. In addition, approximately one pound of ground-up PP duct from the same production run was received. All cell class testing was performed using these specimens.

TESTS: Specimens were compression-molded at 190°C to a thickness of 0.010 inches, and then were rapidly cooled to room temperature, for Oxidation Induction Time (OIT) tests. Testing was performed at 200°C in accordance with ASTM D3895-03. Specimens were die-cut from compression-molded films, and were tested in crimped aluminum pans.

Cell class testing was performed in accordance with the test methods and conditions referenced in ASTM D4101-02b.

RESULTS: See Table 1 for cell class and Table 2 for OIT.

The white PP duct exhibited test properties consistent with cell class PP_ _ _ _B45754, with Group, Class, and Grade specified by the Client as 03, 4, and 0 respectively. This gives an overall cell classification per ASTM D4101 PP0340B45754.

This report applies only to the sample(s) tested or analyzed. This report may be copied only in its entirety.

Table 1: Cell Class per ASTM D4101
Table B Property Levels

Designation Order No.	1	2	3	4	5
Property	Tensile yield stress	Flexural 1% secant modulus	Izod Impact resistance	Deflection Temperature at 455 kPa	Flow Rate condition 230/2.16
ASTM Test Method	D638-03 Type I, 2 ipm	D790-03 (A)	D256-04 @ 23°C, notched	D648-04	D1238-04
Average: SI Units	22.55 MPa	1020 MPa	624 J/m	91.7°C	4.42 g/10 min
Standard Dev: SI units	0.15 MPa	25 MPa	22 J/m	9.1°C	NA
Average: US units	3270 psi	147,900 psi	11.70 ft*lbf/in	197°F	NA
Standard Deviation: US units	22 psi	3600 psi	0.42 ft*lbf/in	16°F	NA
Cell digit	4	5	7	5	4

Table 2: OIT Values in minutes

Sample	OIT 1 (minutes)	OIT 2 (minutes)	Average (minutes)
Re-molded White PP Duct	24.8	21.1	23.0

REPORT WRITTEN BY:

David W. Woods
Senior Scientist

REPORT REVIEWED BY:

Steve Ferry
Director, Hauser Laboratories

This report applies only to the sample(s) tested or analyzed. This report may be copied only in its entirety.

ExxonMobil Chemical

ESCORENE®

Polypropylene

PP7032 E2
Copolymer Grade for Injection Molding

Description

Medium impact copolymer resin for general purpose injection molding.

Resin Properties	ASTM Method	Typical Values[1]	SI Units
Melt Flow Rate (230°C/2.16 kg)	D 1238	4.5 g/10 min	
Density	D 792	0.90 g/cm^3	
Mechanical Properties			
Tensile Strength @ Yield (2 in/min, 50 mm/min)	D 638	3.4 kpsi	24 MPa
Elongation @ Yield (2 in/min, 50 mm/min)	ExxonMobil Method	13 %	
Flexural Modulus, 1% Secant (0.05 in/min, 1.3 mm/min)	D 790A	146 kpsi	1010 MPa
Izod Impact Strength Notched, @ 23°C (73°F)	D 256 Method A	No Break	
Gardner Impact Strength 0.125 in. (3.2 mm) thick disk @ - 29°C (-20°F)	D 5420 Geometry GC	300 in-lb	34 J
Thermal Properties			
Heat Deflection Temperature @66 psi, 455 kPa	D 648	181°F	83°C
Typical Processing Temperature		400-475°F	204-246°C

1. Values given are typical and should not be interpreted as specification

FDA Status

This resin complies with FDA regulations 21 CFR 177.1520 (c)3.1a and (c)3.2a, and may be used as articles or components of articles intended for packing or holding food during cooking.

AMERICAS - Updated April 2000

©2000 ExxonMobil. The user may forward, distribute, and/or photocopy this copyrighted document only if unaltered and complete, including all of its headers, footers, disclaimers, and other information. You may not copy this document to a Web site. ExxonMobil does not guarantee the typical (or other) values. Typical values only represent the values one would expect if the property were tested in our laboratories with our test methods on the specified date. Some product properties are not frequently measured, and accordingly typical values are not based upon a statistically relevant number of tests. The information in this document relates only to the named product or materials when not in combination with any other product or materials. We based the information on data believed to be reliable on the date compiled, but we do not represent, warrant, or otherwise guarantee, expressly or impliedly, the merchantability, fitness for a particular purpose, suitability, accuracy, reliability, or completeness of this information or the products, materials, or processes described. The user is solely responsible for all determinations regarding any use and any process. We expressly disclaim liability for any loss, damage, or injury directly or indirectly suffered or incurred as a result of or related to anyone using or relying on any of the information in this document. There is no warranty against patent infringement, nor any endorsement of any product or process, and we expressly disclaim any contrary implication. The terms, "we", "our", "ExxonMobil Chemical", or "ExxonMobil" are used for convenience, and may include any one or more of ExxonMobil Chemical Company, Exxon Mobil Corporation, or any affiliates they directly or indirectly steward. The ExxonMobil Chemical Emblem, the "Interlocking X" Device, and Escorene are trademarks of Exxon Mobil Corporation.

The cell classification range for PP7032 E2 is from PP0330B44344 to PP0340B55754. The coding is detailed in the table below. Please note that the coding is based on the following PP7032 E2 properties.

Tensile @ yield: 24 MPa
Flex modulus (1% sec): 965-1076 MPa
RTNI: 117-534 J/m (or 2.2-10 ft-lb/in)
HDT: 84 C
MFR: 3.5-5.5 g/10 min

Code	PP	03	3	0	B	4	4	3	4	4
Property	poly type	IC P	medium impact	use other description	per Table B	Tensile 20 MPa	Flex 750 MPa	RTNI 100 J/m	HDT 80C	MFR >3 - 10
Code	PP	03	4	0	B	5	5	7	5	4
Property	poly type	IC P	high impact	use other description	per Table B	Tensile 25 MPa	Flex 1000 MPa	RTNI 500 J/m	HDT 90C	MFR >3 - 10

HAUSER
LABORATORIES

CLIENT: General Technologies, Inc.
13022 Trinity Drive
Stafford, TX 77477
Attention: Joe Harrison PO 998009

SAMPLES: Four molded plastic parts were received, identified as "Red Couplers" by the Client. The same box also contained one plastic bag containing irregular-shaped granular plastic material of the same color, identified by the Client as being "Ground-up Red Couplers." The material was further identified as being polyethylene, made to conform to "Item 462-4.2.3."

TESTS: All specimens were taken from plaques compression-molded from the ground-up couplers.

Testing was performed for Oxidation Induction Time (OIT) at 200°C in accordance with ASTM D3895-03. Specimens were die-cut from compression-molded films approximately 0.010 inches in thickness, and were tested in crimped aluminum pans.

Specimens die-cut from a compression-molded plaque 0.075 inches in thickness were tested for Notched Constant Ligament Stress (NCLS) in accordance with ASTM F2136-01, at a stress of 348 psi, at 50°C.

RESULTS: See Table 1 for NCLS and Table 2 for OIT.

Table 1: NCLS values in hours

Sample	average hours	std dev hours	Minimum hours
Re-molded Red Coupler	18.12	6.43	11.9

Table 2: OIT Values in minutes

Sample	OIT 1 (minutes)	OIT 2 (minutes)	Average (minutes)
Re-molded Red Coupler	99.7	126	113

REPORT WRITTEN BY:
David W. Woods
Senior Scientist

REPORT REVIEWED BY:
Steve Ferry
Director, Hauser Laboratories

This report applies only to the sample(s) tested or analyzed. This report may be copied only in its entirety.

HAUSER LABORATORIES www.hauserlabs.com a Division of Microbac Laboratories, Inc.
4750 Nautilus Court South, Unit A, Boulder, CO 80301-3240 Phone: 720 406 4800 Fax: 303 581 0195

THE AMERICAN ASSOCIATION FOR LABORATORY ACCREDITATION

ACCREDITED LABORATORY

A2LA has accredited

MICROBAC LABORATORIES, INC HAUSER LABORATORIES DIVISION

Boulder, CO

for technical competence in the field of

Mechanical Testing

The accreditation covers the specific tests and types of tests listed on the agreed scope of accreditation. This laboratory meets the requirements of ISO/IEC 17025 - 1999 "General Requirements for the Competence of Testing and Calibration Laboratories" and any additional program requirements in the identified field of testing.

Presented this 12th day of December 2005.

AMERICAN ASSOCIATION FOR LABORATORY ACCREDITATION
CORPORATE SEAL 1978
DISTRICT OF COLUMBIA
A2LA

President
For the Accreditation Council
Certificate Number 0018.04
Valid to June 30, 2007

For the tests or types of tests to which this accreditation applies, please refer to the laboratory's Mechanical Scope of Accreditation.

SCOPE OF ACCREDITATION TO ISO/IEC 17025-1999

MICROBAC LABORATORIES, INC.
HAUSER LABORATORIES DIVISION
4750 Nautilus Court South, Unit A
Boulder, CO 80301
Steve Ferry Phone: 720 406 4800

MECHANICAL

Valid To: June 30, 2007 Certificate Number: 0018.04

In recognition of the successful completion of the A2LA evaluation process, accreditation is granted to this laboratory to perform the following tests or testing sections of specifications on the following products and materials: plastics, furniture, plastic furniture, pipes, hoses, valves & fittings, pressure vessels, rubber & rubber products, sporting goods, composites, and metals:

GENERAL TESTING

Method	Title
ASTM B117	Practice for Operating Salt Spray Apparatus
ASTM C165	Method for Measuring Comprehensive Properties of Thermal Insulation
ASTM C203	Test Methods for Breaking Load and Flexural Properties of Block Type Thermal Insulation
ASTM D257	Test Methods for D-C Resistance or Conductance of Insulating Materials
ASTM D4060	Test Method for Abrasive Resistance of Organic Coatings by the Taber Abraser
ASTM D4329	Practice for Operating Light and Water Apparatus for Exposure of Plastics
ASTM G154	Standard Practice for Operating Fluorescent Light Apparatus for UV Exposure of Nonmetallic Materials
MIL-STD 810	Method 509
MIL-STD 883	1001, 1002, 1004.7, 1009.8, 1010.7, 1011.9, 2001.2
MIL-STD 3010	M2065 Puncture
UBC 15-5	Roof Tile

METALS TESTING

Method	Title
ASTM A90	Test Method for Weight of Coating on Iron and Steel Articles with Zinc-Alloy Coatings
ASTM B487	Standard Test Method for Measurement of Metal and Oxide Coating Thickness by Microscopical Examination of a Cross Section
ASTM E3	Method of Preparation of Metallographic Specimens
ASTM E8	Test Method for Tension Testing of Metallic Materials
ASTM E18	Test Methods for Rockwell Hardness and Rockwell Superficial Hardness of Metallic Materials
ASTM E340	Test Method for Macroetching Metals and Alloys
ASTM E384	Test Method for Microhardness of Materials
ASTM E407	Practice for Microetching Metals and Alloys

PLASICS, ELASTOMERS, COMPOSITES, ADHESIVES TESTING

Method	Title
ASTM E1382	Test Methods for Determining the Average Grain Size Using Semiautomatic and Automatic Image Analysis
ASTM D256	Test Method for Determining the Pendulum Impact Resistance of Notch Specimens of Plastic
ASTM D395B	Test Method for Rubber Property – Compressive Set
ASTM D412	Test Methods for Vulcanized Rubber and Thermoplastic Rubbers and Thermoplastic Elastomers
ASTM D471	Test Method for Rubber Property - Effect of Liquids
ASTM D543	Test Method for Resistance of Plastics to Chemical Reagents
ASTM D570	Test Method for Water Absorbency of Plastics
ASTM D624	Test Method for Tear Strength of Conventional Vulcanized Rubber and Thermoplastic
ASTM D638	Test Method for Tensile Properties of Plastics
ASTM D648	Test Method for Deflection Temperature of Plastics under Flexural Load
ASTM D695	Test Method for Compressive Properties of Rigid Plastics
ASTM D696	Test Method for Coefficient of Linear Thermal Expansion
ASTM D732	Test Method for Shear Strength of Plastics by Punch Tool
ASTM D746	Test Method for Brittleness Temperature of Plastics and Elastomers by Impact
ASTM D785	(Scales E, M and L only)
ASTM D790	Test Methods for Flexural Properties of Unreinforced and Reinforced Plastics and Electrical Insulating Materials
ASTM D792	Test Methods for Density and Specific Gravity of Plastics by Displacement
ASTM D882	Test Methods of Tensile Properties of Thin Plastic Sheeting
ASTM D903	Test Method for Peel or Stripping Strength of Adhesive Bonds
ASTM D1002	Test Method for Apparent Shear Strength of Single Lab Joint Adhesively Bonded Metal Specimens by Tension Loading
ASTM D1004	Test Method for Initial Tear Resistance of Plastic Film and Sheeting
ASTM D1062	Test Method for Cleavage Strength of Metal to Metal Adhesive Bonds
ASTM D1238	Test Method for Flow Rates of Thermoplastics by Extrusion Plastometer
ASTM D1505	Test Method for Density of Plastics by the Density Gradient Column Technique
ASTM D1525	Test Method for Vicat Softening Temperature of Plastics
ASTM D1603	Test Method for Carbon Black in Olefin Plastics
ASTM D1621	Test Method for Compressive Properties of Rigid Cellular Plastics
ASTM D1622	Test Method for Apparent Density of Rigid Cellular Plastics
ASTM D1623	Test Method for Tensile and Tensile Adhesion Properties of Rigid Cellular Plastics
ASTM D1693	Test Method for Environmental Stress Cracking of Ethylene Plastics
ASTM D1708	Test Method for Tensile Properties of Plastics by Use of Microtensile Specimens
ASTM D1790	Test Method for Brittleness Temperature of Plastic Sheeting by Impact
ASTM D1876	Test Method for Peel Resistance of Adhesives
ASTM D1894	Test Method for Static and Kinetic Coefficients of Friction of Plastic Film and Sheeting
ASTM D2126	Test Method for Response of Rigid Cellular Plastics to Thermal and Humid Aging
ASTM D2240	Test Method for Rubber Property – Durometer Hardness
ASTM D2290	Test Method for Apparent Tensile Strength of Ring or Tubular Plastics and Reinforced Plastics by Split Disk Method
ASTM D2583	Test Method for Indentation Hardness of Rigid Plastic by Means of a Barcol Impresser
ASTM D2584	Test Method for Ignition Loss of Cured Reinforced Resins

PLASICS, ELASTOMERS, COMPOSITES, ADHESIVES TESTING (Continued)

Method	Title
ASTM D2990	Test Method for Tensile, Compressive and Flexural Creep and Creep Rupture of Plastics
ASTM D3846	Test Method for In-Plane Shear Strength of Reinforced Plastics

PLASTIC PIPE & FITTINGS

Method	Title
AASHTO M-294	Standard Specification for Polyethylene Pipe, 300- to 1500-mm diameter (Sizes 12” through 18” only)
ASTM D1598	Test Method for Time-to-Failure of Plastic Pipe Under Constant Internal Pressure
ASTM D1599	Test Method for Short-Time Hydraulic Failure Pressure of Plastic Pipe, Tubing and Fittings
ASTM D1784	Specifications for Rigid PVC Compounds and CPVC Compounds
ASTM D1785	Specification for PVC Plastic Pipe Schedules 40, 80 and 120
ASTM D2122	Test Method for Determining Dimensions of Thermal Pipe and Fittings
ASTM D2143	Test Method for Cyclic Pressure Strength of Reinforced Thermosetting Plastic Pipe
ASTM D2152	Test Method for Adequacy of Fusion of Extruded PVC Pipe and Fittings by Acetone Immersion
ASTM D2241	Specification for PVC Pressure Rated Pipe-SDR Series
ASTM D2412	Test Method for Determination of External Loading Characteristics of Plastic Pipe by Parallel-Plate
ASTM D2444	Test Method for Determination of the Impact Resistance of Thermoplastic Pipe and Fittings by Means of a Tup (Failing Weight)
ASTM D2513	Specification for Thermoplastic Gas Pressure Pipe, Tubing and Fittings
ASTM D2837	Test Method for Obtaining Hydrostatic Design Basis for Thermoplastic Pipe Materials
ASTM D2846	Specification for Chlorinated Poly(Vinyl Chloride) (CPVC) Plastic Hot- and Cold-Water Distribution Systems
ASTM D3034	Specification for Type PSM PVC Sewer Pipe and Fittings
ASTM D3350	Specification of Polyethylene Plastic Pipe and Fittings Materials
ASTM D3567	Standard Practice for Determining Dimensions of “Fiberglass” (Glass-Fiber-Reinforced Thermosetting Resin) Pipe and Fittings
ASTM D3681	Test Method for Resistance of Fiberglass Pipe in Deflected Position
ASTM D5813	Specification for Cured-In Place Thermosetting Resin Sewer Pipe
ASTM F441	Specification for Chlorinated Poly(Vinyl Chloride) (CPVC) Plastic Pipe, Schedules 40 and 80
ASTM F477	Specification for Elastomeric Seals for Joining Plastic Pipe
ASTM F876	Specification for Crosslinked PEX Tubing
ASTM F877	Specification for Crosslinked PEX Plastic Hot and Cold Water Distribution Systems
ASTM F1057	Practice for Estimating the Quality of Extruded PVC Pipe by the Heat Reversion Technique
ASTM F1216	Practice for Rehabilitation of Existing Pipelines and Conduits by the Inversion and Curing of a Resin Impregnated Tube
ASTM F1336	Specification for Poly(Vinyl Chloride) (PVC) Gasketed Sewer Fittings
ASTM F1743	Practice for Rehabilitation of Existing Pipelines and Conduits by Pulled-in-Place Installation of Cured-in-Place Thermosetting Resin Pipe (CIPP)

PLASTIC PIPE & FITTINGS (Continued)

Method	Title
ASTM F2136	Test Method for Notched, Constant Ligament-Stress (NCLS) Test to Determine Slow-Crack-Growth Resistance of HDPE Resins or HDPE Corrugated Pipe
ASTM F2160	Specification for Solid Wall High Density Polyethylene (HDPE) Conduit Based on Controlled Outside Diameter (OD)
AWWA	C900, C901, C905, C906, C909
FDOT	Florida Method of Test for Determining Slow Crack Growth Resistance of HDPE Corrugated Pipes, Designation FM 5-572
PPI TR-3/05	Pipe HDB Testing

FLAMMABILITY

Method	Title
ASTM D1929	Test Method for Ignition Properties of Plastic
ASTM E681	Concentration Limits of Flammability of Chemical ((UEL: UEL)
FMVSS: 302	Flammability of Interior Materials-Automation
FTMS: 191a	Vertical Flame Resistance
CA106	Cigarette Test of Mattresses & Mattress Pads
CA116	Cigarette Test of Upholstered Furniture
CA117	Flame and Smolder Resistance – Test of Furniture Components
16 CFR 1610	Flammability of Clothing and Textiles

THERMAL

Method	Title
ASTM D3418	Standard Test Method for Transition Temperatures of Polymers by Differential Scanning Calorimetry (DSC)
ASTM D3895	Oxidative Induction Time for Polyolefins using DSC
ASTM E793	Standard Test Method for Enthalpies of Fusion and Crystallization by Differential Scanning Calorimetry (DSC)
ASTM E794	Test Method for Melting and Crystallization Temperatures by Thermal Analysis
ASTM E1269	Test Method for Determining Specific Heat Capacity by Differential Scanning Calorimetry
ASTM E1356	Test Method for Glass Transition Temperatures by Differential Scanning Calorimetry or Differential Thermal Analysis
FDOT	Florida Method of Test for Predicting the Oxidation Resistance of HDPE Corrugated Pipes Designation FM 5-574

DSI

POST-TENSIONING BARS

SYSTEM 100

OIT AND STRESS CRACK RESSISTANCE TEST REPORTS FOR:

- **DSI 21mm Standard and Heavy Duty Grout Hoses**
- **Bar Coupler Housing for 1”, 1-1/4” & 1-3/8” Bar Systems**
- **Plate Coupler Housing & 21mm grout tube cap**

TRI/ENVIRONMENTAL TEST AGENCY ACCREDIATION LETTER

Test & Reports by TRI/ENVIRONMENTAL

TRI / Environmental, Inc.
A Texas Research International Company

May 17, 2007

Mail To:

Mr. Mark Cwiertniak
Dywidag-Systems International USA, Inc. (DSI)
320 Marmon Drive
Bolingbrook, IL 60440

email: mark.cwiertniak@dsiamerica.com

Bill To:

<= Same (P.O. # 265740)

Dear Mr. Cwiertniak:

Thank you for consulting TRI/Environmental, Inc. (TRI) for your geosynthetics testing needs. TRI is pleased to submit this final report for laboratory testing.

TRI Job Reference Number: E2277-96-09

Material(s) Tested: 2 21mm Standard and Heavy Duty Grout Hoses (DSI Part #'s 00 00 801 & 00 00 802)

Test(s) Requested: Oxidative Induction Time (ASTM D 3895)
NCLS (ASTM F 2136 @ 348 psi)

If you have any questions or require any additional information, please call us at 1-800-880-8378.

Sincerely,

MPatel

Dr. Mansukh Patel
Sr. Laboratory Coordinator
Geosynthetic Services Division
www.GeosyntheticTesting.com

cc: Sam R. Allen, Vice President and Division Manager

GeosyntheticTesting.com
9063 Bee Caves Road / Austin, TX 78733 / 512 263 2101 / fax: 512 263 2558

TRI / Environmental, Inc.
A Texas Research International Company

LABORATORY TEST RESULTS

TRI Client: Dywidag-Systems International USA, Inc. (DSI)
Project: PO No. PO265740

Material: Plastic
Sample Identification: Standard 21mm Grout Tube
TRI Log #: E2277-96-09

PARAMETER		MEAN
Oxidative Induction Time (ASTM D 3895)		
OIT (minutes)	183	183

Notched Constant Ligament Stress Crack Test (ASTM F 2136)

SURFACTANT: CO-630
EXPOSURE PERIOD: 24 hours
DATE TEST STARTED: 16-May-07
TEST TEMPERATURE: 50C

Standard Stress 348 (psi)
x hinge thickness (in) 0.0570 (80 % of nominal sheet thickness)
x specimen width 0.125 (0.125")
Load 2.48 (lbs)

Mechanical Advantage 5
Lever Weight 0.33 (lbs)
Grip Weight 0.09 (lbs)

Applied load = (Load - Lever Weight + Grip Weight)/Mechanical Advantage = 0.45 lbs = 203 grams

Replicate No.:	1	2	3	4	5	
No. Hours to Failure:	>24	>24	>24	>24	>24	>24

The testing is based upon accepted industry practice as well as the test method listed. Test results reported herein do not apply to samples other than those tested. TRI neither accepts responsibility for nor makes claim as to the final use and purpose of the material. TRI observes and maintains client confidentiality. TRI limits reproduction of this report, except in full, without prior approval of TRI.

GeosyntheticTesting.com
9063 Bee Caves Road / Austin, TX 78733 / 512 263 2101 / fax: 512 263 2558

TRI / Environmental, Inc.
A Texas Research International Company

LABORATORY TEST RESULTS

TRI Client: Dywidag-Systems International USA, Inc. (DSI)
Project: PO No. PO265740

Material: Plastic
Sample Identification: 21mm Heavy Duty Grout Tube
TRI Log #: E2277-96-09

PARAMETER		MEAN
Oxidative Induction Time (ASTM D 3895)		
OIT (minutes)	171	171

Notched Constant Ligament Stress Crack Test (ASTM F 2136)

SURFACTANT: CO-630
EXPOSURE PERIOD: 24 hours
DATE TEST STARTED: 16-May-07
TEST TEMPERATURE: 50C

Standard Stress 348 (psi)
x hinge thickness (in) 0.0600 (80 % of nominal sheet thickness)
x specimen width 0.125 (0.125")
Load 2.61 (lbs)

Mechanical Advantage 5
Lever Weight 0.33 (lbs)
Grip Weight 0.09 (lbs)

Applied load = (Load - Lever Weight + Grip Weight)/Mechanical Advantage = 0.47 lbs = 215 grams

Replicate No.:	1	2	3	4	5	
No. Hours to Failure:	>24	>24	>24	>24	>24	>24

The testing is based upon accepted industry practice as well as the test method listed. Test results reported herein do not apply to samples other than those tested. TRI neither accepts responsibility for nor makes claim as to the final use and purpose of the material. TRI observes and maintains client confidentiality. TRI limits reproduction of this report, except in full, without prior approval of TRI.

GeosyntheticTesting.com
9063 Bee Caves Road / Austin, TX 78733 / 512 263 2101 / fax: 512 263 2558

July 12, 2006 (Updated May 9, 2007 to include DSI Part #s)

Mail To:

Mr. Jerry Buchanan
Dywidag-Systems International USA, Inc. (DSI)
320 Marmon Drive
Bolingbrook, IL 60440

email: jerry.buchanan@dsiamerica.com

Bill To:

<= Same (P.O. # 235062)

Dear Mr. Buchanan:

Thank you for consulting TRI/Environmental, Inc. (TRI) for your geosynthetics testing needs. TRI is pleased to submit this final report for laboratory testing.

TRI Job Reference Number: E2262-52-02

Material(s) Tested: Trumpet & Coupler and Bar Coupler Housing, P/N U06008010
(DSI Part #'s 68 27 587, 68 27 585, 68 12 587 & 68 12 585)

Test(s) Requested: Oxidative Induction Time (ASTM D 3895)
NCLS (ASTM F 2136 @ 348 psi)

If you have any questions or require any additional information, please call us at 1-800-880-8378.

Sincerely,

Sam R. Allen

Sam R. Allen
Vice President and Division Manager
Geosynthetic Services Division
www.GeosyntheticTesting.com

GeosyntheticTesting.com
9063 Bee Caves Road / Austin, TX 78733 / 512 263 2101 / fax: 512 263 2558

GEOMEMBRANE TEST RESULTS

TRI Client: Dywidag-Systems International USA, Inc. (DSI)
Project: PO No. PO235062

Material: Plastic
Sample Identification: Trumpet and Coupler for 27-0.6 System and for 1", 1-1/4", 1-3/8" PT Bar Coupler Housing, P/N U06008010
TRI Log #: E2262-52-02

PARAMETER		MEAN
Oxidative Induction Time (ASTM D 3895)		
OIT (minutes)	92	92

Notched Constant Ligament Stress Crack Test (ASTM F 2136)

SURFACTANT: CO-630
EXPOSURE PERIOD: Failure
DATE TEST STARTED: 26-Jun-06
TEST TEMPERATURE: 50C

Standard Stress 348 (psi)
x hinge thickness (in) 0.0600 (80 % of nominal sheet thickness)
x specimen width 0.125 (0.125")
Load 2.61 (lbs)

Mechanical Advantage 5
Lever Weight 0.33 (lbs)
Grip Weight 0.09 (lbs)

Applied load = (Load - Lever Weight + Grip Weight)/Mechanical Advantage = 0.48 lbs = 218 grams

Replicate No.:	1	2	3	4	5	
No. Hours to Failure:	>24	>24	>24	>24	>24	>24

The testing is based upon accepted industry practice as well as the test method listed. Test results reported herein do not apply to samples other than those tested. TRI neither accepts responsibility for nor makes claim as to the final use and purpose of the material. TRI observes and maintains client confidentiality. TRI limits reproduction of this report, except in full, without prior approval of TRI.

GeosyntheticTesting.com
9063 Bee Caves Road / Austin, TX 78733 / 512 263 2101 / fax: 512 263 2558

GEOMEMBRANE TEST RESULTS

TRI Client: Dywidag-Systems International USA, Inc. (DSI)
Project: PO No. PO235062

Material: Plastic
Sample Identification: Trumpet and Coupler for 12-0.6 System and for 1", 1-1/4", 1-3/8" PT Bar Coupler Housing, P/N U06008010
TRI Log #: E2262-52-02

PARAMETER		MEAN
Oxidative Induction Time (ASTM D 3895)		
OIT (minutes)	100	100

Notched Constant Ligament Stress Crack Test (ASTM F 2136)

SURFACTANT: CO-630
EXPOSURE PERIOD: Failure
DATE TEST STARTED: 26-Jun-06
TEST TEMPERATURE: 50C

Standard Stress 348 (psi)
x hinge thickness (in) 0.0600 (80 % of nominal sheet thickness)
x specimen width 0.125 (0.125")
Load 2.61 (lbs)

Mechanical Advantage 5
Lever Weight 0.33 (lbs)
Grip Weight 0.09 (lbs)

Applied load = (Load - Lever Weight + Grip Weight)/Mechanical Advantage = 0.48 lbs = 218 grams

Replicate No.:	1	2	3	4	5	MEAN
No. Hours to Failure:	>24	>24	>24	>24	>24	>24

The testing is based upon accepted industry practice as well as the test method listed. Test results reported herein do not apply to samples other than those tested. TRI neither accepts responsibility for nor makes claim as to the final use and purpose of the material. TRI observes and maintains client confidentiality. TRI limits reproduction of this report, except in full, without prior approval of TRI.

GeosyntheticTesting.com
9063 Bee Caves Road / Austin, TX 78733 / 512 263 2101 / fax: 512 263 2558

November 29, 2007

Mail To:

Mr. Mark Cwiertniak
Dywidag-Systems International USA, Inc. (DSI)
320 Marmon Drive
Bolingbrook, IL 60440

email: mark.cwiertniak@dsiamerica.com

Bill To:

<= Same (P.O. # PO280269)

Dear Mr. Cwiertniak:

Thank you for consulting TRI/Environmental, Inc. (TRI) for your geosynthetics testing needs. TRI is pleased to submit this final report for laboratory testing.

TRI Job Reference Number:	E2299-80-08
Material(s) Tested:	One 5-1/2" Odx 2-1/4" ID Pipe (See NOTES on Page 2 for DSI Part Numbers)
Test(s) Requested:	NCLS (ASTM F 2136 @ 348 psi) Oxidative Induction Time (ASTM D 3895)

If you have any questions or require any additional information, please call us at 1-800-880-8378.

Sincerely,

MPatel

Dr. Mansukh Patel
Sr. Laboratory Coordinator
Geosynthetic Services Division
www.GeosyntheticTesting.com

cc: Sam R. Allen, Vice President and Division Manager

LABORATORY TEST RESULTS

TRI Client: Dywidag-Systems International USA, Inc. (DSI)

Material: 5-1/2" Odx 2-1/4" ID Pipe
Sample Identification: No Label (See NOTES at bottom of this page for DSI Part Numbers covered by this test report)
TRI Log #: E2299-80-08

PARAMETER		MEAN
Notched Constant Ligament Stress Crack Test (ASTM F2136)		

SURFACTANT: CO-630
EXPOSURE PERIOD: **300 hrs**
DATE TEST STARTED: **16-Nov-07**
TEST TEMPERATURE: 50C

Standard Stress **348** (psi)
x hinge thickness (in) **0.0624** (80 % of nominal sheet thickness)
x specimen width 0.124 (0.124")
Load 2.69 (lbs)

Mechanical Advantage 5
Lever Weight 0.33 (lbs)
Grip Weight 0.09 (lbs)

Applied load = (Load - Lever Weight + Grip Weight)/Mechanical Advantage = 0.49 lbs = 223 grams

Replicate No.:	1	2	3	4	5	MEAN
Thickness:	0.0705	0.0740	0.0750	0.0775	0.0780	
Hinge:	0.0564	0.0592	0.0600	0.0620	0.0624	
Load:	199	210	213	221	223	
No. Hours to Failure:	>300	>300	>300	>300	>300	**>300**

Oxidative Induction Time (ASTM D 3895)

OIT (minutes)	92	**92.0**

The testing is based upon accepted industry practice as well as the test method listed. Test results reported herein do not apply to samples other than those tested. TRI neither accepts responsibility for nor makes claim as to the final use and purpose of the material. TRI observes and maintains client confidentiality. TRI limits reproduction of this report, except in full, without prior approval of TRI.

NOTES:
This OIT and NCLS Test Report is valid for the following DSI Part Numbers:
1. Plate Coupler Connector, P/N B36E52210
2. Segmental Coupler Base Housing, P/N 68 12 331, 68 19 331 & 68 27 331
3. Segmental Coupler Bulkhead Base Housing, P/N 68 12 332, 68 19 332 & 68 27 332
4. 21mm Grout Tube Cap, P/N 00 00 841

GeosyntheticTesting.com
9063 Bee Caves Road / Austin, TX 78733 / 512 263 2101 / fax: 512 263 2558

Accreditation #:
GAI-LAP -1 -95
TEL (610) 522-8440

Geosynthetic Institute
475 Kedron Ave.
Folsom, PA 19033

TRI Environmental, Inc.

is granted accreditation
for designated geosynthetic test methods in accordance with the Geosynthetic Accreditation Institute - Laboratory Accreditation Program (GAI-LAP), as published in its annual directory.
This accreditation is valid until June 30, 2007.

Robert M. Koerner, Ph.D., P.E.
Director

GRI
GEI
GII
GSI
GAI
GCI

George R. Koerner, Ph.D., P.E. & CQA
Auditor

© GOES 74

Geosynthetic Institute
475 Kedron Avenue
Folsom, PA 19033-1208 USA
TEL (610) 522-8440
FAX (610) 522-8441

Mr. Sam Allen
TRI/ Environmental Inc.
9063 Bee Caves Road
Austin, TX 78733-6201

June 28, 2006

Re: GAI-LAP Accreditation

Dear Mr. Allen,

The Geosynthetic Institute (GSI) is pleased to acknowledge TRI/ Environmental Inc. on its repertoire of Geosynthetic Accreditation Institute's-Laboratory Accreditation Program (GAI-LAP) accredited tests. This letter should serve as notification that TRI/ Environmental Inc. located in Austin, TX is currently accredited for the following one hundred and eighteen test methods until June 30, 2007.

1. ASTM D413 Test Methods for Rubber Property — Adhesion to Flexible Substrate
2. ASTM D570 Test Method for Water Absorption of Plastics
3. ASTM D638 Test Method for Tensile Properties of Plastics
4. ASTM D696 Test Method for Coefficient of Linear Thermal Expansion of Plastics
5. ASTM D746 Test Method for Brittleness Temperature of Plastics and Elastomers by Impact
6. ASTM D751 Test Methods for Coated Fabrics (thickness), (mass/unit area), (tongue tear), (grab), (hydrostatic resistance) and/or (bonded seam strength)
7. ASTM D790 Test Method for Flexural Properties of Unreinforced and Reinforced Plastics and Electrical Insulating Materials
8. ASTM D792 Test Method for Specific Gravity (Relative Density) and Density of Plastics by Displacement
9. ASTMD882 Test Methods for Tensile Properties of Thin Plastic Sheeting (strip tensile)
10. ASTM D1004 Test Method for Initial Tear Resistance of Plastic Film and Sheeting
11. ASTM D1203 Test Method for Volatile Loss from Plastics Using Activated Carbon Methods
12. ASTM D1204 Test Method for Linear Dimensional Changes of Nonrigid Thermoplastic Sheeting or Film at Elevated Temperature
13. ASTM D1238 Test Method for Flow Rates of Thermoplastics by Extrusion Plastometer
14. ASTM D1388 Test Method for Stiffness of Fabrics
15. ASTM D1505 Test Method for Density of Plastics by the Density-Gradient Technique
16. ASTM D1593 Specification for Nonrigid Vinyl Chloride Plastic Sheeting (thickness)
17. ASTM D1603 Test Method for Carbon Black in Olefin Plastics
18. ASTM D1621 Test Method for Compressive Properties of Rigid Cellular Plastics

19. ASTM D1693Test Method for Environmental Stress-Cracking of Ethylene Plastics
20. ASTM D1777 Test Method for Measuring Thickness of Textile Materials
21. ASTM D1987 Test Method for Biological Clogging of Geotextile or Soil Geotextile Filters
22. ASTM D2122 Test Method for Determining Dimensions of Thermoplastic Pipe and Fittings
23. ASTM D2136 Test Method for Coated Fabrics-Low Temperature Bend Test
24. ASTM D2240 Test Method for Measuring Durometer Hardness
25. ASTM D2412 Test Method for Determination of the External Loading Characteristics of Plastic Pipe by Parallel-Plate Loading
26. ASTM D2444 Test Method for Determination of the Impact Resistance of Thermoplastic Pipe Fittings by Means of a Tup (Falling Weight)
27. ASTM D3015 Standard Practice for Microscopic Examination of Pigment Dispersion in Plastic Compounds
28. ASTM D3030 Test Method for Volatile Matter (Including Water) of Vinyl Chloride Resins
29. ASTM D3083 Standard Specification for Flexible Poly (Vinyl Chloride) Plastic Sheeting for Pond, Canal, and Reservoir Lining, (soil burial), (water extraction) and/or (bonded seam strength)
30. ASTM D3350 Specification for Polyethylene Plastic Pipe and Fittings Materials
31. ASTM D3776 Test Method for Mass Per Unit Area (Weight) or Woven Fabric
32. ASTM D3786 Test Method for Hydraulic Burst Strength of Knitted Goods and Nonwoven Fabrics (Diaphragm Bursting Strength Tester Method)
33. ASTM D3895 Test Methods for Oxidative-Induction Time of Polyolefins by Differential Scanning Calorimetry
34. ASTM D4218 Test Method for Carbon Black Content in Polyethylene Compounds by the Muffle-Furnace Technique
35. ASTM D4355 Test Method for Determination of Geotextiles from Exposure to Ultraviolet Light and Water (Xenon-Arc Type Apparatus)
36. ASTM D4437 Standard of Practice for Determining the Integrity of Field Seams Used in Joining Flexible Polymeric Sheet Geomembranes, peel, shear
37. ASTM D4491 Test Methods for Water Permeability of Geotextiles by Permittivity
38. ASTM D4533 Test Method for Index Trapezoidal Tearing Strength of Geotextiles
39. ASTM D4545 Standard Practice for Determining the Integrity of Factory Seams used in Joining Manufactured Flexible Sheet Geomembranes, peel, shear
40. ASTM D4594 Test Method for Effects of Temperature on Stability of Geotextile
41. ASTM D4595 Test Method for Tensile Properties of Geotextiles by the Wide-Width Strip Method
42. ASTM D4603 Test Method for Determining Inherent Viscosity of Poly (Ethylene Terephthalate) (PET)
43. ASTM D4632 Test Method for Grab Breaking Load and Elongation of Geotextiles
44. ASTM D4716 Test Method for Determining the (In-Plane) Flow Rate per Unit Width and Hydraulic Transmissivity of a Geosynthetic Using a Constant Head
45. ASTM D4751 Test Method for Determining Apparent Opening Size of a Geotextile
46. ASTM D4833 Test Method for Index Puncture Resistance of Geotextiles, Geomembranes and Related Products

47. ASTM D4884 Test Method for Seam Strength of Sewn Geotextiles
48. ASTM D4885 Test Method for Determining Performance Tensile Strength of Geomembranes Using Wide Strip Testing
49. ASTM D4886 Test Method for Abrasion Resistance of Geotextiles (Sand Paper/Sliding Block Method)
50. ASTM D5035 Test Method for Breaking Strength and Elongation of Textile Fabrics (Strip Method)
51. ASTM D5101 Test Method for Measuring the Soil-Geotextile System Clogging Potential by the Gradient Ratio
52. ASTM D5199 Test Method for Measuring Nominal Thickness of Geotextiles and Geomembranes
53. ASTM D5261 Test Method for Measuring Mass per Unit Area of Geotextiles
54. ASTM D5262 Test Method for Evaluating the Unconfined Tension Creep Behavior of Geosynthetics
55. ASTM D5321 Test Methods for Determining the Coefficient of Soil and Geosynthetic or Geosynthetic and Geosynthetic Friction by the Direct Shear Method,
56. ASTM D5322 Standard Practice for Immersion Procedures for Evaluating the Chemical Resistance of Geosynthetics to Liquids
57. ASTM D5323 Determination of 2% Secant Modulus for Polyethylene Geomembranes
58. ASTM D5397 Test Method for Evaluation of Stress Crack Resistance of Polyolefin Geomembranes using Notched Constant Tension Load Test
59. ASTM D5493 Test Method for the Permittivity of Geotextiles Under Load
60. ASTM D5494 Test Methods for the Determination of Pyramidal Puncture Resistance of Unprotected and Protected Geomembranes
61. ASTM D5514 Test Method for Large Scale Hydrostatic Puncture Testing of Geosynthetics
62. ASTM D5596 Test Methods for Microscopic Evaluation of the Dispersion of Carbon Black in Polyolefin Geosynthetics
63. ASTM D5617 Test Methods for Multi-Axial Tension Test for Geosynthetics
64. ASTM D5721 Standard Practice for Air-Oven Aging of Polyolefin Geomembranes
65. ASTM D5818 Standard Practice for Obtaining Samples of Geosynthetics from a Test Section for Assessment of Installation Damage
66. ASTM D5884 Test Method for the Tearing Strength of Internally Reinforced Geomembranes
67. ASTM D5885 Standard Test Method for Oxidative Induction Time of Polyolefin Geosynthetics by High-Pressure Differential Scanning Calorimetry
68. ASTM D5887 Standard Test Method for Measurement of Index Flux Through Saturated Geosynthetic Clay Liners Specimens Using a Flexible Wall Permeameter
69. ASTM D5890 Standard Test Method for Swell Index of Clay Mineral Component of Geosynthetic Clay Liners
70. ASTM D5891 Standard Test Method for Fluid Loss of Clay Component of Geosynthetic Clay Liners
71. ASTM D5993 Test Method for Measuring the Mass Per Unit Area of GCL
72. ASTM D5994 Test Method for Measuring the Core Thickness of Textured Geomembranes

73. ASTM D6140 Test Method for Determine of Asphalt Retention of Paving Fabrics Used in Asphalt Paving for Full Width Applications
74. ASTM D6214 Test Method for Determining the Integrity of Field Seams Used in Joining Geomembranes by Chemical Fusion Methods
75. ASTM D6241 Test Method for the Static Puncture Strength of Geotextiles and Geotextile Related Products Using a 50-mm Probe
76. ASTM D6243 Test Method for Determine the Internal and Interface Shear Resistance of Geosynthetic Clay Liners by the Direct Shear Method
77. ASTM D6364 Test Method for Determining the Short-Term Compression Behavior of Geosynthetics
78. ASTM D6392 Standard Test Method for Determining the Integrity of Nonreinforced Geomembrane Seams Produced Using Thermo-Fusion Methods
79. ASTM D6454 Standard Test Method for Determining the Short-Term Compression Behavior of Turf Reinforcement Mats (TRMs)
80. ASTM D6475 Test Method for Measuring Mass Per Unit Area of Erosion Control Blankets
81. ASTM D6496 Test Method for Determining the Average Bonding Peel Strength Between Top and Bottom Layers of Needle-Punched Geosynthetic Clay Liners
82. ASTM D6524 Test Method for Measuring Resiliency of Turf Reinforcement Mats (TRMs)
83. ASTM D6525 Test Method for Measuring Nominal Thickness of Permanent Erosion Control Products
84. ASTM D6566 Test Method for Measuring Mass per Unit Area of Turf Reinforcement Mats (TRMs)
85. ASTM D6567 Test Method for Measuring Light Penetration of Turf Reinforcement Mat (TRM)
86. ASTM D6574 Test Method for Determining the In-plane Hydraulic Transmissivity of a Geosynthetic by Radial Flow
87. ASTM D6575 Test Method for Determining Stiffness of Geosynthetics used as Turf Reinforcement Mats
88. ASTM D6636 Test Method for Determination of Ply Adhesion Strength of Reinforced Geomembranes
89. ASTM D6637 Test Method for Determining Tensile Properties of Geogrids by the Single or Multi-Rib Tensile Method
90. ASTM D6638 Test Method for Determining Connection Strength Between Geosynthetic Reinforcement and Segmental Concrete Units (Modular Concrete Blocks)
91. ASTM D6693 Test Method for Determining Tensile Properties of Nonreinforced Polyethylene and Nonreiforced Flexible Polypropylene Geomembranes
92. ASTM D6706 Test Method for Determining Pull-Out Resistance of Geosynthetics
93. ASTM D6766 Test Method for Evaluation of Hydraulic Properties of Geosynthetic Clay Liners Permeated with Potentially Incompatible Liquids
94. ASTM D6768 Test Method for Tensile Strength of Geosynthetic Clay Liners
95. ASTM D6818 Test Method for Ultimate Tensile Properties of Turf Reinforcement Mats

96. ASTM D6992 Test Method for Time-Temperature Superposition Using Stepped Isothermal Method
97. ASTM D7003 Test Method for Strip Tensile Properties of Reinforced Geomembranes
98. ASTM D7004 Test Method for Grab Tensile Properties of Reinforced Geomembranes
99. ASTM D7005 Test Method for Determining the Bond Strength (Ply Adhesion) of Geocomposites
100. ASTM E96 Test Method for Water Vapor Transmission of Materials
101. ASTM F904 Test Method for Comparison of Bond Strength or Ply Adhesion of Similar Laminates Made from Flexible Materials
102. ASTM F1473 Test Method for Notched Tensile Test to Measure the Resistance to Slow Crack Growth of Polyethylene Pipes and Resins
103. ASTM F2136 Test Method for Notched, Constant-Ligament-Stress (NCLS) Test to Determine Slow Crack-Growth Resistance of HDPE Resins and HDPE Corrugated Pipe
104. FTM STD. No. 101c (method 2065-82), Puncture Resistance and Elongation Test (1/8 in. radius probe)
105. GRI GG-1 Geogrid Rib Tensile Strength
106. GRI GG-2 Geogrid Junction Strength
107. GRI GG-7 Carboxyl End Group Content of PET Yarns
108. GRI GG-8 Determination of the Number Average Molecular Weight of PET Yarns Based on Relative Viscosity Value
109. GRI GM-11 Accelerated Weathering of Geomembranes Using a Fluorescent UVA Device
110. GRI GM-12 Asperity Measurement of Textured Geomembranes Using a Depth Gage
111. GRI GS-7 Determining the Index Friction Properties of Geosynthetics
112. ISO 10319 Wide Width Tensile Test of Geotextiles and Geogrids
113. ISO 10722 Installation Damage
114. ISO 12236 Determination of Static CBR Puncture Test
115. ISO 12957 (1&2) Coefficient of Friction
116. ISO 13431 Determination of the Tensile Creep and Creep Rupture Behavior
117. ISO 13438 Temperature (Oxidation) Stability
118. ISO 13439 Hydrolysis Resistance

Any questions regarding your accreditation should be directed to George or Robert Koerner at (610) 522-8440. Once again congratulation and thank you for participating in the GAI-LAP.

Best Regards,

George R. Koerner, Ph.D., P.E. & CQA
Director Designate

Visit us on the Web at www.jcplastics.com
JC PLASTICS INC.
840 Linden Avenue
Rochester, New York 14625
(585) 385 - 2236 Fax: (585) 385 - 8675
Email: jcpi@jcplastics.com

3-22-07

DSI International
320 Marmon Dr.
Boilingbrook IL 60440-3078

Attn: Mr. Mark Cwiertniak

Dear Mr. Cwiertniak

Please let this letter serve as certification that EPS Polymer Distribution material, grade PA6 GF 20 BK Nylon 6, 20% GF complies with ASTM Specification D 5989 – 03 Cell Classification S-PA 0141.

We use the above-mentioned material for the following DSI Parts:

68 07 7230 Grout Cap
68 12 7230 Grout Cap
68 19 7230 Grout Cap
68 27 7230 Grout Cap
68 04 2539 Grout Cap 4.06

B36E 50700 Bar Cap
B46E 50700 Bar Cap
B65E 50700 Bar Cap

00 00 845 21mm Female ¾ NPT Male Adaptor
00 00 846 21mm Male ¾ NPT Female Adaptor

68 07 589 Filler Piece
68 12 589 Filler Piece
68 19 589 Filler Piece
68 27 589 Filler Piece

Sincerely,
Paul Sirus
VP Manufacturing.
JC Plastics, Inc.

DSI

POST-TENSIONING BARS

SYSTEM 100

FULL SCALE PRESSURE TEST REPORTS FOR:

- **1-3/8” uncoupled PT Bar System**
- **1”, 1-1/4” and 1-3/8” coupled PT Bar Systems**

Concrete Technology Laboratories TEST AGENCY ACCREDIATION LETTER

Test & Reports by CTL

Report of 1-3/8" DSI Post-tensioning Threadbar Full Scale System Pressure Test
TEST Witnessed for Dywidag Systems International, USA, Inc.

Date of Report: 7/19/2007 CTLGroup Project Number: 330093

Date of Test: 07/17/2007

DSI Contact Information: Mr. Said Nour, Dywidag Systems International, USA, Inc.
320 Marmon Drive Bolingbrook, IL 60440

DSI Project: Florida DOT Testing

Client: DSI BOLINGBROOK

Test Witnessed by: Varsha Singh, CTLGroup

Report of Test

On 07/17/2007, a representative of CTL, Skokie, IL was present at the DSI facility in Bolingbrook, IL to witness an internal system pressure test on a 1-3/8" Post-tensioning Bar System assembly as shown in the attached drawing. The test was performed in accordance with Florida Specifications Section 462-4.2.7.3 and FIB Technical Report, Bulletin 7, Chapter 4, Article 4.2, Stages 1 and 2.

Stage 1:

The full scale system was constructed 4.57 meters (15 foot) with no post-tensioning bar installed (See Fig.1). The system was installed as a straight system. The full scale system consisted of the following components (end-to-end): DSI Bar Grout Cap with O-Ring, P/N B36E50700. The grout cap was secured to the anchorage using (4) 3/8"-16UNC 316L SS bolts with Hex Nuts and Washers. The anchorage consisted of a square bearing plate with 5-1/2" long exit pipe welded to the plate, P/N B26E22510. A 59mm GTI PP duct was fitted over the exit pipe, P/N U00220400. Heat Shrink tube, P/N PMA-90/30-150-YE, was used over the pipe-duct overlap to seal for an airtight connection (See Fig.2). A duct coupler, P/N U00220440, was used to splice the duct (See. Fig.3). The same size and type of heat shrink tube was used over the splice. Since the two ends of the actual system are identical, the other end of the duct was sealed with a special closed-end trumpet and heat shrink only to facilitate the test. A calibrated pressure gauge and shut off valve were installed in line through the ¾" NPT half coupler welded on the side of the exit pipe (See Fig.4). The calibration chart is attached herein. The system PASSED the Stage 1 requirements of the Florida Specifications Section 462-4.2.7.3 and FIB Technical Report, Bulletin 7, Chapter 4, Article 4.2, Stages 1.

Stage 2:

The full scale system was pressurized to 1.5 psi with compressed air. The pressure was monitored for five minutes. After the five minutes of holding period, the system showed no pressure loss. Therefore the system PASSED the Stage 2 requirements of the Florida Specifications Section 462-4.2.7.3 and FIB Technical Report, Bulletin 7, Chapter 4, Article 4.2, Stages 2.

Figure 1. Full Scale System

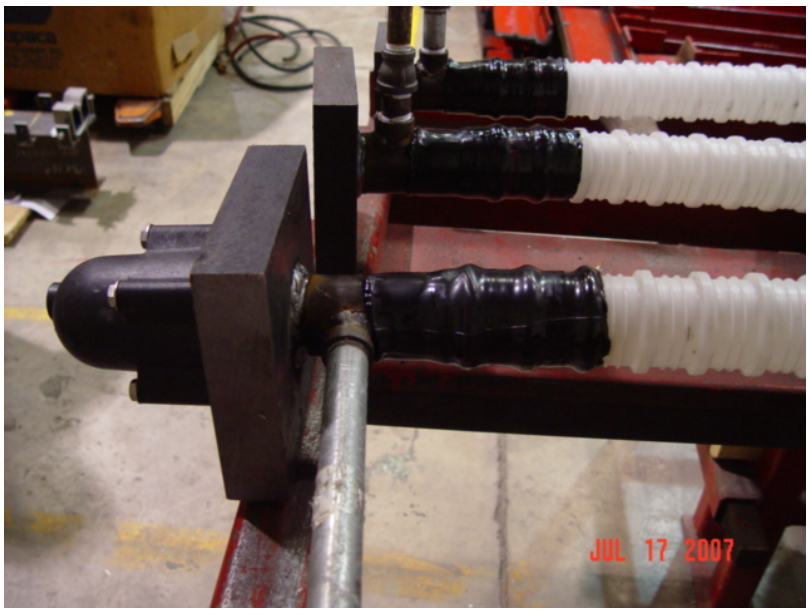

Figure 2. Pipe-Duct overlap Seal

Figure 3. GTI Coupler

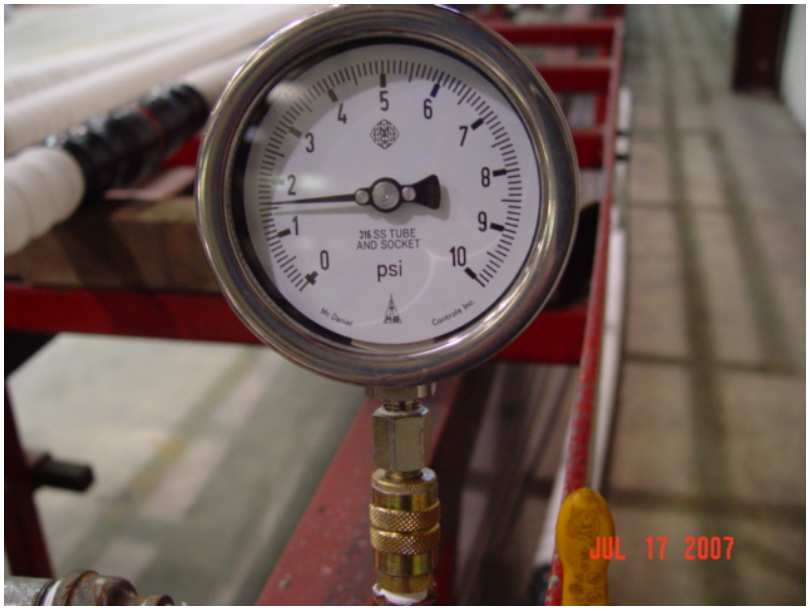

Figure 4. Pressure measurement

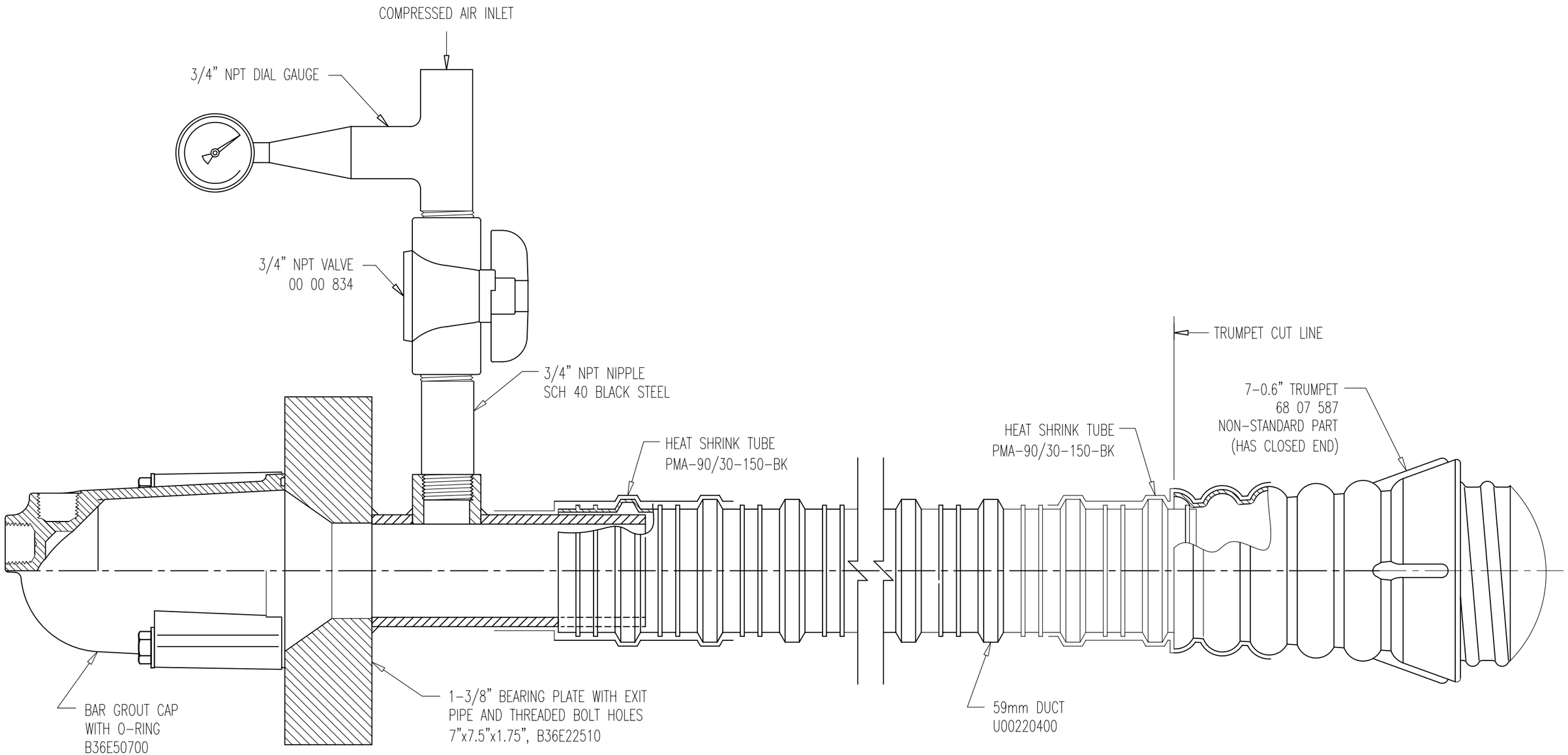

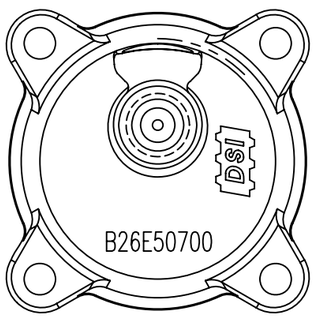

CAP END VIEW

OWNER:	DYWIDAG SYSTEMS INTERNATIONAL, USA INC. DOES NOT ASSUME ANY LIABILITY FOR THE DESIGN OF THIS STRUCTURE. THIS SHOP DRAWING IS INTENDED TO PROVIDE POST TENSIONING DETAILS ONLY.
CONTRACTOR:	
PROJECT:	
1-3/8" PT BAR SYSTEM PRESSURE TEST	
DATE: 07-19-07 DWG: G.M. CHK: S. N. APP: E. A.	

REV.	DATE	ISSUE DESCRIPTION	NAME	CHKD.

JOB NUMBER

SCALE 1:2

DRAWING NUMBER: PT 36E 027

THIS DRAWING, THE PERTINENT ENCLOSURES, DESCRIPTIONS, CALCULATIONS ETC. AND THEIR CONTENTS ARE THE PROPERTY OF **DYWIDAG SYSTEMS INTERNATIONAL, USA, INC.** THEY ARE NOT ALLOWED TO BE DUPLICATED WITHOUT OUR PERMISSION. THEY ARE ALSO NOT TO BE SHOWN OR EXPLAINED FOR ANY REASON TO A THIRD PARTY OTHER THAN FOR REASONS EXPRESSLY INTENDED BY **DSI's** SUBMITTAL TO THE ORIGINAL RECEIVER. THEY HAVE TO BE RETURNED UPON REQUEST.

DYWIDAG-SYSTEMS INTERNATIONAL, USA, INC.
POST TENSIONING / REINFORCING UNIT PHONE: 630-739-1100
320 MARMON DRIVE - BOLINGBROOK, IL FAX: 630-739-6155

JLW Instruments / Metrology Concepts
14 N. Peoria St. Suite: B-101 • Chicago, IL 60607
Ph: 312-666-0595 • Fax: 312-733-0009
www.jlwinstruments.com

2006 - 9511 - 34149

JLW Instruments / Metrology Concepts

CALIBRATION CERTIFICATE AND DATA SHEET

DYWIDAG SYSTEMS INTERNATIONAL, USA, INC.
320 MARMON DRIVE
BOLINGBROOK , IL 60440
DAVID PRASEK

244375	OE19108
P.O.	RMA Number / Quote

PRESSURE GAUGE	*PG-026990*
Description	Serial No.
McDANIEL	*026990* / --
Manufacturer	Control No. / Asset No.
E(0-10 PSI)	
Model Number	Department / Cust Location

Cycle	Cal Date	Cal Due Date
365	*9/8/2006*	*9/8/2007*

Intervals are assigned by contractual agreement unless specifically explained

Environmental Conditions: *68* °F, *54* %RH, *990* mB, ____ Gals

Specs. MFG.
Procedure *ICP-005*

Received	Returned	Special Services	Equipment Accessories
☒ In Tolerance	☒ In Tolerance	☐ Repair	☐ Manual
☐ Out Of Tolerance	☐ Limited Use	☐ On-Site	☐ Adapters
☐ Inoperative	☐ Return As Is	☒ Calibration	☐ Cables
☐ Damaged	☐ Eval Only	☐ Conformance	☐ Power Cord
☐ Parts Missing	☐ NCR	☐ Outside Service	☐ Equip Case
☐ Initial Cal	☐ Adjusted	☐ Warranty Service	☐ Shipping Case
☐ Dirty	☐ Repaired	☐ Estimate Required	☐ Handles
☐ NCR	☐ Cleaned	☐ ISO 17025	☐ Head
☐ Off Zero	☐ Rejected		☐ React. Post
			☐ Ldg. Bar

Fault/Symptom
COMMISSION NEW GAUGE

Technical Evaluation
New instrument, initial calibration and certification required.

Work Performed
Performed initial calibration, meets manufacturers specifications, no adjustments were required.

Qty	Description	Qty	Description

Asset	Asset Model	Due Date	Traceability to NIST Through Report No.
59	*MK-100*	*12/15/2006*	*822/266929-02*

Parameters Tested/ Specification	Nominal	- Limit	+ Limit	As Found	As Left
Pressure ±0.5% Full Scale.					
All Readings In PSI 10 PSI					
Measured Readings	*0*	—	—	*0.00*	
	1	*0.95*	*1.05*	*1.00*	
	2	*1.95*	*2.05*	*2.00*	
	3	*2.95*	*3.05*	*3.00*	
	4	*3.95*	*4.05*	*4.00*	
	5	*4.95*	*5.05*	*5.00*	
	6	*5.95*	*6.05*	*6.00*	
	7	*6.95*	*7.05*	*7.00*	
	8	*7.95*	*8.05*	*8.00*	
	9	*8.95*	*9.05*	*9.00*	
	10	*9.95*	*10.05*	*10.00*	

○ This calibration was performed with equipment controlled in compliance with ISO/IEC 17025 pursuant to A2LA Accreditation Certificate Number 1753.01 and is traceable to N.I.S.T. or fundamental or natural physical constants, or by accepted ratiometric techniques. Mfg. Specs along with measurement uncertainty was used to determine In/Out of tolerance.

◉ This calibration is traceable to N.I.S.T. or fundamental or natural physical constants, or by accepted ratiometric techniques. Mfg. Specs without regard with measurement uncertainty was used to determine In/Out of tolerance.

This Form Is Not To Be Reproduced Without Written Authorization From JLW Instruments / Metrology Concepts.

Troy Jensen TJ
Certified By

Chris Waldron C.W
Inspected By

REPORT OF 1", 1-1/4" and 1-3/8" DSI THREABARS WITH BAR COUPLER FULL SCALE SYSTEM PRESSURE TEST witnessed for Dywidag Systems International USA Inc.

Date of Report: 12/10/2007 CTL Group Project Number: 330110

Date of Test: 12/05/2007

DSI Contact Information: Mr. Said I. Nour
Dywidag Systems International USA Inc.
320 Marmon Drive, Bolingbrook, IL 60400

DSI Project: System 100 for Florida DOT Testing

Client: DSI BOLINGBROOK

Test Witnessed by: Varsha Singh, CTL GROUP

Report of Test

On this date, a representative of CTL was present at the DSI facility in Bolingbrook, IL to witness an internal system pressure test on a full scale Post-tensioning Bar System representing 1", 1-1/4" and 1-3/8" DSI bar assemblies in use for Precast Segmental Construction. The test was performed in accordance with Florida Specifications Section 462-4.2.7.3 and FIB Technical Report, Bulletin 7, Chapter 4, Article 4.2, Stages 1 and 2.

Stage 1:
The full scale system was constructed 5.18 meters (17 foot) with no post-tensioning bar installed (See Dwg No. P36E030). The system was installed as a straight system. The full scale system consisted of the following components (end-to-end): A 59mm GTI PP duct sealed with a plug and heat shrink at one end. The other end of the PP duct is fitted over DSI Coupler Housing, P/N U06008010. Heat Shrink tube, P/N PMA-90/30-150-YE was used over the Duct/Coupler Housing joint to create an airtight connection. Using Loctite, a 21mm Grout Tube, P/N 00 00 801, 21mm Female-3/4" NPT Male Connector, P/N 00 00 845 and 3/4" NPT Valve, P/N 00 00 834 were installed on the Coupler Housing (See Fig.1). The Coupler Housing is spun welded to DSI Plate Connector, P/N B36E52210. The Coupler Housing and Plate Connector formed DSI Plate Coupler Housing, P/N B36E50210. The Plate Connector was secured to the intermediate anchorage using O-Ring and (4) 3/8"-16UNC bolts with Washers. The intermediate anchorage used in this test consisted of a square bearing plate with 5-1/2" long exit pipe welded to the plate, P/N B36E22510. A 59mm GTI PP duct was fitted over the exit pipe, P/N U00220400. Heat

Shrink tube, P/N PMA-90/30-150-YE, was used over the pipe-duct overlap to seal for an airtight connection. A GTI coupler, P/N U00220440, was used to splice the duct. Same size and type of heat shrink tube was used over the splice. Since the two ends of the actual system are identical, the other end of the duct was sealed with a special closed-end trumpet and heat shrink to facilitate the test only. A calibrated pressure gauge and shut off valve were installed in line through the ¾" NPT half coupler welded on the side of the exit pipe (See Fig.2). The pressure gauge calibration chart is attached herein. The ¾" NPT half coupler on the side of the exit pipe may or may not be needed in the actual proposed system but it is used here to facilitate the pressure test air inlet. For this test, the plate, the welded pipe stub (i.e. exit pipe) and the connecting bolts were not galvanized which has no effect on the leak tightness of the system.

Fig.3 shows the overall DSI full scale bar system 100 assembly

The system PASSES the Stage 1 requirements.

Stage 2:

The full scale system was pressured to 1.5 psi with compressed air. The pressure was monitored for five minutes. After the five minutes holding period, the system had no pressure loss.

The system PASSES the Stage 2 requirements.

Note:

The system setup used in this test is similar for all DSI 1", 1-1/4" and 1-3/8" Bar System 100 having an exit pipe (i.e. pipe stub) welded to the bearing plate.
The following DSI Part Numbers are the various anchorages consisting of a square or rectangle bearing plate with a welded pipe stub and are equivalent to the anchorage used in this test. This test is therefore valid for all DSI Bar System 100 using these anchorages.

Anchorages for 1" Bar System: B26E22510, B26E22610, B26E24510 and B26E24610
Anchorages for 1-1/4" Bar System: B32E22510, B32E22610, B32E24510 and B32E24610
Anchorages for 1-3/8" Bar System: B36E22510, B36E22610, B36E24510 and B36E24610

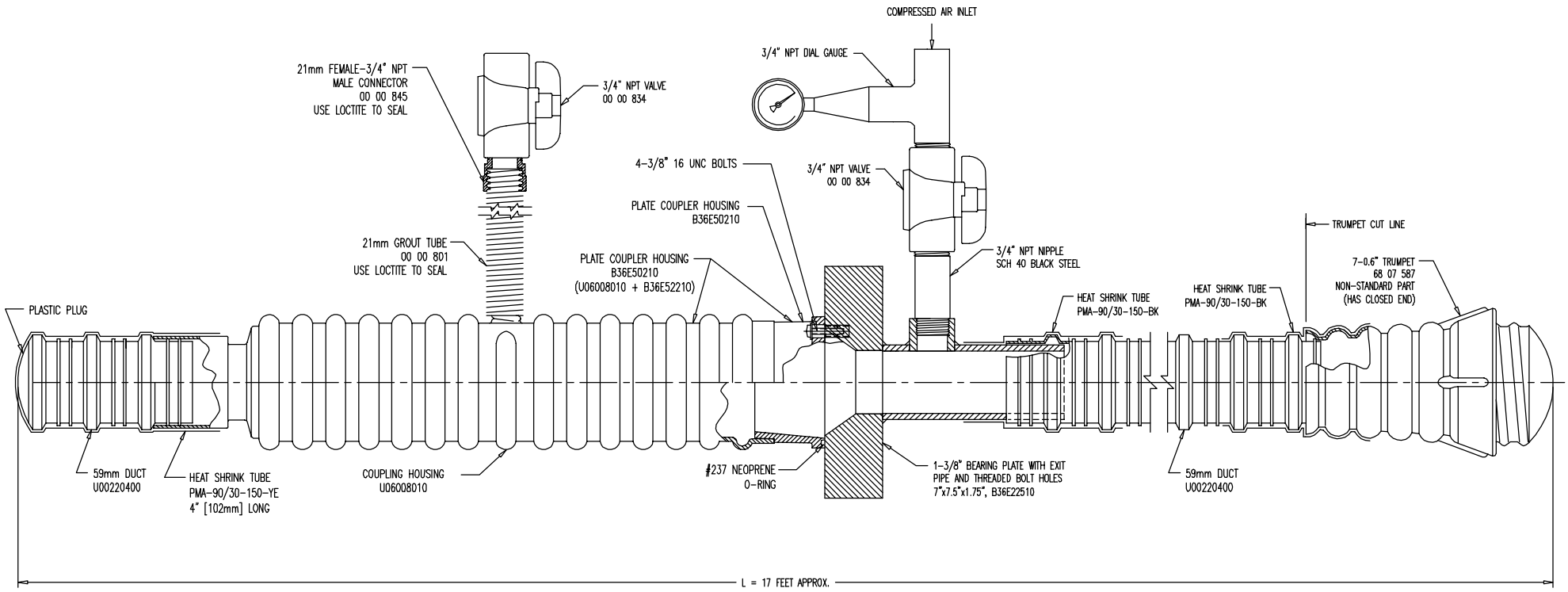

OWNER:

CONTRACTOR:

PROJECT:

1-3/8" PT BAR SYSTEM WITH COUPLING PRESSURE TEST

DATE: 12-05-07	DWG: G.M.	CHK: S. N.	APP: E. A.

THIS DRAWING, THE PERTINENT ENCLOSURES, DESCRIPTIONS, CALCULATIONS ETC. AND THEIR CONTENTS ARE THE PROPERTY OF DYWIDAG SYSTEMS INTERNATIONAL, USA, INC. THEY ARE NOT ALLOWED TO BE DUPLICATED WITHOUT OUR PERMISSION. THEY ARE ALSO NOT TO BE SHOWN OR EXPLAINED FOR ANY REASON TO A THIRD PARTY OTHER THAN FOR REASONS EXPRESSLY INTENDED BY DSI's SUBMITTAL TO THE ORIGINAL RECEIVER. THEY HAVE TO BE RETURNED UPON REQUEST.

DYWIDAG SYSTEMS INTERNATIONAL, USA INC. DOES NOT ASSUME ANY LIABILITY FOR THE DESIGN OF THIS STRUCTURE. THIS SHOP DRAWING IS INTENDED TO PROVIDE POST TENSIONING DETAILS ONLY.

REV.	DATE	ISSUE DESCRIPTION	NAME	CHKD.

JOB NUMBER

SCALE 1:3

DRAWING NUMBER: PT 36E 030

DYWIDAG-SYSTEMS INTERNATIONAL, USA, INC.
POST TENSIONING / REINFORCING UNIT PHONE: 630-739-1100
320 MARMON DRIVE - BOLINGBROOK, IL FAX: 630-739-6155

Fig.1: Plate Coupler Housing for Segmental Construction

Fig.2: Calibrated Gauge for Monitoring Pressure Loss

Fig.3: DSI Bar System 100 Full Scale Pressure Test Setup

JLW Instruments / Metrology Concepts
14 N. Peoria St. • Chicago, IL 60607
Ph: 312-666-0595 • Fax: 312-733-0009
www.jlwinstruments.com

2007 - 9511 - 41125

JLW Instruments / Metrology Concepts

ACCREDITED
CERT. NO. 1753.01

CALIBRATION CERTIFICATE AND DATA SHEET

DYWIDAG SYSTEMS INTERNATIONAL, USA, INC.
320 MARMON DRIVE
BOLINGBROOK , IL 60440
MARK CWIERTNIAK 1 630 972 4059

281610 — P.O.
R2890-1 — RMA Number
Quote

Environmental Conditions: 71.8 °F, 21.9 %RH, 1003 mB, Gals
Specs. / Procedure: MFR. / ICP-005

Pressure Gauge — Description
PG-026990 — Serial No.
McDANIEL — Manufacturer
026990 — Control No.
-- — Asset No.
E (10) — Model Number
Department
Cust Location

Cycle	Cal Date	Cal Due Date
366	11/30/2007	11/30/2008

Intervals are assigned by contractual agreement unless specifically explained

Received: ☒ In Tolerance ☐ Out Of Tolerance ☐ Inoperative ☐ Damaged ☐ Parts Missing ☐ Initial Cal ☐ Dirty ☐ NCR ☐ Off Zero

Returned: ☒ In Tolerance ☐ Limited Use ☐ Return As Is ☐ Eval Only ☐ NCR ☐ Adjusted ☐ Repaired ☐ Cleaned ☐ Rejected

Special Services: ☐ Repair ☐ On-Site ☒ Calibration ☐ Conformance ☐ Outside Service ☐ Warranty Service ☐ Estimate Required ☐ ISO 17025

Equipment Accessories: ☐ Manual ☐ Adapters ☐ Cables ☐ Power Cord ☐ Equip Case ☐ Shipping Case ☐ Handles ☐ Head ☐ React. Post ☐ Ldg. Bar

Fault/Symptom
CALIBRATION (INCLUDES CERTIFICATE)

Technical Evaluation
Meets manufacturers specifications as received. Uncertainty of measurement is 0.0313 psi.

Work Performed
Verified to manufacturers specifications. No adjustments were performed. As Left data is same as As Found data.

Qty.	Description	Qty.	Description

Asset	Asset Model	Due Date	Traceability to NIST Through Report No.
000059	MK-100	4/30/2008	2007-0261-36002

Parameters Tested/ Specification	Nominal	- Limit	+ Limit	As Found	As Left
Pressure ±0.5% Full Scale					
All Readings In PSI. 10 PSI.					
Measured Readings	0	--------	--------	0.00	0.00
	2	1.95	2.05	2.00	2.00
	4	3.95	4.05	4.00	4.00
	6	5.95	6.05	6.00	6.00
	8	7.95	8.05	8.00	8.00
	10	9.95	10.05	10.00	10.00

This calibration was performed with equipment controlled in compliance with ISO/IEC 17025, pursuant to A2LA Accreditation Certificate #1753.01, and is traceable to N.I.S.T. The reported expanded uncertainty is based on a standard uncertainty multiplied by a coverage factor k=2, providing a level of confidence of approximately 95%.

This Form is Not To Be Reproduced Without Written Authorization From JLW Instruments / Metrology Concepts.

Troy Jensen — Certified By
Mark Cunney — Inspected By

American Association of State Highway and Transportation Officials

AASHTO Accreditation Program - Certificate of Accreditation

This is to signify that

Construction Technology Laboratories, Inc.

Skokie, Illinois

has demonstrated proficiency for the testing of construction materials
and has met the minimum requirements in AASHTO R18
set forth by the AASHTO Highway Subcommittee on Materials.

The scope of accreditation can be obtained by viewing
the AAP Directories of Accredited Laboratories (www.nist.gov/amr)
or by contacting AMRL.

Executive Director

Chair, AASHTO Highway
Subcommittee on Materials

AAP
AASHTO R18

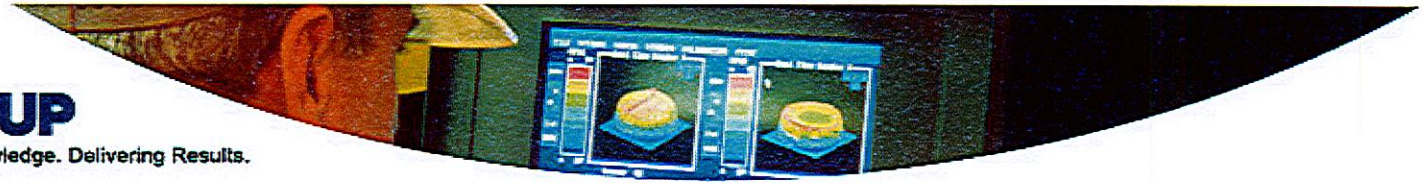

CTLGROUP
Building Knowledge. Delivering Results.

Welcome, Ken

Print Inquire 847-972-3098

Entire Site: SEARCH FOR

Idioma Español

Recently-Viewed Topics:

- **Accreditations / Affiliations**

Accreditations / Affiliations

Accreditations

CTLGroup is a nationally accredited, independent engineering and testing firm that participates in a variety of laboratory certification, inspection, and monitoring programs. CTLGroup's quality program meets the ISO/IEC Guide 17025 standards (equivalent to the relevant requirements of ISO 9000 and QS9000 series standards). Accreditations, certifications, and laboratory approvals include:

- IAS Certification
- Miami Dade County Certified Testing Laboratory
- Association of American Railroads approved test facility
- CCRL - CTLGroup has participated in the Cement and Concrete Proficiency Sample Program since its inception for portland cement, blended portland cement, masonry cement, pozzolan, masonry brick, and concrete. CCRL inspects CTLGroup's laboratories once every two years.
- ACI - All CTLGroup physical testing technician personnel have been certified by the American Concrete Institute as ACI Level I Concrete Field Technicians.
- AASHTO - CTLGroup has been accredited by the American Association of State Highway and Transportation Officials for the testing of fine and coarse aggregates, portland cement concrete, and hydraulic cement (chemical and physical tests).
- DOE - CTLGroup has been audited by the nuclear industry and the Department of Energy for use as a commercial laboratory. Work for the DOE has been performed under a direct surveillance program.
- U.S. Army Corps of Engineers - CTLGroup has received validation from the Army Corps of Engineers to perform material tests on aggregates, concrete, masonry, mortar, cement, pozzolan, and grout.

Affiliations

CTLGroup and its employees actively participate in a wide range of professional and technical organizations, including:

- Post-Tensioning Institute Consultant Member (PTI)
- American Concrete Institute (ACI)
- ASTM International
- The Masonry Society (TMS)
- Precast/Prestressed Concrete Institute (PCI)
- American Segmental Bridge Institute (ASBI)
- International Concrete Repair Institute (ICRI)
- Construction Specifications Institute (CSI)
- Association of American Railroads (AAR)
- American Association of State Highway and Transportation Officials (AASHTO)
- Transportation Research Board (TRB)
- American Society of Civil Engineers (ASCE)
- BOMA International
- Society for Protective Coatings (SSPC)
- U.S. Green Building Council

RESOURCES:

IAS Certificate 2006
(Download PDF - 256 KB)

U.S. Army Corps of Engineers Lab Validation
(Download PDF - 578 KB)

AASHTO Certificate
(Download PDF - 64 KB)

View other topics in **Company Profile**

© 2006 CTLGroup. All Rights Reserved | Privacy Statement.

1 7/8 COUPLER NEEDS TO SEE 100% OF BAR ULTIMATE LOAD = 237 KIPS
COUPLERS SAW MORE THAN 250 KIPS

A2

RECEIVED
JAN 31 1990
USL, USA, INC. - LEMONT

PACKER ENGINEERING INC.

DATE 24JAN90

FOR DYWIDAG

SYSTEM INTERNATIONAL

MACHINE USED 400K BTE

TESTED BY D.DYL.

WITNESS

FILE REF. N 50424

REPORT OF TESTS

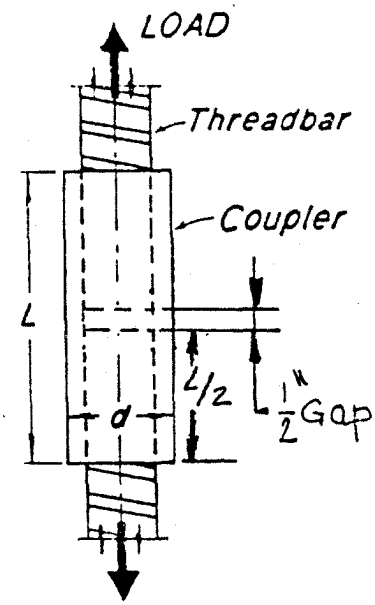

THREADBAR COUPLER TEST

TESTED IN TENSION TO FAILURE
AS SHOWN UNLESS OTHERWISE NOTED.
YIELD POINT WAS DETERMINED BY
THE "HALT OF THE POINTER" METHOD.

BAR CROSS-SECTIONAL AREA
TAKEN FROM ASTM A-615 -

Specimen No.	1	2	3
Bar Size	1 3/8.	1 3/8	
Coupler Dim			
d, in.	2.745	2.744	2.745
L, in.	8.750.	8.750	8.750
Yield Load, lb	197700/221800.	194800/22200	221100
Max Load, lb	252300	252900	253300
Yield Point, psi	126730/142180	124872/162115.	141730.
Ult. Str., psi	161730.	162115.	162372.
Failure	BAR	BAR	BAR.
BAR SPEC. TOP/BOT.	1/4	2/5.	6/3.

ORIGINAL

NORTH WASHINGTON AT I-88
P.O. BOX 353 • NAPERVILLE, ILLINOIS 60566
312·355·5722 • FAX 312·355·1964

OUR PHONE NUMBERS
HAVE CHANGED TO:
708·505·5722 • FAX 708·505·1986

DYWIDAG SYSTEMS INT *USA INC.* *DSI*

BAR PRODUCT TEST PLAN

Plan No.

(Results)

Test Title: 36mm Bar/Coupler Static Load **Page of**

Project:	**Ref. No.**	**Tested By:** M Emerson	**Date:** 11-30-2007

Purpose of Test: Routine.
To determine if the threads on the bar/coupler can hold the nominal full load of the 36mm bar.

Test Location: Gerdau-Ameristeel St Paul MN

	Part No.	**Heat/Roll Lot No.**	**Material**
Tested Hardware:	B36E30810	n/a	C1117
Tested Bar:	B36E	M073741 / M639310	ASTM A 722 Gr150

Dimensions:	**Specified (See Dwg)**		**As Measured**		
For Hardware:	**From**	**To**	**Sample 1**	**Sample**	**Sample**
Length (in)	8.687	8.813	ok		
Outside Dim. (in)	2.746	2.75	ok		
ID (in)	1.429	1.433	ok		
For Bar:	**From**	**To**	**Sample 1A & 1B**	**Sample**	**Sample**
Major Dia (in) @ center	1.587	1.63	1.608		
Minor Dia (in) @ center	1.406	1.425	1.410		
Flat (in)	1.378	1.425	1.381		
Test Results:					
Yield Load (kips)	189.6		231.9		
Ult. Load (kips)	237.0		262.0		
Failure Mode: A) Bar Break B) Bar Thread C) Hardware Break D) Hardware Thread			A) Bar broke outside of coupler.		

Setup:

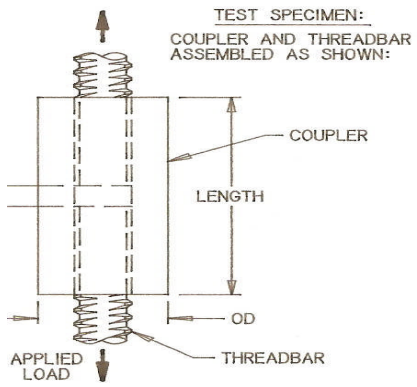

DSI

POST-TENSIONING BARS

SYSTEM 100

MISCELLANEOUS ITEMS & MATERIAL DATA SHEETS

CAPTOP CAPS · PLUGS · COMPONENTS

Threaded Sealing Plugs, PA 6, yellow

Suitable for internal threads according to DIN 3852, ISO 6149, SAE J 1926 with recessed Flange

NEXT Express Service MORNING

STANDARD RANGE

EP 435

Type »A« Type »B«

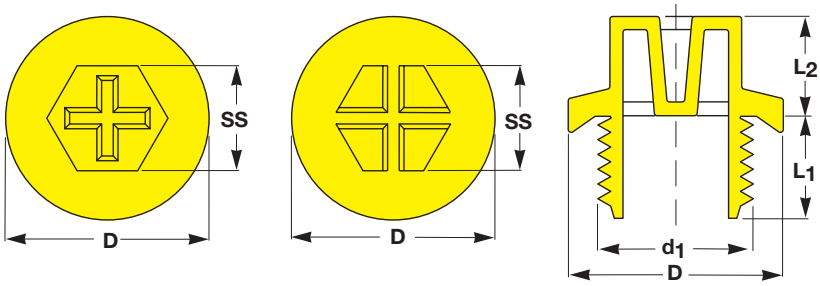

BSP

All dimensions in mm

	Thread Size	Flange	Total height		Spanner Size	Reference No.	Type
			Thread Length	Head Length			
	d_1	D	L_1	L_2	SS		
NEW	G 1/8"	16.8	9.0	10.0	13.0	EP 435 – 1/8"	A
	G 1/4"	19.2	9.0	10.0	13.0	EP 435 – 1/4"	A
	G 3/8"	22.2	9.0	11.0	17.0	EP 435 – 3/8"	A
	G 1/2"	27.2	12.0	13.0	19.0	EP 435 – 1/2"	A
	G 3/4"	32.3	12.0	13.0	24.0	EP 435 – 3/4"	A
	G 1."	40.0	15.0	14.0	27.0	EP 435 – 1."	B
	G 1.1/4"	50.4	15.0	15.0	36.0	EP 435 – 1.1/4"	B
	G 1.1/2"	55.4	15.0	15.0	41.0	EP 435 – 1.1/2"	B
	G 2."	68.4	15.0	15.0	55.0	EP 435 – 2."	B

Metric

	M 10 x 1	14.2	7.0	10.0	10.0	EP 435 – M 10 x 1	A
	M 12 x 1.5	17.2	10.0	10.0	13.0	EP 435 – M 12 x 1.5	A
	M 14 x 1.5	19.2	10.0	10.0	13.0	EP 435 – M 14 x 1.5	A
	M 16 x 1.5	22.0	10.0	10.0	17.0	EP 435 – M 16 x 1.5	A
	M 18 x 1.5	24.0	10.0	11.0	17.0	EP 435 – M 18 x 1.5	A
	M 20 x 1.5	26.0	10.0	14.0	19.0	EP 435 – M 20 x 1.5	A
	M 22 x 1.5	27.2	10.0	14.0	19.0	EP 435 – M 22 x 1.5	A
NEW	M 24 x 1.5	31.5	12.0	14.0	24.0	EP 435 – M 24 x 1.5	A
	M 26 x 1.5	32.0	10.0	14.0	24.0	EP 435 – M 26 x 1.5	A
	M 27 x 2	32.3	13.0	14.0	24.0	EP 435 – M 27 x 2	A
	M 33 x 2	40.4	13.0	14.0	27.0	EP 435 – M 33 x 2	B
	M 42 x 2	50.0	13.0	15.0	36.0	EP 435 – M 42 x 2	B

UNF / UN

NEW	.7/16" – 20 UNF	20.8	11.0	9.0	13.0	EP 435 – .7/16" – 20 UNF	A
NEW	.1/ 2" – 20 UNF	22.8	11.0	10.0	13.0	EP 435 – .1/ 2" – 20 UNF	A
NEW	.9/16" – 18 UNF	24.8	11.0	10.0	13.0	EP 435 – .9/16" – 18 UNF	A
NEW	.5/ 8" – 18 UNF	24.8	12.0	12.0	17.0	EP 435 – .5/ 8" – 18 UNF	A
	.3/ 4" – 16 UNF	26.0	10.0	13.0	17.0	EP 435 – .3/ 4" – 16 UNF	A
NEW	.7/ 8" – 14 UNF	33.8	14.0	12.0	19.0	EP 435 – .7/ 8" – 14 UNF	A
NEW	1.1/16" – 12 UN	40.8	14.0	12.0	24.0	EP 435 – 1.1/16" – 12 UN	A
	1.5/16" – 12 UN	42.0	15.0	15.0	27.0	EP 435 – 1.5/16" – 12 UN	A
NEW	1.5/ 8" – 12 UN	57.8	17.0	15.0	36.0	EP 435 – 1.5/ 8" – 12 UN	A
	1.5/ 8" – 16 UN	57.8	17.0	15.0	36.0	EP 435 – 1.5/ 8" – 16 UN	A

Should your requirements not be shown please ask for separate quotation. PROTEC products and specifications are subject to improvement and change without notice.

Fax (0191) 442 4222

Threaded Sealing Plugs, PA 6, yellow

Suitable for internal threads according to DIN 3852, ISO 6149, SAE J 1926 with recessed Flange

DELIVERY 24 hrs. SERVICE

STANDARD RANGE
EP 435

- Nylon 6 is used for its stability to withstand temperatures of up to 150 °C and pressures up to 10 bar (during painting processing and testing).
- 5 complete threads for optimum use.
- The hexagon head allows tightening and removal with either a screwdriver or a spanner or special tool.
- Guaranted seal.
- Nylon 6 guarantees a very high resistance against hydraulic fluids, acids, base alkalines and Solvents.
- Extremely economical when compared to metal.

Type «B»

NEW UN / UNF

Type «A»

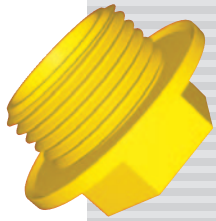

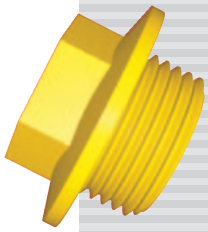

Materials : nylon (PA 6)
Colours : yellow

NIAGARA® PLASTICS

threaded (bsp) sealing plugs - bt series

Niagara Plastics • 7090 Edinboro Road • Erie, PA, USA 16509-4497
Phone: 1-800-458-0465 or 1-814-868-3671 • Fax: 1-800-358-4391 or 1-814-864-2423 • e-mail: plastics@niagaraplastics.com

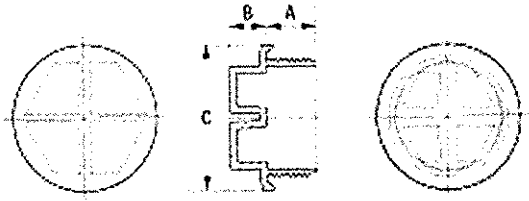

1 2 3 4 5 6 7 8 9 10

scroll over numbers to rotate part

threaded (bsp) sealing plugs

BT series

Designed to protect British Standard Pipe fittings. Plug is engineered with five complete threads to provide an absolute tight fit. The "sealing lip" enables each plug to provide a perfect seal. The BT Series can be applied or removed with a screwdriver, socket wrench, power tool or by hand. Will withstand pressure up to 10 psi and intermittent temperatures up to 170°C or approximately 300°F.

specifications:

- Material: Nylon 6
- Color: Yellow

		Dimensions						Standard Package		Red-E-Pak	
		A		B		C					
Part No.	To Plug Thread Size	in	mm	in	mm	in	mm	Pieces	Lbs.	Pieces	Lbs.
BT 0250	G 1/4	.35	8.89	.39	9.91	.76	19.30	7000	34	1400	7
BT 0375	G 3/8	.35	8.89	.43	10.92	.87	22.10	4000	31	800	6
BT 0500	G 1/2	.47	11.94	.51	12.95	1.07	27.18	2500	29	500	6
* BT 0750	G 3/4	.47	11.94	.51	12.95	1.27	32.26	1600	26	320	5
BT 1000	G 1	.59	14.99	.55	13.97	1.57	39.88	900	20	180	4
BT 1250	G 1-1/4	.59	14.99	.59	14.99	1.98	50.29	550	19	110	4

BT 1500	G 1-1/2	.59	14.99	.59	14.99	2.18	55.37	450	19	90	4
BT 2000	G 2	.59	14.99	.59	14.99	2.69	68.33	250	17	50	4

Note: If carton information is not listed, call Niagara.

QS 9000 – ISO 9001 CERTIFIED

Copyright © 2002 Niagara Plastics Company

Niagara Plastics • 7090 Edinboro Road • Erie, PA, USA 16509-4497
Phone: 1-800-458-0465 or 1-814-868-3671 • Fax: 1-800-358-4391 or 1-814-864-2423 • e-mail: plastics@niagaraplastics.com

Tolerances

- Tolerances on all **decimal** dimensions ± .010 per inch.

  Example: 1.000 ± .010 = .010"
  2.500 ± .010 per inch - .025"

- Tolerance for **fractional** dimensions ± 1/32" per inch.

- Tolerances for **nylon** fasteners:
  Any tolerances that are not specified in the catalog are +.010, -.015".

- Tolerances on all **metric** decimal dimensions ± .25mm per 25mm

  Example: 25 ± .25 per 25mm = ± .25mm
  60 ± .25mm = ±.60mm

- Tolerances on **vinyl**

  Example: wall ± .010 of spec
  length ± 0.40 of spec

NIAGARA® Caps & Plugs

material properties

	Polyethylene							Vinyl	
Properties	Low Density	Medium Density	High Density	Polypropylene	Ethylene Vinyl Acetate	Nylon	Thermoplastic Rubber	Standard	High Temp.
Specific Gravity	0.910-0.925	0.926-0.940	0.941-0.965	0.902-0.906	.931-.933	1.13-1.15	0.94	0.98-2.0	1.22-1.32
Tensile Strength P.S.I.	600-2300	1200-3500	3100-5500	4300-5500	1700-2000	900-12000	2750	50-5000	2175min
Elongation%	90-800	50-600	15-100	200-700	700-800	60-300	600	50-550	175mmin
Compressive Strength P.S.I.	—	—	3200	5500-8000	—	6700-12500	—	—	—
Flexural Strength P.S.I.	—	4800-7000	1000	6000-8000	—	No Break	—	—	—
Specific Heat Cal/C/gm	0.55	0.55	0.55	0.46	0.55	0.04	—	—	—
Resistance to Heat °F	180-200	220-250	250	250-320	160-185	180-300	300	300-325	450
Heat Distortion Temperature °F	100-121 (66 P.S.I.)	120-165 (66 P.S.I.)	140-180 (66 P.S.I.)	205-230 (66 P.S.I.)	95-105	360-365	—	—	—
Water Absorption %24 hr. 1/8" Thickness	<0.01	0.01	0.01	0.01	.005-0.13	—	—	—	—
Effect of Sunlight	**see below	**see below	**see below	Crazes Rapidly	**see below	Discolors Slightly	Excellent Ozone Resistance	Excellent Ozone Resistance	Good Ozone Resistance
Effect of Weak Acids	Resistant	Very Resistant	Very Resistant	None	Resistant	Resistant	Resistant	Resistant	Resistant
Effect of Strong Acids	Attacked by Oxidizing Acid	Attacked by Slowly Oxidizing Acids	Attacked by Slowly Oxidizing Acids	Attacked by Oxidizing Acids	Attacked by Oxidizing Acids	Attacked	Resistant	Fair Resistance	Fair Resistance
Effect of Weak Alkalies	Resistant	Very Resistant	Very Resistant	None	Resistant	None	Resistant	Resistant	Fair
Effect of Strong Alkalies	Resistant	Very Resistant	Very Resistant	Very Resistant	Resistant	None	Resistant	Fair Resistance	Poor
Effect of Organic Solvents	Resistant Below 60°C	Resistant Below 60°C	Resistant Below 80°C	Resistant Below 80°C	Resistant Below 50°C	Resists Most	Resistant	Fair Resistance	Poor
Effect of Oils and Greases	Attacked by Some	Attacked by Some	Slight	Attacked by Some	Attacked by Some	None	Somewhat Resistant*	Fair Resistance	Poor
Impact Strength ft./lb./ In. Notch	No Break	0.5-16	1.5-20	0.4	No Break	1.0-5.5	No Break	—	—

ASTM test methods apply. Niagara cannot be held responsible for accuracy of these figures.

* Hydrocarbons will cause thermoplastic rubber to swell if soaked; it will not affect the properties.

MATERIALS

Materials Properties Chart

Material	Temperature Resistance		resistant against								non resistant against					trans-parency			
	intermittent	continous	non oxidising acids	non oxidising alkalis	alcohol	solvents	fuels	oils	greases	weak acids	oxigising agents	chlorohydrocarbons	solvents	benzol	acids	translucid	transparent	opaque	translucent
LD-PE	60	40	●	●	●	●	●	●	●	●	●	●				●	●	●	
HD-PE	100	80	●	●	●	●	●	●	●	●	●	●				●	●	●	
LLD-PE	90	70	●	●	●	●	●	●	●	●	●	●				●	●	●	
PHT	150	120			●		●	●	●	●								●	
TPE	150	120	●	●	●	●		●	●									●	
Posicon	250	170						●				●					●		
PP	130	100	●	●	●	●	●	●	●	●	●	●						●	
PS	80	60	●	●	●			●	●		●		●	●			●		
SB	80	60	●	●	●			●	●		●		●	●				●	
PA 6	150	90		●		●	●	●	●						●			●	●

CAPTOP®, DURASAFE® and QUICKFIT® Plastic Parts are predominantly manufactured from polyethylene (LD-PE, HD-PE), polypropylene (PP) and nylon (PA6). This involves the use of carbon and hydrogen. These plastic parts are completely recyclable. Please refer to the individual product descriptions in this catalogue for further properties. For special requirements of a mechanical, thermal or chemical nature, we can also manufacture in a wide choice of other materials. Please contact us with further details of your specific needs.

Standard Colour Options

Colour	Remark	Colour code
sulphur yellow	Colour to DIN 4818 Standard	RAL 1016
orange	Colour to DIN 4818 Standard	RAL 2004
red	Colour to DIN 4818 Standard	RAL 3000
blue	Colour to DIN 4818 Standard	RAL 5012
green	Colour to DIN 4818 Standard	RAL 6001
dark grey	Colour to DIN 4818 Standard	RAL 7001
light grey	Colour to DIN 4818 Standard	RAL 7035
brown	Colour to DIN 4818 Standard	RAL 8007
white	Colour to DIN 4818 Standard	RAL 9010
black	Colour to DIN 4818 Standard	RAL 9005

CAPTOP®, DURASAFE® and QUICKFIT® Plastic Parts are manufactured in a range of standard colours corresponding to the individual product descriptions in this catalogue. In addition, further colours are available for special production runs at an additional cost. Variations in standard colours may occur occasionally. This is unavoidable due to differences in both pigments and raw plastic material properties. For additional colours, please contact us with your specific needs.

General Tolerances

The table values indicated above are theoretical averages which may vary with tolerances in the production process in accordance with DIN 16901.
General dimensional tolerances are: +/- 2% and do not exceed +/- 1.0mm.

The Professional's Choice

King Bros. Industries
29101 The Old Road, Valencia, CA 91355
Toll Free: (800) 325-9468 Fax: (661) 257-4320
E-mail: valves@kbico.com Web: www.kbico.com

Attn: Said Nour

PVC Schedule 40 Economy Ball Valves

Features:

- EPDM O'rings.
- Viton O'rings available.
- Meets/Exceeds ASTM schedule 40 socket and material standards.
- Made of High-Impact PVC Type II material.
- Molded in the **USA** by KBI.
- 150 psi working pressure (tested to 500 psi static @ 72°F) Nominal operating pressure.
- NSF Standard listed.

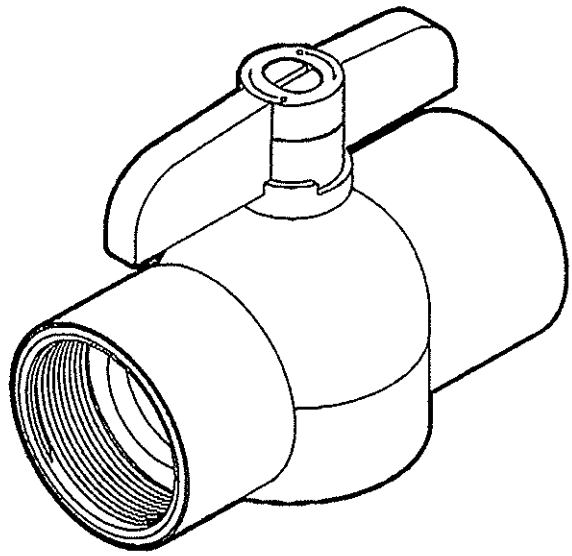

Models		Size	A	L	H	W	Case	Weight	List
Socket	Thread								
EBV-0500-S	EBV-0500-T	1/2"	2.3"	2.7"	2..1"	1.2"	36	5.2	$ 3.70
EBV-0750-S	EBV-0750-T	3/4"	2.6"	3.1"	2.4"	1.4"	24	5.4	$ 4.40
EBV-1000-S	EBV-1000-T	1"	3.2"	3.5"	2.7"	1.7"	18	6.2	$ 6.00
EBV-1250-S	EBV-1250-T	1 1/4"	4.2"	4.9"	4.0"	2.0"	6	4.2	$ 8.00
EBV-1500-S	EBV-1500-T	1 1/2"	4.2"	5.2"	4.0"	2.5"	6	4.4	$12.00
EBV-2000-S	EBV-2000-T	2"	5.2"	6.0"	5.0"	2.7"	6	7.6	$15.40

FEATURES COMMON TO KBI PVC PRODUCTS

- NSF listed *
- IAPMO (UPC) listed *
- Molded in the USA by KBI
- Limited LIFETIME Warranty
- 150 psi working pressure (tested to 500 psi static @ 72°F)
- Meets/Exceeds ASTM Standards
- Made with Hi-Impact PVC Type II Cell Class 15344-C

* See individual products for details

CanusaTube™ - PLA

Tubular sleeve for pipeline corrosion protection

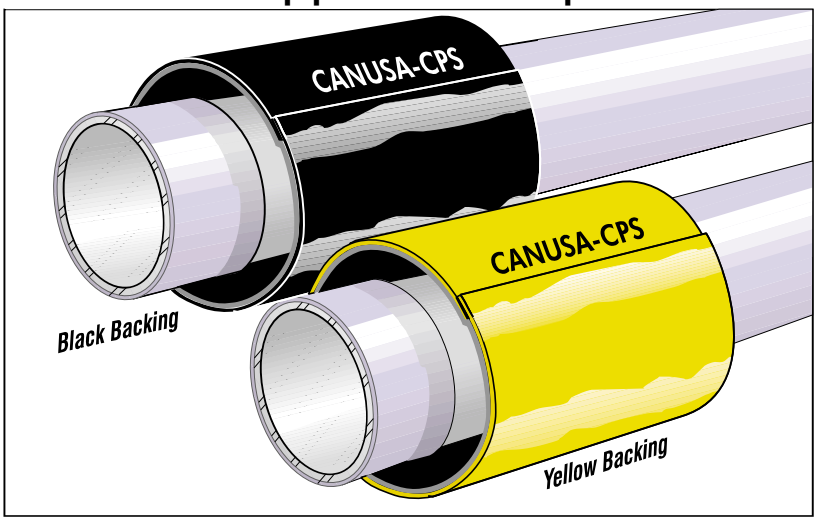

Canusa-CPS is a leading manufacturer of specialty pipeline coatings which, for over 30 years, have been used for sealing and corrosion protection of pipeline joints and other substrates. Canusa high performance products are manufactured to the highest quality standards and are available in a number of configurations to accommodate your specific project applications.

Product Description

The CanusaTube™ is a heat shrinkable tubular sleeve designed for corrosion protection of buried and exposed steel pipelines. CanusaTube™ consists of a crosslinked polyolefin backing, coated with a protective heat sensitive adhesive which effectively bonds to steel substrates and common pipeline coatings including polyethylene and fusion bonded epoxy.

Features & Benefits

Rapid & Reliable Installation

Because CanusaTube™ consists of a unique tubular configuration that has been factory constructed, quick and reliable field installation is easy to accomplish. CanusaTube™ is available with a specially formulated adhesive to accommodate demanding operating temperatures and soil stress conditions. To further optimize installation, CanusaTube™ is available in yellow which includes a thermochromic indicator to visually confirm proper installation.

Long Term Corrosion Protection

CanusaTube™ provides excellent resistance to cathodic disbondment resulting in effective long term corrosion protection. The high performance crosslinked backing in combination with the specially formulated adhesive is engineered to have excellent resistance against temperature cycling, and chemical and environmental attack.

Saves Time & Money

With CanusaTube's™ unique construction, less time is required handling, positioning and installing separate closures. With the application of heat, this feature allows for fast, simple and complete installation of the sleeve. No additional costly primers are required. This minimizes installation time and labour costs while promoting high production rates. CanusaTube™ is also available in a high shrink ratio for high profile joint protection. Consult the High Shrink data sheet for additional information.

Applications

- Oil & Gas
- Girth-Weld Joints
- Water Pipelines
- Pre-Insulated Pipes

Configurations

- CanusaTube™
- 2-Layer
- Standard Shrink

Pipe Sizes

55 - 315 *(2″ - 12″)*

Temperature Range

up to 55°C *(131°F)*

Approvals

DIN 30672

Product Selection Guide

Choose your sleeve based on your Pipe Diameter

Shrink Range	Nominal Pipe Diameter DN (inches)	Outside Pipe Diameter mm (inches)	Tubular Sleeve PLA XXX-YYY ZZ	Tubular Sleeve Diameter As Supplied mm (in)	Tubular Sleeve Diameter Fully Recovered mm (in)
	50 (2)	61 (2.4)	PLA 55-YYY ZZ	90 (3.5)	55 (2.3)
	65 (2.5)	76 (3)	PLA 63-YYY ZZ	90 (3.5)	63 (2.5)
	80 (3)	89 (3.5)	PLA 90-YYY ZZ	120 (4.8)	81 (3.3)
	90 (3.5)	102 (4)	PLA 100-YYY ZZ	130 (5)	90 (3.5)
	100 (4)	114 (4.5)	PLA 115-YYY ZZ	145 (5.5)	98 (3.8)
	125 (5)	141 (5.5)	PLA 125-YYY ZZ	160 (6.3)	110 (4.3)
	150 (6)	168 (6.6)	PLA 170-YYY ZZ	205 (8)	140 (5.5)
	200 (8)	219 (8.6)	PLA 230-YYY ZZ	260 (10)	180 (7)
	250 (10)	273 (10.7)	PLA 280-YYY ZZ	315 (12.3)	211 (8.3)
	300 (12)	324 (12.8)	PLA 315-YYY ZZ	360 (14)	245 (9.5)

For pipe diameters > DN300 (12"), consult your Canusa representative.

Operating Characteristics

Sleeve Operating Characteristics

Pipeline Operating Temperature

Celsius	Fahrenheit
70°	158°
60°	140°
50°	120°
40°	104°
30°	85°

	Hot Melt PLA
Minimum Installation Temp. °C (°F)	60 (140)
Resistance to Circumferential Forces	very good
Resistance to Soil Stress	very good
Resistance to Axial Pipe Movement	very good
Main Line Coating Compatibility	PU, PE, FBE, PP

Typical Product Properties

		Test Standard	Unit	PLA
Adhesive	Softening Point	ASTM E28	°C (°F)	72 (162)
	Lap Shear	DIN 30 672	N/cm² (psi)	60 (87)
Backing	Specific Gravity	ASTM D792		0.93
	Tensile Strength	ASTM D638	MPa (psi)	20 (2900)
	Elongation	ASTM D638	%	600
	Hardness	ASTM D2240	Shore D	46
	Abrasion Resistance	ASTM D1044	mg	45
	Volume Resistivity	ASTM D257	ohm-cm	10^{17}
	Dielectric Voltage Brkdwn.	ASTM D149	kV/mm	20
Sleeve	Impact	DIN 30 672	class B	pass
	Indentation	DIN 30 672	class B	pass
	Peel	ASTM D1000	N/cm (pli)	50 (29)
	Peel	DIN 30 672	N/cm (pli)	35 (20)
	Cathodic Disbondment	ASTM G8	mm rad	13
	Water Absorption	ASTM D570	%	0.05
	Low Temp. Flexibility	ASTM D2671-C	°C (°F)	-32 (-26)
	DIN Approval	DIN 30 672	class	B50
	Fully Recovered Thickness		mm (mils)	2.3 (92)

How To Order:

Dimensions & Ordering Info

PLA 115-450 YE

	Standard Ordering Options
Colour	**YE** - Yellow, **BK** - Black
Sleeve Width	**300mm, 450mm, 600mm, 900mm (12", 18", 24", 36")**
Pipe Size	**55mm - 315mm (2" - 12")**
Adhesive (thickness as supplied)	**A - 0.75 mm (30 mils)**
Backing (thickness as supplied)	**L - 0.80 mm (31 mils)**
Configuration	**P** - Tubular

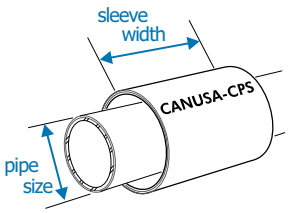

Min. Sleeve Width =
Bare Steel Dimension + **50 mm** (2") min. on each side of the pipe joint.

The above represent standard ordering options. Consult your Canusa representative for any unique project requirements.

CANUSA-CPS
A SHAWCOR COMPANY

www.canusacps.com

Canada
CANUSA-CPS
a division of SHAWCOR LTD.
25 Bethridge Road
Rexdale, Ontario
M9W 1M7,
Canada
Tel: +1 (416) 743-7111
Fax: +1 (416) 743-5927

U.S.A./Latin America
CANUSA-CPS
a division of SHAWCOR INC.
2408 Timberloch Place
Building C-8
The Woodlands, Texas
77380, U.S.A.
Tel: +1 (281) 367-8866
Fax: +1 (281) 367-4304

Europe/Middle East
CANUSA-CPS
a division of Canusa Systems Ltd.
Darby House
Bletchingley Road
Merstham, Surrey
RH1 3DN, England
Tel: +44 (1737) 644014
Fax: +44 (1737) 645800

Asia/Pacific
CANUSA-CPS
a division of Shaw Pipeline
Services (Singapore) PTE Ltd.
896 Dunearn Road #04-04A
Sime Darby Centre
589472, Singapore
Tel: +65-469-9866
Fax: +65-469-2632

Canusa warrants that the product conforms to its chemical and physical description and is appropriate for the use stated on the installation guide when used in compliance with Canusa's written instructions. Since many installation factors are beyond our control, the user shall determine the suitability of the products for the intended use and assume all risks and liabilities in connection therewith. Canusa's liability is stated in the standard terms and conditions of sale. Canusa makes no other warranty either expressed or implied. All information contained in this installation guide is to be used as a guide and is subject to change without notice. This installation guide supersedes all previous installation guides on this product. E&OE Printed on recycled paper. Recyclable. PDS-CTpla-rev011

DYWIDAG-SYSTEMS INTERNATIONAL

April 9, 2013

T. BUCK CONSTRUCTION, INC.
249 Merrow Road
Auburn, Maine 04210

Attention: Mr. Brian R. Emmons

Reference: Jamaica ER-BRF 013-1(16)
1-3/8" Grade 150 Threadbar for Pier Cap Post-Tensioning and
Pier Vertical Reinforcement

Dear Mr. Emmons,

This is to certify that the 1-3/8" Threadbar systems proposed for the above referenced job as per DSI Submittal dated March 22nd, 2003 meet the requirements of its Special Provisions. Also, as stated in Section 51. Certification of Post-Tensioning Systems of the same contract document, the proposed 1-3/8" Threadbar PT Bar System 100 is already approved by the Vermont Agency of Transportation.

Feel free to contact us with any questions or comments that you may have.

Sincerely,

DYWIDAG-Systems International USA, Inc.

Edgar F. Zuniga
Senior Engineer
HQ Technical Services Department
DYWIDAG-Systems International USA, Inc.
320 Marmon Dr.
Bolingbrook, IL 60440
P: (630) 739-1100
F: (630) 739-1405
www.dsiamerica.com

Cc: - Joe Salvadori, Sales Manager North East, DSI PTE Business Unit
- Sandy Crump, Project Manager, DSI PTE Business Unit
- Khaled Shawwaf, Technical Manager, DSI HQ Technical Services Department.