GENERAL NOTES

CONSTRUCTION SPECIFICATIONS

1. ALL MATERIAL AND WORKMANSHIP TO BE IN ACCORDANCE WITH THE STATE OF VERMONT AGENCY OF TRANSPORTATION STANDARD SPECIFICATIONS FOR CONSTRUCTION DATED 2011, AND THE AASHTO LRFD BRIDGE DESIGN SPECIFICATIONS DATED 2012, AND THEIR LATEST REVISIONS.

MATERIAL SPECIFICATIONS

1. ALL STRUCTURAL STEEL TO BE UNPAINTED AASHTO M270 GRADE 50W, UNLESS NOTED.
2. MATERIAL NOTES "T2" ON DETAIL DRAWINGS SHALL BE CHARPY V-NOTCH TESTED IN ACCORDANCE WITH THE REQUIREMENTS OF VERMONT STANDARD SPECIFICATIONS SECTION 714.01.
3. HIGH STRENGTH BOLTS SHALL BE 7/8" DIAMETER, ASTM A325 (TYPE 3), IN 15/16" DIAMETER HOLES. NUTS SHALL BE A563 (TYPE 3) GRADE C3, AND WASHERS SHALL BE F436 (TYPE 3).

   BOLTS & NUTS SHALL BE ROTATIONAL CAPACITY TESTED. DO NOT MIX BOLTS & NUTS FROM DIFFERENT CONTAINERS UNLESS ALL BOLTS & NUTS HAVE THE SAME LOT NUMBER.

FABRICATION

1. ALL HOLES SHALL BE PUNCHED OR DRILLED FULL SIZE, UNLESS NOTED.

WELDING

10

1. THE CONFIGURATION OF THE WELD JOINTS AND ALL WELDING PROCEDURES SHALL BE IN ACCORDANCE WITH AASHTO/AWS D1.5-08 BRIDGE WELDING CODE; IN ADDITION TO THE PROVISIONS OF VERMONT STANDARD SPECIFICATIONS SECTION 506.10. ALL WELDING WILL BE DETAILED TO PRE-QUALIFIED JOINTS, UNLESS PROHIBITED BY THE DESIGNER.
2. WELDING OF MAIN LOAD CARRYING MEMBERS AND ATTACHMENTS SHALL BE PERFORMED USING THE AUTOMATIC SUBMERGED ARC & SHIELDED METAL ARC PROCESSES. ALL WELDS ARE CONTINUOUS, UNLESS NOTED.
3. NON-DESTRUCTIVE TESTING OF WELDS SHALL BE IN ACCORDANCE WITH THE REFERENCED SPECIFICATION.
4. SEE DETAIL "WS1" FOR THE WELD TERMINATION DETAIL.

FIELD CONNECTIONS

1. ALL FIELD CONNECTIONS SHALL BE MADE WITH 7/8" DIAMETER HIGH STRENGTH A325 BOLTS, INSTALLED PER SECTION 506.19(c). SEE SHEET E1 FOR BOLT SIZES.
2. BOLTS SHALL HAVE A HEAVY HEX HEAD, HEAVY HEX NUT, AND AT LEAST ONE HARD FLAT WASHER EACH. WASHER TO BE PLACED UNDER THE TURNED ELEMENT.
3. PIECE MARKS WILL BE LOCATED AS SHOWN ON SHEET E1.

CLEANING

1. ALL STEEL SHALL BE BLAST CLEANED IN ACCORDANCE WITH SSPC SP-10.

PAINTING

1. ALL STEEL SHALL BE UNPAINTED.

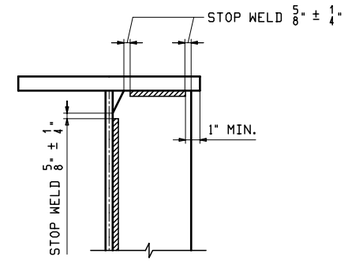

DETAIL "WS1"

STIFF. WELD TERMINATION

NOTE TO ENGINEER:
THESE NOTES ARE NOT INTENDED TO BE ALL INCLUSIVE AND COMPLIANCE WITH RELEVANT SPECIFICATIONS REMAIN UNCHANGED.

Vermont Agency of Transportation
RECEIVED
CK'D BY GML/JWC OK'D BY GG
March 6, 2013
RESUBMIT NO Approved AsNoted
BY KMH DATE 03/18/13

REV.	DATE	REMARKS	DWN	CHK	APVL	SHOP
0						

MATERIAL:	SURFACE PREP. & PAINT:	HOLES:	SHOP BOLTS:

DESCRIPTION: GENERAL NOTES

CASCO BAY STEEL STRUCTURES, INC.
1 WALLACE AVE. PHONE (207) 780-6722
SOUTH PORTLAND, ME 04106 FAX. (207) 780-6726
TENSOR 3161

STRUCTURE: VT 100 OVER WARDSBORO BROOK BRIDGE NO 78 WINDHAM COUNTY	DRAWN: EEO	DATE: 02/04	
	CHKD: DBH	DATE: 02/27	
LOCATION: TOWN OF JAMAICA, VT	JOB NO.	DWG NO.	
PROJ NO. ER-BRF 013-1(16)	529-1	GN1	
CUSTOMER: T. BUCK CONSTRUCTION		REV.	

EEO Thu, Feb 28, 2013 03:04:04 PM /users/jobs/3161/GN1 : Rev0

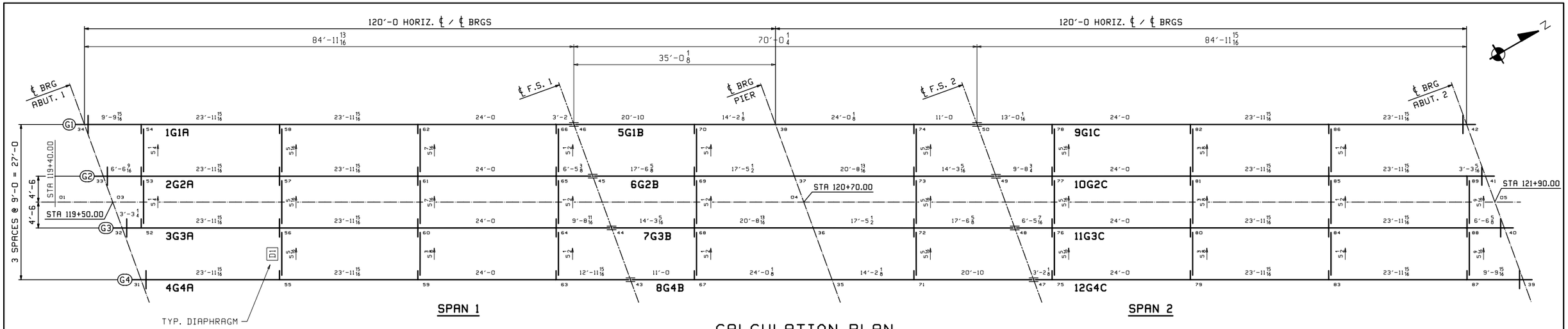

CALCULATION PLAN

LINE	GRADE ABUT. 1	GRADE PIER	GRADE ABUT. 2
1	-.0120	-.0160	-.0205
2	-.0121	-.0160	-.0199
3	-.0121	-.0160	-.0199
4	-.0115	-.0160	-.0200

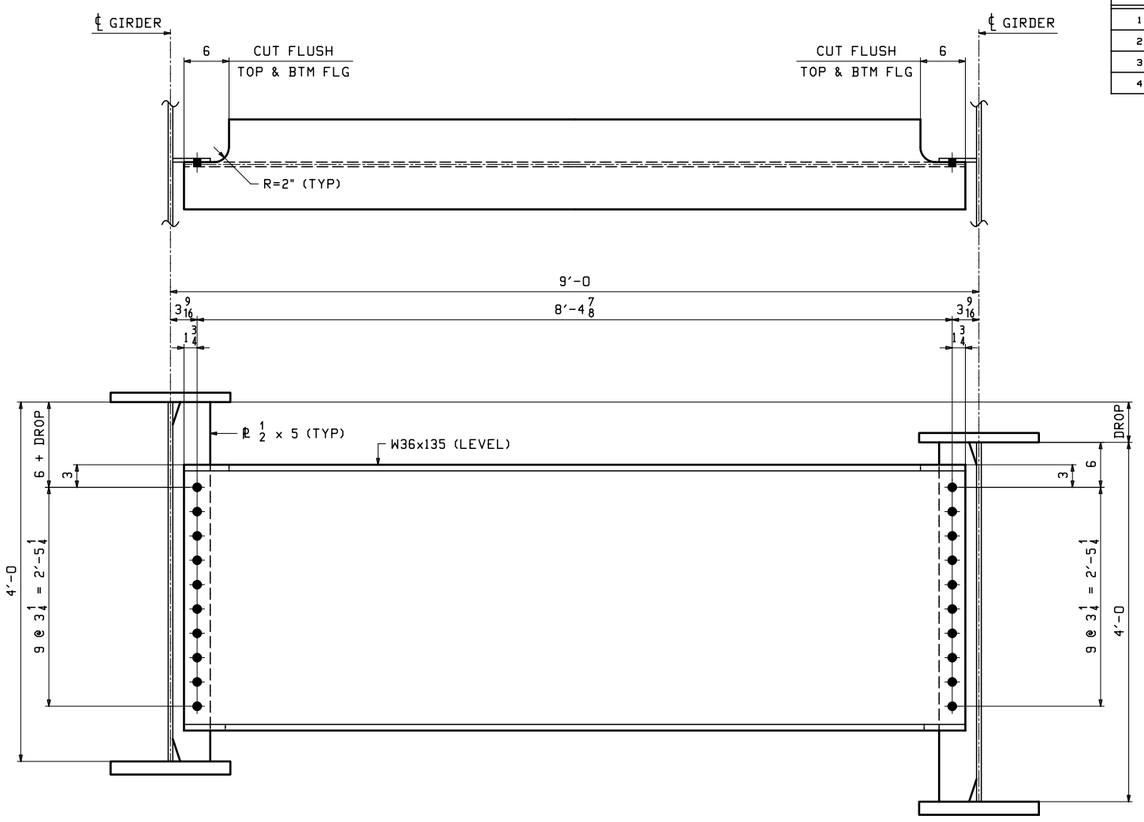

INT. DIAPHRAGM ~ TYPE "D1"

LOOKING DOWNSTATION

**** NOTE ****
THE PURPOSE OF THIS DRAWING IS TO COORDINATE GEOMETRIC CONTROL INFORMATION. THIS DWG IS SUBMITTED FOR INFORMATION ONLY AND IS NOT INTENDED FOR SHOP FABRICATION.

NOTES
1. LONGITUDINAL DIMENSIONS ARE SLOPING ALONG BOTT OF WEB WITH CORRECTIONS MADE FOR GRADE & DL CAMBER (UN).
2. TRANSVERSE DIMENSIONS ARE IN A HORIZ. PLANE (UN).
3. DROP ARROW POINTS TOWARDS LOW END OF MEMBER.
4. ENDS OF GIRDERS AND BRG. STIFF'S ARE VERTICAL AFTER DL ROTATION.
5. DIAPHRAGM CONN. PLATES ARE NORMAL TO GRADE.
6. BOTT PT NUMBERS = TOP PT NUMBERS + 100.
7. DIAPHRAGM DROPS ARE CALCULATED IN THEIR FINAL POSITION.
8. COMBINE DIAPHRAGMS FOR DIFFERENCES IN DROPS OF +/- 1/16".

REV.	DATE	REMARKS	DWN	CHK	APVL	SHOP
0						

MATERIAL:	SURFACE PREP. & PAINT:	HOLES:	SHOP BOLTS:
M270-50W	SEE GN1	15/16"Ø	

DESCRIPTION: CALCULATION PLAN & LAYOUT

CASCO BAY STEEL STRUCTURES, INC.
1 WALLACE AVE. PHONE (207) 780-6722
SOUTH PORTLAND, ME 04106 FAX. (207) 780-6726
TENSOR 3161

STRUCTURE: VT 100 OVER WARDSBORO BROOK
BRIDGE NO 78
WINDHAM COUNTY

DRAWN:	DATE:
EEO	01/30
CHKD:	DATE:
DBH	02/27

LOCATION:	TOWN OF JAMAICA, VT	JOB NO.	DWG NO.
PROJ NO.	ER-BRF 013-1(16)	529-1	WS1
CUSTOMER:	T. BUCK CONSTRUCTION		REV. △

Vermont Agency of Transportation
RECEIVED
Steel Shop Drawings.pdf
CK'D BY GML/JWC OK'D BY GG
March 6, 2013
RESUBMIT BY KMH
Approved
DATE 03/18/13

EEO Thu, Feb 28, 2013 01:43:13 PM /users/jobs/3161/WS1 - Rev0

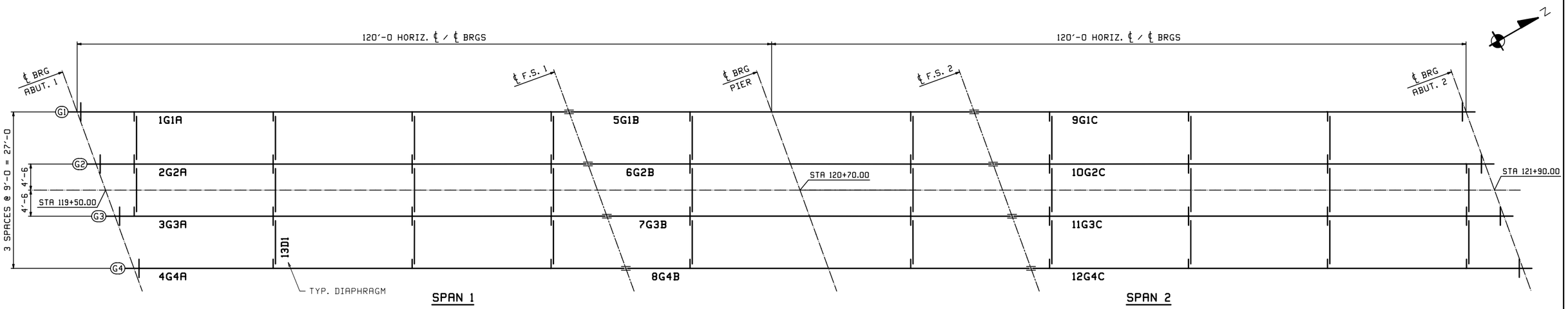

FRAMING PLAN

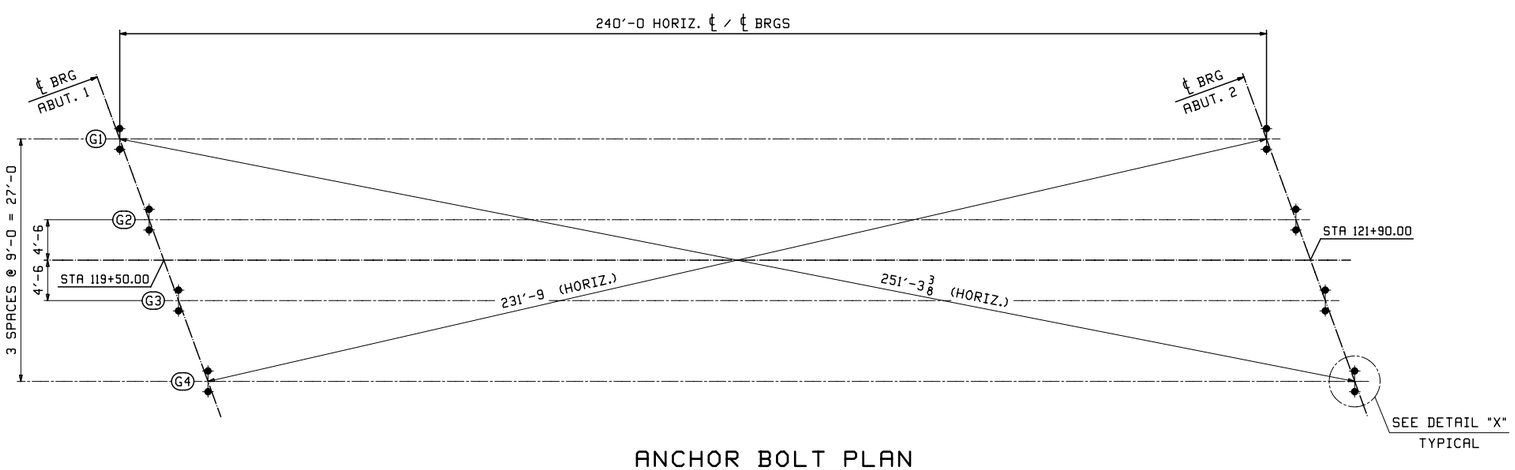

ANCHOR BOLT PLAN

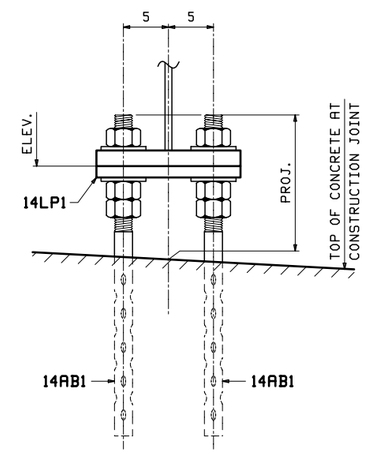

SECTION A-A

TYPICAL

GIRDER LINE		PROJ.	ELEV.
ABUT. 1	G1	1'-3 1/4	683.24
	G2	1'-3 1/4	683.64
	G3	1'-3 1/4	684.04
	G4	1'-3 1/4	684.43
ABUT. 2	G1	1'-2 1/4	679.40
	G2	1'-2 1/4	679.80
	G3	1'-2 1/4	680.20
	G4	1'-2 1/4	680.59

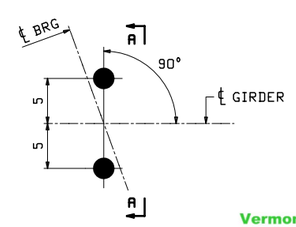

DETAIL "X"

TYPICAL

FIELD BOLT LIST — A325 Type 3 BOLTS

LINE	NO REQ'D.	BOLT DIAM.	BOLT LEN.	BOLTS /CONN.	# OF CONN.	GRIP	THICKNESS OF PCS. CONNECTED						WASH CODE	PIECES CONNECTED AND REMARKS
1														
2														FIELD SPLICE
3	448	7/8	5 1/2	56	8	3 7/8	3/4	2 1/4	7/8				2	Top Flange Splice
4	624	7/8	3	78	8	1 5/8	1/2	5/8	1/2				1	Web Splice
5	512	7/8	6	64	8	4 3/8	3/4	2 3/4	7/8				2	Btm Flange Splice
6														
7														INT. DIAPHRAGMS
8	560	7/8	2 1/2	10	56	1 1/8	1/2	5/8					1	Conn. Plate ~ Diaphragm Web
9														

WASHER CODES

1: 1 Hard Flat Washer
2: 2 Hard Flat Washers

FIELD BOLT SUMMARY — 2% + 2 ADDED, MIN. 2 EXTRA

LINE	NO. OF BOLTS	BOLT DIAM.	TYPE	BOLT LEN	ACTUAL COUNT	REMARKS
1	573	7/8	A325 Type 3	2 1/2	560	
2	638	7/8	↑	3	624	
3	459	7/8	↓	5 1/2	448	
4	524	7/8	A325 Type 3	6	512	
5						
6	3177	Hard Flat Washers	for 7/8 ø	BOLT	F436-3	
7						
8						
9						

Vermont Agency of Transportation
RECEIVED
Bridge Shop Drawings.pdf
CK'D BY GML/JWC OK'D BY GG
March 6, 2013
RESUBMIT BY KMH
Approved DATE 03/18/13

REV.	DATE	REMARKS	DWN	CHK	APVL	SHOP
0						

MATERIAL: | SURFACE PREP. & PAINT: | HOLES: | SHOP BOLTS:

DESCRIPTION: FRAMING PLAN, ANCHOR BOLT PLAN & FIELD BOLTS

CASCO BAY STEEL STRUCTURES, INC.
1 WALLACE AVE. PHONE (207) 780-6722
SOUTH PORTLAND, ME 04106 FAX. (207) 780-6726
TENSOR 3161

STRUCTURE: VT 100 OVER WARDSBORO BROOK
BRIDGE NO 78
WINDHAM COUNTY

DRAWN: EEO DATE: 02/04
CHKD: DBH DATE: 02/27

LOCATION: TOWN OF JAMAICA, VT
PROJ NO. ER-BRF 013-1(16)
CUSTOMER: T. BUCK CONSTRUCTION

JOB NO. 529-1
DWG NO. E1
REV. △

EEO Thu, Feb 28, 2013 05:08:16 PM /users/jobs/2501/E1 : Rev0

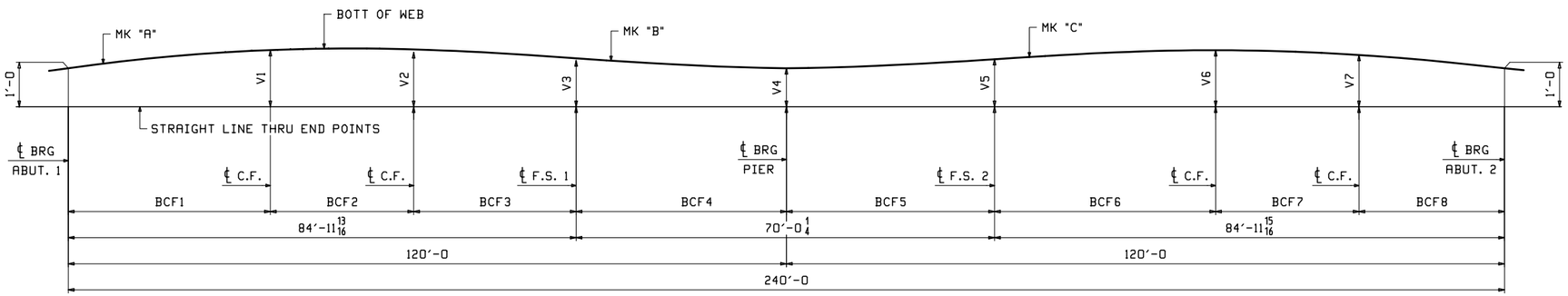

SHOP ASSEMBLY DIAGRAM

LINE	V1	V2	V3	V4	V5	V6	V7	BCF1	BCF2	BCF3	BCF4	BCF5	BCF6	BCF7	BCF8	"A"	"B"	"C"
1	1'-3 1/4	1'-3 9/16	1'-1 15/16	1'-0	1'-1 15/16	1'-3 11/16	1'-2 5/8	33'-9 7/8	23'-11 15/16	27'-2	35'-0 1/8	35'-0 1/8	37'-0 1/16	23'-11 15/16	23'-11 15/16	1G1A	5G1B	9G1C
2	1'-3 5/16	1'-3 7/8	1'-2 1/16	1'-0	1'-2 1/16	1'-3 15/16	1'-3 1/16	30'-6 1/2	23'-11 15/16	30'-5 3/8	35'-0 1/8	35'-0 1/8	33'-8 3/4	23'-11 15/16	27'-3 1/4	2G2A	6G2B	10G2C
3	1'-3 1/16	1'-3 15/16	1'-2 1/16	1'-0	1'-2 1/16	1'-3 7/8	1'-3 5/16	27'-3 3/16	23'-11 15/16	33'-8 11/16	35'-0 1/8	35'-0 1/8	30'-5 7/16	23'-11 15/16	30'-6 9/16	3G3A	7G3B	11G3C
4	1'-2 5/8	1'-3 11/16	1'-1 15/16	1'-0	1'-1 15/16	1'-3 9/16	1'-3 1/4	23'-11 15/16	23'-11 15/16	36'-11 15/16	35'-0 1/8	35'-0 1/8	27'-2 1/8	23'-11 15/16	33'-9 7/8	4G4A	8G4B	12G4C

NOTES:
1. FOR GENERAL NOTES SEE SHEET GN1.
2. ALL DIMENSIONS GIVEN AT BTM OF WEB.

REV.	DATE	REMARKS	DWN	CHK	APVL	SHOP
0						

MATERIAL: | SURFACE PREP. & PAINT: | HOLES: | SHOP BOLTS:

DESCRIPTION: SHOP ASSEMBLY DIAGRAM

CASCO BAY STEEL STRUCTURES, INC.
1 WALLACE AVE. PHONE (207) 780-6722
SOUTH PORTLAND, ME 04106 FAX. (207) 780-6726
TENSOR 3161

STRUCTURE: VT 100 OVER WARDSBORO BROOK
BRIDGE NO 78
WINDHAM COUNTY

DRAWN: EEO DATE: 02/04
CHKD: DBH DATE: 02/27

LOCATION: TOWN OF JAMAICA, VT
PROJ NO. ER-BRF 013-1(16)
CUSTOMER: T. BUCK CONSTRUCTION

JOB NO. 529-1
DWG NO. SA1
REV. △

Vermont Agency of Transportation
RECEIVED
CK'D BY GML/JWC OK'D BY GG
March 6, 2013
RESUBMIT Approved
BY KMH DATE 03/18/13

EEO Thu, Feb 28, 2013 01:52:05 PM /users/jobs/3161/SA1 : Rev0

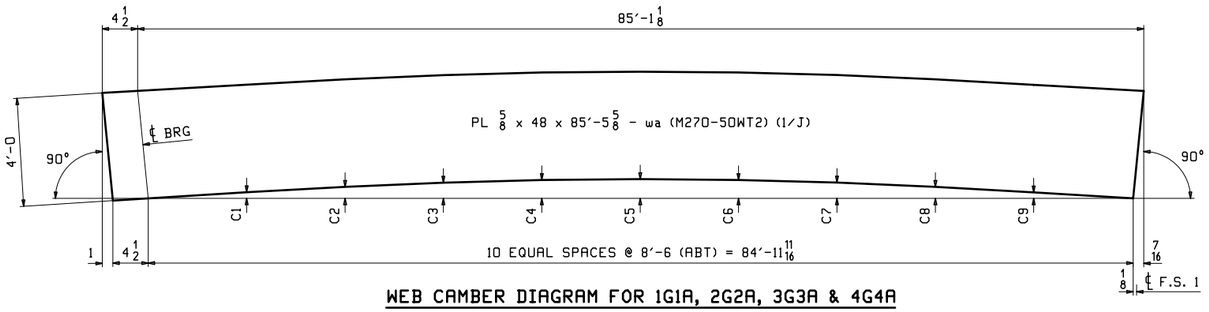

WEB CAMBER DIAGRAM FOR 1G1A, 2G2A, 3G3A & 4G4A

MARK	C1	C2	C3	C4	C5	C6	C7	C8	C9
1G1A	7/8	1 9/16	2 1/8	2 1/2	2 5/8	2 1/2	2 3/16	1 9/16	13/16
2G2A	7/8	1 5/8	2 5/16	2 11/16	2 13/16	2 11/16	2 5/16	1 11/16	7/8
3G3A	7/8	1 5/8	2 5/16	2 11/16	2 13/16	2 11/16	2 5/16	1 11/16	7/8
4G4A	7/8	1 5/8	2 3/16	2 1/2	2 5/8	2 1/2	2 1/8	1 9/16	7/8

Vermont Agency of Transportation
RECEIVED
CK'D BY GML/JWC OK'D BY GG
March 6, 2013
RESUBMIT Approved
BY KMH DATE 03/18/13

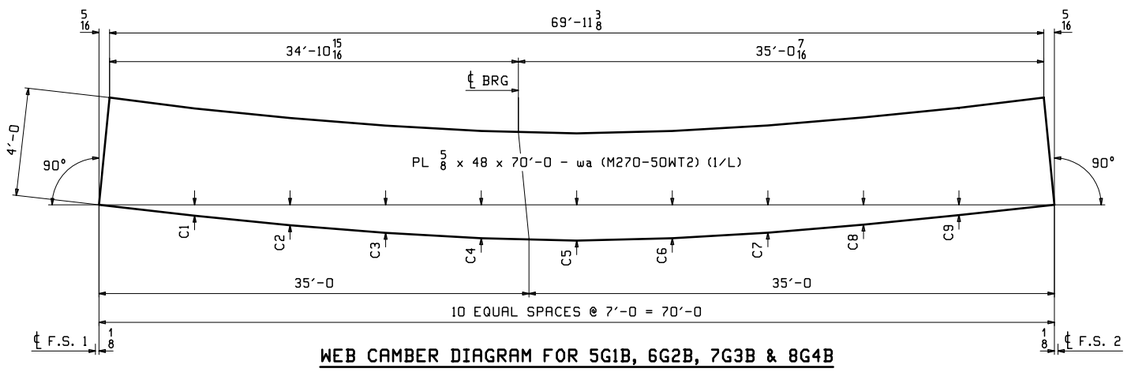

WEB CAMBER DIAGRAM FOR 5G1B, 6G2B, 7G3B & 8G4B

MARK	C1	C2	C3	C4	C5	C6	C7	C8	C9
5G1B	9/16	1 1/8	1 1/2	1 13/16	1 15/16	1 13/16	1 1/2	1 1/16	9/16
6G2B	5/8	1 3/16	1 5/8	1 7/8	2 1/16	1 7/8	1 9/16	1 1/8	5/8
7G3B	5/8	1 1/8	1 5/8	1 7/8	2 1/16	1 7/8	1 5/8	1 3/16	5/8
8G4B	9/16	1 1/16	1 1/2	1 13/16	1 15/16	1 13/16	1 1/2	1 1/8	9/16

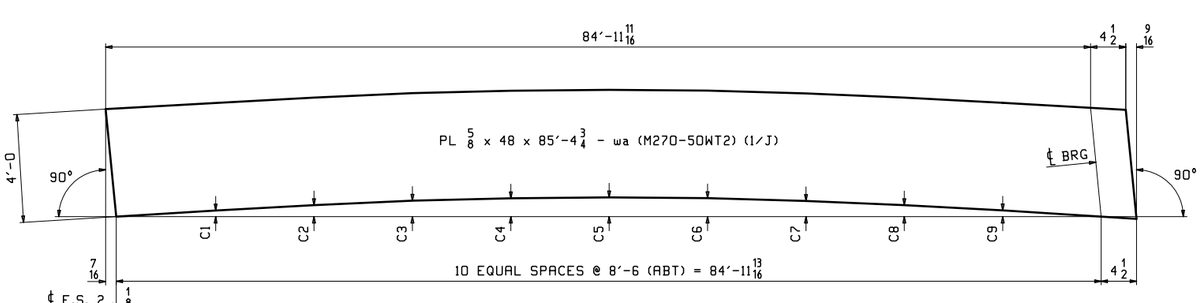

WEB CAMBER DIAGRAM FOR 9G1C, 10G2C, 11G3C & 12G4C

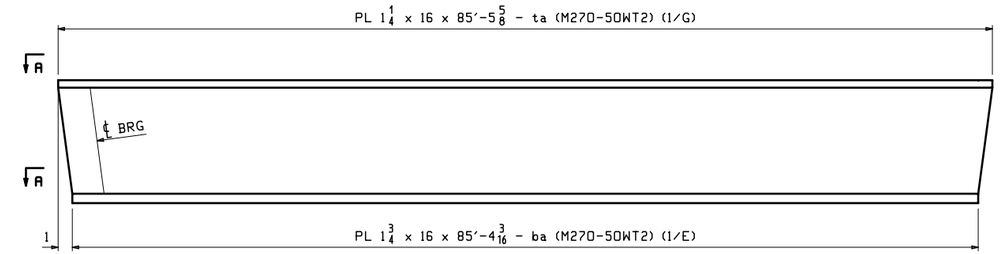

FLANGE DIAGRAM FOR 1G1A, 2G2A, 3G3A & 4G4A

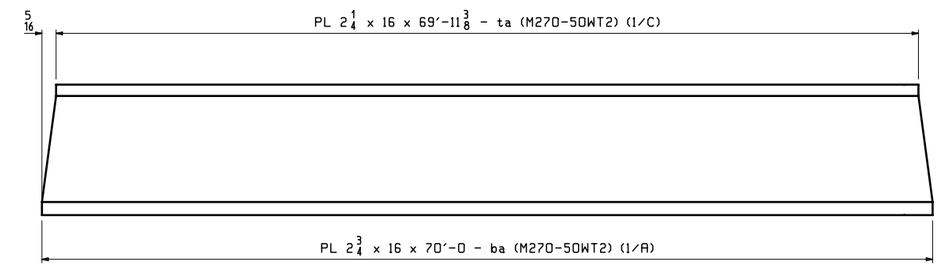

FLANGE DIAGRAM FOR 5G1B, 6G2B, 7G3B & 8G4B

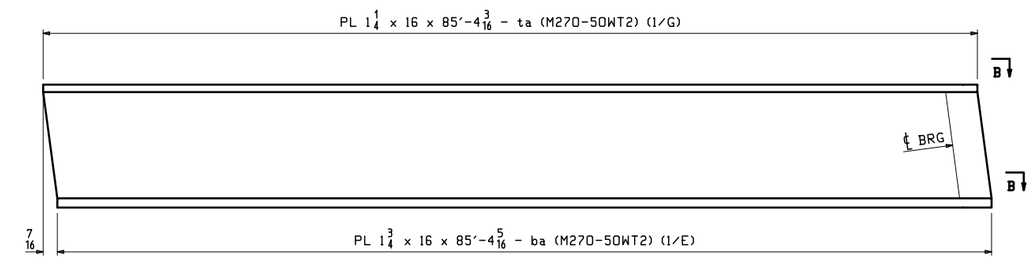

FLANGE DIAGRAM FOR 9G1C, 10G2C, 11G3C & 12G4C

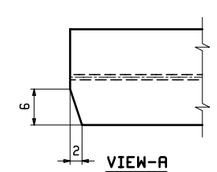

VIEW-A

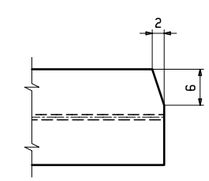

VIEW-B

MARK	C1	C2	C3	C4	C5	C6	C7	C8	C9
9G1C	7/8	1 9/16	2 1/8	2 1/2	2 5/8	2 1/2	2 3/16	1 5/8	7/8
10G2C	7/8	1 11/16	2 5/16	2 11/16	2 13/16	2 11/16	2 5/16	1 5/8	7/8
11G3C	7/8	1 11/16	2 5/16	2 11/16	2 13/16	2 11/16	2 5/16	1 5/8	7/8
12G4C	13/16	1 9/16	2 3/16	2 1/2	2 5/8	2 1/2	2 1/8	1 9/16	7/8

NOTES:
1. FOR GENERAL NOTES SEE DWG GN1.
2. T2 - DENOTES CHARPY V-NOTCH TESTING REQUIRED.

REV.	DATE	REMARKS	DWN	CHK	APVL	SHOP
0						

MATERIAL:	SURFACE PREP. & PAINT:	HOLES:	SHOP BOLTS:
M270-50WT2	SEE GN1		

DESCRIPTION: CAMBER AND FLANGE DIAGRAMS

CASCO BAY STEEL STRUCTURES, INC.
1 WALLACE AVE. PHONE (207) 780-6722
SOUTH PORTLAND, ME 04106 FAX. (207) 780-6726
TENSOR 3161

STRUCTURE: VT 100 OVER WARDSBORO BROOK
BRIDGE NO 78
WINDHAM COUNTY

DRAWN:	DATE:
EEO	01/31
CHKD:	DATE:
DBH	02/27

LOCATION: TOWN OF JAMAICA, VT
PROJ NO. ER-BRF 013-1(16)
CUSTOMER: T. BUCK CONSTRUCTION

JOB NO. 529-1
DWG NO. C1
REV. 0

EEO Thu, Feb 28, 2013 03:51:54 PM /users/jobs/3161/C1.Rev0

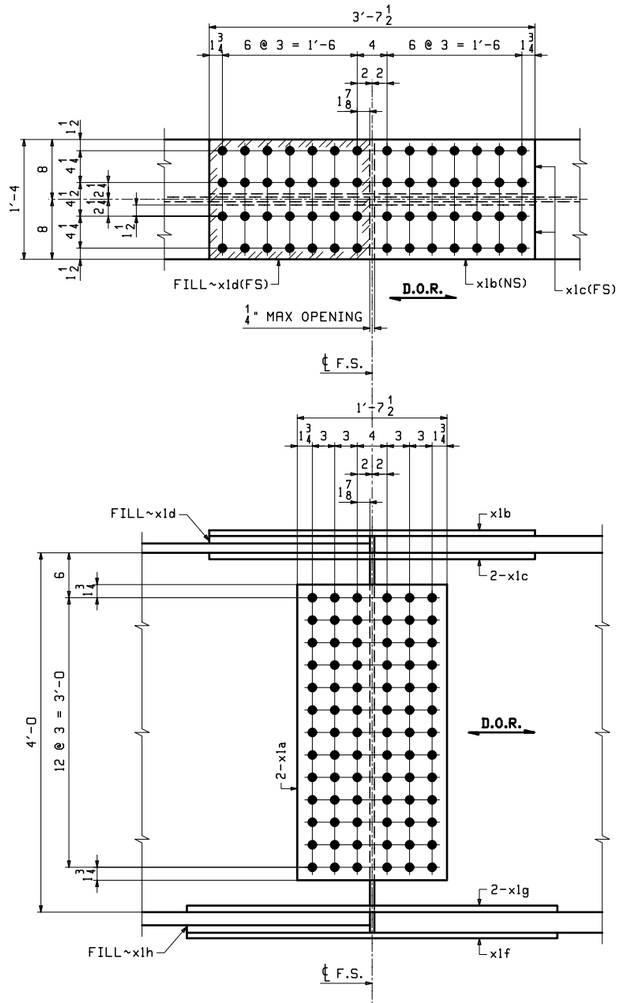

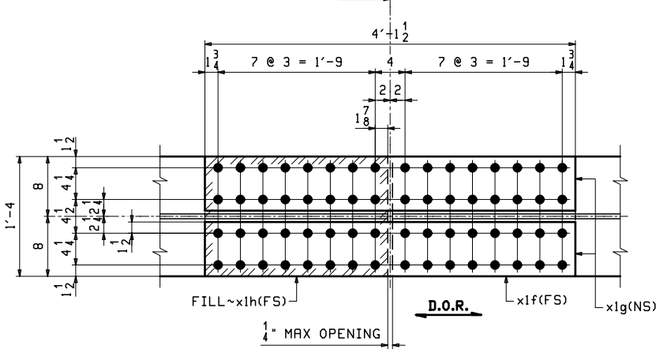

4 ~ FIELD SPLICE DETAIL ~ X1M1 (AS SHOWN)

FIELD SPLICE 1

4 ~ FIELD SPLICE DETAIL ~ X1M2 (ROTATE 180°)

FIELD SPLICE 2

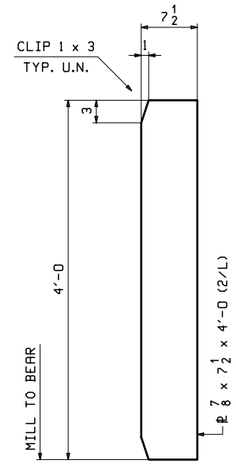

16 ~ BRG STIFF. ~ x1k

@ ABUT's

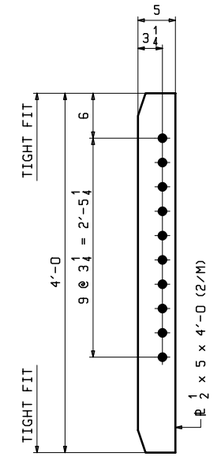

28 ~ CONN. PLATE ~ x1m

LOW SIDE

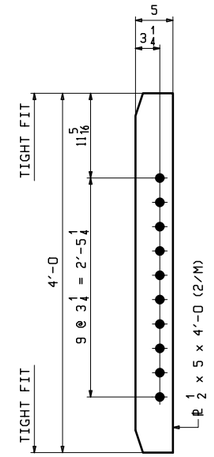

15 ~ CONN. PLATE ~ x1n

HIGH SIDE @ 5 1/4 - 5 3/8 DROP

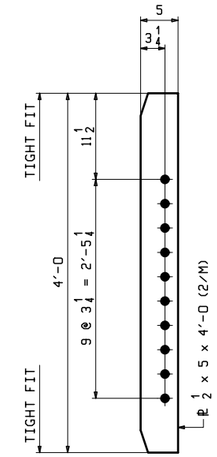

13 ~ CONN. PLATE ~ x1p

HIGH SIDE @ 5 7/16 - 5 9/16 DROP

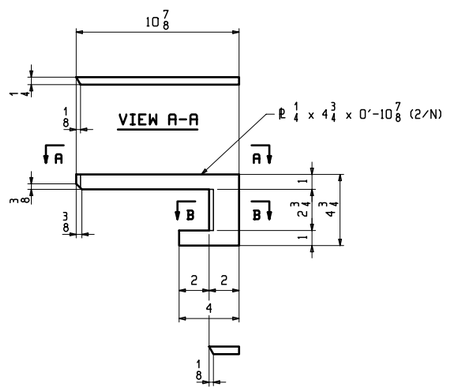

SECT B-B

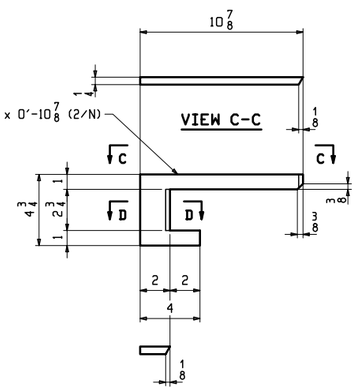

SECT D-D

ONE ~ DRIP PLATE ~ x1s

FAR SIDE OF G1 @ PIER

ONE ~ DRIP PLATE ~ x1t

NEAR SIDE OF G4 @ PIER

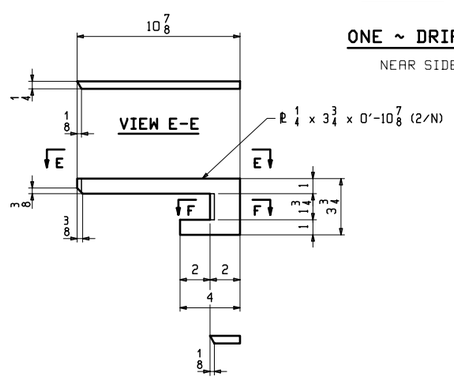

SECT F-F

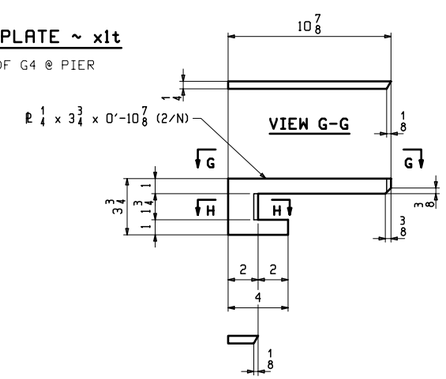

SECT H-H

ONE ~ DRIP PLATE ~ x1v

FAR SIDE OF G1 @ ABUT. 2

ONE ~ DRIP PLATE ~ x1w

NEAR SIDE OF G4 @ ABUT. 2

BILL OF MATERIAL

JOB NO. 529-1 — DRAWING NO. X1 — REV.

ABM INFO PAGE	ABM INFO LINE	SHIP MARK	QTY	MARK	MATERIAL	LENGTH FT	LENGTH INCHES	REMARKS	WT	PROCUREMENT NOTES
		X1M1	4		FIELD SPLICE	1			1079	
2	B		8	x1a	PL 1/2x39 1/2	1	7 1/2	M270-50WT2	109	
2	C		4	x1b	PL 3/4x16	3	7 1/2	M270-50WT2	148	
2	D		8	x1c	PL 7/8x7 1/4	3	7 1/2	M270-50WT2	78	
2	G		4	x1d	PL 1x16	1	9 5/8	FILL	98	
2	E		4	x1f	PL 3/4x16	4	1 1/2	M270-50WT2	168	
2	F		8	x1g	PL 7/8x7 1/4	4	1 1/2	M270-50WT2	89	
2	H		4	x1h	PL 1x16	2	0 5/8	FILL	112	
		X1M2	4		FIELD SPLICE	2			1079	
2	B		8	x1a	PL 1/2x39 1/2	1	7 1/2	M270-50WT2	109	
2	C		4	x1b	PL 3/4x16	3	7 1/2	M270-50WT2	148	
2	D		8	x1c	PL 7/8x7 1/4	3	7 1/2	M270-50WT2	78	
2	G		4	x1d	PL 1x16	1	9 5/8	FILL	98	
2	E		4	x1f	PL 3/4x16	4	1 1/2	M270-50WT2	168	
2	F		8	x1g	PL 7/8x7 1/4	4	1 1/2	M270-50WT2	89	
2	H		4	x1h	PL 1x16	2	0 5/8	FILL	112	

NOTE:
MATERIAL FOR FIELD SPLICES BILLED HERE ONLY.
ALL OTHER MATERIAL BILLED ON DETAIL DRAWINGS.

Vermont Agency of Transportation
RECEIVED
CK'D BY GML/JWC OK'D BY GG
March 6, 2013
RESUBMIT BY KMH
Approved
DATE 03/18/13

NOTES:
1. FOR GENERAL NOTES SEE DRAWING GN1.
2. HOLES IN SPLICE PLATES ARE PRE-DRILLED.
3. ENDS OF GIRDERS ARE DRILLED FROM SOLID DURING SHOP ASSEMBLY, USING SPLICE PLATES AS A TEMPLATE.
4. T2 - DENOTES CHARPY V-NOTCH TESTING REQUIRED.
5. D.O.R. - DENOTES DIRECTION OF MILL ROLLING.

REV.	DATE	REMARKS	DWN	CHK	APVL	SHOP
0						

MATERIAL: M270-50W
SURFACE PREP. & PAINT: SEE GN1
HOLES: 15/16"Ø
SHOP BOLTS: NONE
DESCRIPTION: GIRDER STANDARDS

CASCO BAY STEEL STRUCTURES, INC.
1 WALLACE AVE. SOUTH PORTLAND, ME 04106
PHONE (207) 780-6722 FAX. (207) 780-6726
TENSOR 3161

STRUCTURE: VT 100 OVER WARDSBORO BROOK
BRIDGE NO 78
WINDHAM COUNTY

DRAWN: EEO DATE: 01/31
CHKD: DBH DATE: 02/27

LOCATION: TOWN OF JAMAICA, VT
PROJ NO. ER-BRF 013-1(16)
CUSTOMER: T. BUCK CONSTRUCTION

JOB NO. 529-1
DWG NO. X1
REV. △

EEO Fri, Mar 1, 2013 08:51:28 AM /users/jobs/2351/x1 - Rev0

ABM INFO		SHIP	BILL OF MATERIAL					JOB NO.	DRAWING NO.	REV.
								529-1	1	
PAGE	LINE	MARK	QTY	MARK	MATERIAL	LENGTH FT	LENGTH INCHES	REMARKS	WT	PROCUREMENT NOTES
		1G1A	1		GIRDER				22988	
1	J		1	wa	PL $\frac{5}{8}$x48	85	$5\frac{5}{8}$	M270-50WT2	8725	
1	G		1	ta	PL $1\frac{1}{4}$x16	85	$5\frac{5}{8}$	M270-50WT2	5817	
1	E		1	ba	PL $1\frac{3}{4}$x16	85	$4\frac{3}{16}$	M270-50WT2	8132	
2	L		2	x1k	PL $\frac{7}{8}$x$7\frac{1}{2}$	4	0		89	
2	M		4	x1m	PL $\frac{1}{2}$x5	4	0		34	

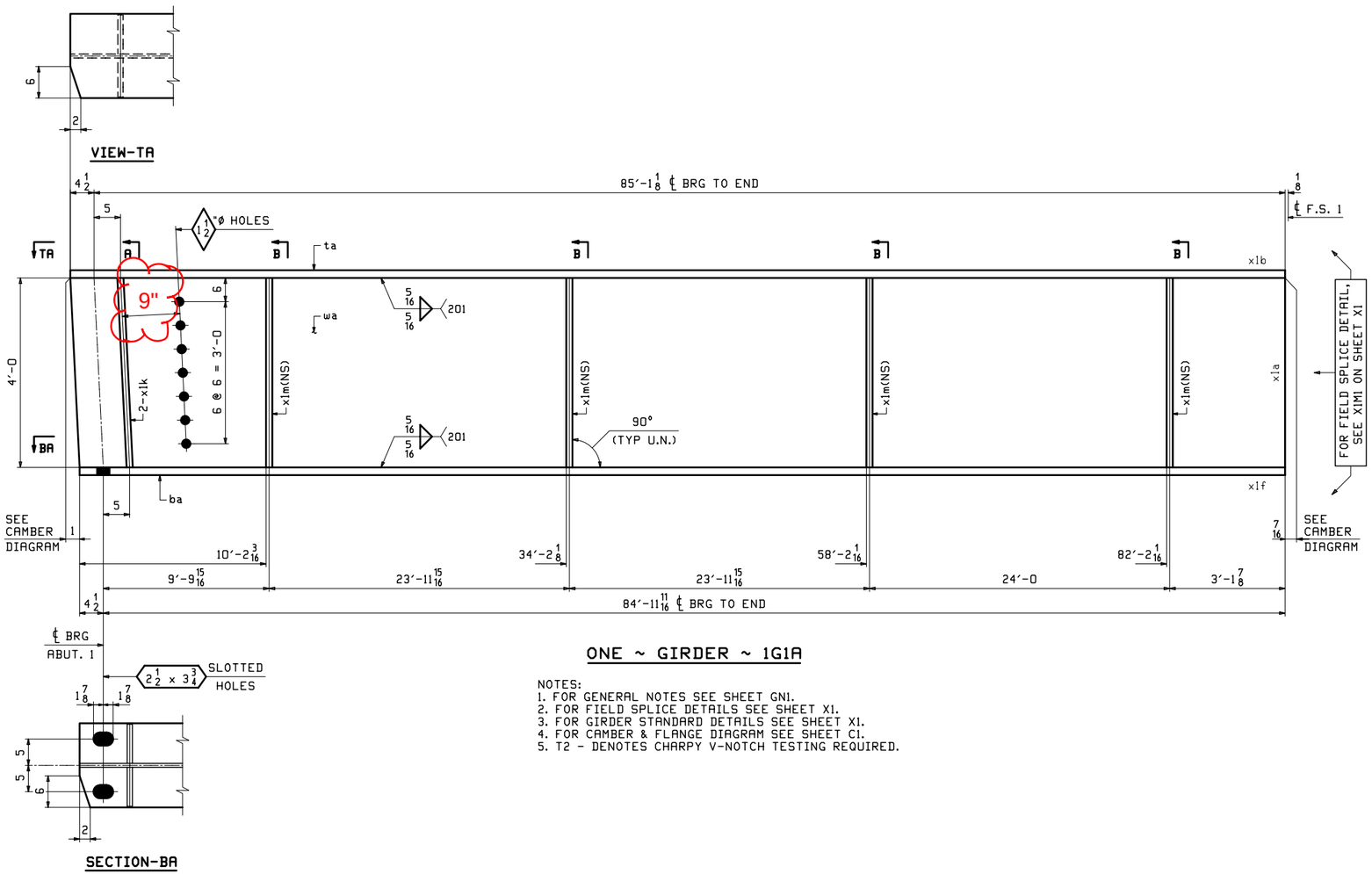

ONE ~ GIRDER ~ 1G1A

NOTES:
1. FOR GENERAL NOTES SEE SHEET GN1.
2. FOR FIELD SPLICE DETAILS SEE SHEET X1.
3. FOR GIRDER STANDARD DETAILS SEE SHEET X1.
4. FOR CAMBER & FLANGE DIAGRAM SEE SHEET C1.
5. T2 - DENOTES CHARPY V-NOTCH TESTING REQUIRED.

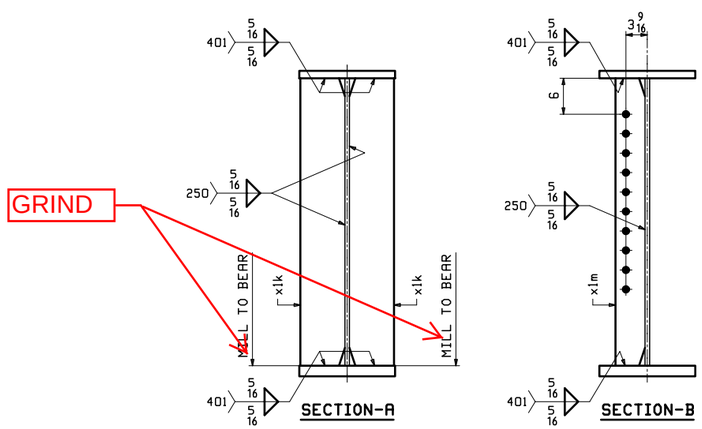

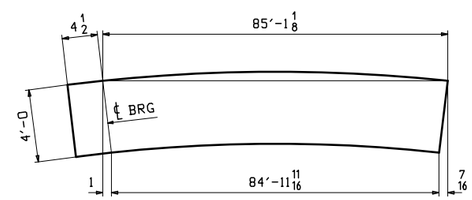

ORIENTATION DIAGRAM

REV.	DATE	REMARKS	DWN	CHK	APVL	SHOP
0						

MATERIAL:	SURFACE PREP. & PAINT:	HOLES:	SHOP BOLTS:
M270-50W	SEE GN1	$\frac{15}{16}$" Ø U.N.	NONE

DESCRIPTION: GIRDER ~ 1G1A

CASCO BAY STEEL STRUCTURES, INC.
1 WALLACE AVE. PHONE (207) 780-6722
SOUTH PORTLAND, ME 04106 FAX. (207) 780-6726
TENSOR 3161

STRUCTURE: VT 100 OVER WARDSBORO BROOK BRIDGE NO 78 WINDHAM COUNTY	DRAWN: EEO	DATE: 02/01	
	CHKD: DBH	DATE: 02/27	
LOCATION: TOWN OF JAMAICA, VT	JOB NO.	DWG NO.	
PROJ NO. ER-BRF 013-1(16)	529-1	1	
CUSTOMER: T. BUCK CONSTRUCTION		REV. △	

Vermont Agency of Transportation
RECEIVED
CK'D BY GML/JWC OK'D BY GG
March 6, 2013
RESUBMIT NO Approved AsNoted
BY KMH DATE 04/02/13

EEO Fri Mar 1, 2013 08:45:09 AM C:\ABM\JOBS\529\G1.1.Rev0

ABM INFO		SHIP	BILL OF MATERIAL					JOB NO. 529-1	DRAWING NO. 2	REV.
PAGE	LINE	MARK	QTY	MARK	MATERIAL	LENGTH FT	LENGTH INCHES	REMARKS	WT	PROCUREMENT NOTES
		2G2A	1		GIRDER				23124	
1	J		1	wa	PL $\frac{5}{8}$x48	85	$5\frac{5}{8}$	M270-50WT2	8725	
1	G		1	ta	PL $1\frac{1}{4}$x16	85	$5\frac{5}{8}$	M270-50WT2	5817	
1	E		1	ba	PL $1\frac{3}{4}$x16	85	$4\frac{3}{16}$	M270-50WT2	8132	
2	L		2	x1k	PL $\frac{7}{8}$x$7\frac{1}{2}$	4	0		89	
2	M		4	x1m	PL $\frac{1}{2}$x5	4	0		34	
2	M		2	x1n	PL $\frac{1}{2}$x5	4	0		34	
2	M		2	x1p	PL $\frac{1}{2}$x5	4	0		34	

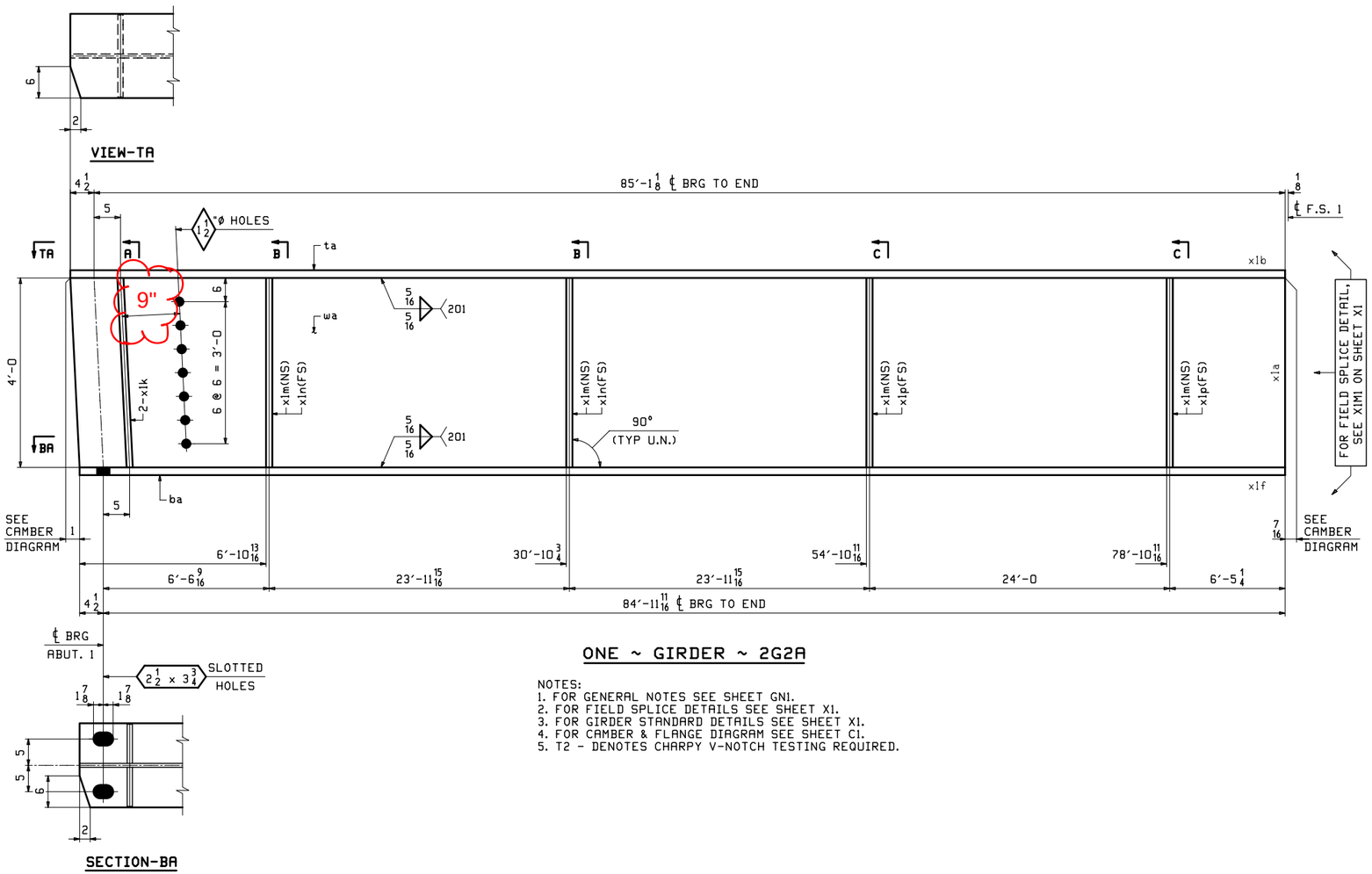

ONE ~ GIRDER ~ 2G2A

NOTES:
1. FOR GENERAL NOTES SEE SHEET GN1.
2. FOR FIELD SPLICE DETAILS SEE SHEET X1.
3. FOR GIRDER STANDARD DETAILS SEE SHEET X1.
4. FOR CAMBER & FLANGE DIAGRAM SEE SHEET C1.
5. T2 - DENOTES CHARPY V-NOTCH TESTING REQUIRED.

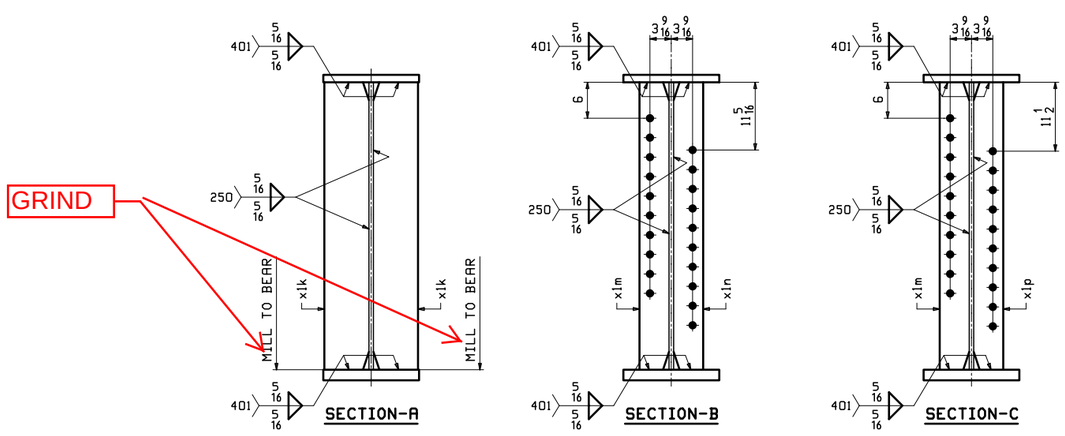

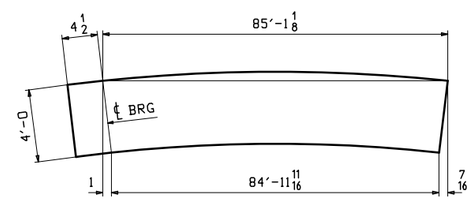

ORIENTATION DIAGRAM

REV.	DATE	REMARKS	DWN	CHK	APVL	SHOP
0						

MATERIAL:	SURFACE PREP. & PAINT:	HOLES:	SHOP BOLTS:
M270-50W	SEE GN1	15/16"Ø U.N.	NONE

DESCRIPTION: GIRDER ~ 2G2A

CASCO BAY STEEL STRUCTURES, INC.
1 WALLACE AVE. PHONE (207) 780-6722
SOUTH PORTLAND, ME 04106 FAX. (207) 780-6726
TENSOR 3161

STRUCTURE: VT 100 OVER WARDSBORO BROOK BRIDGE NO 78 WINDHAM COUNTY	DRAWN: EEO	DATE: 02/01	
	CHKD: DBH	DATE: 02/27	
LOCATION: TOWN OF JAMAICA, VT	JOB NO.	DWG NO.	
PROJ NO. ER-BRF 013-1(16)	529-1	2	
CUSTOMER: T. BUCK CONSTRUCTION		REV. △	

Vermont Agency of Transportation
RECEIVED
Review of BRF Bridge Program Preliminary Plans Only, Not Approved for Construction
CK'D BY GML/JWC OK'D BY GG
March 6, 2013
RESUBMIT NO Approved AsNoted
BY KMH DATE 04/02/13

EEO Fri Mar 1, 2013 08:45:16 PM C:\users\jdbr\2501\2_Rev0

ABM INFO		SHIP	BILL OF MATERIAL					JOB NO.	DRAWING NO.	REV.
								529-1	3	
PAGE	LINE	MARK	QTY	MARK	MATERIAL	LENGTH FT	LENGTH INCHES	REMARKS	WT	PROCUREMENT NOTES
		3G3A	1		GIRDER				23090	
1	J		1	wa	PL $\frac{5}{8}$x48	85	$5\frac{5}{8}$	M270-50WT2	8725	
1	G		1	ta	PL $1\frac{1}{4}$x16	85	$5\frac{5}{8}$	M270-50WT2	5817	
1	E		1	ba	PL $1\frac{3}{4}$x16	85	$4\frac{3}{16}$	M270-50WT2	8132	
2	L		2	x1k	PL $\frac{7}{8}$x$7\frac{1}{2}$	4	0		89	
2	M		3	x1m	PL $\frac{1}{2}$x5	4	0		34	
2	M		2	x1n	PL $\frac{1}{2}$x5	4	0		34	
2	M		2	x1p	PL $\frac{1}{2}$x5	4	0		34	

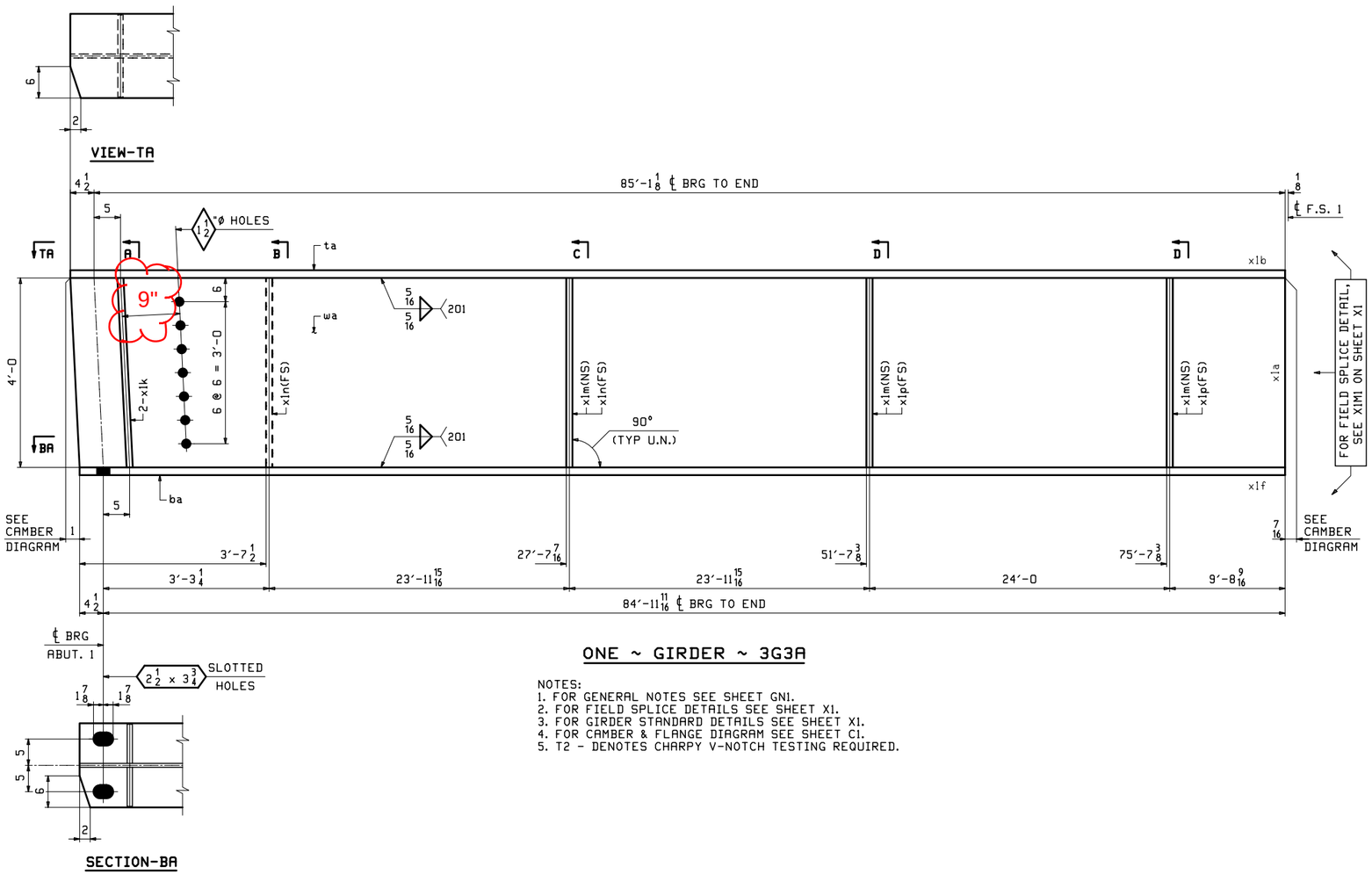

ONE ~ GIRDER ~ 3G3A

NOTES:
1. FOR GENERAL NOTES SEE SHEET GN1.
2. FOR FIELD SPLICE DETAILS SEE SHEET X1.
3. FOR GIRDER STANDARD DETAILS SEE SHEET X1.
4. FOR CAMBER & FLANGE DIAGRAM SEE SHEET C1.
5. T2 - DENOTES CHARPY V-NOTCH TESTING REQUIRED.

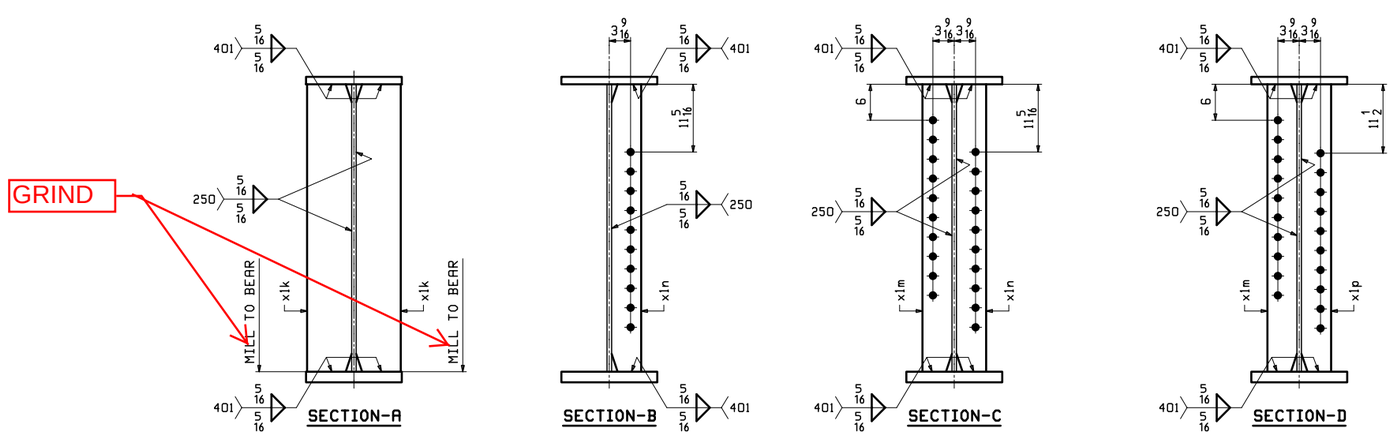

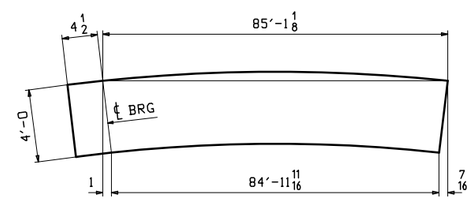

ORIENTATION DIAGRAM

Vermont Agency of Transportation
RECEIVED
CK'D BY GML/JWC OK'D BY GG
March 6, 2013
RESUBMIT NO Approved AsNoted
BY KMH DATE 04/02/13

REV.	DATE	REMARKS	DWN	CHK	APVL	SHOP
0						

MATERIAL:	SURFACE PREP. & PAINT:	HOLES:	SHOP BOLTS:
M270-50W	SEE GN1	15/16" ø U.N.	NONE

DESCRIPTION: GIRDER ~ 3G3A

CASCO BAY STEEL STRUCTURES, INC.
1 WALLACE AVE. PHONE (207) 780-6722
SOUTH PORTLAND, ME 04106 FAX. (207) 780-6726
TENSOR 3161

STRUCTURE: VT 100 OVER WARDSBORO BROOK BRIDGE NO 78 WINDHAM COUNTY	DRAWN: EEO	DATE: 02/01	
	CHKD: DBH	DATE: 02/27	
LOCATION: TOWN OF JAMAICA, VT	JOB NO.	DWG NO.	
PROJ NO. ER-BRF 013-1(16)	529-1	3	
CUSTOMER: T. BUCK CONSTRUCTION		REV.	

EEO Fri Mar 1, 2013 08:45:26 PM c:\work\abm\2301\3.1.Rev0

ABM INFO		SHIP	BILL OF MATERIAL					JOB NO.	DRAWING NO.	REV.
								529-1	4	
PAGE	LINE	MARK	QTY	MARK	MATERIAL	LENGTH FT	LENGTH INCHES	REMARKS	WT	PROCUREMENT NOTES
		4G4A	1		GIRDER				22954	
1	J		1	wa	PL $\frac{5}{8}$x48	85	$5\frac{5}{8}$	M270-50WT2	8725	
1	G		1	ta	PL $1\frac{1}{4}$x16	85	$5\frac{5}{8}$	M270-50WT2	5817	
1	E		1	ba	PL $1\frac{3}{4}$x16	85	$4\frac{3}{16}$	M270-50WT2	8132	
2	L		2	x1k	PL $\frac{7}{8}$x$7\frac{1}{2}$	4	0		89	
2	M		2	x1n	PL $\frac{1}{2}$x5	4	0		34	
2	M		1	x1p	PL $\frac{1}{2}$x5	4	0		34	

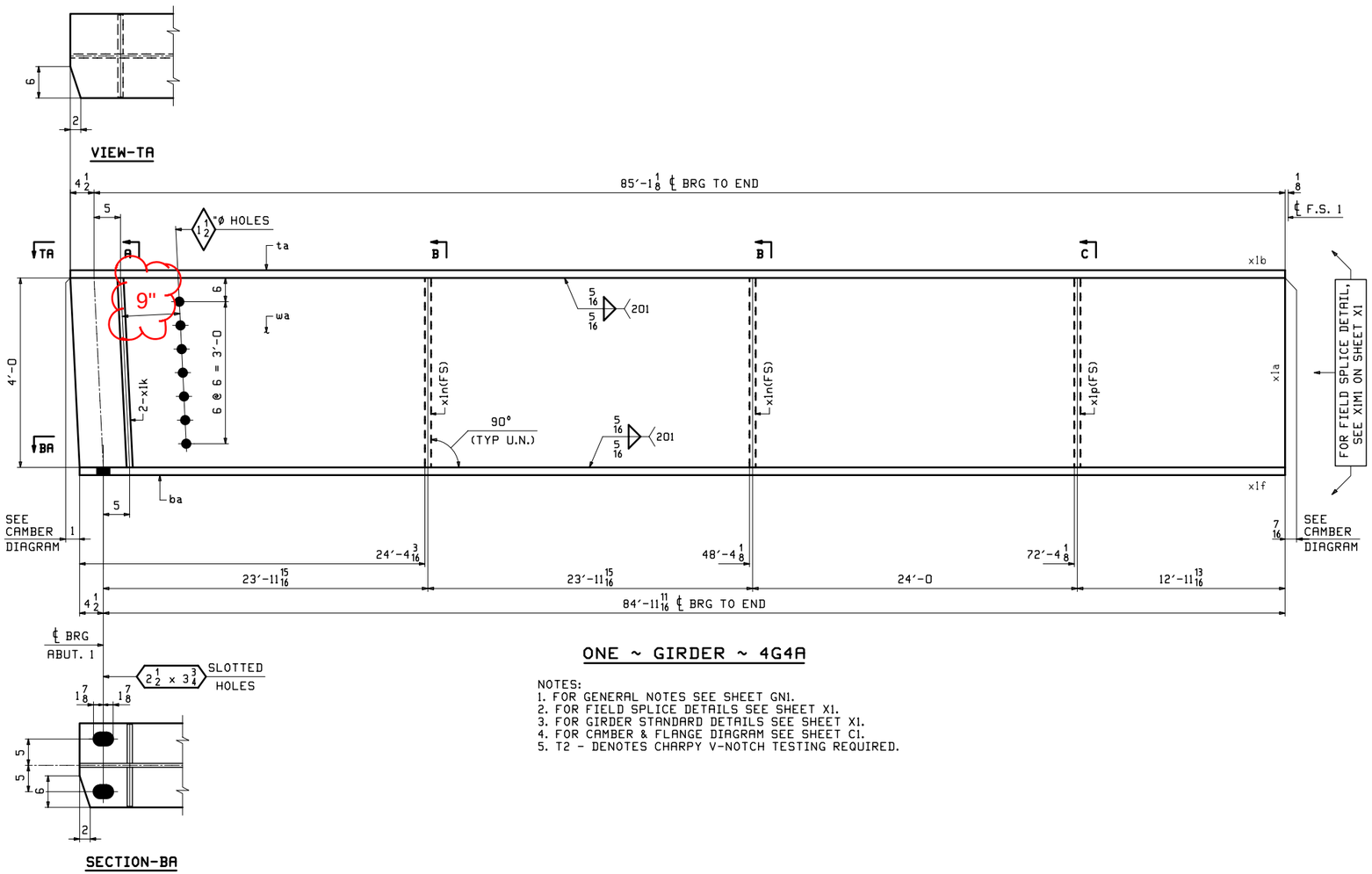

ONE ~ GIRDER ~ 4G4A

NOTES:
1. FOR GENERAL NOTES SEE SHEET GN1.
2. FOR FIELD SPLICE DETAILS SEE SHEET X1.
3. FOR GIRDER STANDARD DETAILS SEE SHEET X1.
4. FOR CAMBER & FLANGE DIAGRAM SEE SHEET C1.
5. T2 - DENOTES CHARPY V-NOTCH TESTING REQUIRED.

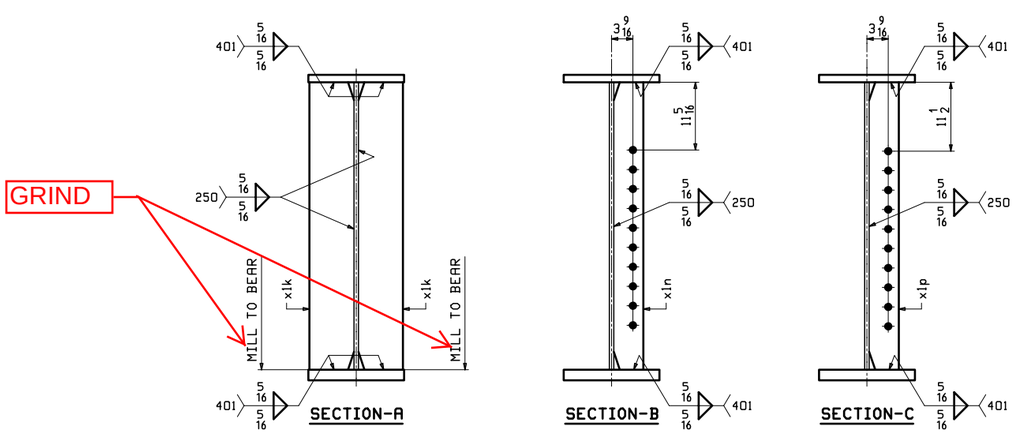

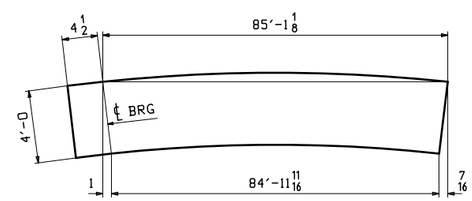

REV.	DATE	REMARKS	DWN	CHK	APVL	SHOP
0						

MATERIAL:	SURFACE PREP. & PAINT:	HOLES:	SHOP BOLTS:
M270-50W	SEE GN1	15/16"Ø U.N.	NONE

DESCRIPTION: GIRDER ~ 4G4A

CASCO BAY STEEL STRUCTURES, INC.
1 WALLACE AVE. PHONE (207) 780-6722
SOUTH PORTLAND, ME 04106 FAX. (207) 780-6726
TENSOR 3161

STRUCTURE: VT 100 OVER WARDSBORO BROOK BRIDGE NO 78 WINDHAM COUNTY	DRAWN: EEO	DATE: 02/01	
	CHKD: DBH	DATE: 02/27	
LOCATION: TOWN OF JAMAICA, VT	JOB NO.	DWG NO.	
PROJ NO. ER-BRF 013-1(16)	529-1	4	
CUSTOMER: T. BUCK CONSTRUCTION		REV.	

Vermont Agency of Transportation
RECEIVED
Version EN-BRF 013-1(16) Structural Steel Shop Drawings_Stamped Approved Revised 2-2-2013.pdf
CK'D BY GML/JWC OK'D BY GG
March 6, 2013
RESUBMIT NO Approved AsNoted
BY KMH DATE 04/02/13

EEO Fri Mar 1, 2013 08:45:35 AM c:\work\529\529\14 Rev0

ABM INFO		SHIP	BILL OF MATERIAL					JOB NO.	DRAWING NO.	REV.
								529-1	5	
PAGE	LINE	MARK	QTY	MARK	MATERIAL	LENGTH FT	LENGTH INCHES	REMARKS	WT	PROCUREMENT NOTES
		5G1B	1		GIRDER				26336	
1	L		1	wa	PL $\frac{5}{8}$x48	70	0	M270-50WT2	7146	
1	C		1	ta	PL $2\frac{1}{4}$x16	69	$11\frac{3}{8}$	M270-50WT2	8569	
1	A		1	ba	PL $2\frac{3}{4}$x16	70	0	M270-50WT2	10481	
2	M		2	x1m	PL $\frac{1}{2}$x5	4	0		34	
2	N		1	x1s	PL $\frac{1}{4}$x$4\frac{3}{4}$	0	$10\frac{7}{8}$		4	
2	R		80		STUD $\frac{3}{4}$ ø	0	6	A108	.86	

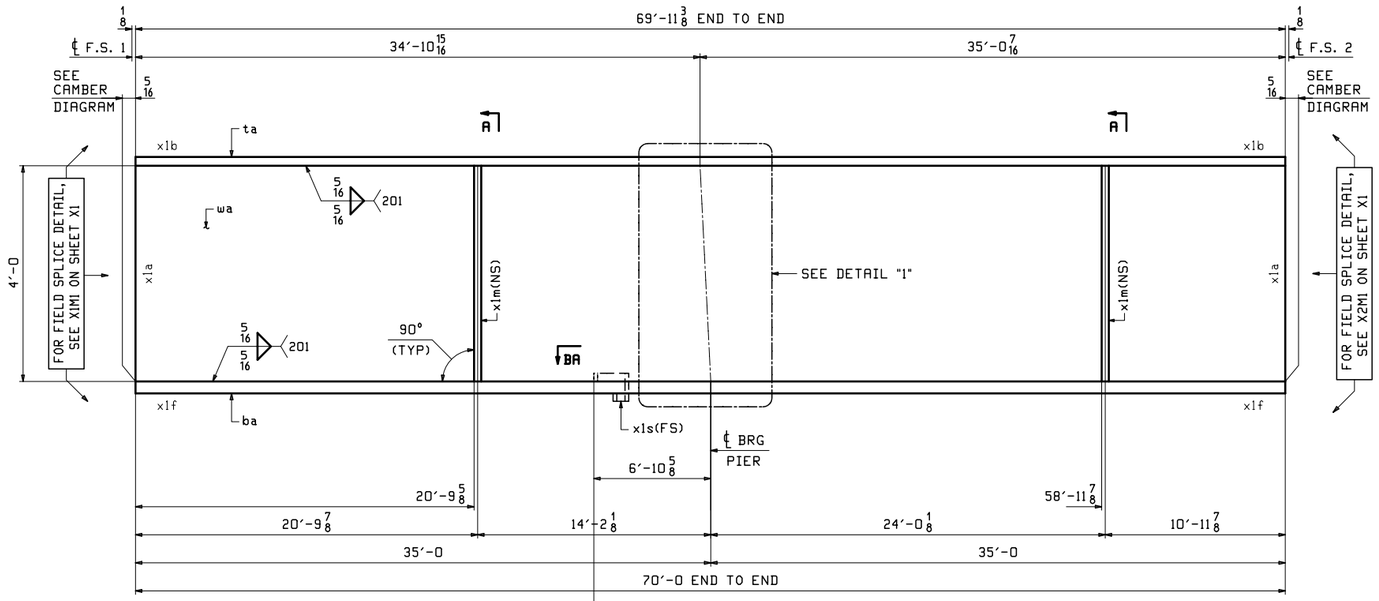

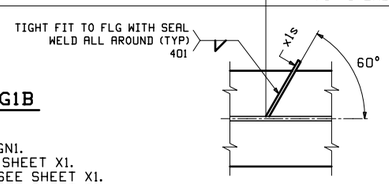

ONE ~ GIRDER ~ 5G1B

NOTES:
1. FOR GENERAL NOTES SEE SHEET GN1.
2. FOR FIELD SPLICE DETAILS SEE SHEET X1.
3. FOR GIRDER STANDARD DETAILS SEE SHEET X1.
4. FOR CAMBER & FLANGE DIAGRAM SEE SHEET C1.
5. T2 - DENOTES CHARPY V-NOTCH TESTING REQUIRED.

SECTION-BA

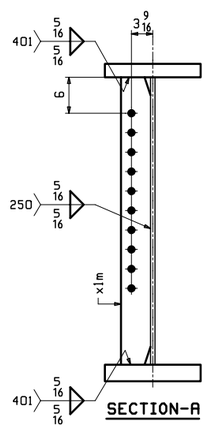

SECTION-A

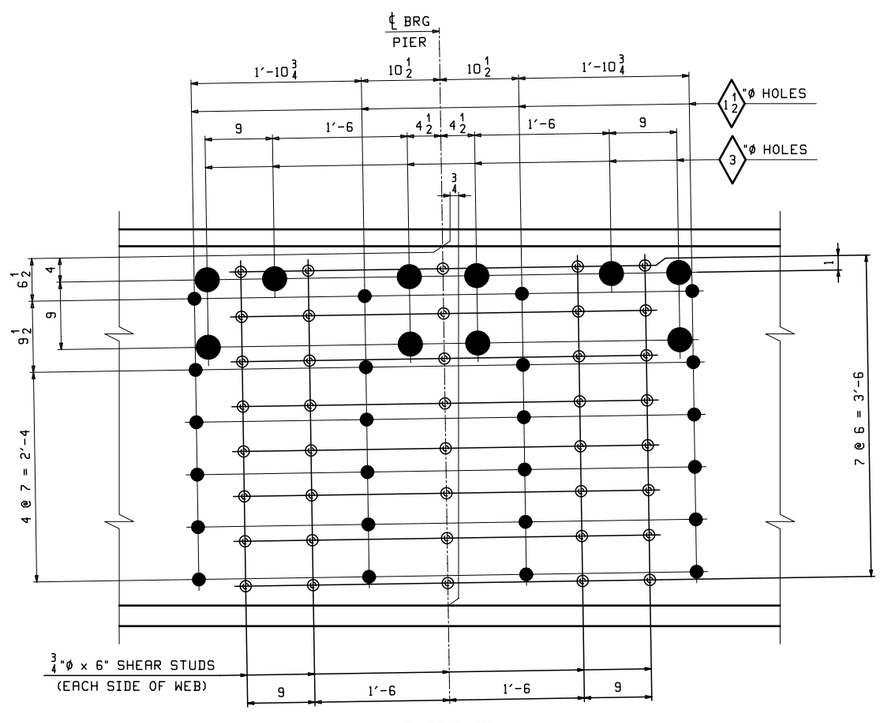

DETAIL "1"

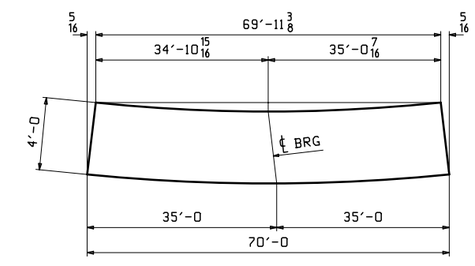

ORIENTATION DIAGRAM

Vermont Agency of Transportation
RECEIVED
CK'D BY GML/JWC OK'D BY GG
March 6, 2013
RESUBMIT Approved
BY KMH DATE 03/18/13

REV.	DATE	REMARKS	DWN	CHK	APVL	SHOP
0						

MATERIAL:	SURFACE PREP. & PAINT:	HOLES:	SHOP BOLTS:
M270-50W	SEE GN1	$\frac{15}{16}$"ø U.N.	NONE

DESCRIPTION: GIRDER ~ 5G1B

CASCO BAY STEEL STRUCTURES, INC.
1 WALLACE AVE. PHONE (207) 780-6722
SOUTH PORTLAND, ME 04106 FAX. (207) 780-6726
TENSOR 3161

STRUCTURE: VT 100 OVER WARDSBORO BROOK BRIDGE NO 78 WINDHAM COUNTY	DRAWN: EEO	DATE: 02/01	
	CHKD: DBH	DATE: 02/27	
LOCATION: TOWN OF JAMAICA, VT	JOB NO.	DWG NO.	
PROJ NO. ER-BRF 013-1(16)	529-1	5	
CUSTOMER: T. BUCK CONSTRUCTION		REV.	

ABM INFO		SHIP	BILL OF MATERIAL					JOB NO.	DRAWING NO.	REV.
								529-1	6	
PAGE	LINE	MARK	QTY	MARK	MATERIAL	LENGTH FT	LENGTH INCHES	REMARKS	WT	PROCUREMENT NOTES
		6G2B	1		GIRDER				26400	
1	L		1	wa	PL $\frac{5}{8}$x48	70	0	M270-50WT2	7146	
1	C		1	ta	PL $2\frac{1}{4}$x16	69	$11\frac{3}{8}$	M270-50WT2	8569	
1	A		1	ba	PL $2\frac{3}{4}$x16	70	0	M270-50WT2	10481	
2	M		2	x1m	PL $\frac{1}{2}$x5	4	0		34	
2	M		1	x1n	PL $\frac{1}{2}$x5	4	0		34	
2	M		1	x1p	PL $\frac{1}{2}$x5	4	0		34	
2	R		80		STUD $\frac{3}{4}$ ø	0	6	A108	.86	

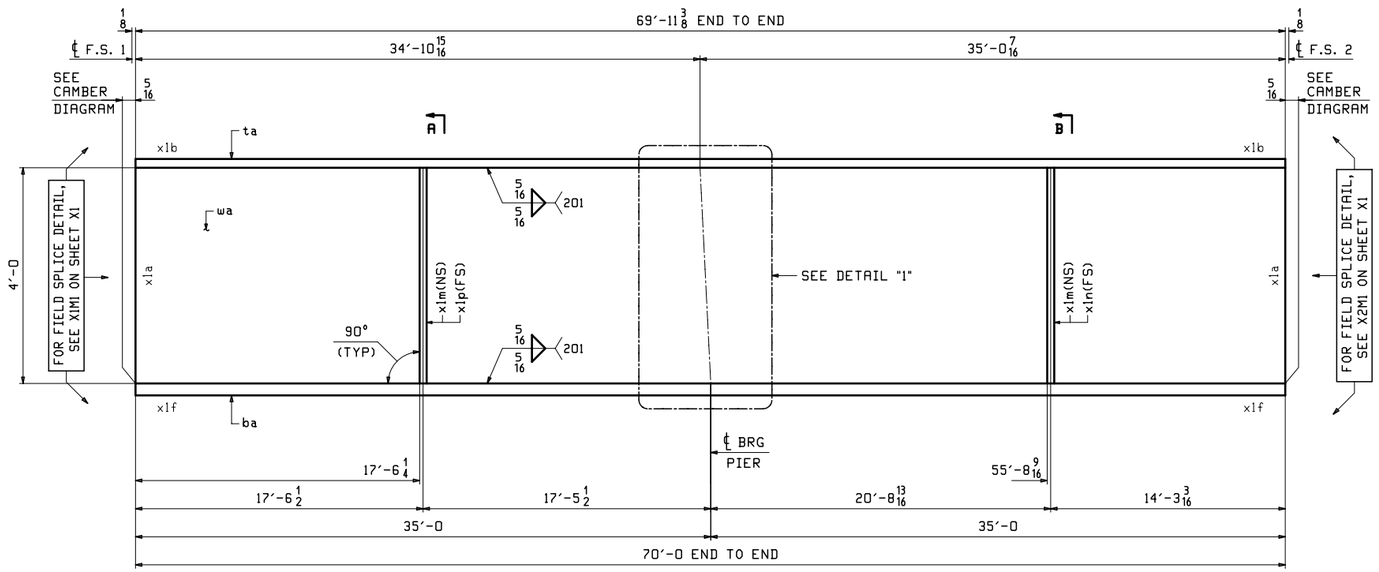

ONE ~ GIRDER ~ 6G2B

NOTES:
1. FOR GENERAL NOTES SEE SHEET GN1.
2. FOR FIELD SPLICE DETAILS SEE SHEET X1.
3. FOR GIRDER STANDARD DETAILS SEE SHEET X1.
4. FOR CAMBER & FLANGE DIAGRAM SEE SHEET C1.
5. T2 - DENOTES CHARPY V-NOTCH TESTING REQUIRED.

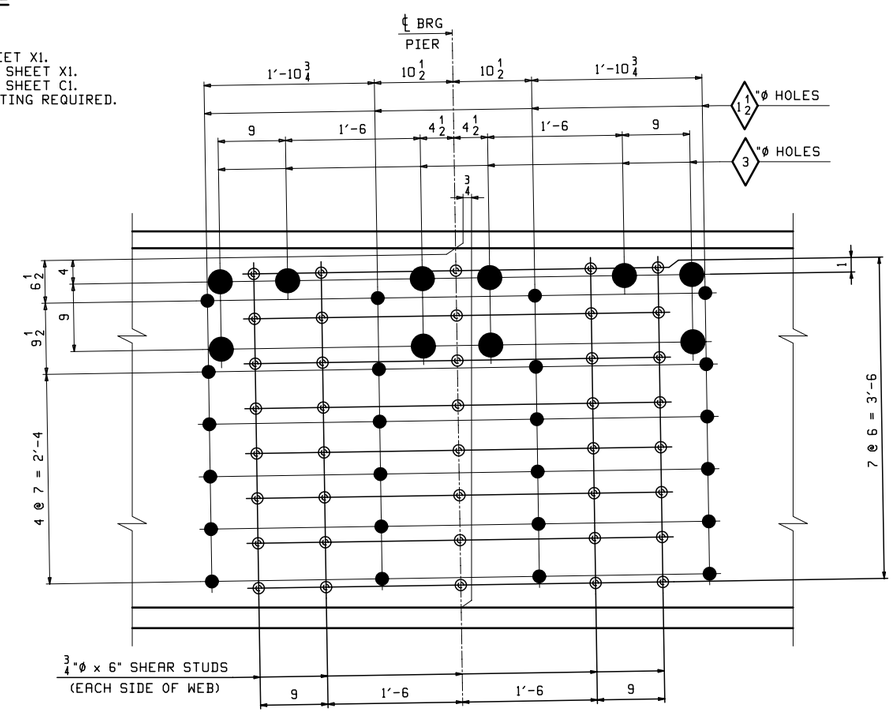

DETAIL "1"

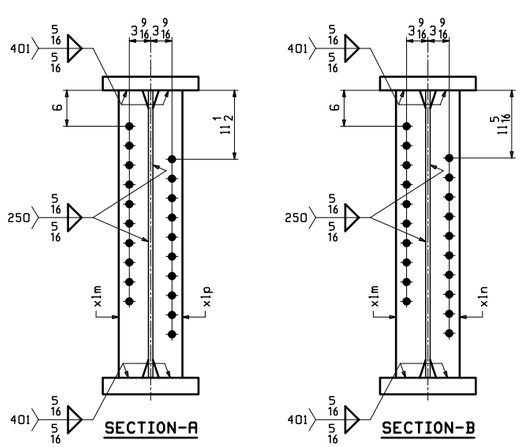

SECTION-A

SECTION-B

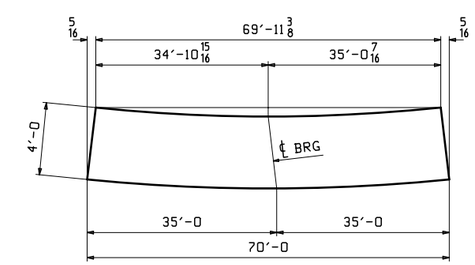

ORIENTATION DIAGRAM

Vermont Agency of Transportation
RECEIVED
CK'D BY GML/JWC OK'D BY GG
March 6, 2013
RESUBMIT Approved
BY KMH DATE 03/18/13

REV.	DATE	REMARKS	DWN	CHK	APVL	SHOP
0						

MATERIAL:	SURFACE PREP. & PAINT:	HOLES:	SHOP BOLTS:
M270-50W	SEE GN1	$\frac{15}{16}$"ø U.N.	NONE

DESCRIPTION: GIRDER ~ 6G2B

CASCO BAY STEEL STRUCTURES, INC.
1 WALLACE AVE. PHONE (207) 780-6722
SOUTH PORTLAND, ME 04106 FAX. (207) 780-6726
TENSOR 3161

STRUCTURE:	VT 100 OVER WARDSBORO BROOK BRIDGE NO 78 WINDHAM COUNTY	DRAWN: EEO	DATE: 02/01
		CHKD: DBH	DATE: 02/27
LOCATION:	TOWN OF JAMAICA, VT	JOB NO.	DWG NO.
PROJ NO.	ER-BRF 013-1(16)	529-1	6
CUSTOMER:	T. BUCK CONSTRUCTION		REV. △

ABM INFO		SHIP	BILL OF MATERIAL					JOB NO.	DRAWING NO.	REV.
								529-1	7	
PAGE	LINE	MARK	QTY	MARK	MATERIAL	LENGTH FT	LENGTH INCHES	REMARKS	WT	PROCUREMENT NOTES
		7G3B	1		GIRDER				26400	
1	L		1	wa	PL $\frac{5}{8}$x48	70	0	M270-50WT2	7146	
1	C		1	ta	PL $2\frac{1}{4}$x16	69	$11\frac{3}{8}$	M270-50WT2	8569	
1	A		1	ba	PL $2\frac{3}{4}$x16	70	0	M270-50WT2	10481	
2	M		2	x1m	PL $\frac{1}{2}$x5	4	0		34	
2	M		1	x1n	PL $\frac{1}{2}$x5	4	0		34	
2	M		1	x1p	PL $\frac{1}{2}$x5	4	0		34	
2	R		80		STUD $\frac{3}{4}$ ø	0	6	A108	.86	

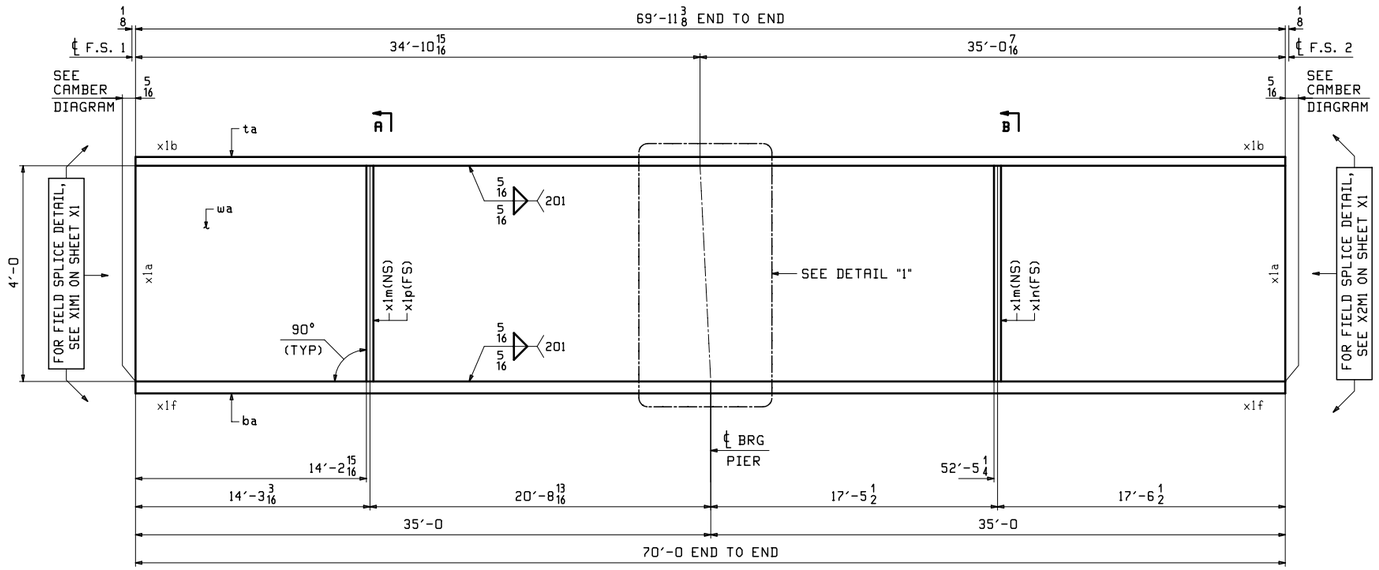

ONE ~ GIRDER ~ 7G3B

NOTES:
1. FOR GENERAL NOTES SEE SHEET GN1.
2. FOR FIELD SPLICE DETAILS SEE SHEET X1.
3. FOR GIRDER STANDARD DETAILS SEE SHEET X1.
4. FOR CAMBER & FLANGE DIAGRAM SEE SHEET C1.
5. T2 - DENOTES CHARPY V-NOTCH TESTING REQUIRED.

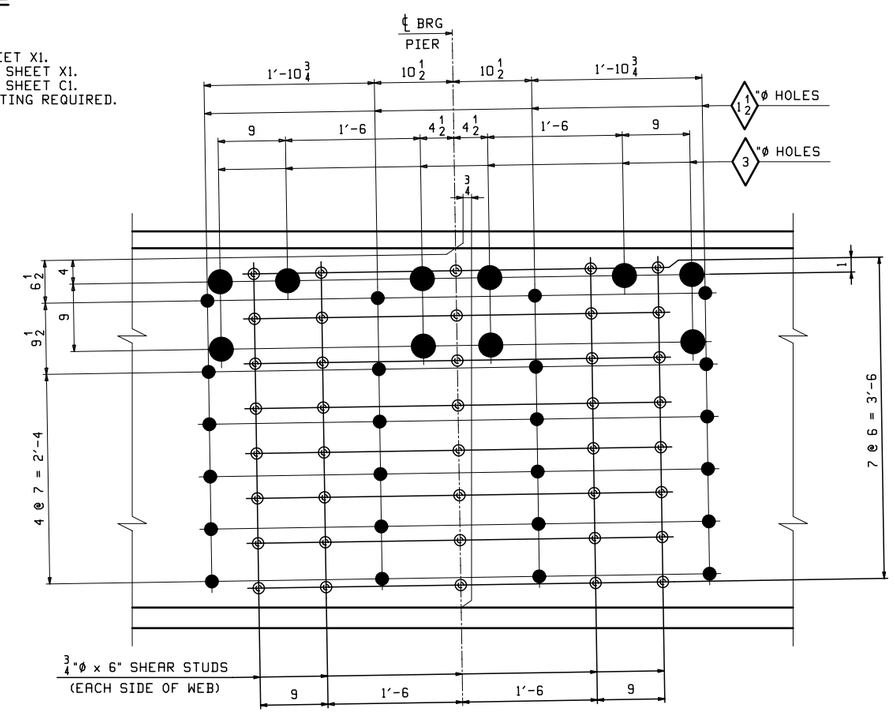

DETAIL "1"

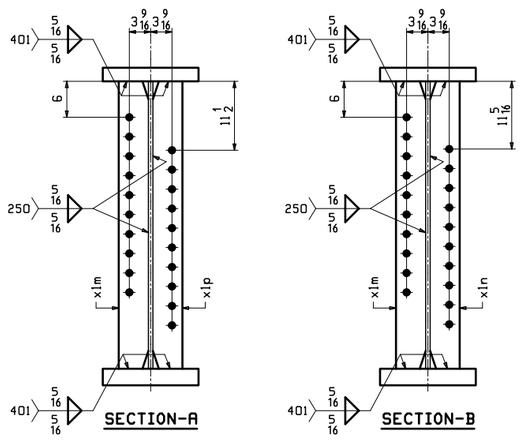

SECTION-A

SECTION-B

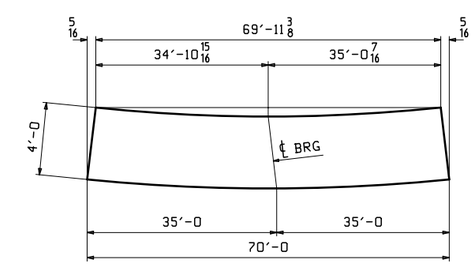

ORIENTATION DIAGRAM

Vermont Agency of Transportation
RECEIVED
CK'D BY GML/JWC OK'D BY GG
March 6, 2013
RESUBMIT Approved
BY KMH DATE 03/18/13

REV.	DATE	REMARKS	DWN	CHK	APVL	SHOP
0						

MATERIAL:	SURFACE PREP. & PAINT:	HOLES:	SHOP BOLTS:
M270-50W	SEE GN1	$\frac{15}{16}$"ø U.N.	NONE

DESCRIPTION: GIRDER ~ 7G3B

CASCO BAY STEEL STRUCTURES, INC.
1 WALLACE AVE. PHONE (207) 780-6722
SOUTH PORTLAND, ME 04106 FAX. (207) 780-6726
TENSOR 3161

STRUCTURE:	VT 100 OVER WARDSBORO BROOK BRIDGE NO 78 WINDHAM COUNTY	DRAWN: EEO	DATE: 02/04
		CHKD: DBH	DATE: 02/27
LOCATION:	TOWN OF JAMAICA, VT	JOB NO.	DWG NO.
PROJ NO.	ER-BRF 013-1(16)	529-1	7
CUSTOMER:	T. BUCK CONSTRUCTION		REV. △

ABM INFO		SHIP	BILL OF MATERIAL					JOB NO. 529-1	DRAWING NO. 8	REV.
PAGE	LINE	MARK	QTY	MARK	MATERIAL	LENGTH FT	LENGTH INCHES	REMARKS	WT	PROCUREMENT NOTES
		8G4B	1		GIRDER				26336	
1	L		1	wa	PL $\frac{5}{8}$x48	70	0	M270-50WT2	7146	
1	C		1	ta	PL $2\frac{1}{4}$x16	69	$11\frac{3}{8}$	M270-50WT2	8569	
1	A		1	ba	PL $2\frac{3}{4}$x16	70	0	M270-50WT2	10481	
2	M		1	x1n	PL $\frac{1}{2}$x5	4	0		34	
2	M		1	x1p	PL $\frac{1}{2}$x5	4	0		34	
2	N		1	x1t	PL $\frac{1}{4}$x$4\frac{3}{4}$	0	$10\frac{7}{8}$		4	
2	R		80		STUD $\frac{3}{4}$ ø	0	6	A108	.86	

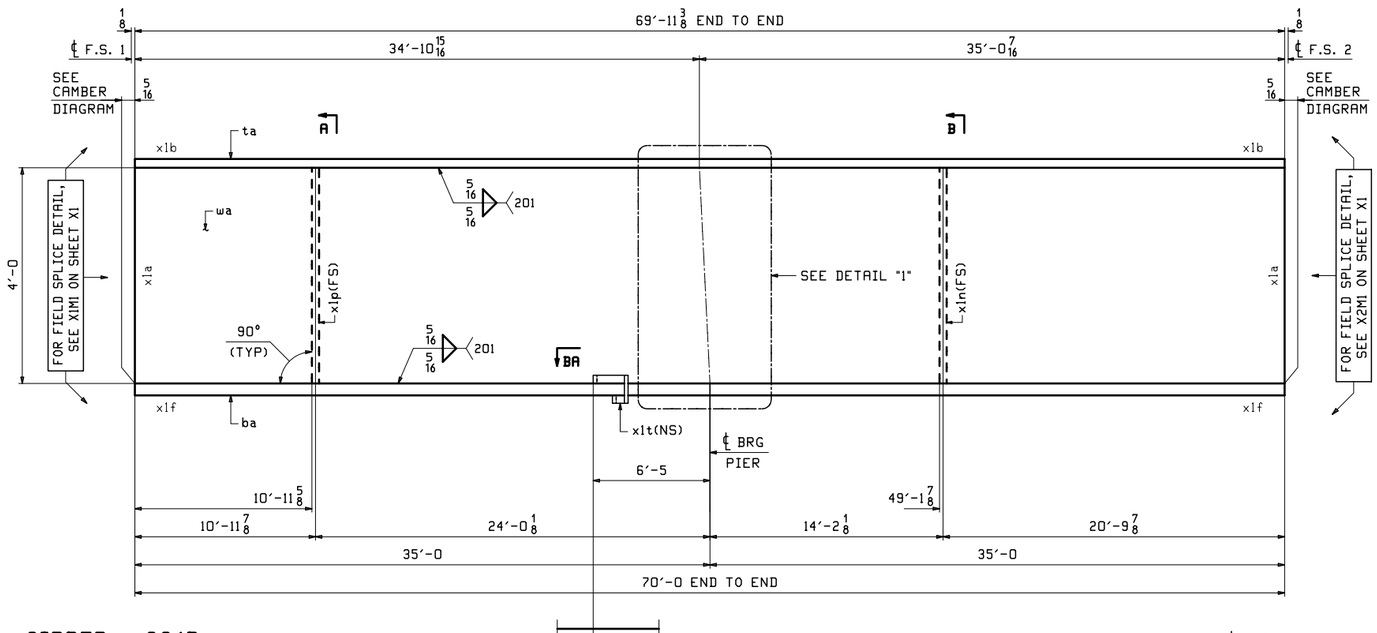

ONE ~ GIRDER ~ 8G4B

NOTES:
1. FOR GENERAL NOTES SEE SHEET GN1.
2. FOR FIELD SPLICE DETAILS SEE SHEET X1.
3. FOR GIRDER STANDARD DETAILS SEE SHEET X1.
4. FOR CAMBER & FLANGE DIAGRAM SEE SHEET C1.
5. T2 - DENOTES CHARPY V-NOTCH TESTING REQUIRED.

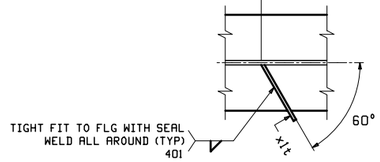

SECTION-BA

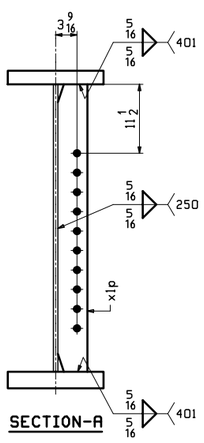

SECTION-A

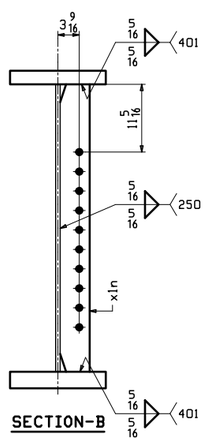

SECTION-B

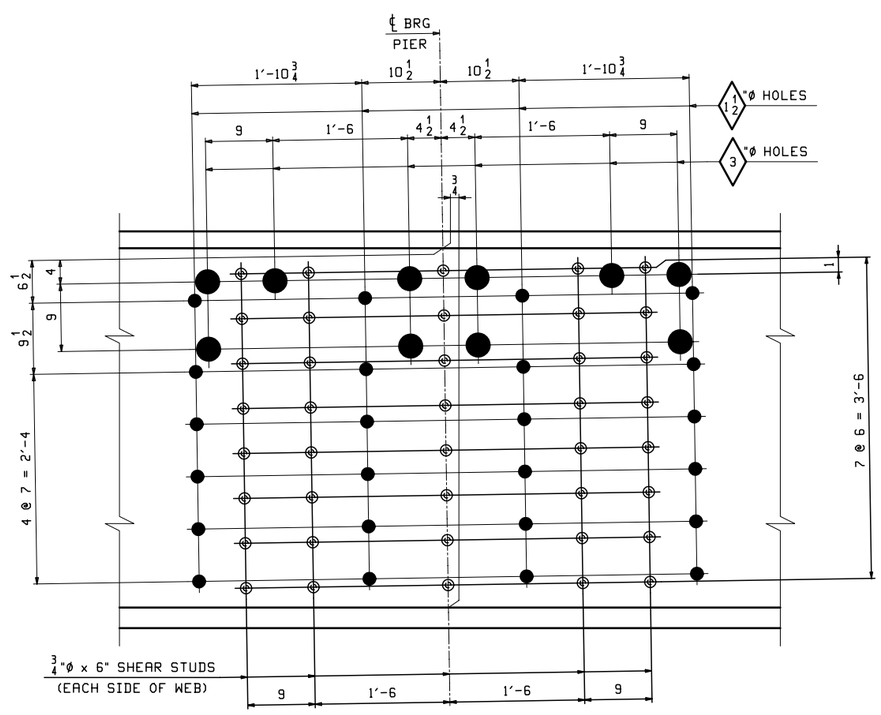

DETAIL "1"

Vermont Agency of Transportation
RECEIVED
Send Shop Drawings.pdf
CK'D BY GML/JWC OK'D BY GG
March 6, 2013
RESUBMIT Approved
BY KMH DATE 03/18/13

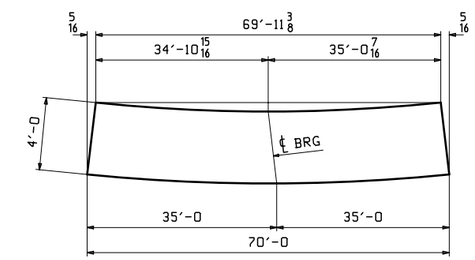

ORIENTATION DIAGRAM

REV.	DATE	REMARKS	DWN	CHK	APVL	SHOP
0						

MATERIAL:	SURFACE PREP. & PAINT:	HOLES:	SHOP BOLTS:
M270-50W	SEE GN1	$\frac{15}{16}$"ø U.N.	NONE

DESCRIPTION: GIRDER ~ 8G4B

CASCO BAY STEEL STRUCTURES, INC.
1 WALLACE AVE. PHONE (207) 780-6722
SOUTH PORTLAND, ME 04106 FAX. (207) 780-6726
TENSOR 3161

STRUCTURE: VT 100 OVER WARDSBORO BROOK BRIDGE NO 78 WINDHAM COUNTY	DRAWN: EEO	DATE: 02/04	
	CHKD: DBH	DATE: 02/27	
LOCATION: TOWN OF JAMAICA, VT	JOB NO. 529-1	DWG NO. 8	
PROJ NO. ER-BRF 013-1(16)			
CUSTOMER: T. BUCK CONSTRUCTION		REV. △	

EEO Fri Mar 1, 2013 08:50:08 AM C:\work\jobs\2501\8.1 Rev0

ABM INFO		SHIP	BILL OF MATERIAL					JOB NO.	DRAWING NO.	REV.
								529-1	9	
PAGE	LINE	MARK	QTY	MARK	MATERIAL	LENGTH FT	LENGTH INCHES	REMARKS	WT	PROCUREMENT NOTES
		9G1C	1		GIRDER				22942	
1	J		1	wa	PL $\frac{5}{8}$x48	85	$4\frac{3}{4}$	M270-50WT2	8718	
1	G		1	ta	PL $1\frac{1}{4}$x16	85	$4\frac{3}{16}$	M270-50WT2	5808	
1	E		1	ba	PL $1\frac{3}{4}$x16	85	$4\frac{5}{16}$	M270-50WT2	8133	
2	L		2	x1k	PL $\frac{7}{8}$x$7\frac{1}{2}$	4	0		89	
2	M		3	x1m	PL $\frac{1}{2}$x5	4	0		34	
2	N		1	x1v	PL $\frac{1}{4}$x$3\frac{3}{4}$	0	$10\frac{7}{8}$		3	

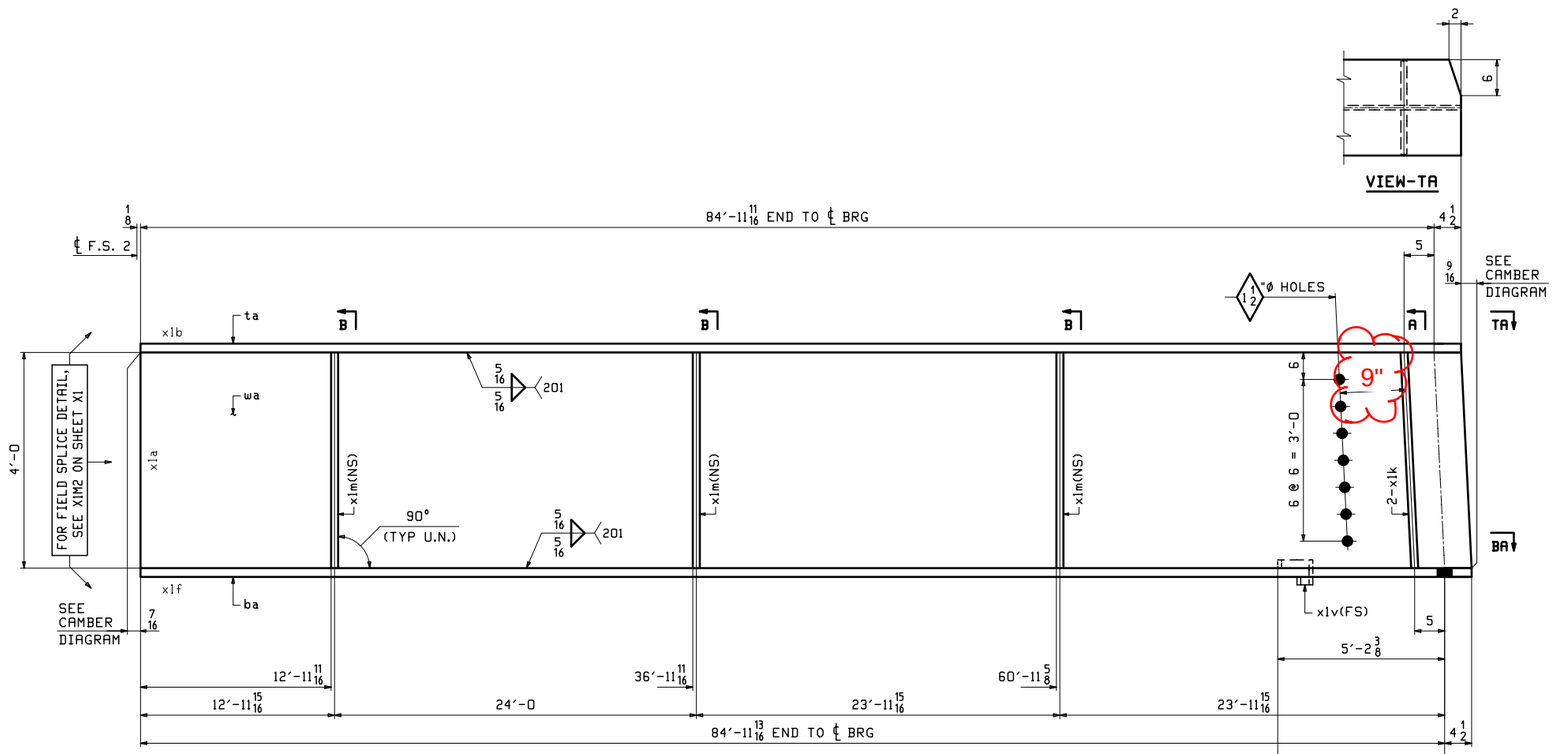

ONE ~ GIRDER ~ 9G1C

NOTES:
1. FOR GENERAL NOTES SEE SHEET GN1.
2. FOR FIELD SPLICE DETAILS SEE SHEET X1.
3. FOR GIRDER STANDARD DETAILS SEE SHEET X1.
4. FOR CAMBER & FLANGE DIAGRAM SEE SHEET C1.
5. T2 - DENOTES CHARPY V-NOTCH TESTING REQUIRED.

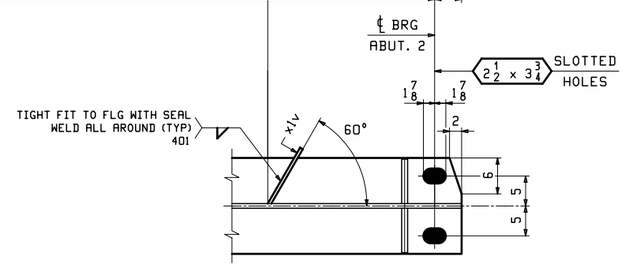

SECTION-BA

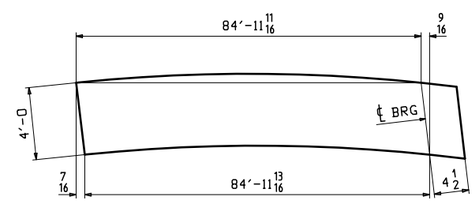

ORIENTATION DIAGRAM

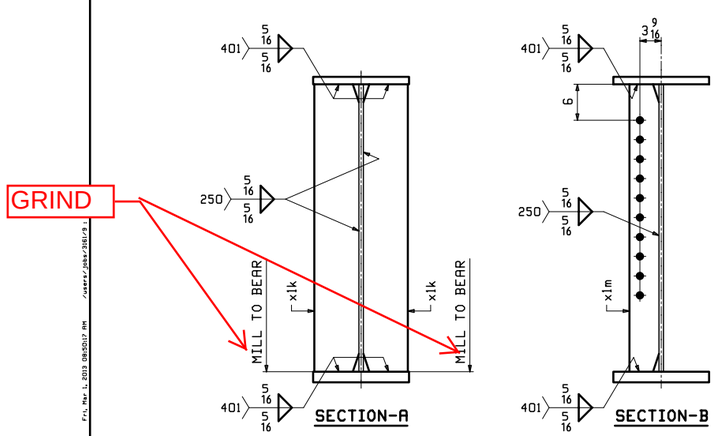

SECTION-A

SECTION-B

Vermont Agency of Transportation
RECEIVED
CK'D BY GML/JWC OK'D BY GG
March 6, 2013
RESUBMIT NO Approved AsNoted
BY KMH DATE 04/02/13

REV.	DATE	REMARKS	DWN	CHK	APVL	SHOP
0						

MATERIAL:	SURFACE PREP. & PAINT:	HOLES:	SHOP BOLTS:
M270-50W	SEE GN1	$\frac{15}{16}$"Ø U.N.	NONE

DESCRIPTION: GIRDER ~ 9G1C

CASCO BAY STEEL STRUCTURES, INC.
1 WALLACE AVE. PHONE (207) 780-6722
SOUTH PORTLAND, ME 04106 FAX. (207) 780-6726
TENSOR 3161

STRUCTURE:	VT 100 OVER WARDSBORO BROOK BRIDGE NO 78 WINDHAM COUNTY	DRAWN: EEO	DATE: 02/04
		CHKD: DBH	DATE: 02/27
LOCATION:	TOWN OF JAMAICA, VT	JOB NO.	DWG NO.
PROJ NO.	ER-BRF 013-1(16)	529-1	9
CUSTOMER:	T. BUCK CONSTRUCTION		REV. △

ABM INFO		SHIP	BILL OF MATERIAL					JOB NO.	DRAWING NO.	REV.
								529-1	10	
PAGE	LINE	MARK	QTY	MARK	MATERIAL	LENGTH FT	LENGTH INCHES	REMARKS	WT	PROCUREMENT NOTES
		10G2C	1		GIRDER				23076	
1	J		1	wa	PL $\frac{5}{8}$x48	85	$4\frac{3}{4}$	M270-50WT2	8718	
1	G		1	ta	PL $1\frac{1}{4}$x16	85	$4\frac{3}{16}$	M270-50WT2	5808	
1	E		1	ba	PL $1\frac{3}{4}$x16	85	$4\frac{5}{16}$	M270-50WT2	8133	
2	L		2	x1k	PL $\frac{7}{8}$x$7\frac{1}{2}$	4	0		89	
2	M		4	x1m	PL $\frac{1}{2}$x5	4	0		34	
2	M		2	x1n	PL $\frac{1}{2}$x5	4	0		34	
2	M		1	x1p	PL $\frac{1}{2}$x5	4	0		34	

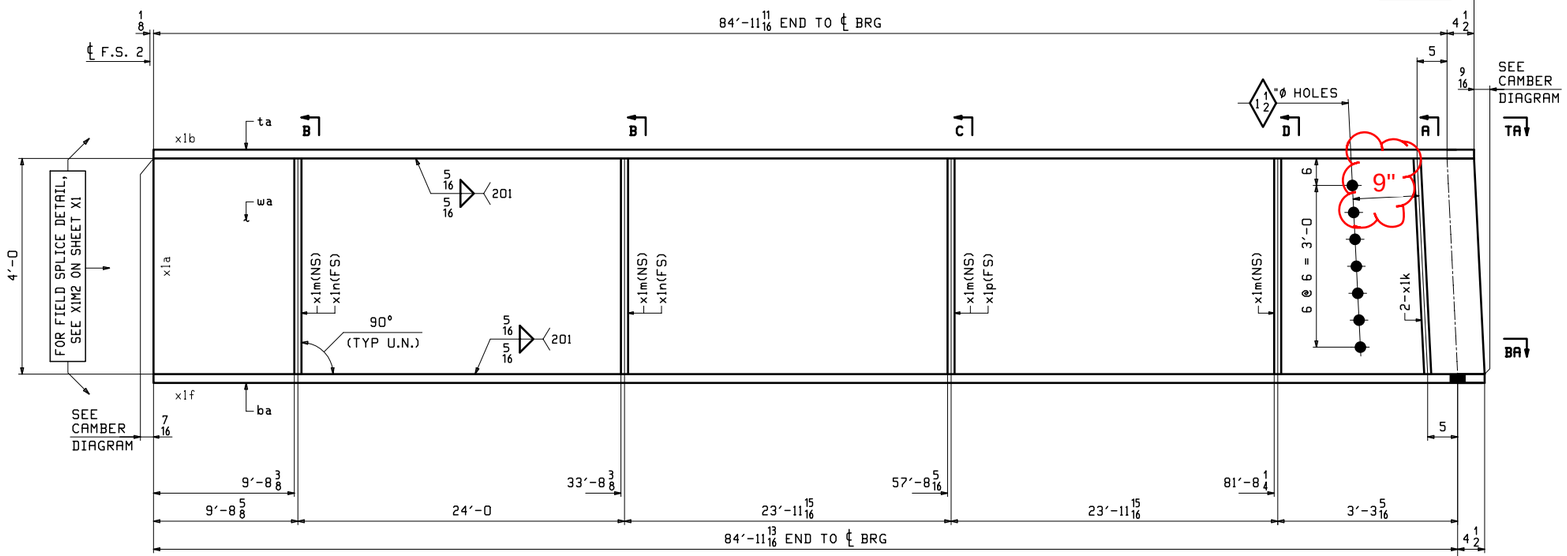

ONE ~ GIRDER ~ 10G2C

NOTES:
1. FOR GENERAL NOTES SEE SHEET GN1.
2. FOR FIELD SPLICE DETAILS SEE SHEET X1.
3. FOR GIRDER STANDARD DETAILS SEE SHEET X1.
4. FOR CAMBER & FLANGE DIAGRAM SEE SHEET C1.
5. T2 - DENOTES CHARPY V-NOTCH TESTING REQUIRED.

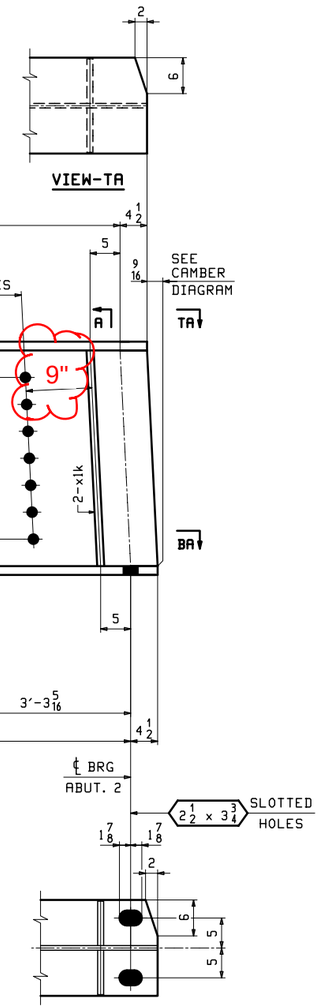

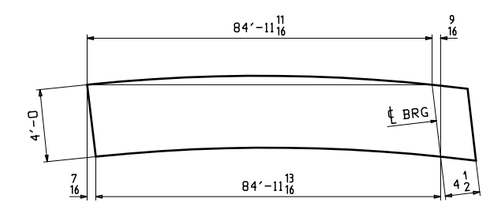

ORIENTATION DIAGRAM

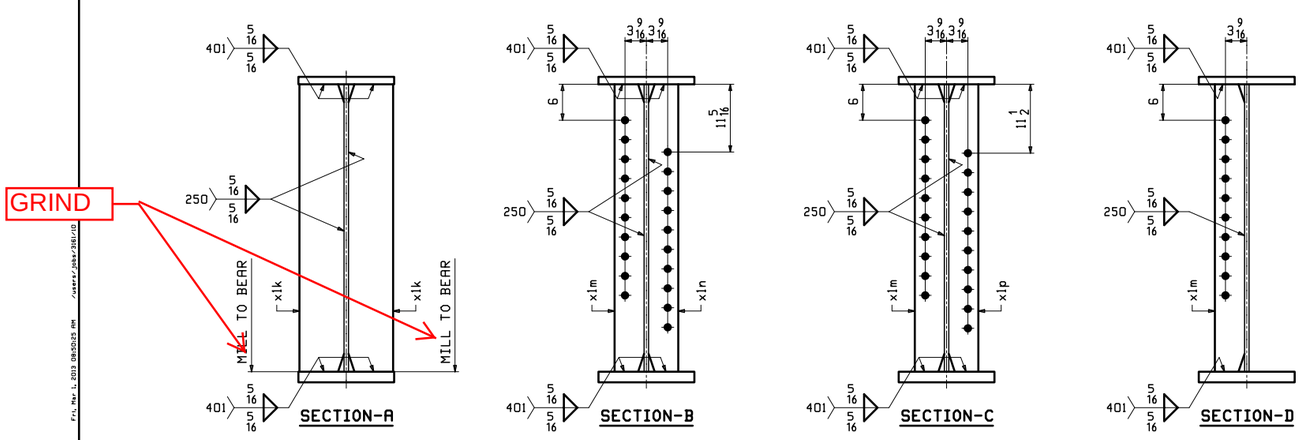

REV.	DATE	REMARKS	DWN	CHK	APVL	SHOP
0						

MATERIAL:	SURFACE PREP. & PAINT:	HOLES:	SHOP BOLTS:
M270-50W	SEE GN1	$\frac{15}{16}$"Ø U.N.	NONE

DESCRIPTION: GIRDER ~ 10G2C

CASCO BAY STEEL STRUCTURES, INC.
1 WALLACE AVE. PHONE (207) 780-6722
SOUTH PORTLAND, ME 04106 FAX. (207) 780-6726
TENSOR 3161

STRUCTURE: VT 100 OVER WARDSBORO BROOK BRIDGE NO 78 WINDHAM COUNTY	DRAWN: EEO	DATE: 02/04	
	CHKD: DBH	DATE: 02/27	
LOCATION: TOWN OF JAMAICA, VT	JOB NO.	DWG NO.	
PROJ NO. ER-BRF 013-1(16)	529-1	10	
CUSTOMER: T. BUCK CONSTRUCTION		REV. △	

Vermont Agency of Transportation
RECEIVED
CK'D BY GML/JWC OK'D BY GG
March 6, 2013
RESUBMIT NO Approved AsNoted
BY KMH DATE 04/02/13

EEO Fri, Mar 1, 2013 09:50:25 AM

ABM INFO		SHIP	BILL OF MATERIAL						JOB NO.	DRAWING NO.	REV.
									529-1	11	
PAGE	LINE	MARK	QTY	MARK	MATERIAL	LENGTH FT	LENGTH INCHES	REMARKS	WT	PROCUREMENT NOTES	
		11G3C	1		GIRDER				23110		
1	J		1	wa	PL $\frac{5}{8}$x48	85	$4\frac{3}{4}$	M270-50WT2	8718		
1	G		1	ta	PL $1\frac{1}{4}$x16	85	$4\frac{3}{16}$	M270-50WT2	5808		
1	E		1	ba	PL $1\frac{3}{4}$x16	85	$4\frac{5}{16}$	M270-50WT2	8133		
2	L		2	x1k	PL $\frac{7}{8}$x$7\frac{1}{2}$	4	0		89		
2	M		4	x1m	PL $\frac{1}{2}$x5	4	0		34		
2	M		2	x1n	PL $\frac{1}{2}$x5	4	0		34		
2	M		2	x1p	PL $\frac{1}{2}$x5	4	0		34		

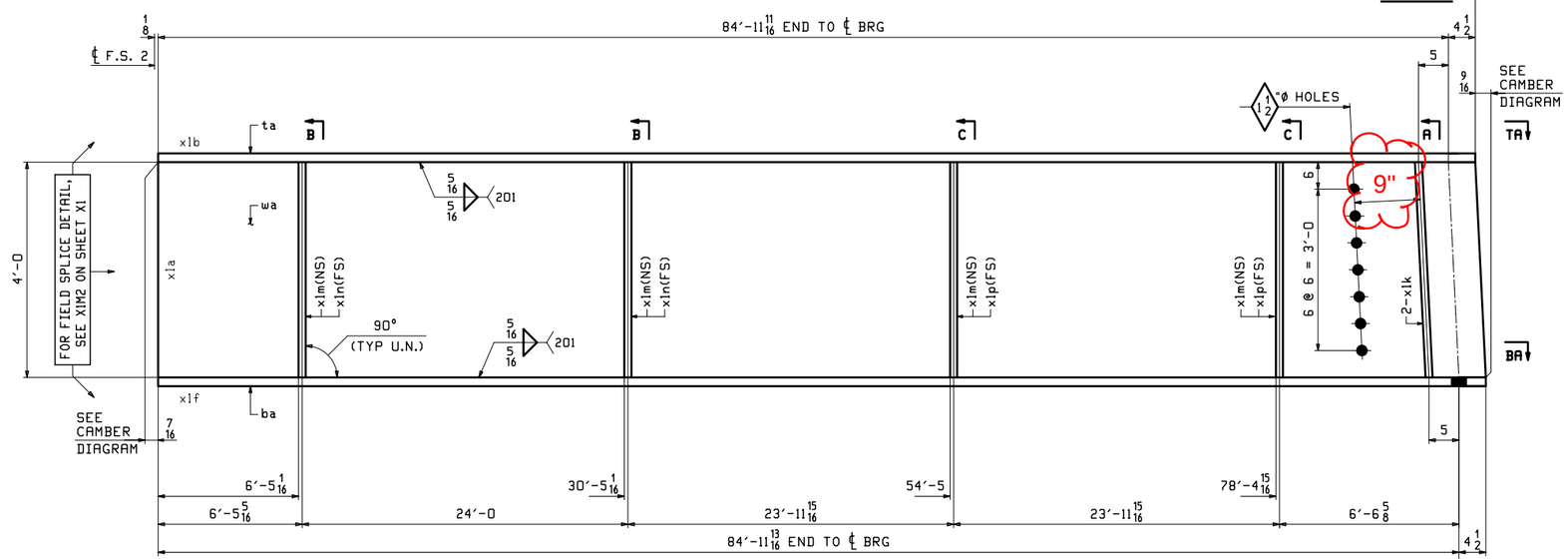

ONE ~ GIRDER ~ 11G3C

NOTES:
1. FOR GENERAL NOTES SEE SHEET GN1.
2. FOR FIELD SPLICE DETAILS SEE SHEET X1.
3. FOR GIRDER STANDARD DETAILS SEE SHEET X1.
4. FOR CAMBER & FLANGE DIAGRAM SEE SHEET C1.
5. T2 - DENOTES CHARPY V-NOTCH TESTING REQUIRED.

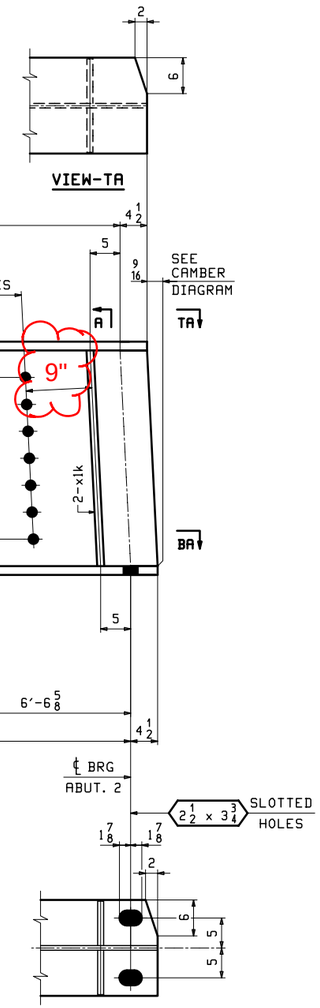

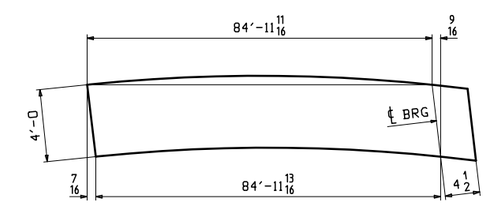

ORIENTATION DIAGRAM

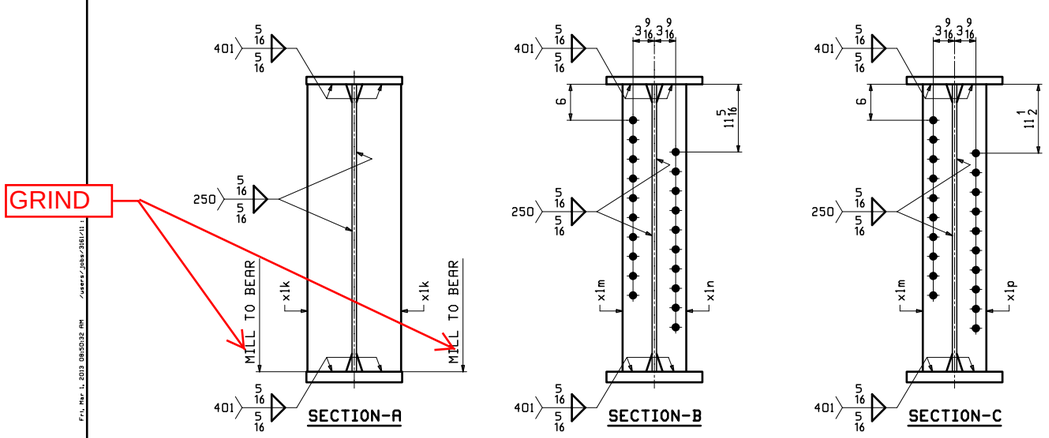

REV.	DATE	REMARKS	DWN	CHK	APVL	SHOP
0						

MATERIAL:	SURFACE PREP. & PAINT:	HOLES:	SHOP BOLTS:
M270-50W	SEE GN1	$\frac{15}{16}$"Ø U.N.	NONE

DESCRIPTION: GIRDER ~ 11G3C

CASCO BAY STEEL STRUCTURES, INC.
1 WALLACE AVE. PHONE (207) 780-6722
SOUTH PORTLAND, ME 04106 FAX. (207) 780-6726
TENSOR 3161

STRUCTURE: VT 100 OVER WARDSBORO BROOK BRIDGE NO 78 WINDHAM COUNTY	DRAWN: EEO	DATE: 02/04	
	CHKD: DBH	DATE: 02/27	
LOCATION: TOWN OF JAMAICA, VT	JOB NO.	DWG NO.	
PROJ NO. ER-BRF 013-1(16)	529-1	11	
CUSTOMER: T. BUCK CONSTRUCTION		REV. △	

Vermont Agency of Transportation
RECEIVED
CK'D BY GML/JWC OK'D BY GG
March 6, 2013
RESUBMIT NO Approved AsNoted
BY KMH DATE 04/02/13

EEO Fri, Mar 1, 2013 09:50:32 AM /users/jdk/3161/1

ABM INFO		SHIP	BILL OF MATERIAL					JOB NO.	DRAWING NO.	REV.
								529-1	12	
PAGE	LINE	MARK	QTY	MARK	MATERIAL	LENGTH FT	LENGTH INCHES	REMARKS	WT	PROCUREMENT NOTES
		12G4C	1		GIRDER				22976	
1	J		1	wa	PL $\frac{5}{8}$x48	85	$4\frac{3}{4}$	M270-50WT2	8718	
1	G		1	ta	PL $1\frac{1}{4}$x16	85	$4\frac{3}{16}$	M270-50WT2	5808	
1	E		1	ba	PL $1\frac{3}{4}$x16	85	$4\frac{5}{16}$	M270-50WT2	8133	
2	L		2	x1k	PL $\frac{7}{8}$x$7\frac{1}{2}$	4	0		89	
2	M		2	x1n	PL $\frac{1}{2}$x5	4	0		34	
2	M		2	x1p	PL $\frac{1}{2}$x5	4	0		34	
2	N		1	x1w	PL $\frac{1}{4}$x$3\frac{3}{4}$	0	$10\frac{7}{8}$		3	

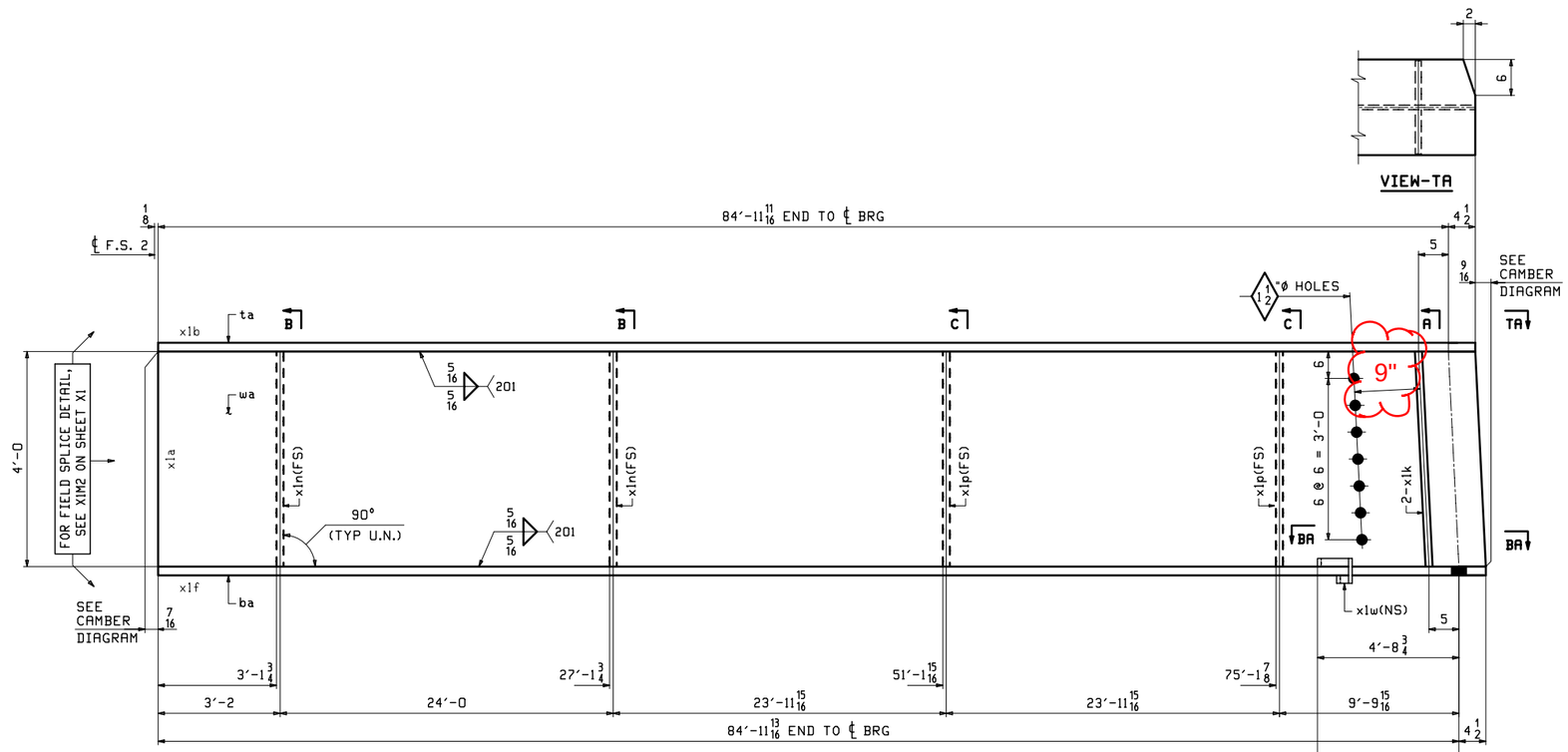

ONE ~ GIRDER ~ 12G4C

NOTES:
1. FOR GENERAL NOTES SEE SHEET GN1.
2. FOR FIELD SPLICE DETAILS SEE SHEET X1.
3. FOR GIRDER STANDARD DETAILS SEE SHEET X1.
4. FOR CAMBER & FLANGE DIAGRAM SEE SHEET C1.
5. T2 - DENOTES CHARPY V-NOTCH TESTING REQUIRED.

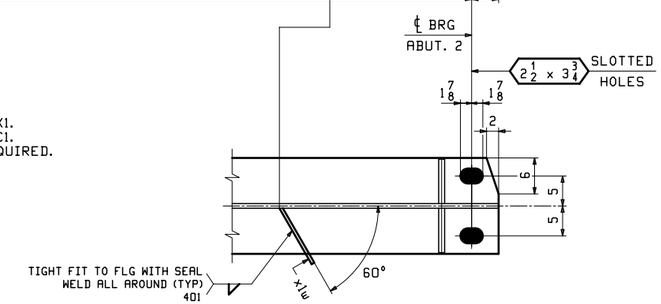

SECTION BA-BA

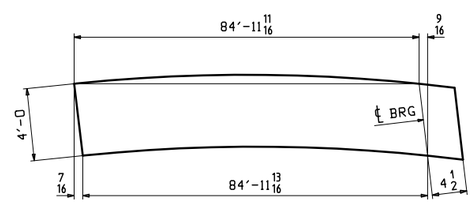

ORIENTATION DIAGRAM

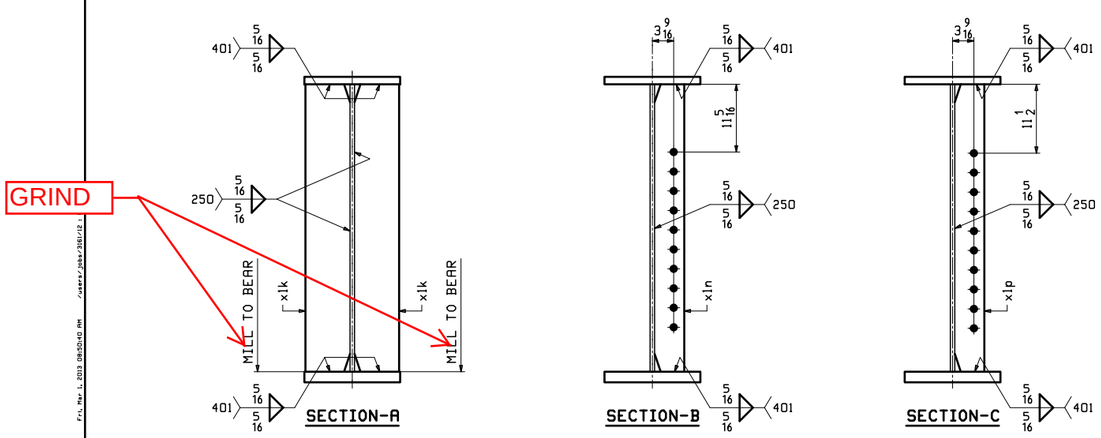

SECTION-A SECTION-B SECTION-C

Vermont Agency of Transportation
RECEIVED
CK'D BY GML/JWC OK'D BY GG
March 6, 2013
RESUBMIT NO Approved AsNoted
BY KMH DATE 04/02/13

REV.	DATE	REMARKS	DWN	CHK	APVL	SHOP
0						

MATERIAL:	SURFACE PREP. & PAINT:	HOLES:	SHOP BOLTS:
M270-50W	SEE GN1	$\frac{15}{16}$"Ø U.N.	NONE

DESCRIPTION: GIRDER ~ 12G4C

CASCO BAY STEEL STRUCTURES, INC.
1 WALLACE AVE. PHONE (207) 780-6722
SOUTH PORTLAND, ME 04106 FAX. (207) 780-6726
TENSOR 3161

STRUCTURE: VT 100 OVER WARDSBORO BROOK BRIDGE NO 78 WINDHAM COUNTY	DRAWN: EEO	DATE: 02/04	
	CHKD: DBH	DATE: 02/27	
LOCATION: TOWN OF JAMAICA, VT	JOB NO.	DWG NO.	
PROJ NO. ER-BRF 013-1(16)	529-1	12	
CUSTOMER: T. BUCK CONSTRUCTION		REV.	

ABM INFO		SHIP	BILL OF MATERIAL					JOB NO.	DRAWING NO.	REV.
								529-1	13	
PAGE	LINE	MARK	QTY	MARK	MATERIAL	LENGTH FT	LENGTH INCHES	REMARKS	WT	PROCUREMENT NOTES
		13D1	28		INT. DIAPHRAGM				1174	
2	U		28		W 36x135	8	8 3/8		1174	

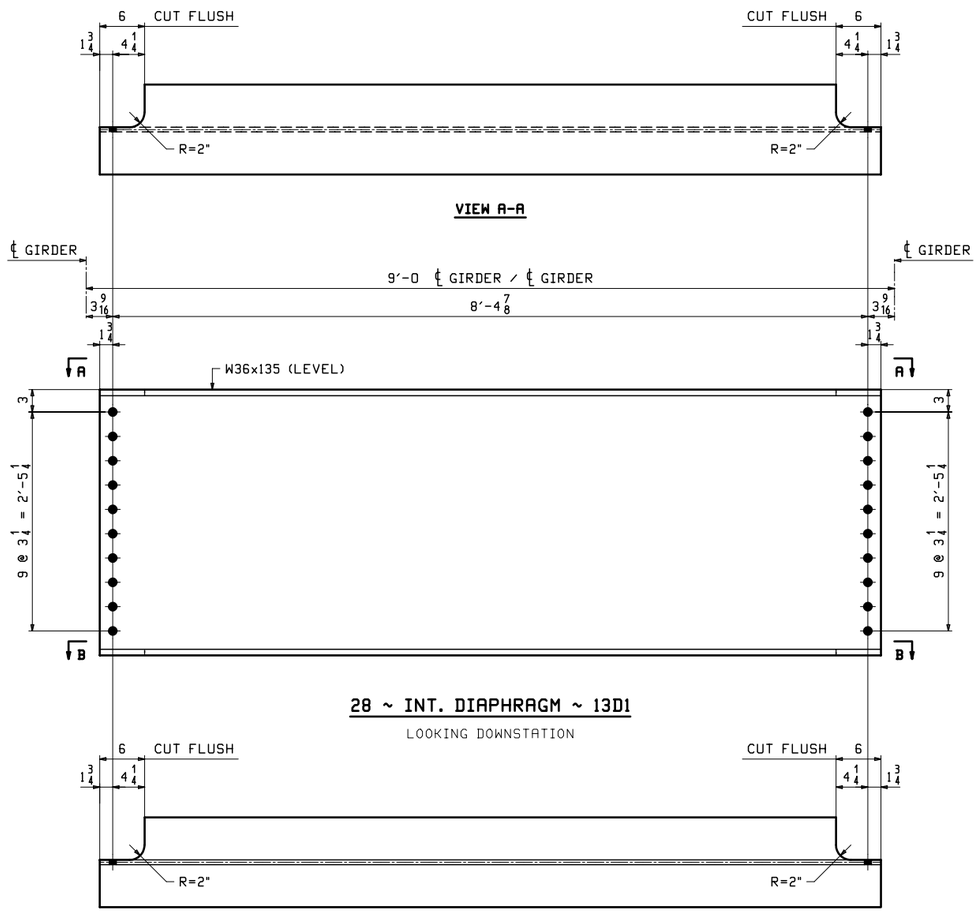

Vermont Agency of Transportation
RECEIVED
CK'D BY GML/JWC OK'D BY GG
March 6, 2013
RESUBMIT Approved
BY KMH DATE 03/18/13

NOTES:
1. FOR GENERAL NOTES SEE DRAWING GN1.
2. T2 - DENOTES CHARPY V-NOTCH TESTING REQUIRED.

REV.	DATE	REMARKS	DWN	CHK	APVL	SHOP
0						

MATERIAL:	SURFACE PREP. & PAINT:	HOLES:	SHOP BOLTS:
M270-50W	SEE GN1	15/16"ø	NONE

DESCRIPTION: INT. DIAPHRAGMS

CASCO BAY STEEL STRUCTURES, INC.
1 WALLACE AVE. PHONE (207) 780-6722
SOUTH PORTLAND, ME 04106 FAX. (207) 780-6726
TENSOR 3161

STRUCTURE:	VT 100 OVER WARDSBORO BROOK BRIDGE NO 78 WINDHAM COUNTY	DRAWN: EEO	DATE: 02/04
		CHKD: DBH	DATE: 02/27
LOCATION:	TOWN OF JAMAICA, VT	JOB NO.	DWG NO.
PROJ NO.	ER-BRF 013-1(16)	529-1	13
CUSTOMER:	T. BUCK CONSTRUCTION		REV. △

EEO Fri, Mar 1, 2013 08:50:48 AM /users/jobs/3161/13 - Rev0

ABM INFO		SHIP	BILL OF MATERIAL					JOB NO.	DRAWING NO.	REV.
								529-1	14	
PAGE	LINE	MARK	QTY	MARK	MATERIAL	LENGTH FT	LENGTH INCHES	REMARKS	WT	PROCUREMENT NOTES
		14AB1	16		ANCHOR BOLT ASSEMBLY				28	
3	B		16	a14	2 ø ROD	2	11	THRD = 13-1/2" A449	14	
3	C		48	b14	2 ø HHN			A563	3	
3	D		32	c14	PL $\frac{3}{8}$×5	0	5	M270-50W	3	
					LEVELING PLATE					
3	E	14LP1	8		PL $1\frac{1}{4}$×6	1	4	M270-50W	34	

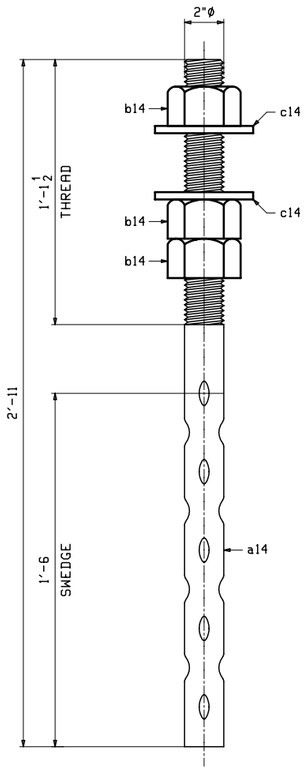

16 ~ ANCHOR BOLTS ~ 14AB1

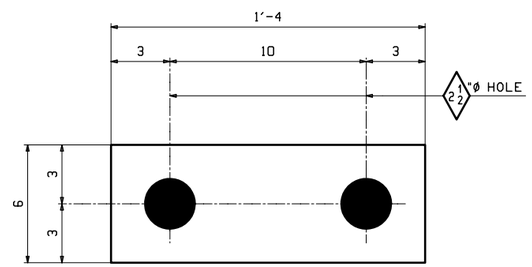

8 ~ LEVELING PLATE ~ 14LP1

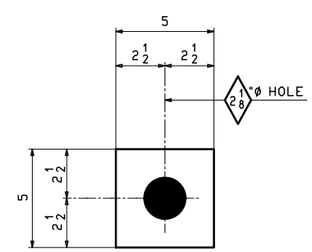

32 ~ PLATE WASHER ~ c14

Vermont Agency of Transportation
RECEIVED
Steel Shop Drawings.pdf
CK'D BY GML/JWC OK'D BY GG
March 6, 2013
RESUBMIT Approved
BY KMH DATE 03/18/13

NOTES:
1. FOR GENERAL NOTES SEE DRAWING GN1.

REV.	DATE	REMARKS	DWN	CHK	APVL	SHOP
0						

MATERIAL:	SURFACE PREP. & PAINT:	HOLES:	SHOP BOLTS:
AS NOTED	NONE	AS NOTED	NONE

DESCRIPTION: ANCHOR BOLTS

CASCO BAY STEEL STRUCTURES, INC.
1 WALLACE AVE. PHONE (207) 780-6722
SOUTH PORTLAND, ME 04106 FAX. (207) 780-6726
TENSOR 3161

STRUCTURE:	VT 100 OVER WARDSBORO BROOK BRIDGE NO 78 WINDHAM COUNTY	DRAWN: EEO	DATE: 02/27
		CHKD: DBH	DATE: 02/27
LOCATION:	TOWN OF JAMAICA, VT	JOB NO.	DWG NO.
PROJ NO.	ER-BRF 013-1(16)	529-1	14
CUSTOMER:	T. BUCK CONSTRUCTION		REV. △

EEO Thu, Feb 28, 2013 04:04:45 PM /users/jobs/361/14 Rev0